https://truckmanualshub.com/

STC250

STC250 TRUCK CRANE
25T LIFTING CAPACITY

Quality Changes the World

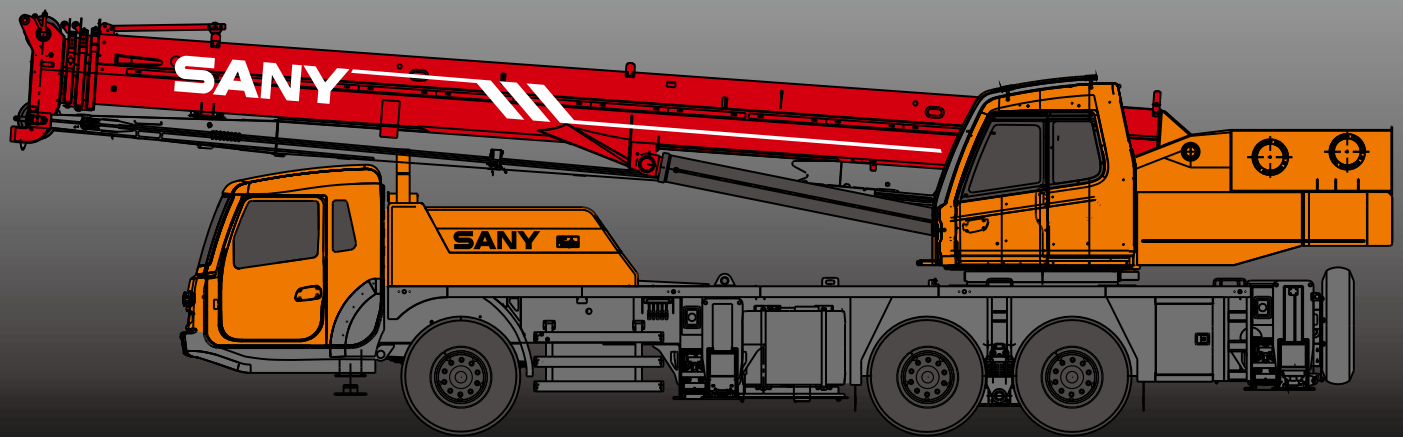

SANY

https://truckmanualshub.com/

COMPANY BRIFE INTRODUCTION

SANY Automobile Hoisting Machinery is one of the core business unit of Sany Heavy Industry, mainly engaged in the research and development of high end, mid to large tonnage crane series, including mobile crane, crawler crane, tower crane and loader crane. It has two industrial parks in Ningxiang and Huzhou, since entering the market, the products of Sany Automobile Hoisting Machinery have received worldwide recognition with advanced technology, lean manufacturing, high reliability and excellent service.

https://truckmanualshub.com/

https://truckmanualshub.com/

SANY TRUCK CRANE

CONTENT

04 Icon
05 Selling Points
06 Introduction
09 Dimension
10 Technical Parameter
11 Operation Condition
12 Load Chart
14 Wheel Crane Family Map

Cab

Hydraulic system

Control system

Telescopic system

Luffing system

Slewing

Counterweight

Safety system

Hoist system

Carrier frame

Outriggers

Engine

Transmission system

Drive/Steer

Axles

Tyres

Brakes system

Electrical system

Suspension system

Telescopic boom

Lattice jibs

Superlift devices

Luffing lattice jib

winch mechanism:

https://truckmanualshub.com/

Excellent and stable chassis performance / chassis system

Double-axle drive is used, providing good tafficability and comfortableness under complex road condition with reliable traveling performance.
Engine has the multimode power output function, which reduces power consumption.
The use of tipping over early-warning technology provides high stability and safety of the overall operation.

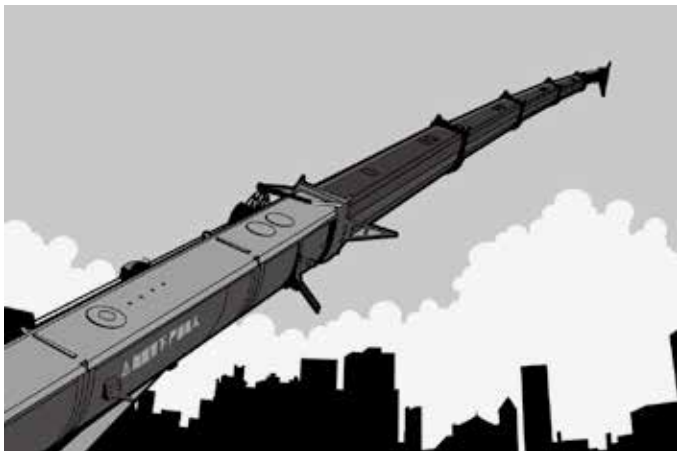

Ultra long, super strong and highly sensitive load lifting capacity

Four-section boom of high strength steel structure and optimized U-shaped cross section reduces weight significantly with higher safety rates. Jib mounting angles are 5°, 17°, and 30° which ensures fast and convenient change-over between different operating conditions so as to improving working efficiency of the machine.

Highly efficient, stable, energy-saving and adjustable hydraulic system

Triple gear pump, load feedback and constant power control are applied to provide strong lifting capacity and good micro-mobility. Unique steering buffer design is applied to ensure stable braking operation.

Safe, stable, advanced, and intelligent electric control system

Self-developed controller SYMC specially for engineering machinery is configured. The adoption of CAN- bus full-digital network control technology ensures stable control signal, simple harness and high reliability. Timely feedback of data information can achieve the monitoring of the overall working status in real-time. The load moment limiter equipped with the comprehensive intelligent protection system is used with accuracy within 3% to provide a comprehensive logic and interlock control, thus ensuring more safe and reliable operation.

https://truckmanualshub.com/

Superstructure

Cab

- It is made of safety glass and anti-corrosion steel plate with ergonomic design such as full-coverage soften interior, panoramic sunroof and adjustable seats etc., and humanized design providing more comfortable and relaxing operation experience. The display of load moment limiter integrates main console and operation display system, which clearly show the data of all operating superstructure conditions for lifting operation.

Hydraulic system

- High-quality key hydraulic components such as main oil pump, rotary pump, main valve, winch motor, and balancing parts etc. are adopted to achieve stable and reliable operation of the hydraulic system. Superior operation performance is guaranteed by accurate parameter matching.
- Main valve has flow compensation, load feedback control function, enabling stable and convenient control of single action and combined action under different operation conditions.
- Winch adopts the variable motor to ensure high operation efficiency. Max. single line speeds of main and auxiliary winches is up to 120m/min which ensures the lifting efficiency take the lead in industry.
- The use of new slewing system ensures more stable starting and control of the slewing operation and excellent micro-mobility.
- Hydraulic oil tank capacity: 480L

Control system

- CAN-bus instrument: CAN-bus instrument with a combined intelligent control electrical system is used for easy reading of the traveling parameters at any time. The engine fault warning function is applied, to ensure convenient and fast troubleshooting.
- Load moment limiter: The adoption of high intelligent load moment limiter system can
- comprehensively protect lifting operation, ensuring accurate, stable and comfort operation.
- With fully security protection system, main and auxiliary winches are equipped with over-roll out limiter and height limiters to prevent over-rolling out and over-hoisting of steel rope, including tip-over and limit angle protection.

Luffing system

- Dead-weight luffing provides more stable luffing operation at low energy loss.
- Luffing angle: -2°~ 80°.

Telescopic system

- Four-section boom is applied with basic boom length of 10.65m, fully extended boom length of 33.5m, jib length of 8m and lifting height of fully extended boom length of 34m respectively. Max. lifting height is 42m including jib.
- It is made of fine grain high-strength steel with U-shaped cross section and with telescopic operation controlled independent by single- cylinder rope.

https://truckmanualshub.com/

Superstructure

Slewing system

- 360° rotation can be achieved with Max. slewing speed of 2.2r/min., providing stable and reliable operation of the system. Single-row ball slewing ring is applied for strong bearing capacity, good stability, high safety and good micro-mobility.

Hoisting system

- The winch adopts the high-pressure automatic variable plunger motor, enabling automatic switch-over between low load high speed mode and high load low speed mode, and ensuring highly efficient operation and stable lifting and lowering of the load.
- One main hook: 320Kg, one auxiliary hook: 90Kg. Wire rope of main winch: left-handed wire rope 16-35W×7-1960USS, with length of 175m. Wire rope of auxiliary winch: left-handed wire rope 16-35W×7-1960USS, with length of 105m.

Safety system

- Load moment limiter: Load moment limiter calculation system based on lifting load mechanical model is established using an analytical mechanics method, with rated lifting accuracy up to ±3% through on-line non-load calibration, providing full protection to lifting operation. In case of overload operation, system will automatically issue an alarm to provide safety protection for manipulation.
- Hydraulic system is configured with the balance valve, overflow valve, and two-way hydraulic lock etc. components, thus achieving the stable and reliable operation of the hydraulic system;
- Main and auxiliary winches are equipped with over roll-out limiter to prevent over rolling-out of wire rope.
- Boom and jib ends are equipped with height limiters respectively to prevent over-hoisting of wire rope.
- Boom head is equipped with anemometer and press sensor to indicate the working condition of whole crane in real-time, giving an alarm and cutting off the dangerous action automatically.

Counterweight

- Counterweight is 3800kg, no movable counterweight.

https://truckmanualshub.com/

Chassis

Driving cab	■ Cab is made of new steel structure self-developed by SANY, featuring excellent shock absorption and tightness, which is configured with swing-out doors at both sides, pneumatically suspended driver's seat and passenger seat, adjustable steering wheel, large rearview mirror, comfort driver chair having a headrest, anti-fog fan, air conditioner, stereo radio and complete control instruments and meters, providing more comfortable, safe and humanized operation experience.
Carrier frame	■ Designed and manufactured by SANY, anti-torsion box structure is welded by fine-grain high-strength steel plate to provide strong load bearing capacity.
Axles	■ Axles 2 and 3 are drive axles and axles 1 is steering axles, axle and wheel differentials are installed in axles 2 and 3.The use of welding process for axle housing provides stronger load bearing capacity.
Engine	■ Type: Inline six-cylinder, water cooled, supercharged and inter-cooling diesel engine ■ Rated power: 213kW(340ps)/2100(r/min) ■ Environment-protection: Emission complies with EuroIII standard ■ Capacity of fuel tank: 300L
Transmission system	■ Gearbox: Manual / Automatic gearbox is adopted with 9-gear and large speed ratio range applied, which meets the requirements of low gradeability speed and high traveling speed. ■ Transmission shaft: With optimized arrangement of the transmission shaft, the transmission is stable and reliable. For most optimized transmission, face-tooth coupling transmission shaft is used with large transmission torque.
Brakes system	■ Brakes system includes traveling brake and parking brake. ■ All wheels use the air servo brakes and dual-circuit brake system, engine is equipped with an exhaust brake.
Suspension system	■ All axles adopt the plate spring suspension systems with plate spring passed 100,000 fatigue tests and with optimization of performance parameters of the front and rear plate springs applied to ensure strength and also to provide comfort ridding.
Steering system	■ Hydraulic power mechanical steering systems are applied for axles 1 with unloading valve installed in the steering gear.
Outriggers	■ Four-point supporting of the H-shaped outriggers ensures easy operation and strong stability, with Max. span up to 5.3m×6.2m.They are made of fine-grain high-strength steel sheet, movable outriggers are all hydraulic transverse telescopic.
Tyres	■ 11 (number of tyres) - type:12R22.5; bias tires are used, featuring with large bearing capacity and durable use.
Electrical system	■ With 2*12V maintenance-free batteries, the crane power can be cut off manually via a mechanical master power switch.

https://truckmanualshub.com/

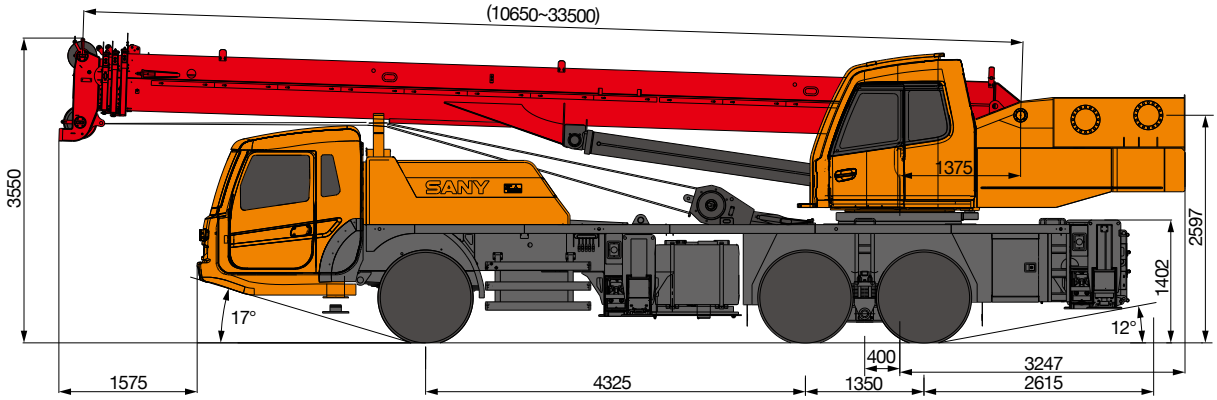

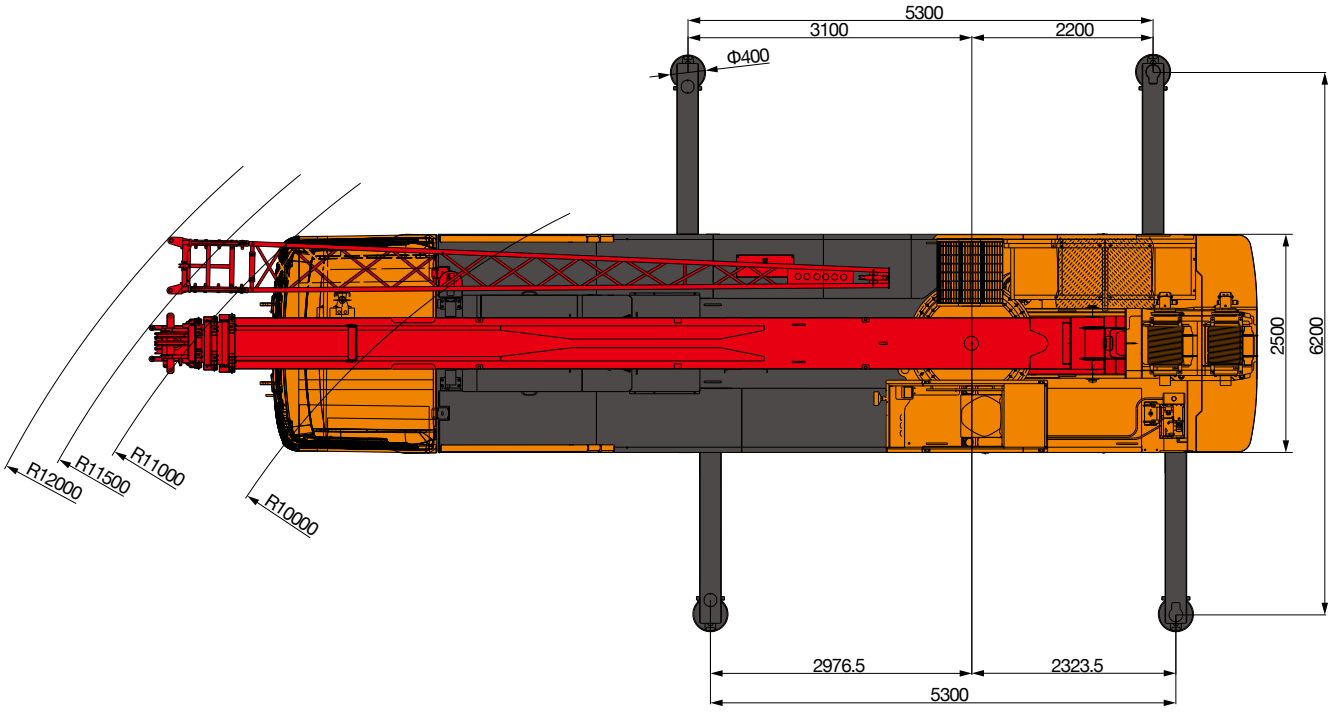

https://truckmanualshub.com/

STC250 TRUCK CRANE

TECHNICAL PARAMETER

Type	Item		Parameter
Capacity	Max. lifting capacity		25t
Dimensions	Overall length		12750mm
	Overall width		2500mm
	Overall height		3550mm
	Axle distance		4325mm/1350mm
Weight	Overall weight		30000kg
	Axle load	Axle 1	6500kg
		Axle 2,3	23500kg
Engine	Rated power		213kW/2100(r/min)
	Rated torque		1050N.m/(1200~1400)rpm
Traveling	Max.traveling speed		80Km/h
	Turning radius	Min.turning radius	10m
	Min.ground clearance		220mm
	Approach angle		17°
	Departure angle		12°
	Max.gradeability		38%
	Fuel consumption per		37L
Main performance parameters	Min.rated range		3m
	Tail slewing radius of swingtable		3.37m
	Boom section		4
	Boom shape		U-shaped
	Max.lifting moment	Base boom	962kN.m
		Full-extend boom	544kN.m
		Full-extend boom+jib	341kN.m
	Boom length	Base boom	10.65m
		Full-extend boom	33.5m
		Full-extend boom+jib	41.5m
	Outrigger span (Longitudinal×Transversal)		5.3m×6.2m
Working speed	Max.single rope lifting speed of main winch (no load)		120m/min
	Max.single rope lifting speed of auxiliary winch (no load)		120m/min
	Full extension/retraction time of boom		95s/60s
	Full lifting/descending time of boom		45s/60s
	Slewing speed		2.2r/min
Air condition	Superstructure		Cooling and heating
	Chassis		Cooling and heating

https://truckmanualshub.com/

STC250 Working Ranges

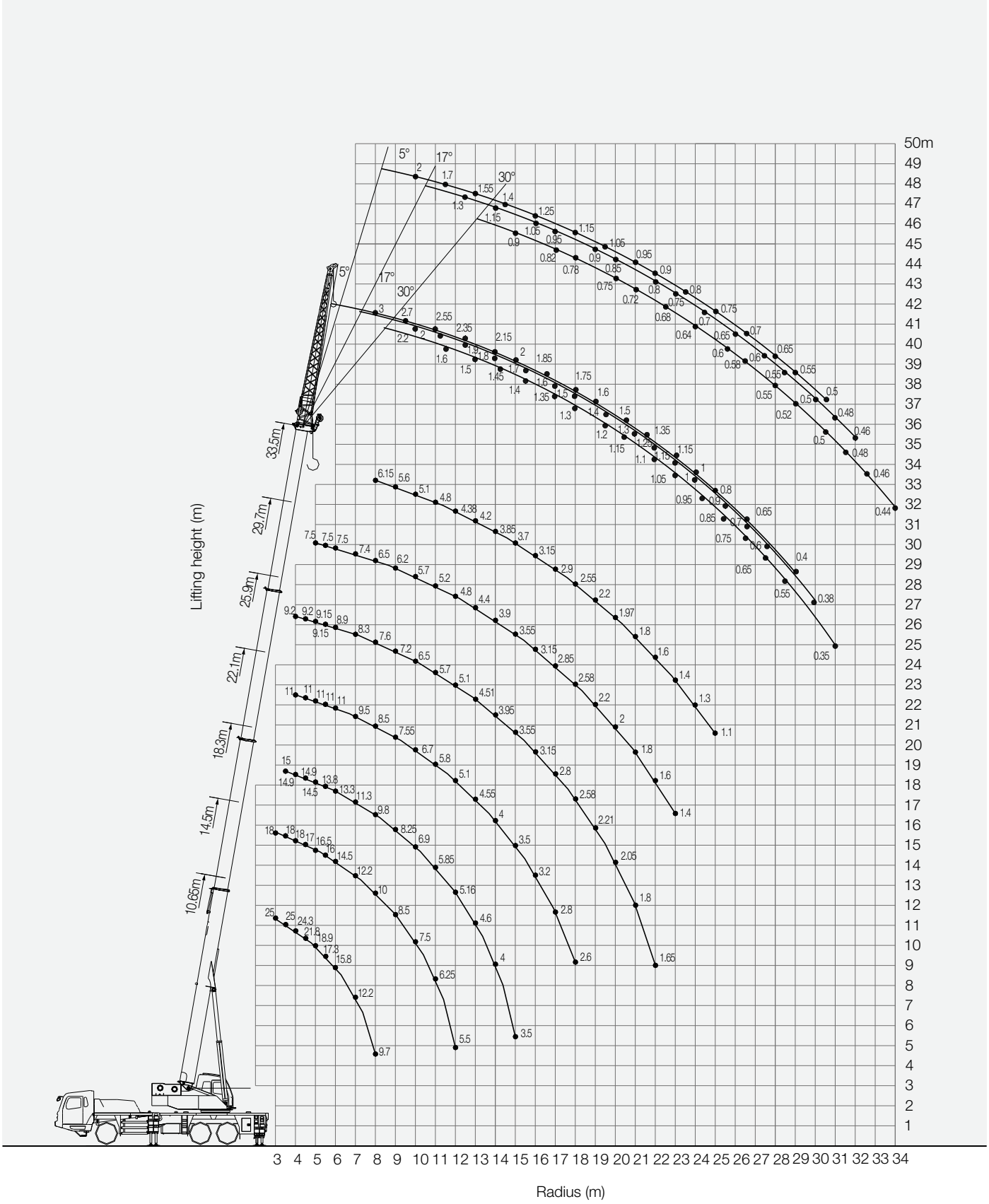

https://truckmanualshub.com/

STC250 TRUCK CRANE

LOAD CHART

Unit:Kg

Prerequisites：
① Boom operation condition(boom operation condition(full telescopic boom length/full telescopic boom+jib) 10.65 m the shortest 33.5 m the longest
② Outriggers length 6.2 m
③ 360° rotation
④ weight of counterweight 3.8 T

Working range(m)	Main boom							Working range(m)
	10.65	14.5	18.3	22.1	25.9	29.7	33.5	
3	25000	18000						3
3.5	25000	18000	15000					3.5
4	24300	18000	14900	11000	9200			4
4.5	21820	17000	14900	11000	9200			4.5
5	18900	16500	14500	11000	9150	7500		5
5.5	17350	16000	13800	11000	9150	7500		5.5
6	15800	14500	13300	11000	8900	7500		6
7	12200	12200	11300	9500	8300	7400		7
8	9700	10000	9800	8500	7600	6500	6150	8
9		8500	8250	7550	7200	6200	5600	9
10		7500	6900	6700	6500	5700	5100	10
11		6250	5850	5800	5700	5200	4800	11
12		5500	5160	5100	5100	4800	4380	12
13			4600	4550	4510	4400	4200	13
14			4000	4000	3950	3900	3850	14
15			3500	3500	3550	3550	3700	15
16				3200	3150	3150	3150	16
17				2800	2800	2850	2900	17
18				2600	2580	2580	2550	18
19					2210	2200	2200	19
20					2050	2000	1970	20
21					1800	1800	1800	21
22					1650	1600	1600	22
23						1400	1400	23
24							1300	24
25							1100	25
Number of lines	8	8	6	4	4	4	3	Number of lines
Telescoping condition(%)								
I	100%	100%	100%	100%	100%	100%	100%	I
II	0	17%	34%	50%	67%	84%	100%	II
III	0	17%	34%	50%	67%	84%	100%	III
IV	0	17%	34%	50%	67%	84%	100%	IV

1. Values listed in the table refer to rated lifting capacity measured at flat and solid gound under the lever state of the crane;
2. Value above heavy line shall be determined by strength of the crane and under this line shall be determined by stability of the crane;
3. Rated load values determined by stability shall comply with ISO 4305;
4. Rated lifting capacity listed in the table included weights of lifting hooks (320kg of main hook and 90kg of auxiliary hook)and hangers;
5. Rated lifting capacity with pulley at boom tip shall not exceed 3500kg
6. If actual boom length and range are between two values specified in the table, larger value will determine the lifting capacity.

https://truckmanualshub.com/

Unit:Kg

Load Chart
(33.5m boom + 9/14.6m jib, outrigger fully-extended, 3.8t counterweight, 360°rotation)

Boom angle (°)	Boom+Jib					
	33.5m+9m			33.5m+14.6m		
	Jib offset angle (°)					
	5°	17°	30°	5°	17°	30°
78°	3000	2200	1600	2000	1300	900
76°	2700	2000	1500	1700	1150	820
74°	2550	1900	1450	1550	1050	780
72°	2350	1800	1400	1400	950	750
70°	2150	1700	1350	1250	900	720
68°	2000	1600	1300	1150	850	680
66°	1850	1500	1200	1050	800	640
64°	1750	1400	1150	950	750	600
62°	1600	1300	1100	900	700	580
60°	1500	1250	1050	800	650	550
58°	1350	1150	950	750	600	520
56°	1150	1000	850	700	550	500
54°	1000	900	750	650	500	480
52°	800	700	650	550	480	460
50°	650	600	550	500	460	440
45°	400	380	350			

https://truckmanualshub.com/

Quality Changes the World

SANY AUTOMOBILE HOISTING MACHINERY

Address: SANY Industrial Park, Jinzhou Development Zone,
Changsha, Hunan, China.
Service Hotline: 4006098318
Email: crd@sany.com.cn
For more information, please visit: www.sanygroup.com

For our consistent improvement in techonology, specifications may change without notice.
The machines illustrated may show optional equipment which can be supplied at additional cost.

Version: 2020.4

Distributed By: