https://truckmanualshub.com/

Yanmar 4TNV98-ZNMS 4TNV98T-ZNMS 4TNV98-ZNTBL 4TNV98T-ZNTBL Engines

(P/N's 192809, 192808, 242474, 241451, 196108, 196340)

Mustang 2066/76/86, 2700V and Gehl 56/6640E, V270 Skid-Steer Loaders

Gehl CTL65/75 and Mustang MTL316/320 Compact Track Loaders

Form No. 917304

Revision C 07/09

ENGINE PARTS MANUAL

https://truckmanualshub.com/

Introduction

This manual covers the Yanmar 4TNV98-ZNMS (and Turbocharged version) and 4TNV98-ZNTBL (and Turbocharged version) engines with the following part numbers:

Part Number 192809: Mustang 2066 (naturally-aspirated)

Part Number 192808: Mustang 2076 and 2086 (turbocharged)

Part Number 242474: Mustang 2066 (naturally-aspirated)

Part Number 241451: Mustang 2076/2086/2700V and Gehl 5640E/6640E/V270 (turbocharged)

Part Number 196108: Gehl CTL65 and Mustang MTL316 (naturally-aspirated)

Part Number 196340: Gehl CTL75 and Mustang MTL320 (turbocharged)

When ordering service parts, specify the correct part number, full description, quantity required, and the engine model number and serial number.

Items shown that do not have a part number are shown for reference purposes only and are not available for purchase. Part numbers may change. Your Gehl or Mustang dealer will have the latest part number.

Gehl® Company and the Mustang® Manufacturing Co., Inc., reserve the right to make changes or improvements in the design or construction of any part of the unit without incurring the obligation to install such changes on any previously delivered units.

IMPORTANT

For maximum engine life, when shutting the engine down, allow the engine to idle, without load, for five minutes. This will allow engine components that operate at high temperatures to cool slightly before the engine itself is shut down.

GEHL is a registered trademark of the Gehl Company.

MUSTANG is a registered trademark of the Mustang Manufacturing Co., Inc.

https://truckmanualshub.com/

TABLE OF CONTENTS

DESCRIPTION	PAGE

ENGINE SERVICE PARTS

Cylinder Block 1
Gear Housing 3
Flywheel Housing and Oil Sump 5
Cylinder Head and Bonnet 7
Suction Manifold 13
Exhaust Manifold and Silencer 17
Camshaft and Driving Gear 21
Crankshaft and Piston. 23
Lubrication Oil System 25
Cooling Water System 31
Fuel Injection Pump 35
Governor. 37
Fuel Injection Valve 39
Fuel Line. 41
Starting Motor 43
Electric Parts. 45
Tool and Gasket Set 47
Turbine (Turbocharged) 51
Lubrication Oil Line (Turbocharged). 53
Generator (-ZNTBL engine) 55

Numerical Index 58

https://truckmanualshub.com/

CYLINDER BLOCK

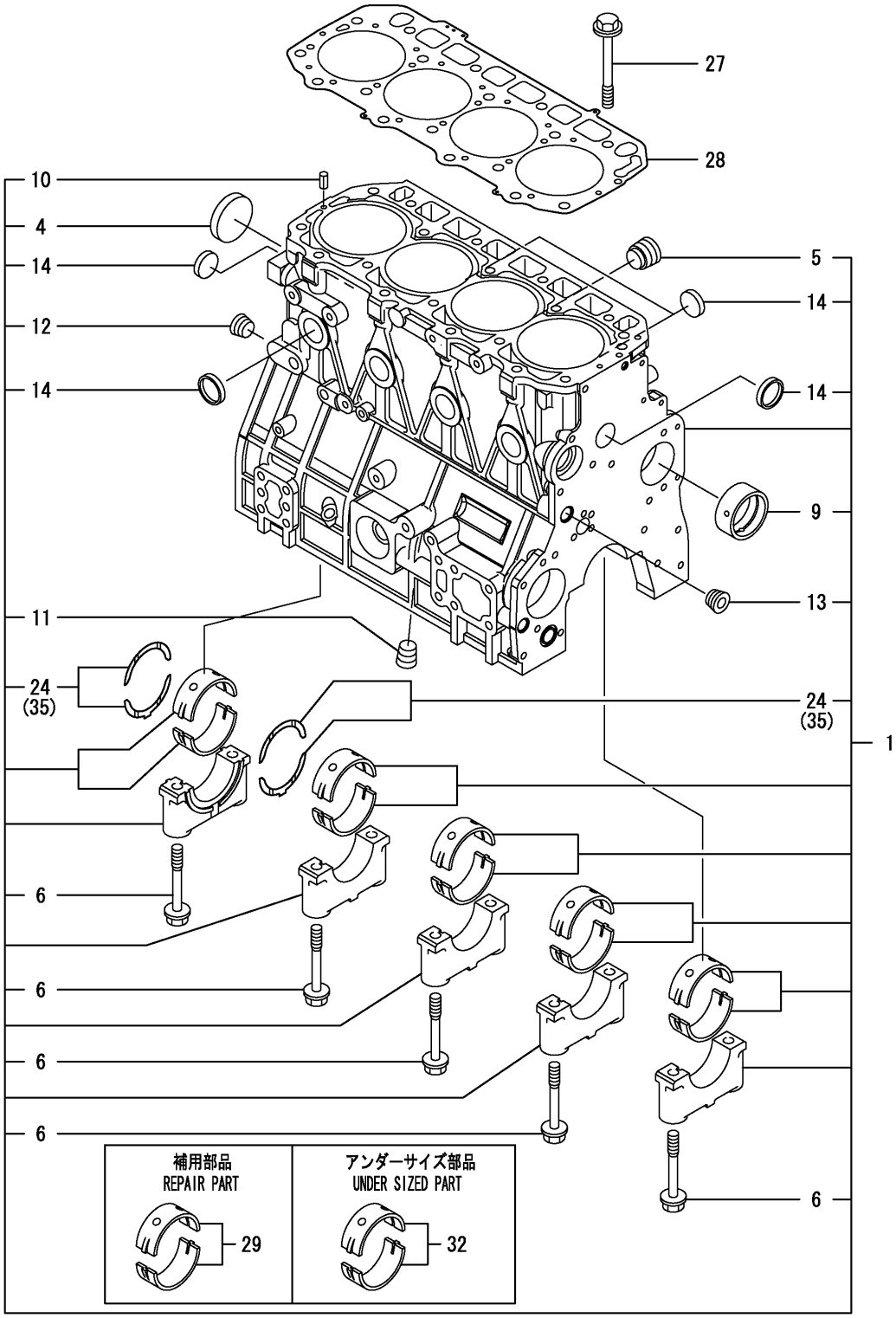

Y00W2680	1, CYLINDER BLOCK				
4TNV98-ZNMS		1, 07/12	2	3	PLUS

https://truckmanualshub.com/

CYLINDER BLOCK

Ref. No.	Part No.	Description	Quantity 4TNV98
1	197827	BLOCK ASSY, CYLINDER (ZNMS AND ZNTBL)	1
	197831	BLOCK ASSY, CYLINDER (T-ZNMS AND T-ZNTBL)	1
4	186486	PLUG 55	1
5	425-34722	PLUG	1
6	186491	BOLT, METAL CAP	10
9	186493	BUSH, CAMSHAFT	1
10	425-34783	SPRING PIN 6X12	2
11	425-36260	PLUG PT3/8,SCREW	1
12	425-36260	PLUG PT3/8,SCREW	1
13	425-36260	PLUG PT3/8,SCREW	1
14	188757	PLUG 30	8
24	186494	BEARING ASSY, THRUST	2
27	186485	BOLT, HEAD	18
28	186513	GASKET,CYLINDER HEAD	1
29	186635	MAIN BEARING SET	5
32	197591	MAIN BEARING US=0.25	5
35	197592	BEARING,THRUST .25OS	2

https://truckmanualshub.com/

GEAR HOUSING

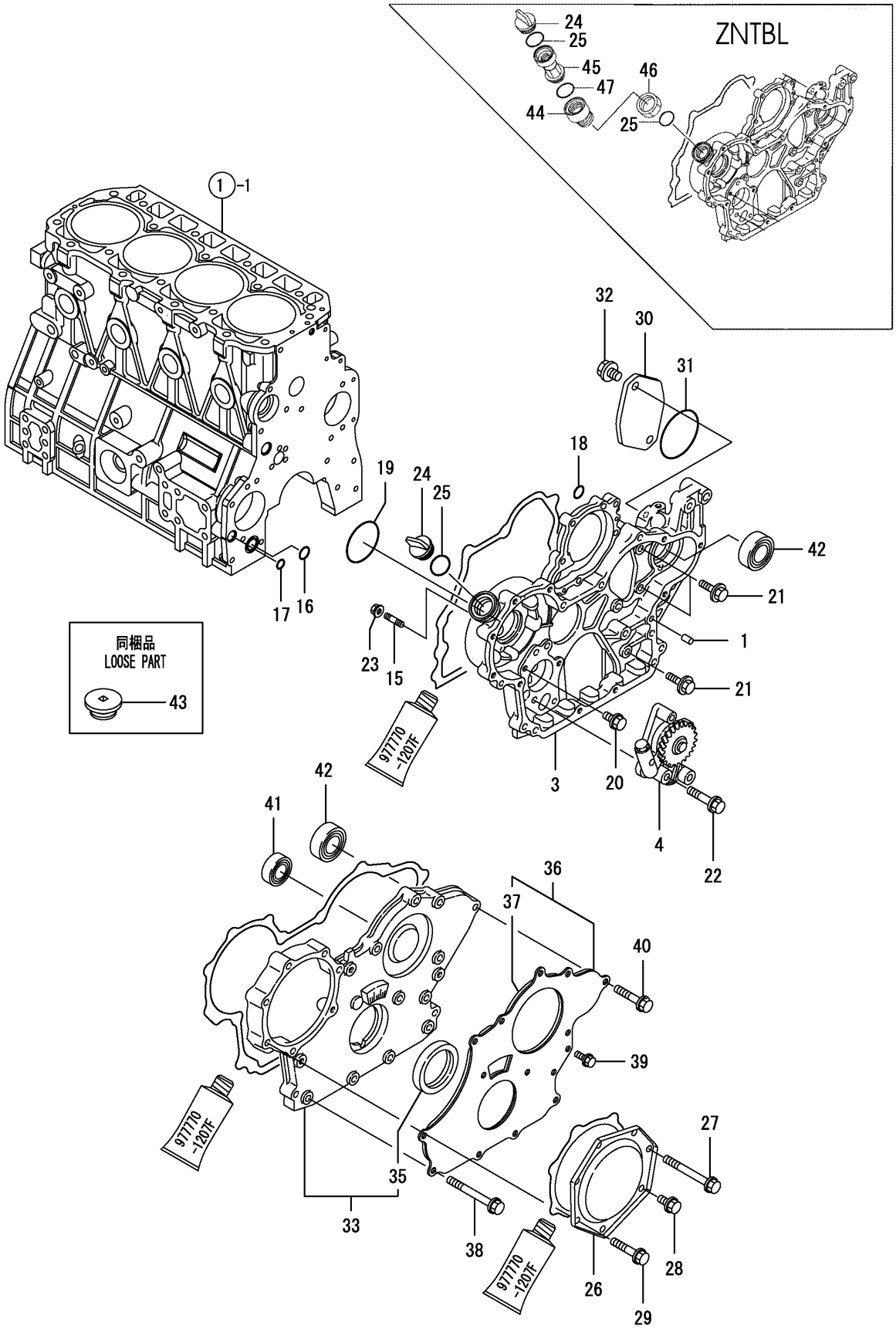

Y00W2680	2, GEAR HOUSING			
4TNV98-ZNMS	1, 07/12	2	3	PLUS

https://truckmanualshub.com/

GEAR HOUSING

Ref. No.	Part No.	Description	Quantity 4TNV98
1	188573	PARALLEL PIN 8X16	4
3	186586	CASE, GEAR (ZNMS AND ZNTBL)	1
	197697	HOUSING,GEARS (T-ZNMS AND T-ZNTBL)	1
4	186543	PUMP ASSY, LUB.OIL (ZNMS AND ZNTBL)	1
	197614	PUMP ASSY, LUB.OIL (T-ZNMS AND T-ZNTBL)	1
15	138139	STUD BOLT	4
16	138100	O-RING P20	1
17	138101	O-RING P14	1
18	186607	O-RING 1A P-7.0	1
19	186612	PACKING, 3075	1
20	425-34733	BOLT M 8X 16 PLATED	1
21	425-34746	BOLT M 8X 20 PLATED	3
22	425-34747	BOLT M 8X 45 PLATED	3
23	138141	NUT	4
24	425-34740	COVER,FILLER	1
25	425-34745	O-RING 1A P-32.0	1
26	186487	COVER, F.I. PUMP	1
27	186466	BOLT M 8X 70 PLATED	1
28	425-34733	BOLT M 8X 16 PLATED	1
29	188742	BOLT M 8X 40 PLATED	5
30	137948	COVER, HO-P	1
31	138127	O-RING 1A G-85.0	1
32	138133	BOLT M10X 20 PLATED	2
33	197826	HOUSING ASSY,COVER,G	1
35	186664	SEAL, OIL	1
36	186489	COVER ASSY	1
37	186490	SPONGE	1
38	186466	BOLT M 8X 70 PLATED	6
39	425-34733	BOLT M 8X 16 PLATED	3
40	188742	BOLT M 8X 40 PLATED	5
41	197593	BEARING #6205	1
42	186507	BALL BEARING	2
43	137947	CAP, LUB.OIL SUPPLY	1
44	185643	ADAPTOR, OIL FILLER (ZNTBL AND T-ZNTBL)	1
45	137949	PIPE (ZNTBL AND T-ZNTBL)	1
46	185644	NUT, OIL FILLER (ZNTBL AND T-ZNTBL)	1
47	185645	O-RING 1A P-30.0 ZNTBL AND T-ZNTBL)	1

https://truckmanualshub.com/

FLYWHEEL HOUSING AND OIL SUMP

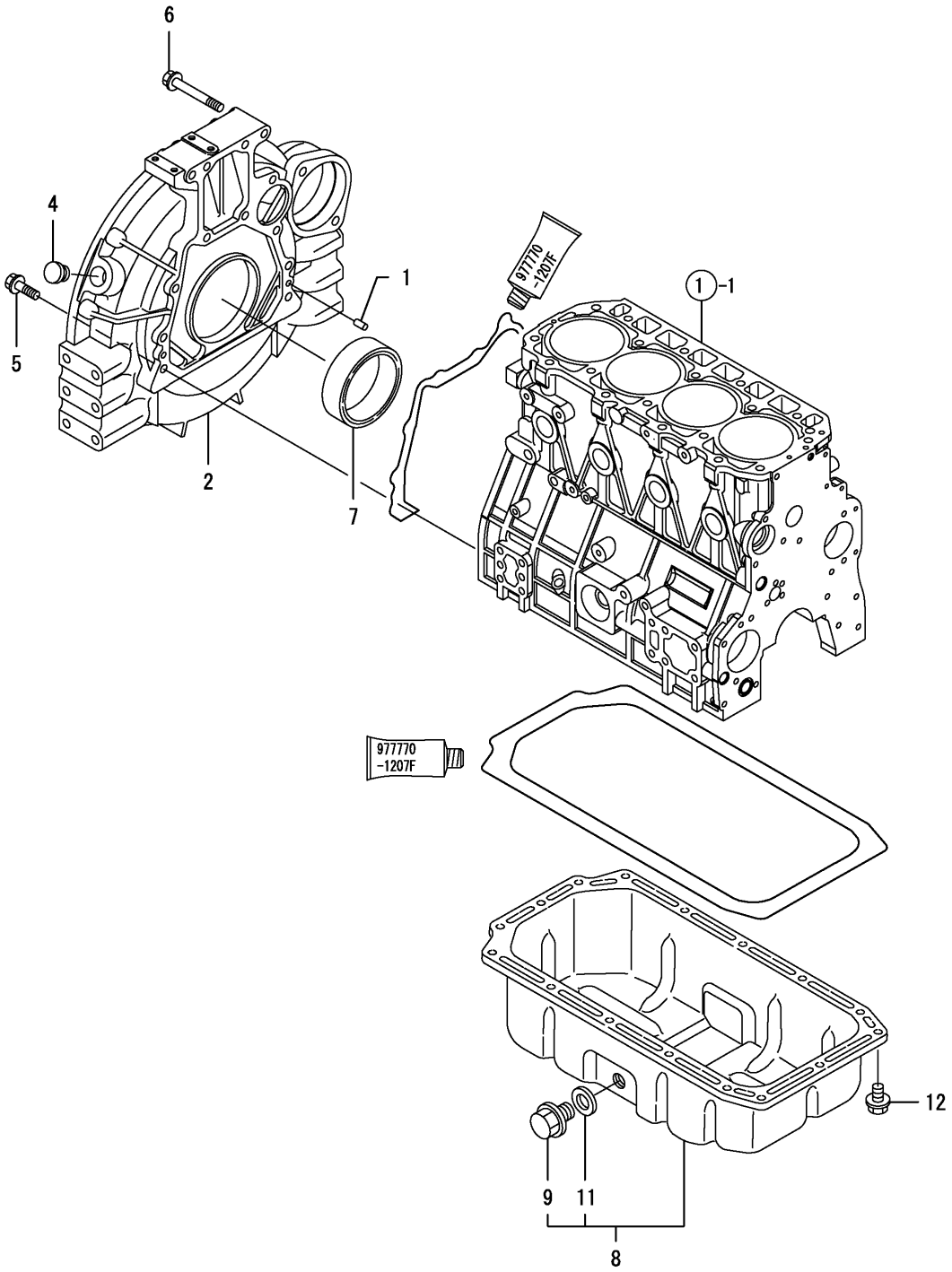

Y00W2680	3, FLYWHEEL HOUSING & OIL SUMP				
4TNV98-ZNMS		1, 07/12	2	3	PLUS

https://truckmanualshub.com/

FLYWHEEL HOUSING AND OIL SUMP

Ref. No.	Part No.	Description	Quantity 4TNV98
1	188573	PARALLEL PIN 8X16	2
2	197590	COVER ASSY,FLYWHEEL (ZNMS AND T-ZNMS)	1
	186576	HOUSING, FLYWHEEL (ZNTBL AND T-ZNTBL)	1
4	425-34756	CAP, FLYWHEEL COVER	1
5	186622	BOLT M10X 35 PLATED	9
6	186623	BOLT M10X 70 PLATED	4
7	197620	SEAL, OIL	1
8	197753	PAN ASSY, LUB. OIL (ZNMS)	1
	197470	SUMP ASSY, LUB.OIL (T-ZNMS)	1
	425-36120	SUMP ASSY, OIL (ZNTBL)	1
	197664	SUMP ASSY, OIL (T-ZNTBL)	1
9	425-36121	DRAIN PLUG M22	1
11	138113	SEAL WASHER 22S	1
12	425-34729	BOLT M 8X 12 PLATED	16

https://truckmanualshub.com/

ZNMS AND ZNTBL Engines

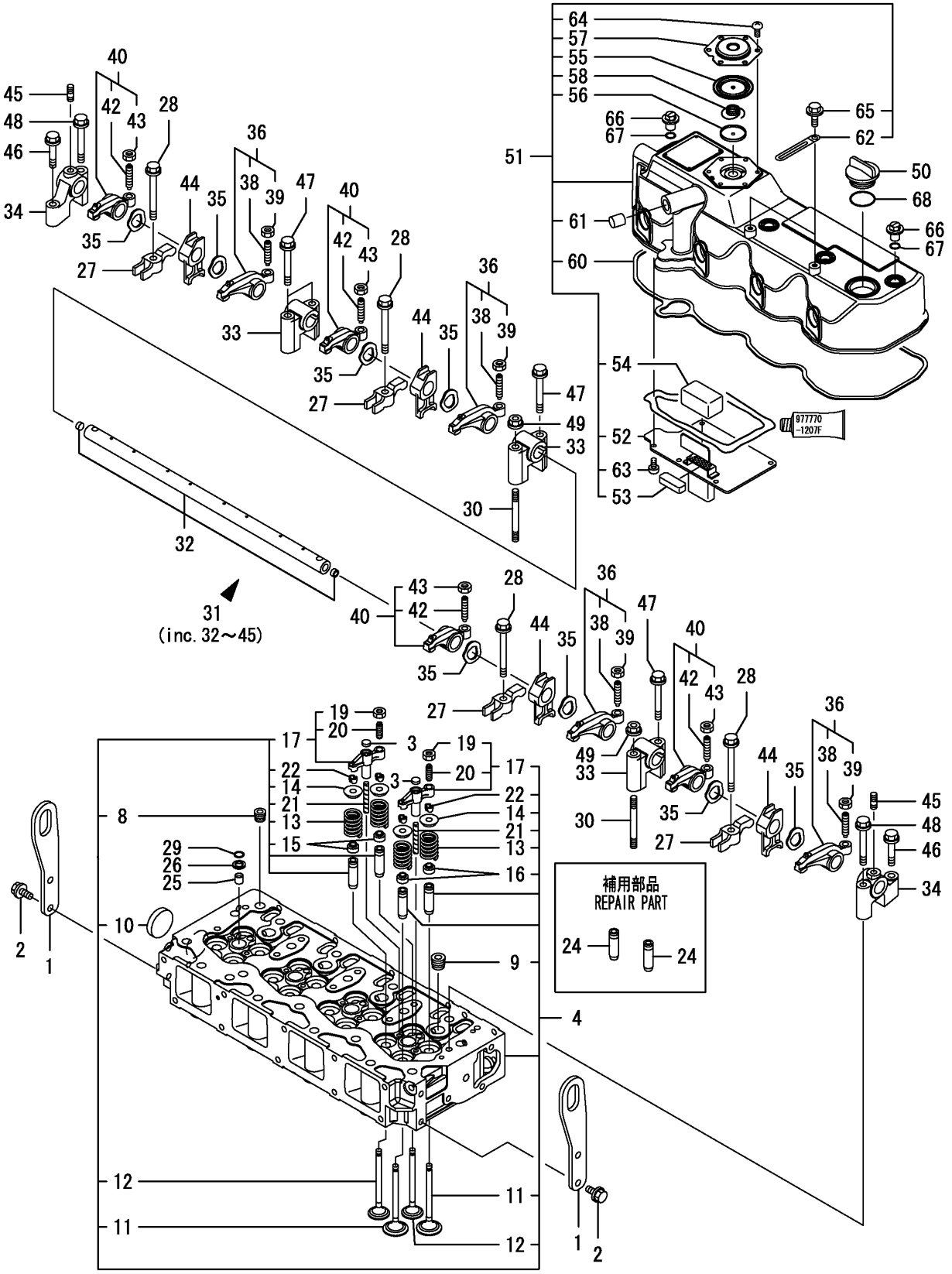

Y00W2680	4, CYLINDER HEAD & BONNET			
4TNV98-ZNMS	1, 07/12	2	3	PLUS

https://truckmanualshub.com/

CYLINDER HEAD AND BONNET

Ref. No.	Part No.	Description	Quantity ZNMS/ZNTBL
1	186519	LIFTER, ENGINE (ZNMS)	2
	186519	LIFTER, ENGINE (ZNTBL)	1
	197733	LIFTER,ENGINE (ZNTBL)	1
2	425-34733	BOLT M 8X 16 PLATED	4
3	186406	SEAT A,VALVE BRIDGE	8
4	197622	HEAD ASSY, CYLINDER	1
8	186602	PLUG PT1/4,SCREW	1
9	425-36260	PLUG PT3/8,SCREW	4
10	425-34779	PLUG 40	1
11	186520	VALVE(INT	8
12	186521	VALVE(EXH	8
13	186522	VALVE SPRING	16
14	425-35188	RETAINER, SPRING	16
15	197472	SEAL, VALVE STEM(EXH	8
16	425-35191	SEAL, VALVE STEM(INT	8
17	186529	BRIDGE ASSY,VALVE	8
19	425-34791	NUT M8XP1.0	8
20	186411	SCREW,VALVE BRIDGE	8
21	186410	GUIDE,VALVE BRIDGE	8
22	425-35189	COTTER ASSY	16
24	186533	GUIDE, VALVE	16
25	186337	PROTECTOR, NOZZLE	4
26	425-34796	SEAT, NOZZLE	4
27	186534	RETAINER,F.I.VALVE	4
28	197603	FLANGE BOLT,RETAINER	4
29	425-34776	O-RING 1A P 12.0	4
30	186314	BOLT 8X80	2
31	186528	SUPPORT CMP	1
32	186523	SHAFT,ROCKER ARM	1
33	186524	SUPPORT A	3
34	186525	SUPPORT B	2
35	186401	WAVE WASHER	8
36	186530	ARM ASSY, ROCKER	4
38	188596	SCREW, VALVE	4
39	425-34791	NUT M8XP1.0	4
40	186531	ARM ASSY, ROCKER	4
42	188596	SCREW, VALVE	4
43	425-34791	NUT M8XP1.0	4
44	186535	PEDESTAL,RETAINER	4
45	186624	STUD M 8X 22 PLATED	2
46	188742	BOLT M 8X 40 PLATED	2
47	188746	BOLT M 8X 60 PLATED	4
48	188746	BOLT M 8X 60 PLATED	2
49	138140	NUT	2
50	425-34740	COVER,FILLER	1
51	197621	BONNET ASSY	1
52	197601	BAFFLE PLATE	1
53	197602	BAFFLE	1
54	186518	BAFFLE	1
55	186388	DIAPHRAGM,BREATHER	1
56	186389	CENTER PLATE	1
57	186390	PLATE,BREATHER	1
58	186391	SPRING, DIAPHRAGM	1
60	197698	GASKET, BONNET	1
61	186335	PLUG	1
62	197779	CLIP	2
63	186598	SCREW 5X10,TAPPING	6
64	186598	SCREW 5X10,TAPPING	6
65	186615	BOLT M 6X 12 PLATED	2
66	425-34775	KNOB	4
67	425-34776	O-RING 1A P 12.0	4
68	425-34745	O-RING 1A P-32.0	1

https://truckmanualshub.com/

T-ZNMS and T-ZNTBL

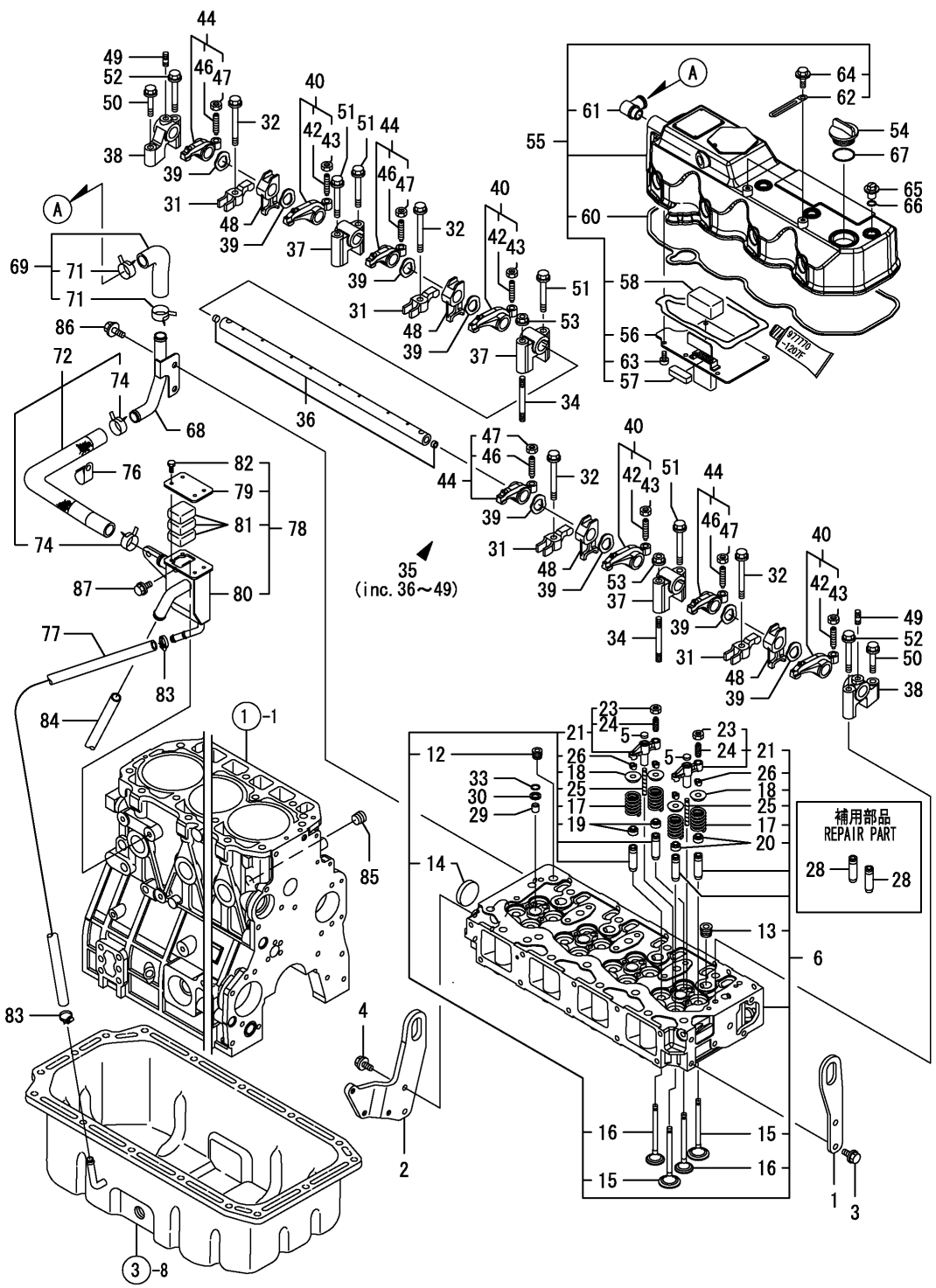

Y00W2670	4. CYLINDER HEAD & BONNET			
4TNV98T-ZNMS	1, 07/12	2	3	PLUS

https://truckmanualshub.com/

CYLINDER HEAD AND BONNET

Ref. No.	Part No.	Description	Quantity T-ZNMS/T-ZNTBL
1	186519	LIFTER, ENGINE	1
2	197668	LIFTER, ENGINE	1
3	425-34733	BOLT M 8X 16 PLATED	2
4	425-34746	BOLT M 8X 20 PLATED	2
5	186406	SEAT A,VALVE BRIDGE	8
6	197670	HEAD ASSY, CYLINDER	1
12	186602	PLUG PT1/4,SCREW	1
13	425-36260	PLUG PT3/8,SCREW	4
14	425-34779	PLUG 40	1
15	186520	VALVE(INT	8
16	186521	VALVE(EXH	8
17	186522	VALVE SPRING	16
18	425-35188	RETAINER, SPRING	16
19	197472	SEAL, VALVE STEM(EXH	8
20	425-35191	SEAL, VALVE STEM(INT	8
21	186529	BRIDGE ASSY,VALVE	8
23	425-34791	NUT M8XP1.0	8
24	186411	SCRWE,VALVE BRIDGE	8
25	186410	GUIDE,VALVE BRIDGE	8
26	425-35189	COTTER ASSY	16
28	186533	GUIDE, VALVE	16
29	186337	PROTECTOR, NOZZLE	4
30	425-34796	SEAT, NOZZLE	4
31	186534	RETAINER,F.I.VALVE	4
32	197603	FLANGE BOLT,RETAINER	4
33	425-34776	O-RING 1A P 12.0	4
34	186314	BOLT 8X80	2
35	186528	SUPPORT CMP	1
36	186523	SHAFT,ROCKER ARM	1
37	186524	SUPPORT A	3
38	186525	SUPPORT B	2
39	186401	WAVE WASHER	8
40	186530	ARM ASSY, ROCKER	4
42	188596	SCREW, VALVE	4
43	425-34791	NUT M8XP1.0	4
44	186531	ARM ASSY, ROCKER	4
46	188596	SCREW, VALVE	4

Parts Listing Continued On Next Page

https://truckmanualshub.com/

CYLINDER HEAD AND BONNET

T-ZNMS and T-ZNTBL

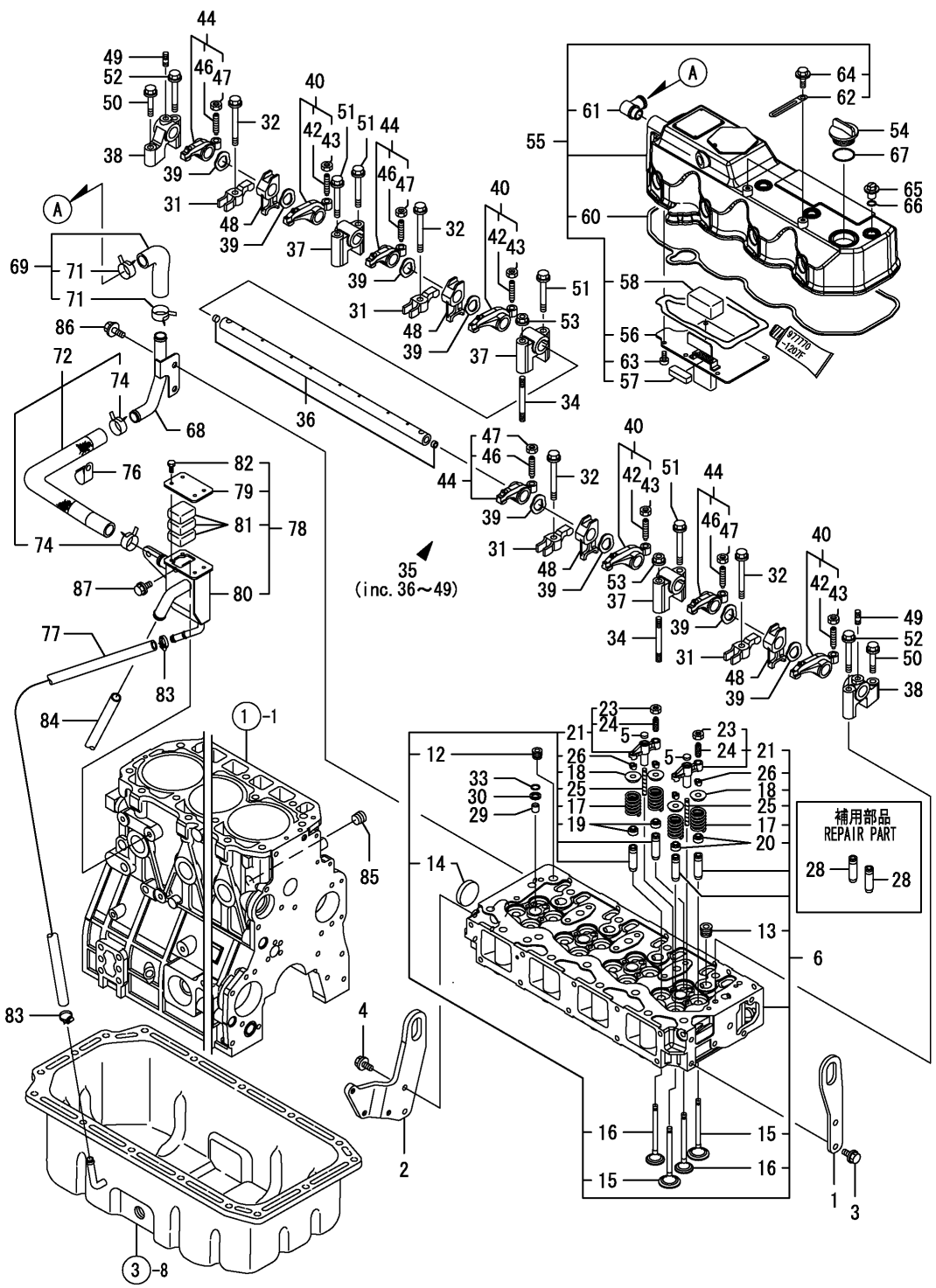

Y00W2670	4. CYLINDER HEAD & BONNET				
4TNV98T-ZNMS		1. 07/12	2	3	PLUS

https://truckmanualshub.com/

continued from previous page

Ref. No.	Part No.	Description	Quantity T-ZNMS/T-ZNTBL
47	425-34791	NUT M8XP1.0	4
48	186535	PEDESTAL,RETAINER	4
49	186624	STUD M 8X 22 PLATED	2
50	188742	BOLT M 8X 40 PLATED	2
51	188746	BOLT M 8X 60 PLATED	4
52	188746	BOLT M 8X 60 PLATED	2
53	138140	NUT	2
54	425-34740	COVER,FILLER	1
55	197669	BONNET ASSY	1
56	197601	BAFFLE PLATE	1
57	197602	BAFFLE	1
58	186518	BAFFLE	1
60	197698	GASKET, BONNET	1
61	197449	JOINT, BREATHER	1
62	197572	CLIP	2
63	186598	SCREW 5X10,TAPPING	6
64	186615	BOLT M 6X 12 PLATED	2
65	425-34775	KNOB	4
66	425-34776	O-RING 1A P 12.0	4
67	425-34745	O-RING 1A P-32.0	1
68	197665	PIPE, BREATHER	1
69	197666	HOSE CMP, BREATHER	1
71	188632	CLAMP 22	2
72	197666	HOSE CMP, BREATHER	1
74	188632	CLAMP 22	2
76	425-34772	RETAINER	1
77	197475	HOSE, RETURN (T-ZNMS)	1
	197667	HOSE ASSY,BREAZER (T-ZNTBL, INCLUDES PIPE PROTECTOR)	1
	197692	PROTECTOR, PIPE 19	1
78	197749	MISTSEPARATOR ASSY	1
79	197747	COVER,SEPARATOR	1
80	197748	MISTSEPARATOR	1
81	138479	WOOL, STEEL	3
82	197810	BOLT M 5X 10 PLATED	4
83	197789	CLAMP 22	2
84	197792	HOSE, 16 X 250	1
85	425-36260	PLUG PT3/8,SCREW	1
86	425-34729	BOLT M 8X 12 PLATED	2
87	188736	BOLT 8X 14 PLATED	2

https://truckmanualshub.com/

ZNMS AND ZNTBL Engines

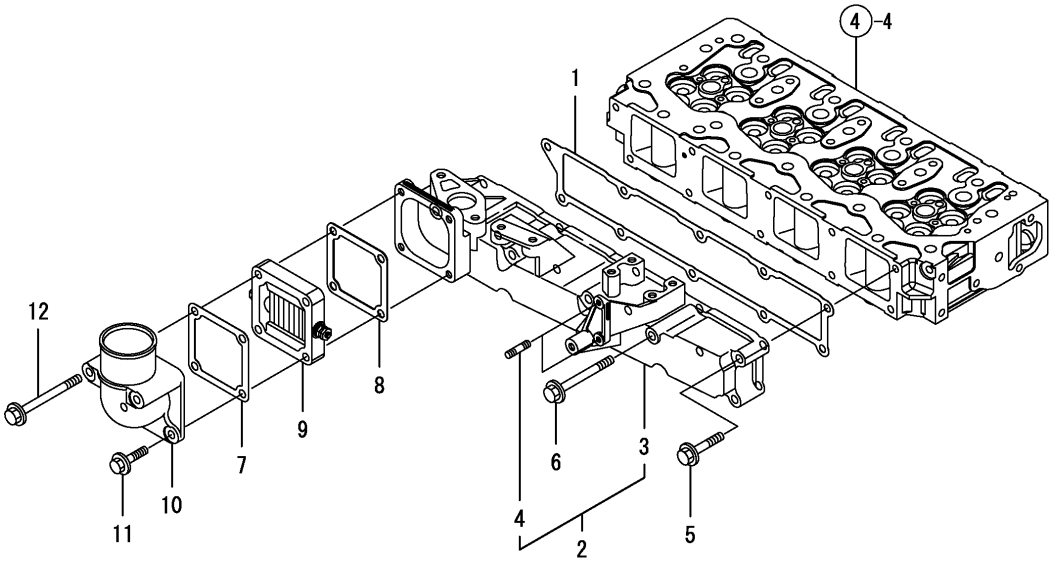

Y00W2680	5, SUCTION MANIFOLD			
4TNV98-ZNMS	1, 07/12	2	3	PLUS

https://truckmanualshub.com/

SUCTION MANIFOLD

Ref. No.	Part No.	Description	Quantity ZNMS/ZNTBL
1	186538	PACKING(INT.MANIFOLD	1
2	197624	MANIFOLD CMP,INTAKE	1
3		MANIFOLD,INTAKE	1
4	425-34780	STUD M 6X 20 PLATED	2
5	425-34747	BOLT M 8X 45 PLATED	6
6	425-34800	BOLT M 8X 80 PLATED	4
7	197450	GASKET	1
8	425-36318	GASKET, (NON-ASB.)	1
9	197705	HEATER, AIR	1
10	197451	BEND	1
11	188742	BOLT M 8X 40 PLATED	2
12	186618	BOLT M 8X 90 PLATED	2

https://truckmanualshub.com/

T-ZNMS and T-ZNTBL Engines

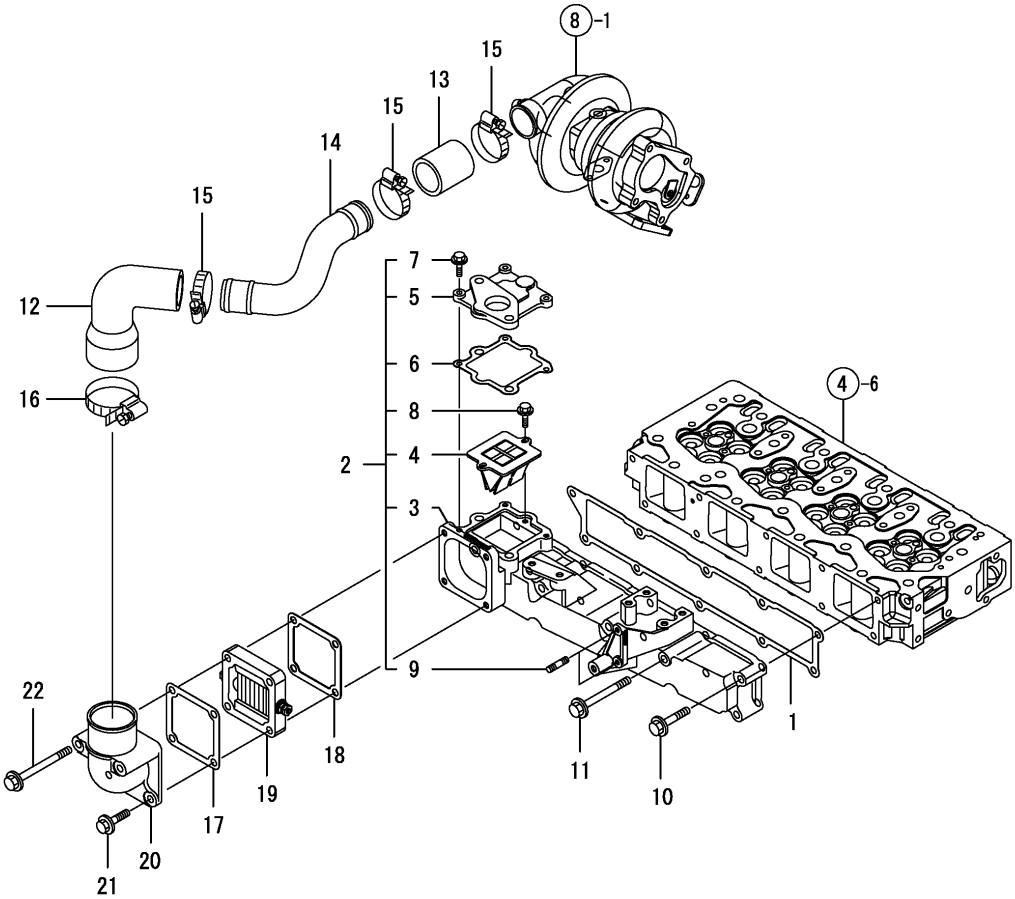

Y00W2670	5, SUCTION MANIFOLD				
4TNV98T-ZNMS		1, 07/12	2	3	PLUS

https://truckmanualshub.com/

SUCTION MANIFOLD

Ref. No.	Part No.	Description	Quantity T-ZNMS/T-ZNTBL
1	186538	PACKING(INT.MANIFOLD	1
2	197672	MANIFOLD CMP,INTAKE	1
3	197671	MANIFOLD,INTAKE	1
4	197677	REEDVALVE	1
5	197678	SPACER(EGR VALVE	1
6	197679	GASKET(EGR-V SPACER	1
7	188732	BOLT M 6X 20 PLATED	3
8	188732	BOLT M 6X 20 PLATED	2
9	425-34780	STUD M 6X 20 PLATED	2
10	425-34747	BOLT M 8X 45 PLATED	6
11	425-34800	BOLT M 8X 80 PLATED	4
12	197750	RUBBER HOSE	1
13	197483	JOINT B	1
14	197476	DUCT,SUCTION	1
15	425-36131	CLAMP 54	3
16	425-36133	CLAMP 70	1
17	197450	GASKET	1
18	425-36318	GASKET, (NON-ASB.)	1
19	197705	HEATER, AIR	1
20	197451	BEND	1
21	188742	BOLT M 8X 40 PLATED	2
22	186618	BOLT M 8X 90 PLATED	2

https://truckmanualshub.com/

ZNMS Engine

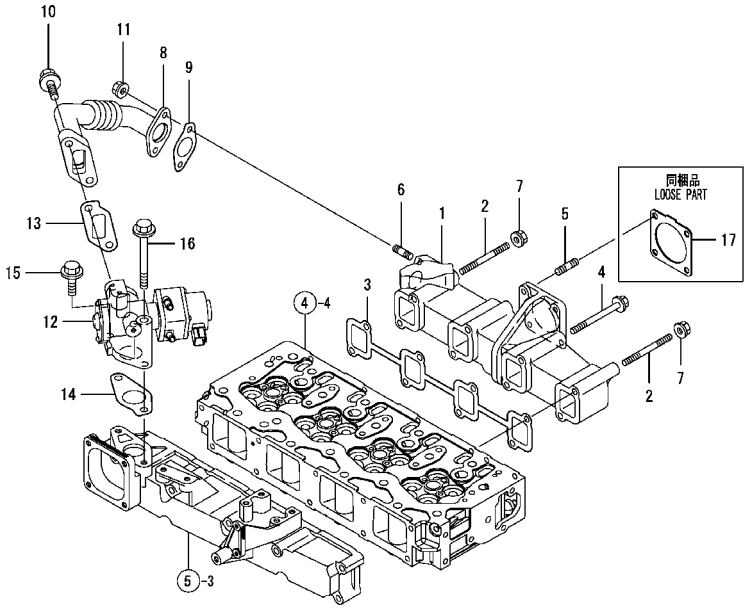

ZNTBL Engine

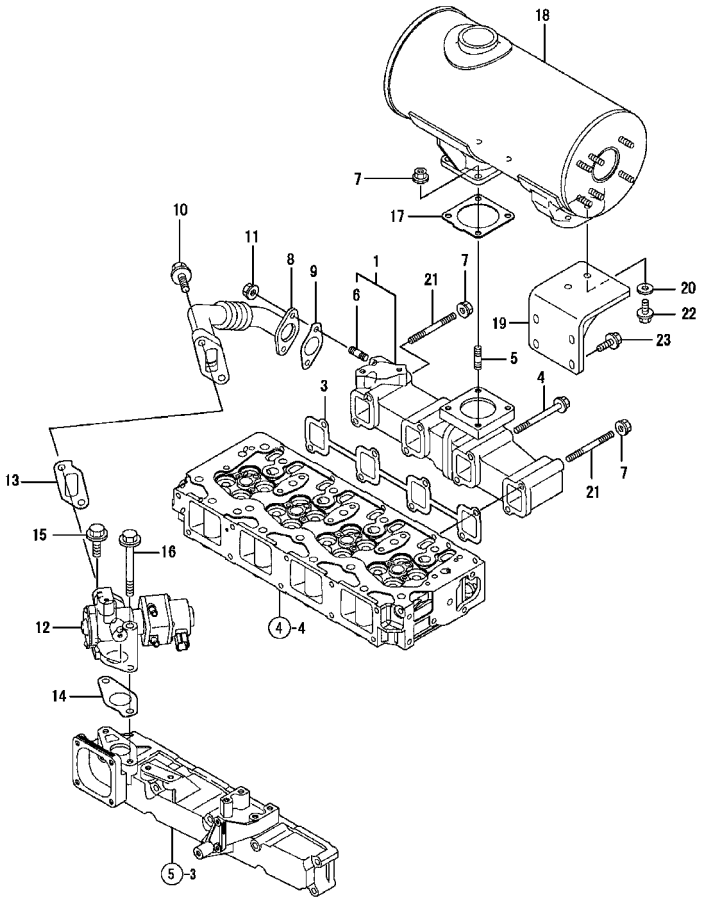

https://truckmanualshub.com/

EXHAUST MANIFOLD AND SILENCER

Ref. No.	Part No.	Description	Quantity ZNMS/ZNTBL
1	197469	MANIFOLD,EXHAUST (ZNMS)	1
	197625	MANIFOLD,EXHAUST (ZNTBL)	1
2	197507	STUD	2
3	425-36128	GASKET	1
4	197462	BOLT, M8X90	6
5	425-36249	BOLT M 8X 22	4
6	138512	STUD BOLT M8X20	2
7	138140	NUT	2
8	197626	PIPE(EGR CMP	1
9	197627	GASKET, EGR PIPE	1
10	197807	BOLT M10X 30 PLATED	2
11	138140	NUT (ZNMS)	2
	138140	NUT (ZNTBL)	4
12	197628	EGR VALVE	1
13	197629	GASKET(EGR-V IN	1
14	197630	GASKET(EGR-V OUT	1
15	197807	BOLT M10X 30 PLATED	1
16	138522	BOLT M10X 95 PLATED	1
17	138104	GASKET, SILENCER	1
18	186567	SILENCER	1
19	186568	STAY, SILENCER	1
20	186593	WASHER 8	2
21	197507	BOLT, M8X100	2
22	425-34733	BOLT, M8X16 PLATED	2
23	425-34746	BOLT, M8X20 PLATED	4

https://truckmanualshub.com/

T-ZNMS and T-ZNTBL Engine

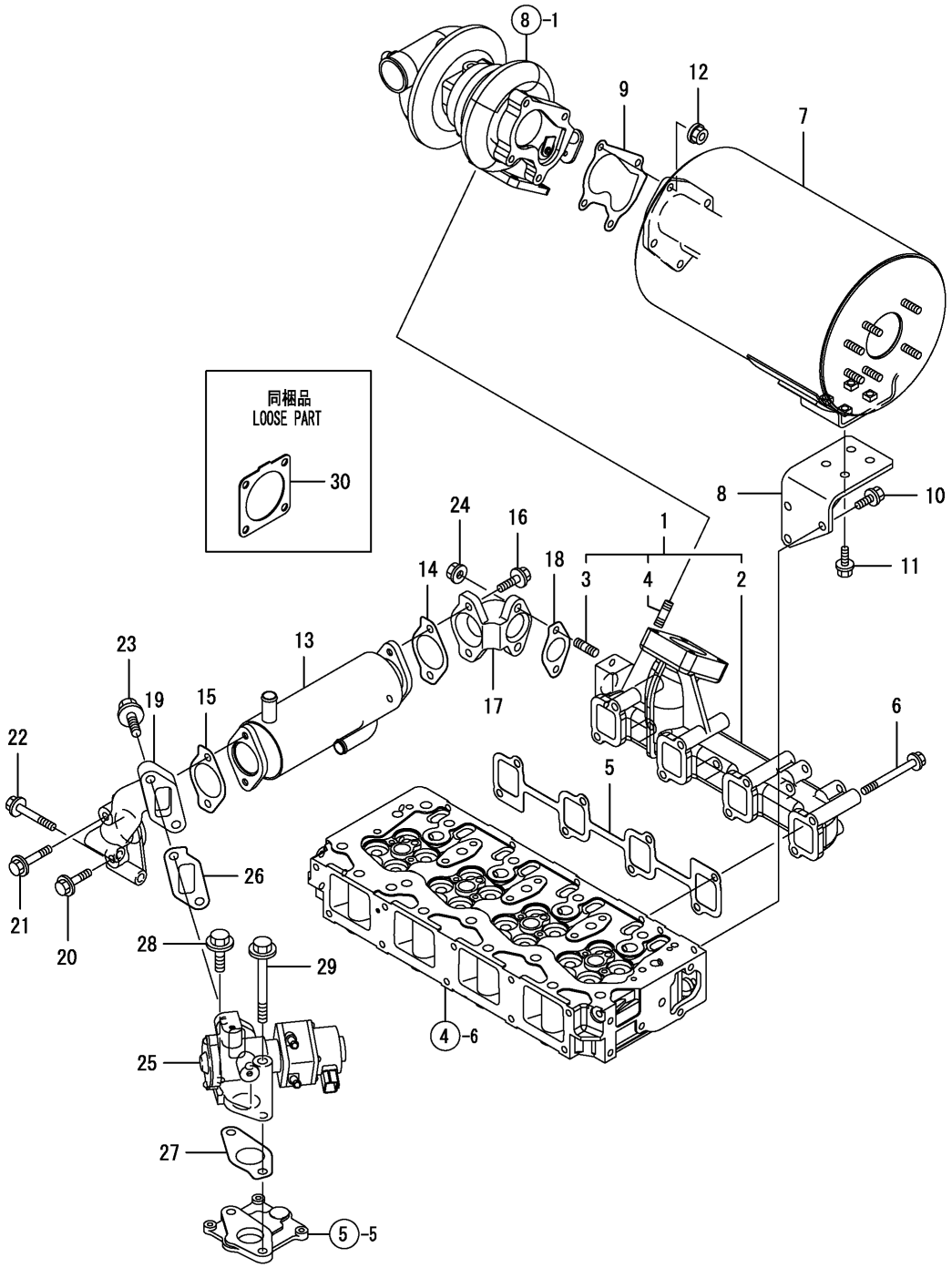

Y00D9990	6, ハイキマニホールド & サイレンサ			
4TNV98T-ZNTBL	1, 08/01	2	3	PLUS

https://truckmanualshub.com/

EXHAUST MANIFOLD AND SILENCER

Ref. No.	Part No.	Description	Quantity T-ZNMS/T-ZNTBL
1	197674	MANIFOLD ASSY,EXH (T-ZNTBL)	1
2	197673	MANIFOLD, EXHAUST (T-ZNTBL)	1
	197737	MANIFOLD, EXHAUST (T-ZNMS)	1
3	138512	STUD BOLT M8X20	2
4	425-36249	BOLT M 8X 22	4
5	425-36128	GASKET	1
6	186375	BOLT 8X80	8
7	197609	SILENCER (T-ZNTBL)	1
8	197699	STAY, SILENCER (T-ZNTBL)	1
9	138488	PK(T/C OUT	1
10	425-34733	BOLT M8X16 PLATED (T-ZNTBL)	3
11	425-34746	BOLT M8 X 20 PLATED (T-ZNTBL)	4
12	138140	NUT (T-ZNTBL)	4
13	197675	EGR COOLER	1
14	197676	GASKET, EGR COOLER	1
15	197676	GASKET, EGR COOLER	1
16	197463	BOLT, M8X25	2
17	197680	PIPE(EGR IN	1
18	197627	GASKET, EGR PIPE	1
19	197681	PIPE(EGR OUT	1
20	425-34761	BOLT M 8X 35 PLATED	1
21	425-34747	BOLT M 8X 45 PLATED	1
22	425-34748	BOLT M 8X 55 PLATED	2
23	425-35772	BOLT M10X 25 PLATED	2
24	138140	NUT	2
25	197628	EGR VALVE	1
26	197629	GASKET(EGR-V IN	1
27	197630	GASKET(EGR-V OUT	1
28	197808	BOLT M10X 40 PLATED	1
29	197809	BOLT M10X105 PLATED	1
30	138104	GASKET, SILENCER (T-ZNTBL)	1

https://truckmanualshub.com/

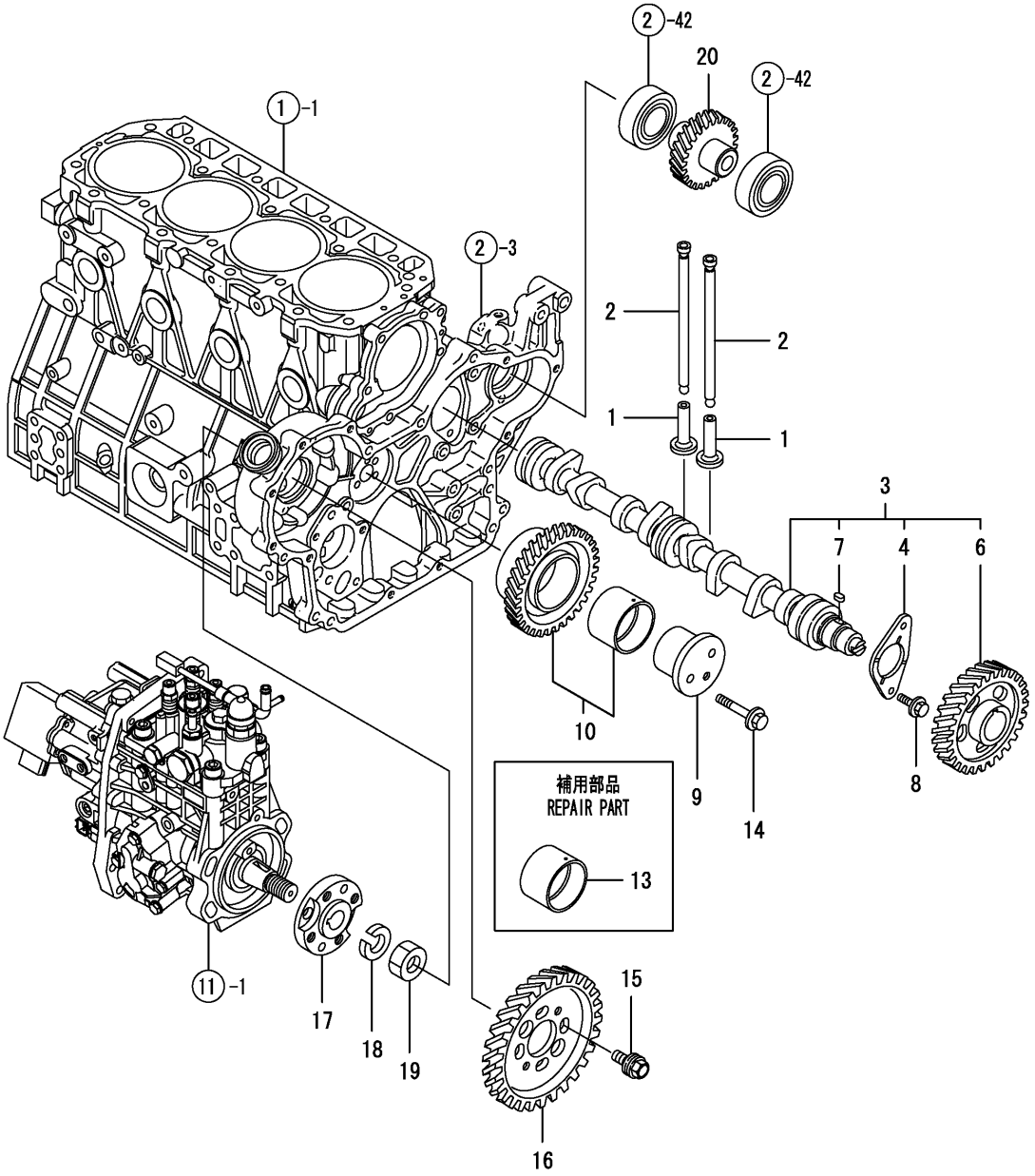

Y00W2680	7. CAMSHAFT & DRIVING GEAR			
4TNV98-ZNMS	1. 07/12	2	3	PLUS

https://truckmanualshub.com/

CAMSHAFT AND DRIVING GEAR

Ref. No.	Part No.	Description	Quantity 4TNV98
1	186471	TAPPET	8
2	186539	PUSH ROD	8
3	197610	CAMSHFT ASSY (ZNMS AND T-ZNMS)	1
	197611	CAMSHFT ASSY (ZNTBL AND T-ZNTBL)	1
4	425-34656	METAL,THRUST(CAM	1
6	138097	GEAR, CAMSHAFT	1
7	425-34810	KEY 7X 14	1
8	425-34733	BOLT M 8X 16 PLATED	2
9	138020	SHAFT(GEAR,IDLE	1
10	197597	GEAR ASSY, IDLE (ZNMS AND T-ZNMS)	1
	186505	GEAR ASSY, IDLE (ZNTBL AND T-ZNTBL)	1
13	425-34813	BUSH, IDLE GEAR	1
14	425-34748	BOLT M 8X 55 PLATED	3
15	186579	BOLT	4
16	197605	GEAR,F.I.PUMP	1
17	186590	FLANGE	1
18	186596	SPRING WASHER 18	1
19	186626	NUT M18,LOCK	1
20	197752	GEAR, H.O. PUMP (ZNMS AND T-ZNMS)	1
	186506	GEAR, H.O. PUMP (ZNTBL AND T-ZNTBL)	1

https://truckmanualshub.com/

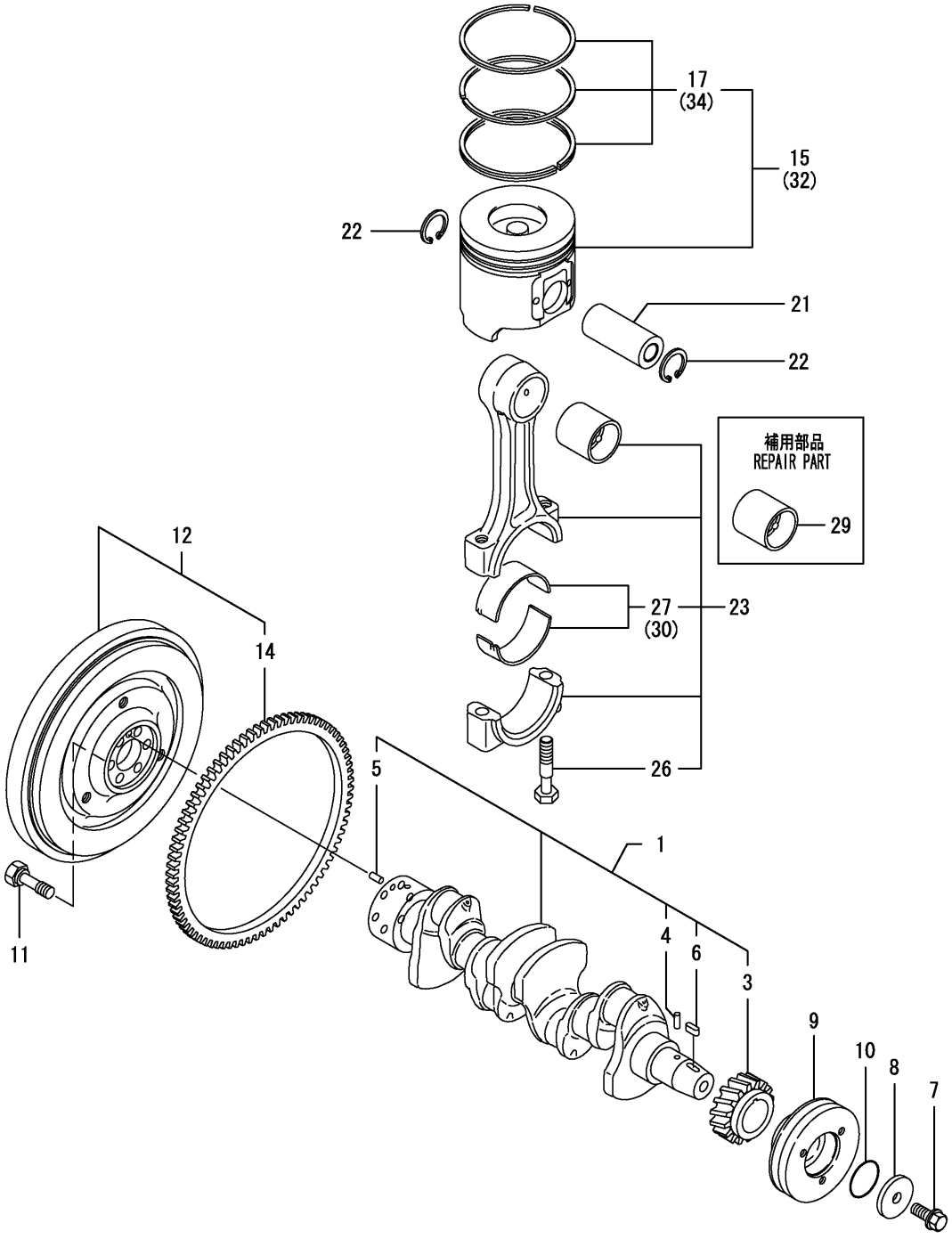

Y00W2680	8, CRANKSHAFT & PISTON			
4TNV98-ZNMS	1, 07/12	2	3	PLUS

https://truckmanualshub.com/

Ref. No.	Part No.	Description	Quantity 4TNV98
1	197598	CRANKSHAFT COMP (ZNMS)	1
	197612	CRANKSHAFT COMP (T-ZNMS)	1
	186510	CRANKSHAFT COMP (ZNTBL)	1
	197613	CRANKSHAFT ASSY (T-ZNTBL)	1
3	138098	GEAR, CRANKSHAFT	1
	186498	GEAR, CRANKSHAFT (T-ZNTBL)	1
4	137957	PARALLEL PIN	1
5	137958	PARALLEL PIN 10X22	1
6	425-34810	KEY 7X 14	1
7	186663	BOLT, V-PULLEY	1
8	186585	WASHER	1
9	197604	V-PULLEY,CRANKSHAFT (ZNMS AND T-ZNMS)	1
	186662	V-PULLEY,CRANKSHAFT (ZNTBL AND T-ZNTBL)	1
10	186611	O-RING 1A S-53.0	1
11	137956	BOLT, FLYWHEEL	6
12	186578	FLYWHEEL ASSY	1
	197739	FLYWHEEL ASSY (T-ZNTBL)	1
14	186499	GEAR, RING	1
15	197632	PISTON ASSY (ZNMS AND ZNTBL)	4
	197682	PISTON ASSY (T-ZNMS AND T-ZNTBL)	4
17	197631	RING SET, PISTON	4
21	186343	PIN, PISTON	4
22	197783	CIRCLIP 30	8
23	197594	ROD ASSY, CONNECTING	4
26	186501	BOLT, ROD	8
27	186502	METAL ASSY, CRANKPIN	4
29	197596	BUSH, PISTON PIN	4
30	197595	BEARING,PIN U.S=0.25	4
32	197828	PISTON W/RING,0.25OS (ZNMS AND ZNTBL)	4
	197832	PISTON W/RING,0.25OS (T-ZNMS AND T-ZNTBL)	4
34	197829	RING SET, 0.25OS	4

https://truckmanualshub.com/

ZNMS Engine

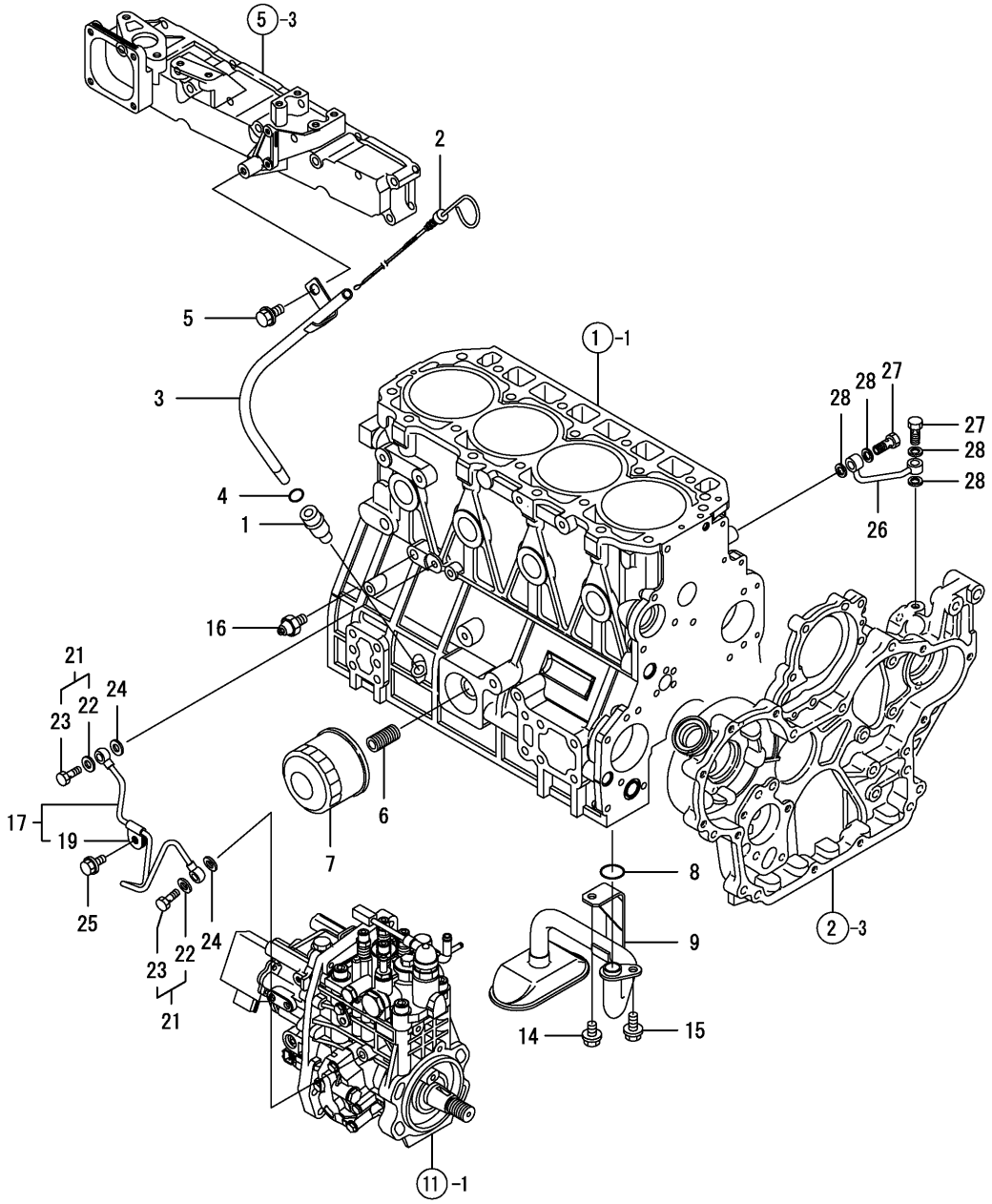

Y00W2680	9. LUB. OIL SYSTEM			
4TNV98-ZNMS	1. 07/12	2	3	PLUS

https://truckmanualshub.com/

Ref. No.	Part No.	Description	Quantity ZNMS
1	425-34825	GUIDE, DIPSTICK	1
2	197607	DIPSTICK	1
3	197683	DIPSTICK	1
4	425-34827	O-RING 1A P-10A	1
5	425-34733	BOLT M 8X 16 PLATED	1
6	186302	STUD, LUB.OIL FILTER	1
7	194315	FILTER 80X80L	1
8	138100	O-RING P20	1
9	197743	PIPE ASY,L.OIL INLET	1
14	425-34729	BOLT M 8X 12 PLATED	1
15	425-34733	BOLT M 8X 16 PLATED	1
16	425-36085	SENDER, OIL PRESSURE	1
17	197633	PIPE ASSY, LUB.OIL	1
19	186421	SUPPORT,PIPE	1
21	186468	BOLT ASSY, JOINT	2
22	425-34750	SEAL WASHER 8S	2
23	186600	JOINT BOLT 3	2
24	425-34750	SEAL WASHER 8S	2
25	425-34729	BOLT M 8X 12 PLATED	1
26	186565	PIPE	1
27	186300	BOLT, PIPE JOINT	2
28	425-34750	SEAL WASHER 8S	4

https://truckmanualshub.com/

T-ZNMS Engine

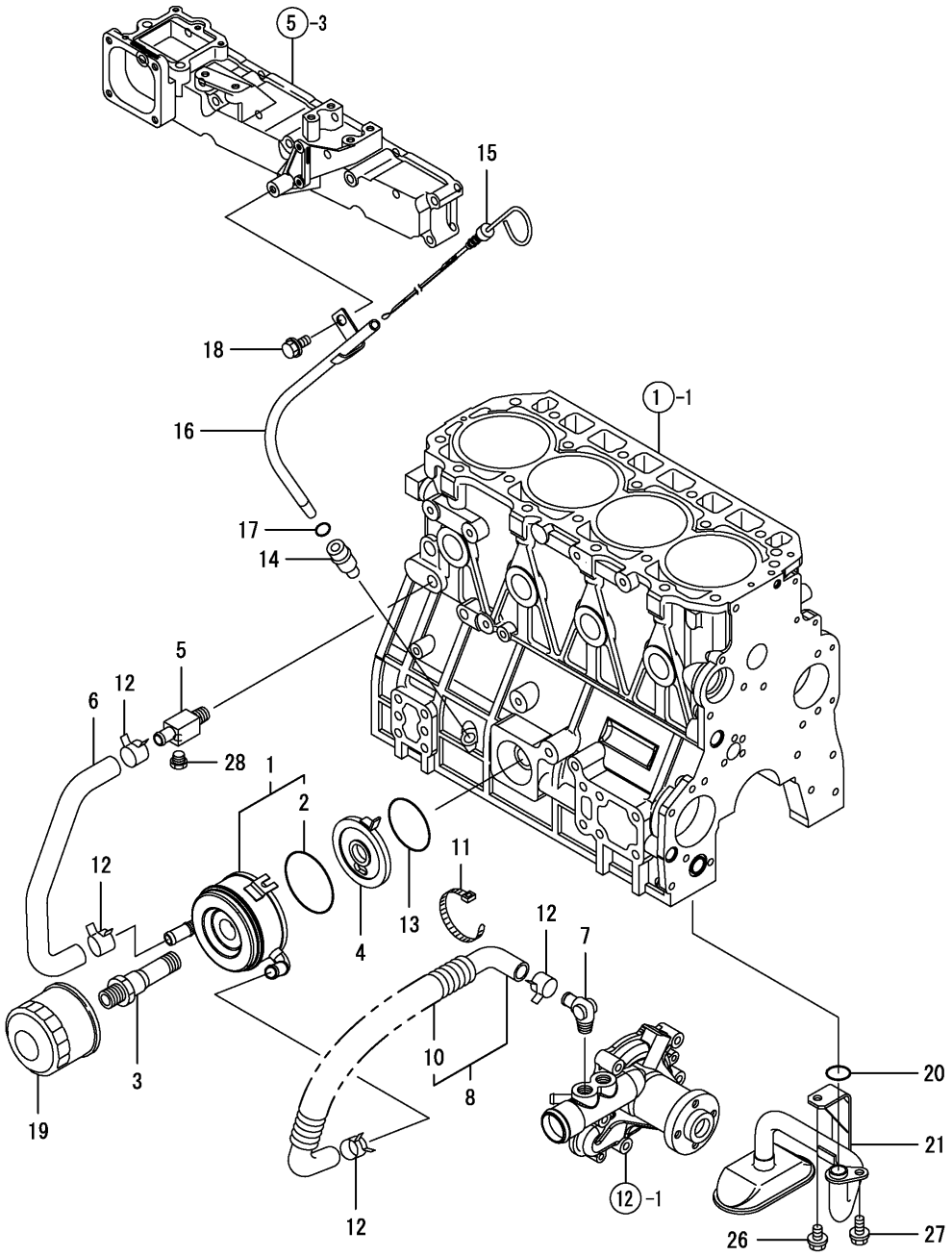

Y00W2670	10. LUB. OIL SYSTEM				
4TNV98T-ZNMS		1. 07/12	2	3	PLUS

https://truckmanualshub.com/

Ref. No.	Part No.	Description	Quantity T-ZNMS
1	197615	COOLER ASSY, OIL	1
2	197481	O-RING	1
3	138072	BOLT, L.O.COOLER	1
4	197616	BRACKET,OIL COOLER	1
5	188567	JOINT	1
6	197619	PIPE, COOLING WATER	1
7	138093	ELBOW PT3/8	1
8	186442	PIPE, C.W.	1
10	186443	PROTECTER,CW-T	1
11	137953	CLAMP 140	1
12	197790	CLAMP 25	4
13	186609	O-RING 1A G-60.0	1
14	425-34825	GUIDE, DIPSTICK	1
15	197607	DIPSTICK	1
16	197683	DIPSTICK	1
17	425-34827	O-RING 1A P-10A	1
18	425-34733	BOLT M 8X 16 PLATED	1
19	194315	FILTER 80X80L	1
20	138100	O-RING P20	1
21	197743	PIPE ASY,L.OIL INLET	1
26	425-34729	BOLT M 8X 12 PLATED	1
27	425-34733	BOLT M 8X 16 PLATED	1
28	270970	PLUG, DRAIN	1

https://truckmanualshub.com/

ZNTBL and T-ZNTBL Engines

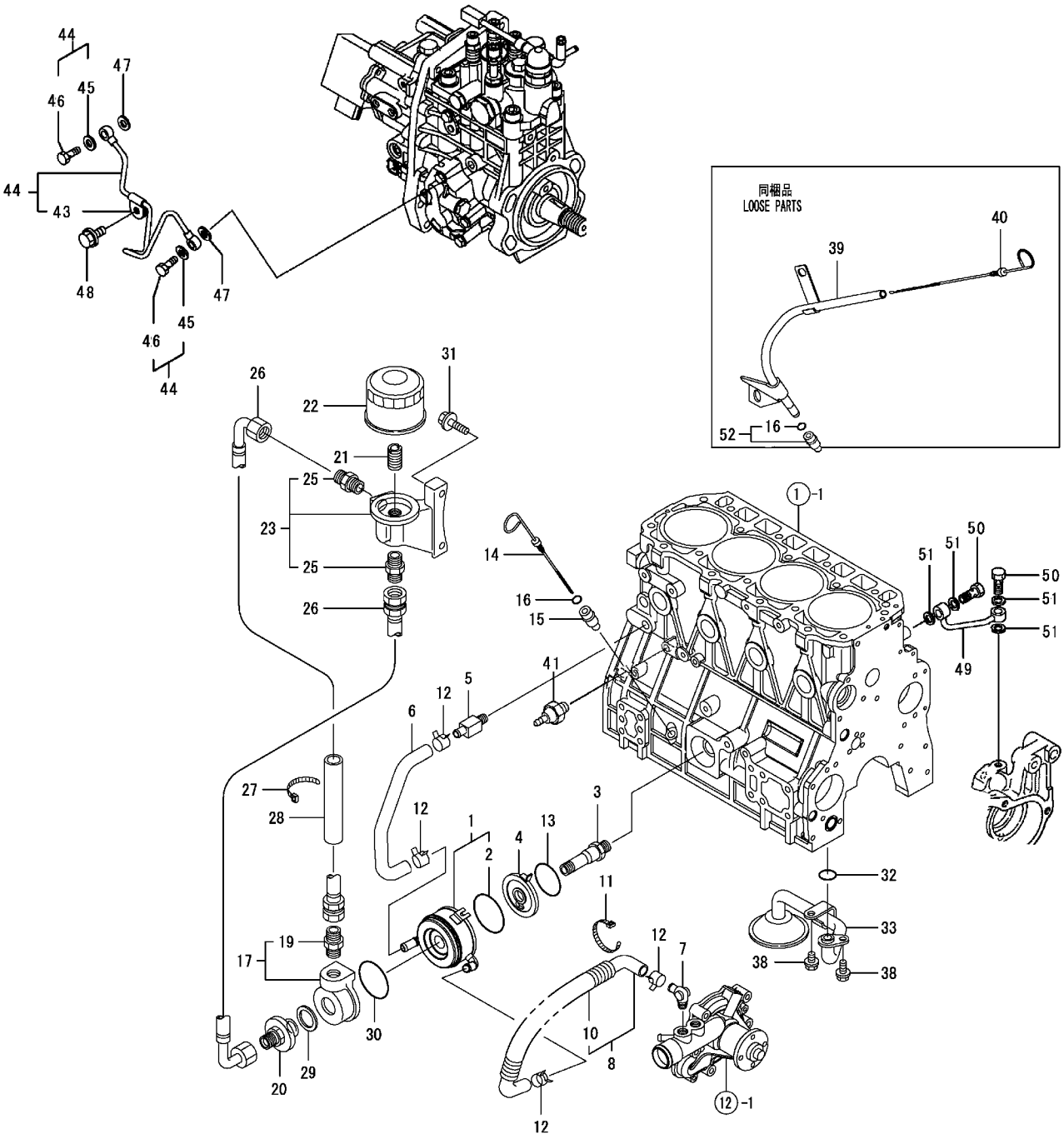

https://truckmanualshub.com/

Ref. No.	Part No.	Description	Quantity ZNTBL/T-ZNTBL
1	197615	COOLER ASSY, OIL (T-ZNTBL)	1
2	197481	O-RING (T-ZNTBL)	1
3	186587	STUD, LUB.OIL FILTER (ZNTBL)	1
	138072	BOLT, L.O.COOLER (T-ZNTBL)	1
4	197616	BRACKET,OIL COOLER (T-ZNTBL)	1
5	188567	JOINT (T-ZNTBL)	1
6	197619	PIPE, COOLING WATER (T-ZNTBL)	1
7	138093	ELBOW PT3/8 (T-ZNTBL)	1
8	186442	PIPE, C.W. (T-ZNTBL)	1
10	186443	PROTECTER,CW-T (T-ZNTBL)	1
11	137953	CLAMP 140 (T-ZNTBL)	1
12	197790	CLAMP 25 (T-ZNTBL)	4
13	186609	O-RING 1A G-60.0	1
14	197606	DIPSTICK (ZNTBL)	1
	197870	DIPSTICK (T-ZNTBL)	1
15	425-34825	GUIDE, DIPSTICK	1
16	425-34827	O-RING 1A P-10A	1
17	186569	CASE ASSY, LUB. OIL (ZNTBL)	1
	186451	CASE ASSY, LUB. OIL (T-ZNTBL)	1
19	186582	ADAPTER	1
20	186580	COVER	1
21	186302	STUD, LUB.OIL FILTER	1
22	194315	FILTER 80X80L	1
23	197734	BRACKET ASSY, LUB.OIL (ZNTBL)	1
	186570	SPACER(LO, FILTER (ZNTBL ONLY - NOT SHOWN)	1
	197740	BRACKET ASSY, LUB.OIL (T-ZNTBL)	1
25	186582	ADAPTER	2
26	197735	PIPE, LUB.OIL (ZNTBL)	1
	197744	PIPE, LUB.OIL (ZNTBL)	1
	197482	LO-T (T-ZNTBL)	2
27	186665	CLAMP 200 (T-ZNTBL)	1
28	186666	PROTECTOR (T-ZNTBL)	1
29	186595	SEAL WASHER 30S	1
30	186610	O-RING 1A G70.0,NBR (T-ZNTBL)	1
31	425-34766	BOLT M8X50 PLATED (ZNTBL)	2
	138136	BOLT M10X45 PLATED (T-ZNTBL AND ZNTBL)	2
32	138100	O-RING P20	1
33	186508	PIPE ASSY, LUB.OIL	1
38	425-34729	BOLT M8X12 PLATED	2
39	197710	GUIDE, DIPSTICK	1
40	186574	DIPSTICK (ZNTBL)	1
	197712	OIL,DIPSTICK (T-ZNTBL)	1

Following Parts Are For ZNTBL Engines

Ref. No.	Part No.	Description	Quantity ZNTBL
41	425-34684	SWITCH, (0.5KG)L.O.	1
42	197633	PIPE ASSY, LUB.OIL	1
43	186421	SUPPORT, PIPE	1
44	186468	BOLT ASSY, JOINT	2
45	425-34750	SEAL WASHER 8S	2
46	186600	JOINT BOLT 3	2
47	425-34750	SEAL WASHER 8S	2
48	425-34729	BOLT M8X12 PLATED	1
49	186565	PIPE	1
50	186300	BOLT, PIPE JOINT	2
51	425-34750	SEAL WASHER 8S	4
52	197711	GUIDE, LO GAUGE, CMP	1

https://truckmanualshub.com/

ZNMS Engine

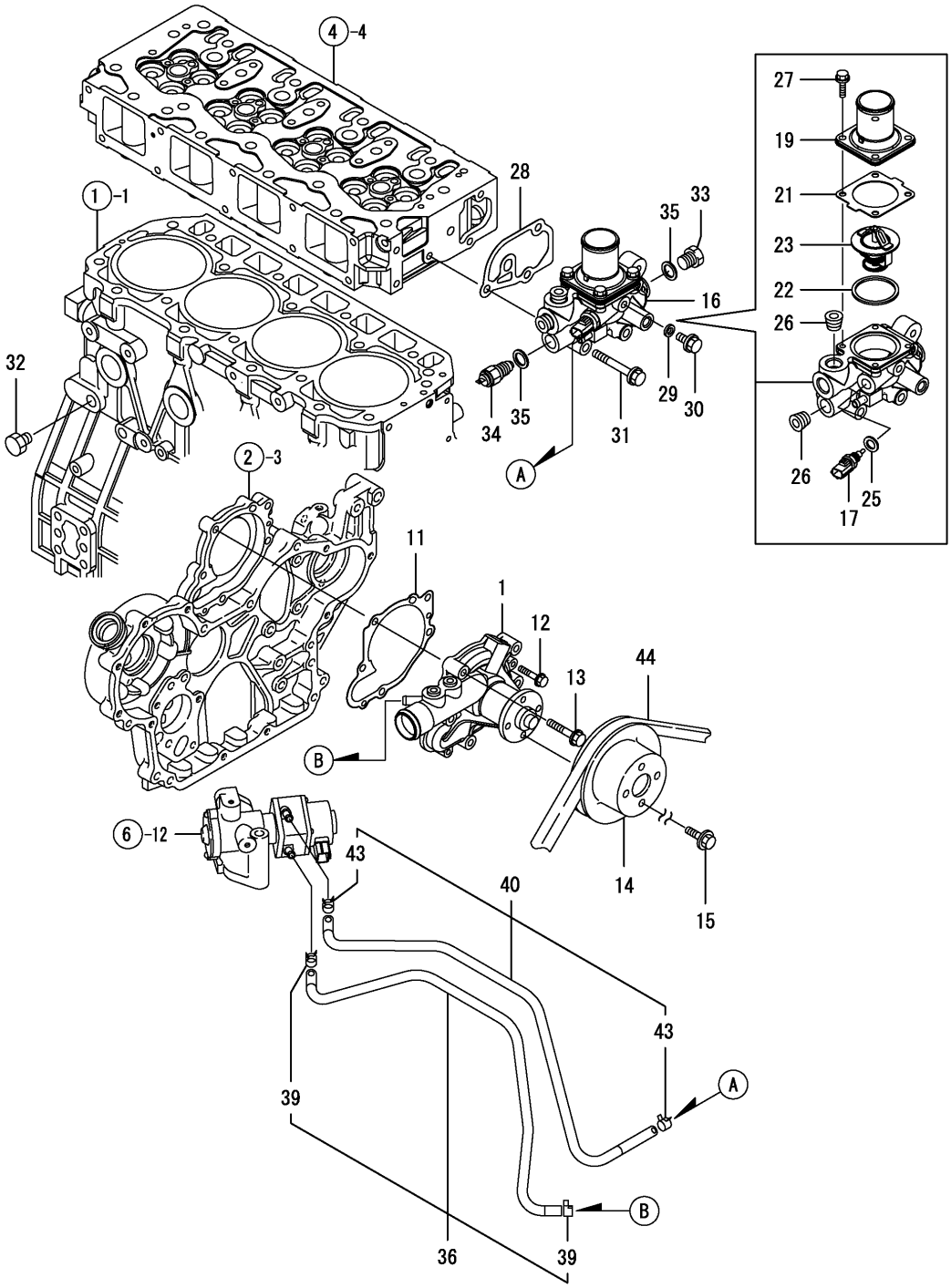

Y00W2680	10, COOLING WATER SYSTEM			
4TNV98-ZNMS	1, 07/12	2	3	PLUS

https://truckmanualshub.com/

Ref. No.	Part No.	Description	Quantity ZNMS
1	197634	PUMP ASSY,WATER	1
11	425-36113	GASKET, CW-P	1
12	425-35165	BOLT M 6X 30 PLATED	2
13	425-34748	BOLT M 8X 55 PLATED	5
14	197695	PULLEY	1
15	186615	BOLT M 6X 12 PLATED	4
16	197638	CASE ASSY,THERMOSTAT	1
17	197635	THERMOMETER	1
19	186564	COVER, THERMOSTAT	1
21	425-36114	GASKET, THERMOSTAT	1
22	186370	GASKET, THERMOSTAT	1
23	186371	THERMOSTAT	1
25	425-35959	SEAL WASHER 12	1
26	138123	PLUG PT3/8,STEEL	2
27	188732	BOLT M 6X 20 PLATED	4
28	425-36319	GASKET, CASE	1
29	425-34727	GASKET 8, ROUND	1
30	425-34729	BOLT M 8X 12 PLATED	1
31	188746	BOLT M 8X 60 PLATED	3
32	270970	PLUG, DRAIN	1
33	425-34851	PLUG M16	1
34	197459	SWITCH, THERMO 111	1
35	160427	GASKET 16	2
36	197636	PIPE ASSY, WATER A	1
39	197793	CLAMP 12	2
40	197637	PIPE ASSY, WATER B	1
43	197793	CLAMP 12	2
44	197802	V-BELT A44	1

https://truckmanualshub.com/

T-ZNMS and T-ZNTBL Engines

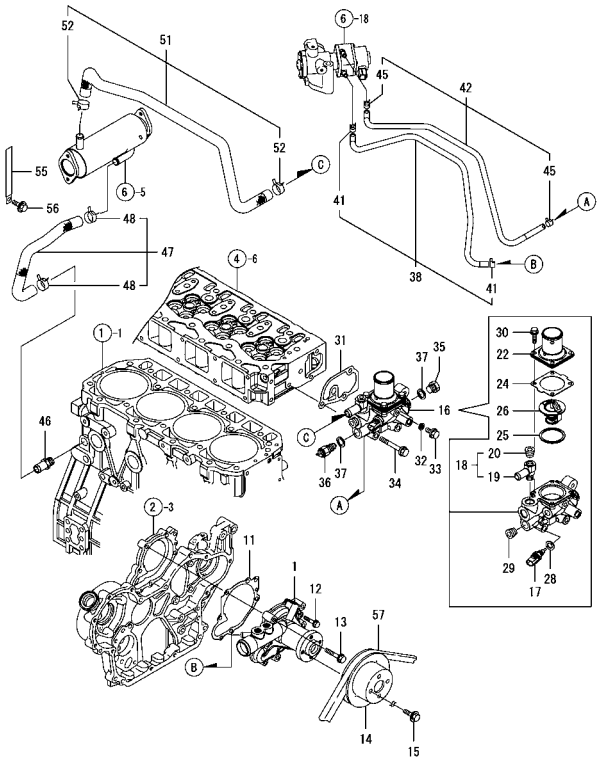

ZNTBL Engine

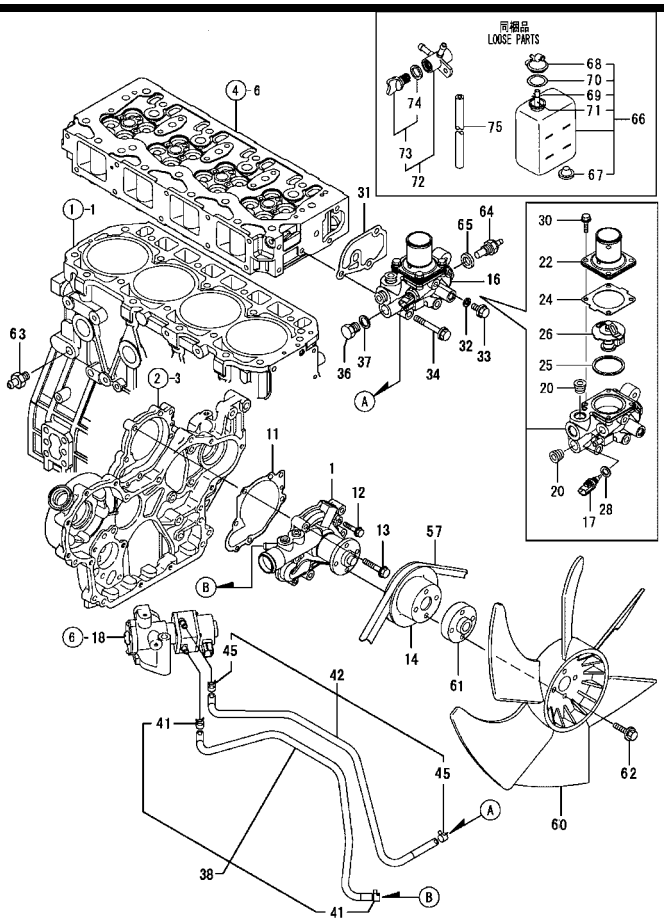

https://truckmanualshub.com/

Ref. No.	Part No.	Description	Quantity ZNTBL/T-ZNTBL/ T-ZNMS
1	197634	PUMP ASSY,WATER	1
11	425-36113	GASKET, CW-P	1
12	425-35165	BOLT M 6X 30 PLATED	2
13	425-34748	BOLT M 8X 55 PLATED	5
14	197695	PULLEY (T-ZNMS)	1
	197696	PULLEY (ZNTBL)	1
	183543	PULLEY (T-ZNTBL)	1
15	186615	BOLT M 6X 12 PLATED	4
16	197689	CASE ASSY,THERMOSTAT (T-ZNMS)	1
	197702	CASE ASSY,THERMOSTAT (ZNTBL)	1
	197741	CASE ASSY,THERMOSTAT (T-ZNTBL)	1
17	197635	THERMOMETER	1
18	197685	JOINT CMP	1
19	197686	JOINT	1
20	138123	PLUG PT3/8,STEEL	1
22	186564	COVER, THERMOSTAT	1
24	425-36114	GASKET, THERMOSTAT	1
25	186370	GASKET, THERMOSTAT	1
26	186371	THERMOSTAT	1
28	425-35959	SEAL WASHER 12	1
29	138123	PLUG PT3/8,STEEL	1
30	188732	BOLT M 6X 20 PLATED	4
31	425-36319	GASKET, CASE	1
32	425-34727	GASKET 8, ROUND	1
33	425-34729	BOLT M 8X 12 PLATED	1
34	188746	BOLT M 8X 60 PLATED	3
35	425-34851	PLUG M16	1
36	197459	SWITCH, THERMO 111	1
37	160427	GASKET 16	2
38	197636	PIPE ASSY, WATER A	1
41	197793	CLAMP 12	2
42	197637	PIPE ASSY, WATER B	1
45	197793	CLAMP 12	2
46	197687	JOINT	1
47	197738	PIPE ASSY, WATER IN	1
48	197745	HOSE CLIP 22	2
51	197688	PIPE ASSY, WATER OUT	1
52	197745	HOSE CLIP 22	2
55	197694	CRIP150-M8	1
56	425-34729	BOLT M 8X 12 PLATED	1
57	197802	V-BELT A44 (T-ZNMS)	1
	197803	V-BELT (ZNTBL)	1
	184405	V-BELT A41 (T-ZNTBL)	1
60	186563	FAN (ZNTBL)	1
61	186303	SPACER, FAN (ZNTBL)	1
	197446	SPACER, FAN (T-ZNTBL)	1
62	425-34761	BOLT M8X35 PLATED (ZNTBL)	4
	425-34747	BOLT M8X45 PLATED (T-ZNTBL)	4
63	425-34736	JOINT PT1/4 (T-ZNMS AND T-ZNTBL)	1
64	186311	SENSOR, THERMO. (T-ZNMS AND T-ZNTBL)	1
65	425-34707	GASKET 10 (T-ZNMS AND T-ZNTBL)	1
66	186479	SUBTANK (T-ZNMS AND T-ZNTBL)	1
67	186360	PLUG, SUBTANK	1
68	186359	CAP	1
69	186461	CLAMP	1
70	186361	GASKET	1
71	186358	PIPE	1
72	425-34854	COCK ASSY, 3-WAY	1
73	425-35273	COCK, DRAIN	1
74	197454	GASKET	1
75	186301	PIPE, FUEL	1

https://truckmanualshub.com/

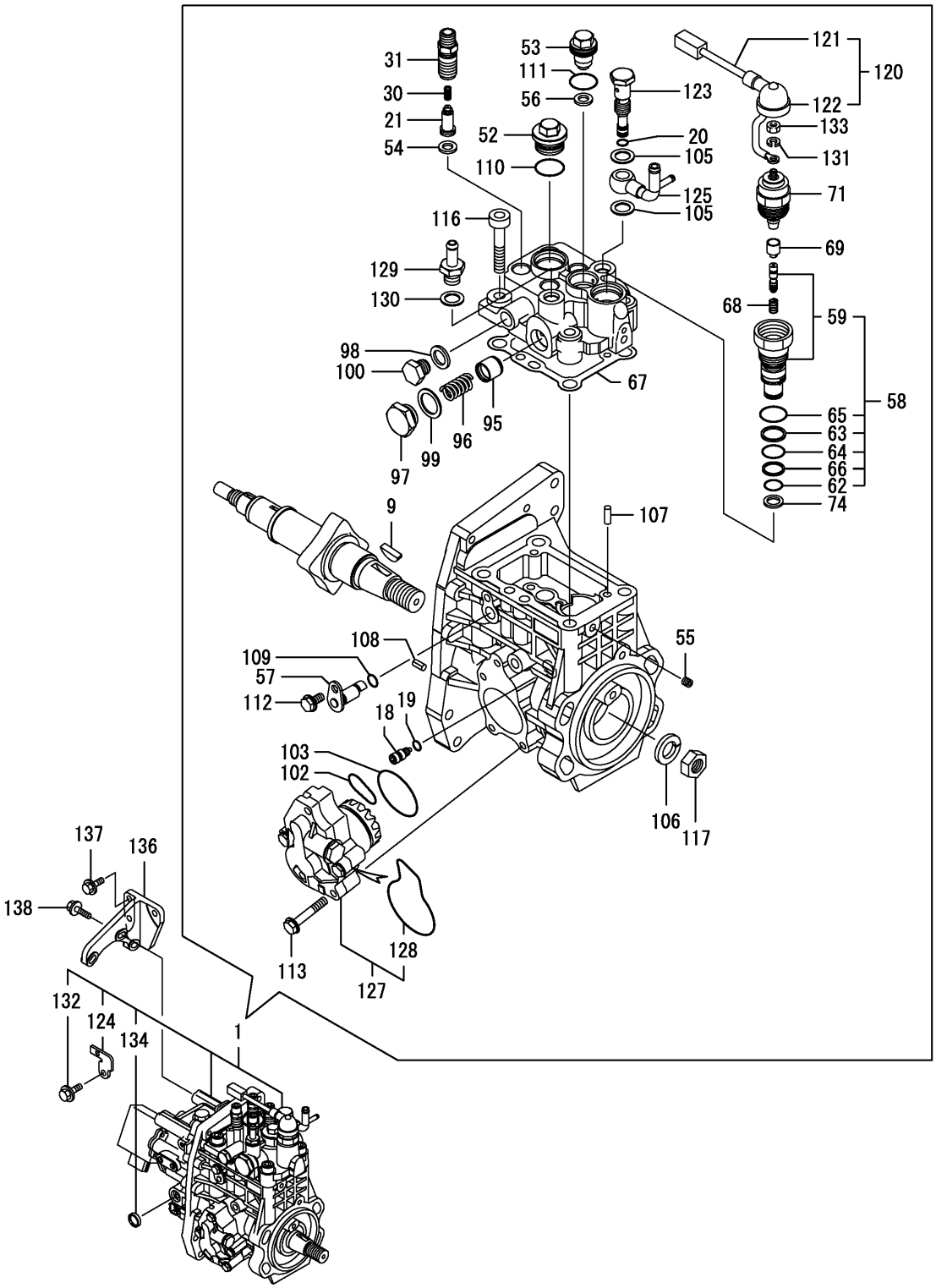

Y00W2680	11. FUEL INJECTION PUMP			
4TNV98-ZNMS	1. 07/12	2	3	PLUS

https://truckmanualshub.com/

Ref. No.	Part No.	Description	Quantity 4TNV98
1	197835	INJECTON PUMP ASSY (ZNMS)	1
	197837	INJECTON PUMP ASSY (T-ZNMS)	1
	197834	INJECTON PUMP ASSY (ZNTBL)	1
	197836	INJECTON PUMP ASSY (T-ZNTBL)	1
9	197754	KEY 5X19	1
18	197772	STOPPER	1
19	197770	O-RING	1
20	197770	O-RING	1
21	197640	VALVE ASSY, DELIVERY	4
30	186678	SPRING	4
31	197641	HOLDER,DELIVERY (ZNMS AND ZNTBL)	4
	197690	HOLDER,DELIVERY (T-ZNMS AND T-ZNTBL)	4
52	197773	PLUG	1
53	197608	PLUG	1
54	186676	PK(BARREL PLUG	4
55		PLUG	1
56	197599	PACKING, PLUG	1
57		LIFTER	1
58		TIMER SET	1
59		TIMER CMP	1
62		O-RING, 1011	1
63		BACKUP RING	1
64		O RING	1
65		PACKING, 1020	1
66		RING, BACKUP T2 P 15	1
67	197768	PACKING, HEAD	1
68		SPRING,TIMER	1
69		CAP,TIMER	1
71	197477	VALVE,SOLENOID	1
74		PACKING,TIMER	1
95		PISTON	1
96		DAMPER ASSY	1
97		PLUG	1
98	425-35959	SEAL WASHER 12	1
99	192294	SEAL WASHER 18	1
100	425-35174	PLUG M12,HEX.	1
102	192297	O-RING	1
103	192299	O-RING 4E S42	1
105	425-35959	SEAL WASHER 12	2
106	186596	SPRING WASHER 18	1
107		PARALLEL PIN 5X14	2
108	425-34892	SPRING PIN 5X10	2
109	186607	O-RING 1A P-7.0	1
110	197799	PACKING, 1020	1
111	197800	O RING	1
112	425-35263	BOLT 6X 10 PLATED	1
113	425-35705	BOLT M 6X 35 PLATED	4
116	197816	BOLT M10X 45	4
117	186626	NUT M18,LOCK	1
120	197642	HARNESS CMP	1
121	197643	HARNESS ,CSD	1
122	197510	CAP,RUBBER	1
123	192292	JOINT	1
124	197644	BRACKET ,CSD	1
125	192290	JOINT	1
127	192295	PUMP ASSY,FEED	1
128	192296	O-RING(FEED P INNER	1
129	192298	JOINT,PIPE	1
130	425-35959	SEAL WASHER 12	1
131	425-34968	SPRING WASHER 5	1
132	186615	BOLT M 6X 12 PLATED	1
133	197817	NUT M 5	1
134	197818	PLUG 16	1
136	197639	RETAINER(FOP	1
137	425-34746	BOLT M 8X 20 PLATED	3
138	425-34760	BOLT M 8X 30 PLATED	3

https://truckmanualshub.com/

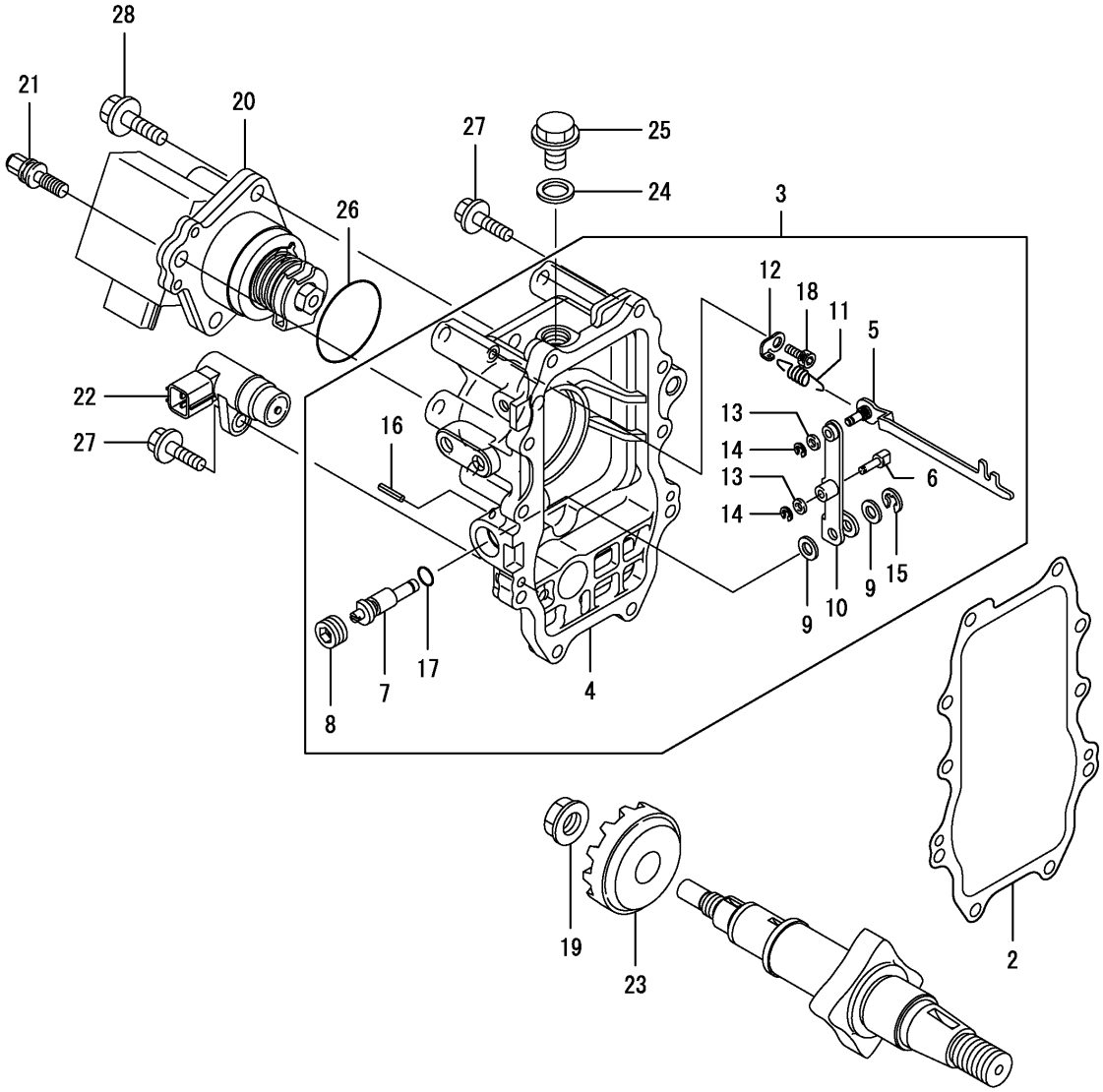

Y00W2680	12, GOVERNOR				
4TNV98-ZNMS		1, 07/12	2	3	PLUS

https://truckmanualshub.com/

Ref. No.	Part No.	Description	Quantity 4TNV98
2	197769	PACKING, CASE	1
3	197653	CASE ASSY, GOVERNOR	1
4	197652	CASE, GOVERNOR	1
5	197654	LINK	1
6	197693	PIN,GOVERNOR LEVER	1
7	197762	SHAFT,GOV.LEVER	1
8	197763	SCREW	1
9	197764	SPACER,GOV.LEVER	2
10	197655	LEVER, GOVERNOR	1
11	197765	SPRING	1
12	197766	LOCK,SPRING	1
13	197782	WASHER 4	2
14	197784	CIRCLIP E- 3	2
15	425-34969	CIRCLIP E- 4	1
16	197786	SPRING PIN 2X10	1
17	197795	O-RING 1A P-6.0	1
18	197813	BOLT M 5X 10	1
19	425-35343	NUT, GOVERNOR WEIGHT	1
	197488	NUT, GOVERNOR WEIGHT (T-ZNTBL)	1
20	197657	ACTUATOR (ZNMS AND T-ZNMS)	1
	197656	ACTUATOR (ZNTBL AND T-ZNTBL)	1
21	197658	BOLT,ECO	1
22	197767	SENSOR	1
23	197760	GEAR,SENSOR	1
24	425-34935	GASKET 12, ROUND	1
25	425-35174	PLUG M12,HEX.	1
26	197797	O-RING 1A S-48.0	1
27	197805	BOLT M 6X 25 PLATED	10
28	425-34765	BOLT M 8X 25 PLATED	3

https://truckmanualshub.com/

FUEL INJECTION VALVE

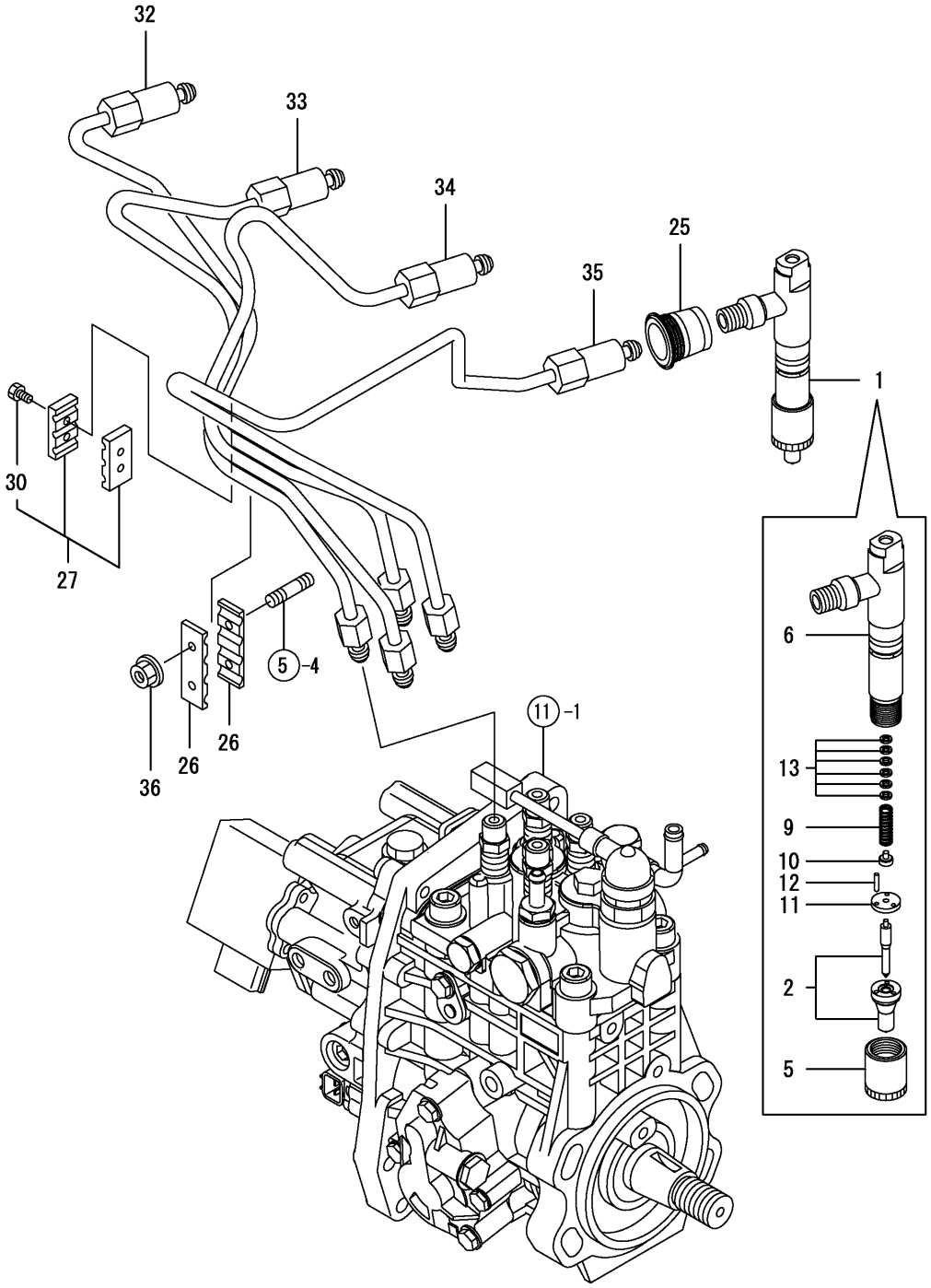

Y00W2680	13, FUEL INJECTION VALVE			
4TNV98-ZNMS	1, 07/12	2	3	PLUS

https://truckmanualshub.com/

Ref. No.	Part No.	Description	Quantity 4TNV98
1	197830	FUEL INJECTOR(RDG (ZNMS AND ZNTBL)	4
	197833	FUEL INJECTOR(RDN (T-ZNMS AND T-ZNTBL)	4
2	197645	NOZZLE ASSY (ZNMS AND ZNTBL)	4
	197691	NOZZLE ASSY (T-ZNMS AND T-ZNTBL)	4
5	425-34903	NUT, NOZZLE CASE	4
6	197646	HOLDER ASSY, NOZZLE (ZNMS AND ZNTBL)	4
	186553	HOLDER ASSY, NOZZLE (T-ZNMS AND T-ZNTBL)	4
9	425-34666	SPRING, NOZZLE	4
10	425-34905	SEAT, NOZZLE SPRING	4
11	425-34906	PLATE, STOP	4
12	188447	PIN	8
13	188448	SHIM PACK	4
25	186407	PIPE SEAL	4
26	137962	BRACKET	2
27	425-35452	RETAINER, INJ. PIPE	1
30	186473	BOLT M4X14,HEX.SCKT.	2
32	197648	PIPE ASSY, INJECTION	1
33	197649	PIPE ASSY, INJECTION	1
34	197650	PIPE ASSY, INJECTION	1
35	197651	PIPE ASSY, INJECTION	1
36	188754	NUT M 6	2

https://truckmanualshub.com/

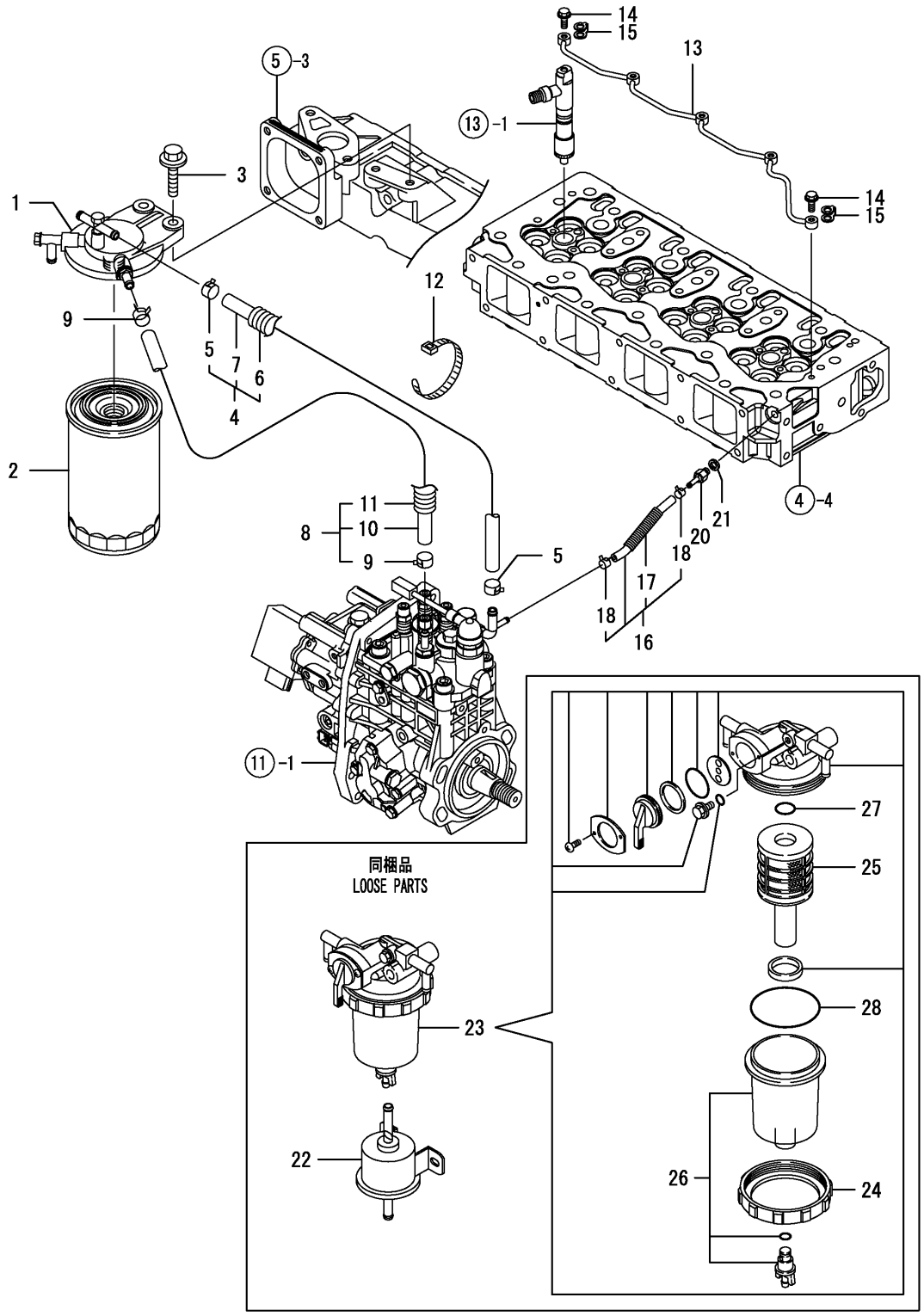

Y00W2680	14. FUEL LINE			
4TNV98-ZNMS	1. 07/12	2	3	PLUS

https://truckmanualshub.com/

Ref. No.	Part No.	Description	Quantity 4TNV98
1	186467	BRACKET,FUEL FILTER	1
2	193024	FILTER, FUEL OIL	1
3	425-34760	BOLT M 8X 30 PLATED	2
4	186478	PIPE ASSY, FUEL	1
5	425-34916	CLAMP 12	2
6	138107	PROTECTOR, FUEL PIPE	1
7	425-36289	PIPE, FUEL OIL	1
8	197746	PIPE ASSY, FUEL	1
9	425-34916	CLAMP 12	2
10	197500	PIPE, FUEL OIL	1
11	188691	TUBE	1
12	137953	CLAMP 140	1
13	186554	PIPE ASSY,F.O.RETURN	1
14	186430	JOINT BOLT M6	5
15	186431	PACKING,FUEL RETURN	5
16	197647	PIPE, FUEL RETURN	1
17	197508	CORRUGATED TUBE	1
18	186464	CLAMP 9	2
20	186432	HOSE JOINT 4	1
21	425-34750	SEAL WASHER 8S	1
22	186308	PUMP ASSY, FUEL FEED (ZNMS AND T-ZNMS)	1
	186483	PUMP ASSY, FUEL FEED (ZNTBL AND T-ZNTBL)	1
23	194317	SEPARATOR ASSY	1
24	425-34924	RING, RETAINING	1
25	186340	ELEMENT	1
26	270981	CUP ASSY(SERVICE PAR	1
27	425-34744	O-RING 1A P-16.0	1
28	425-34927	O-RING 1A G-65.0	1

https://truckmanualshub.com/

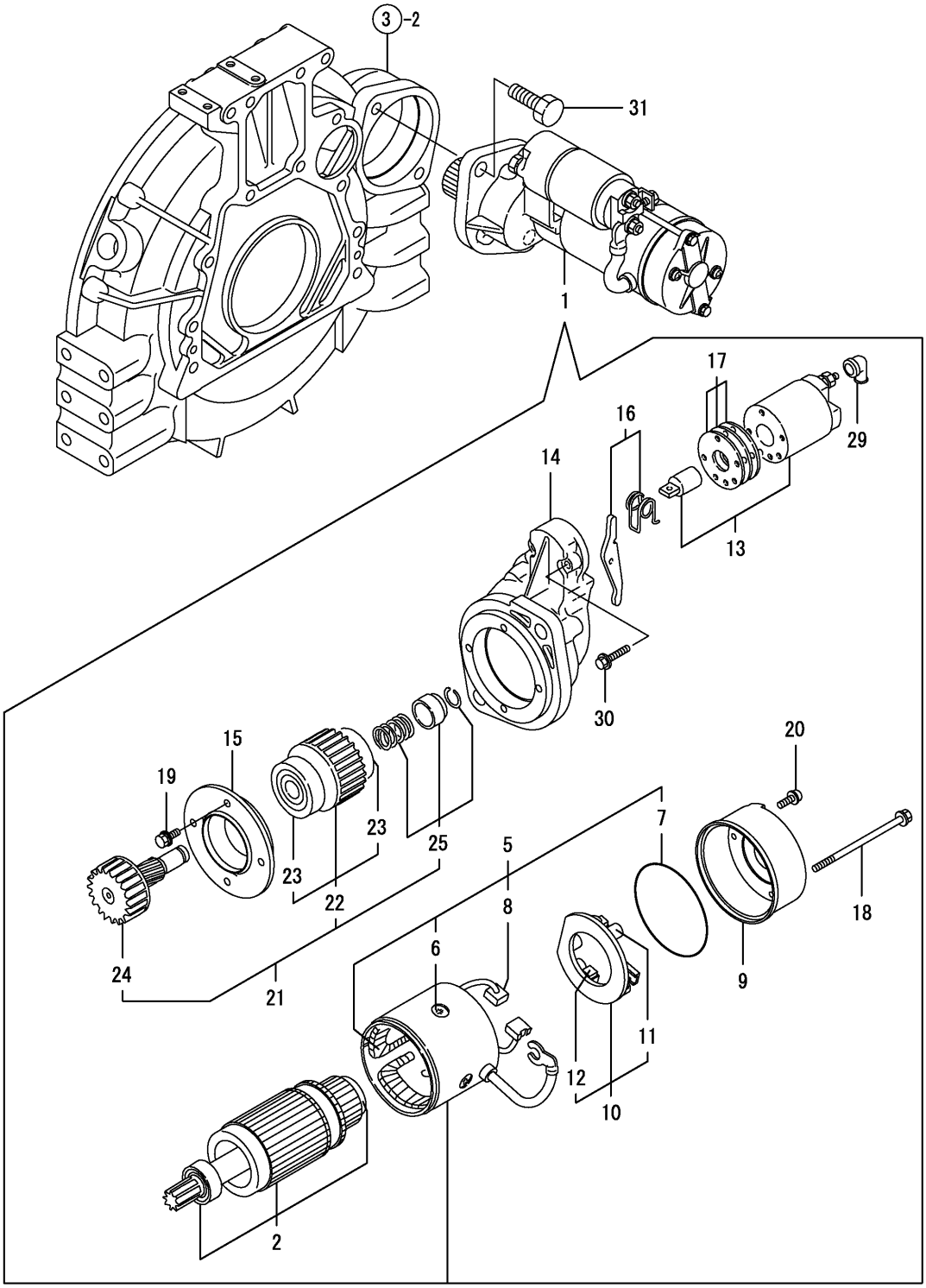

Y00W2680	15, STARTING MOTOR			
4TNV98-ZNMS	1, 07/12	2	3	PLUS

https://truckmanualshub.com/

Ref. No.	Part No.	Description	Quantity 4TNV98
1	194316	STARTER 12V,3KW	1
2	197716	ARMATURE ASSY	1
5	197717	COIL ASSY, FIELD	1
6	197718	SCREW, POLE CORE SET	4
7	197719	O-RING	1
8	197720	BRUSH (+)	2
9	197721	COVER, REAR	1
10	197722	HOLDER, BRUSH	1
11	197723	SPRING, BRUSH	1
12	197724	BRUSH (-)	2
13	197725	SWITCH ASSY,MAGNETIC	1
14	197726	HOUSING, GEARS	1
15	197727	RETAINER, BEARING	1
16	197728	SHIFT LEVER SET	1
17	197729	COVER ASSY, DUST	1
18	197730	THROUGHT BOLT	2
19	197731	BOLT M6X 20	4
20	197732	SCREW M4X 10	2
21	138056	PINION ASSY	1
22	138057	CLUTCH ASSY	1
23		BALL BEARING (3	2
24	138058	SHAFT, PINION	1
25	137930	STOPPER KIT, PINION	1
29	425-35916	TERMINAL COVER (ZNMS, T-ZNMS AND T-ZNTBL)	1
	186463	COVER, TERMINAL (ZNTBL)	1
30	197444	BOLT M 6X 37	2
31	188748	BOLT M12X 25 PLATED	2
	425-36301	BOLT M12 X 30 PLATED (T-ZNTBL)	2

https://truckmanualshub.com/

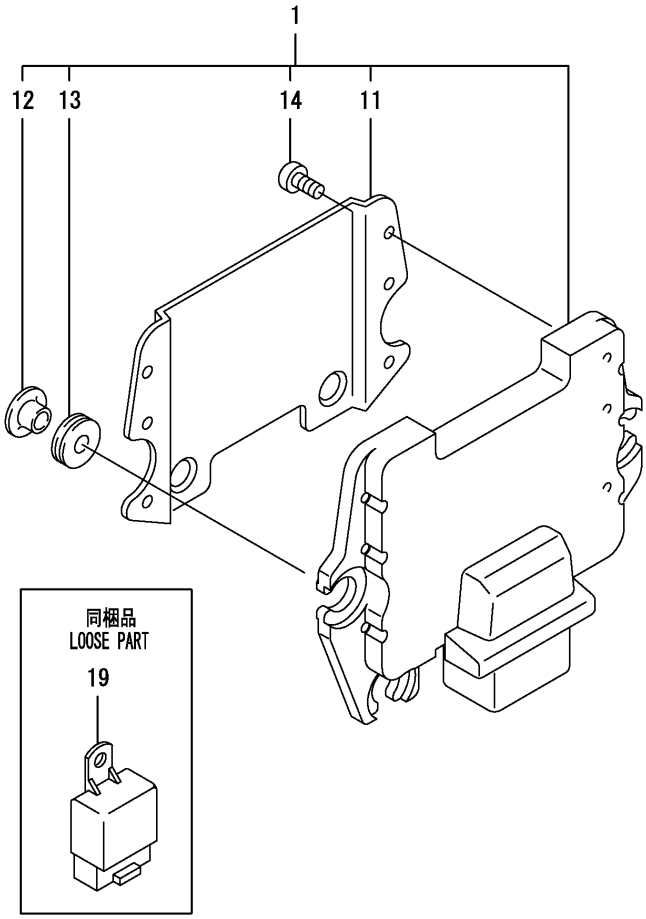

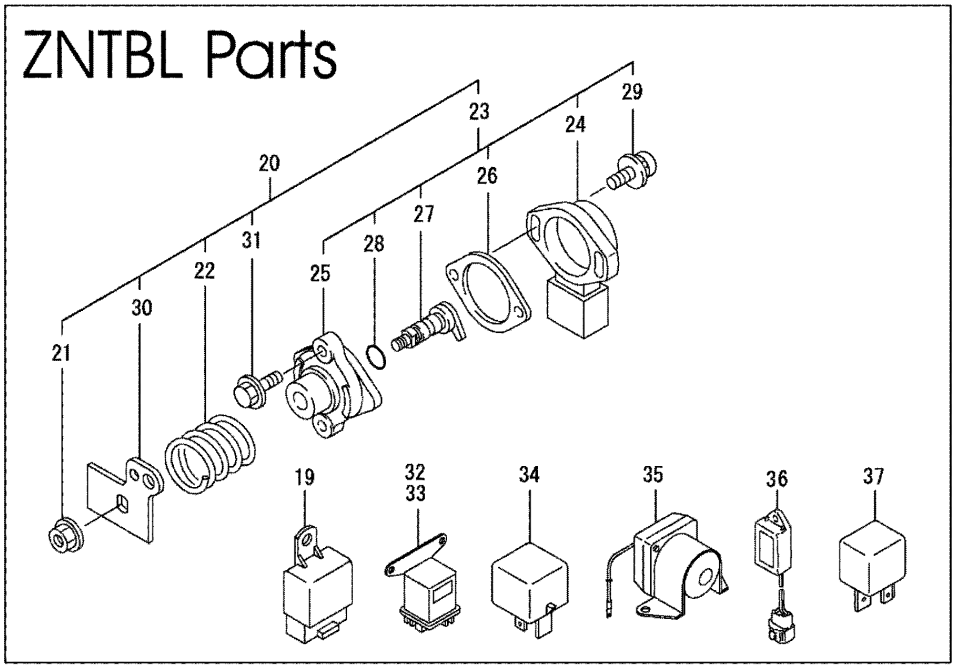

Y00W2680	16, ELECTRIC PARTS			
4TNV98-ZNMS	1, 07/12	2	3	PLUS

https://truckmanualshub.com/

Ref. No.	Part No.	Description	Quantity 4TNV98
1	197713	ECU,CMP (ZNMS)	1
	197742	ECU CMP (T-ZNMS)	1
	197714	ECU,CMP (ZNTBL)	1
	197659	ECU, CMP (T-ZNTBL)	1
11	197660	SHIELD,ECU	1
12	197661	COLLAR, CONTROLLER	3
13	197452	RUBBER, CUSHION	3
14	197788	SCREW, 5.0 X 8	6
19	193206	RELAY CA,TYPE C	2
20	197703	ACCEL SENSOR ASSY	1
21	197781	NUT W/ WASHER 6	1
22	197448	SPRING, RETURN	1
23	197493	SENSOR ASSY, ACCEL	1
24	197780	BODY	1
25	197494	SUPPORT	1
26	197495	GASKET, SUPPORT	1
27	197496	SHAFT ASSY	1
28	186607	O-RING 1A P-7.0	1
29	197804	SCREW M4X20	2
30	197704	ACCEL SENSOR LEVER	1
31	186615	BOLT M6X12 PLATED	2
32	186336	RELAY, POWER	1
33	186336	RELAY, POWER	1
34	197662	RELAY(SIO,90A	1
35	160888	RELAY, MAGNETIC	1
36	160891	TIMER	1
37	197663	RELAY(ISO,70A	1

ZNMS Engine

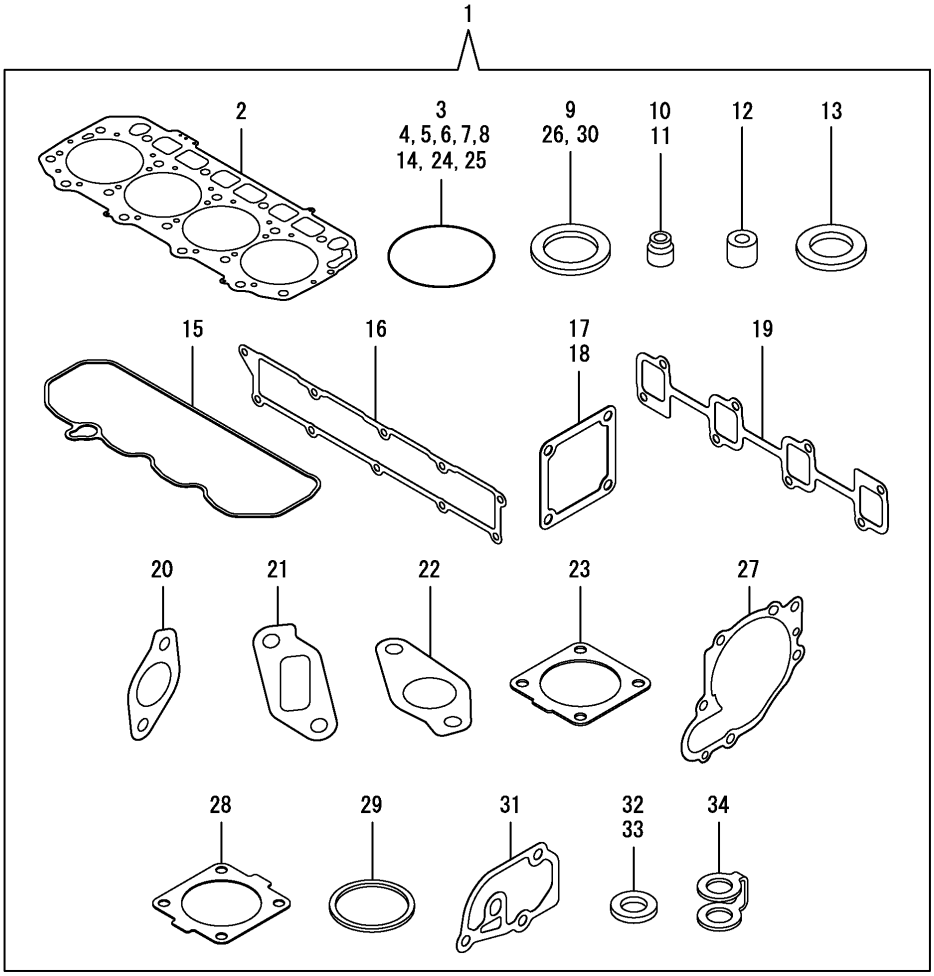

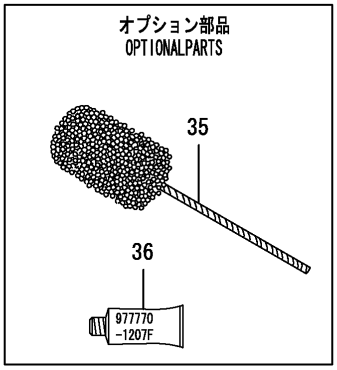

Y00W2680	17. GASKET SET				
4TNV98-ZNMS		1. 07/12	2	3	PLUS

https://truckmanualshub.com/

TOOL AND GASKET SET

Ref. No.	Part No.	Description	Quantity -ZNMS
1	197503	GASKET SET(NON-ASB.)	1
2	186513	GASKET,CYLINDER HEAD	1
3	138100	O-RING P20	2
4	138101	O-RING P14	1
5	186607	O-RING 1A P-7.0	1
6	186612	PACKING, 3075	1
7	425-34745	O-RING 1A P-32.0	2
8	138127	O-RING 1A G-85.0	1
9	138113	SEAL WASHER 22S	1
10	197472	SEAL, VALVE STEM(EXH	8
11	425-35191	SEAL, VALVE STEM(INT	8
12	186337	PROTECTOR, NOZZLE	4
13	425-34796	SEAT, NOZZLE	4
14	425-34776	O-RING 1A P 12.0	8
15	197698	GASKET, BONNET	1
16	186538	PACKING(INT.MANIFOLD	1
17	197450	GASKET	1
18	425-36318	GASKET, (NON-ASB.)	1
19	425-36128	GASKET	1
20	197627	GASKET, EGR PIPE	1
21	197629	GASKET(EGR-V IN	1
22	197630	GASKET(EGR-V OUT	1
23	138104	GASKET, SILENCER	1
24	186611	O-RING 1A S-53.0	1
25	425-34827	O-RING 1A P-10A	1
26	425-34750	SEAL WASHER 8S	9
27	425-36113	GASKET, CW-P	1
28	425-36114	GASKET, THERMOSTAT	1
29	186370	GASKET, THERMOSTAT	1
30	425-35959	SEAL WASHER 12	1
31	425-36319	GASKET, CASE	1
32	425-34727	GASKET 8, ROUND	1
33	160427	GASKET 16	2
34	186431	PACKING,FUEL RETURN	5
35	138091	FLEX HONE	1
36	138154	GASKET.LIQUID	1

https://truckmanualshub.com/

ZNTBL, T-ZNTBL and T-ZNMS Engines

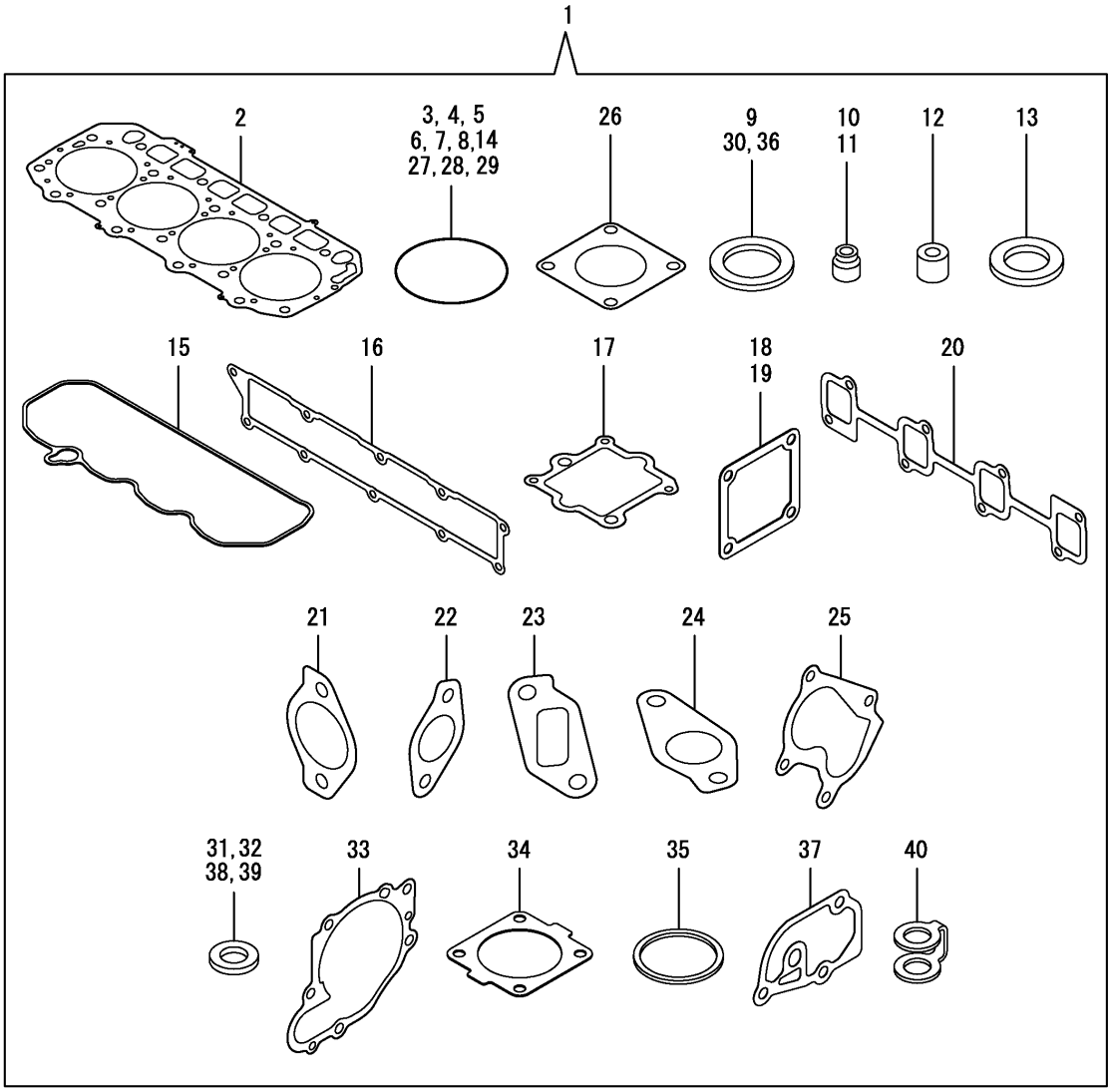

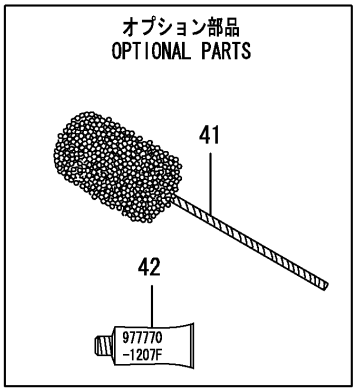

Y00W2670	19, GASKET SET			
4TNV98T-ZNMS	1, 07/12	2	3	PLUS

https://truckmanualshub.com/

Ref. No.	Part No.	Description	Quantity ZNTBL/T-ZNTBL/ T-ZNMS
1	197504	GASKET SET(NON-ASB.) (T-ZNMS)	1
	197503	GASKET SET(NON-ASB.) (ZNTBL)	1
	197871	GASKET SET(NON-ASB.) (T-ZNTBL)	1
2	186513	GASKET,CYLINDER HEAD	1
3	138100	O-RING P20	2
4	138101	O-RING P14	1
5	186607	O-RING 1A P-7.0	1
6	186612	PACKING, 3075	1
7	425-34745	O-RING 1A P-32.0 (T-ZNMS)	2
	425-34745	O-RING 1A P-32.0 (ZNTBL AND T-ZNTBL)	4
	185645	O-RING 1A P-30.0 (ZNTBL AND T-ZNTBL)	1
8	138127	O-RING 1A G-85.0	1
	186610	O-RING 1A G70.0,NBR (T-ZNTBL)	1
9	138113	SEAL WASHER 22S (T-ZNMS AND T-ZNTBL)	1
	186595	SEAL WASHER 30S (ZNTBL)	1
10	197472	SEAL, VALVE STEM(EXH	8
11	425-35191	SEAL, VALVE STEM(INT	8
12	186337	PROTECTOR, NOZZLE	4
13	425-34796	SEAT, NOZZLE	4
14	425-34776	O-RING 1A P 12.0	8
15	197698	GASKET, BONNET	1
16	186538	PACKING(INT.MANIFOLD	1
17	197679	GASKET(EGR-V SPACER	1
18	197450	GASKET	1
19	425-36318	GASKET, (NON-ASB.)	1
20	425-36128	GASKET	1
21	197676	GASKET, EGR COOLER	2
22	197627	GASKET, EGR PIPE	1
23	197629	GASKET(EGR-V IN	1
24	197630	GASKET(EGR-V OUT	1
25	138488	PK(T/C OUT	1
26	197514	GASKET (T-ZNMS)	1
	138104	GASKET, SILENCER (ZNTBL AND T-ZNTBL)	2
27	186611	O-RING 1A S-53.0	1
28	186609	O-RING 1A G-60.0	1
29	425-34827	O-RING 1A P-10A	1
30	425-34750	SEAL WASHER 8S (T-ZNMS AND T-ZNTBL)	11
	425-34750	SEAL WASHER 8S (ZNTBL)	9
31	425-34837	GASKET 10, ROUND (T-ZNMS AND T-ZNTBL)	2
	425-34707	GASKET 10 (ZNTBL)	1
32	197618	GASKET,LO-T RETURN	1
33	425-36113	GASKET, CW-P	1
34	425-36114	GASKET, THERMOSTAT	1
35	186370	GASKET, THERMOSTAT	1
36	425-35959	SEAL WASHER 12	1
37	425-36319	GASKET, CASE	1
38	425-34727	GASKET 8, ROUND	1
39	160427	GASKET 16 (T-ZNMS)	2
	160427	GASKET 16 (ZNTBL AND T-ZNTBL)	1
40	186431	PACKING,FUEL RETURN	5
41	138091	FLEX HONE	1
42	138154	GASKET.LIQUID	1

https://truckmanualshub.com/

T-ZNMS and T-ZNTBL Engines

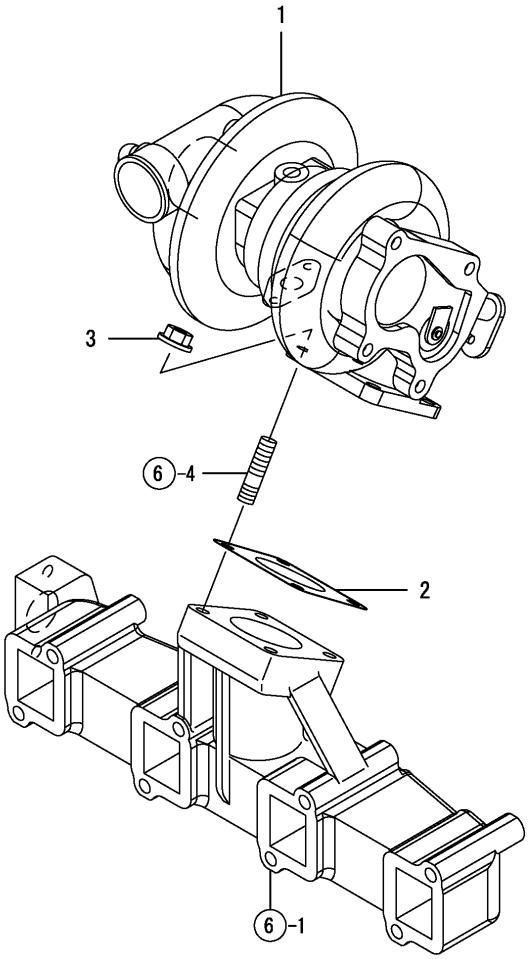

Y00W2670	8, TURBINE			
4TNV98T-ZNMS	1, 07/12	2	3	PLUS

https://truckmanualshub.com/

Ref. No.	Part No.	Description	Quantity T-ZNMS/T-ZNTBL
1	197700	TURBINE, RHF5	1
2	197514	GASKET	1
3	138140	NUT	4

https://truckmanualshub.com/

T-ZNMS and T-ZNTBL Engines

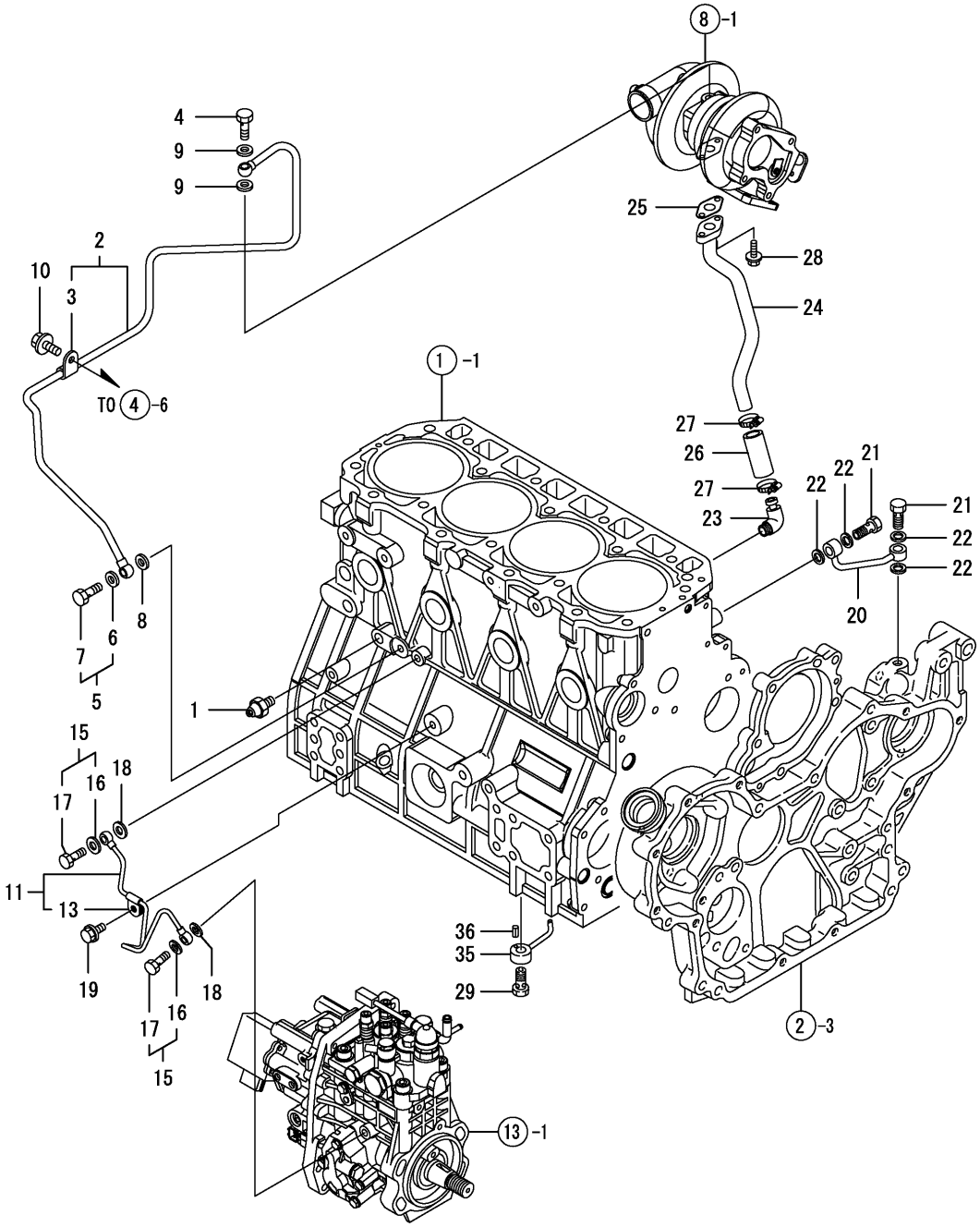

Y00W2670	11. LUB. OIL LINE				
4TNV98T-ZNMS		1. 07/12	2	3	PLUS

https://truckmanualshub.com/

LUBRICATION OIL LINE

Ref. No.	Part No.	Description	Quantity T-ZNMS/T-ZNTBL
1	425-36085	SENDER, OIL PRESSURE (T-ZNMS)	1
	425-34684	SENDER, OIL PRESSURE (T-ZNTBL)	1
2	197502	PIPE ASSY,LUB OIL (T-ZNMS)	1
	197684	PIPE ASSY,LUB OIL (T-ZNTBL)	1
3	138510	RETAINER	1
4	138471	BOLT, PIPE JOINT	1
5	186468	BOLT ASSY, JOINT	1
6	425-34750	SEAL WASHER 8S	1
7	186600	JOINT BOLT 3	1
8	425-34750	SEAL WASHER 8S	1
9	425-34837	GASKET 10, ROUND	2
10	425-34729	BOLT M 8X 12 PLATED	1
11	197633	PIPE ASSY, LUB.OIL	1
13	186421	SUPPORT,PIPE	1
15	186468	BOLT ASSY, JOINT	2
16	425-34750	SEAL WASHER 8S	2
17	186600	JOINT BOLT 3	2
18	425-34750	SEAL WASHER 8S	2
19	425-34729	BOLT M 8X 12 PLATED	1
20	186565	PIPE	1
21	186300	BOLT, PIPE JOINT	2
22	425-34750	SEAL WASHER 8S	4
23	138509	ELBOW (PT3/8)	1
24	197751	PIPE ASSY, LUB. OIL (T-ZNMS)	1
	197701	PIPE ASSY, LUB. OIL (T-ZNTBL)	1
	425-34729	BOLT M 8X 12 PLATED (T-ZNTBL)	1
	197480	RETAINER (T-ZNTBL)	1
25	197618	GASKET,LO-T RETURN	1
26	138492	HOSE	1
27	197790	CLAMP 25	2
28	425-35164	BOLT M 6X 16 PLATED	2
29	197617	VALVE ASSY, CHECK	4
35	197445	NOZZLE, PISTON JET	4
36	138117	SPRING PIN 3X10	4

https://truckmanualshub.com/

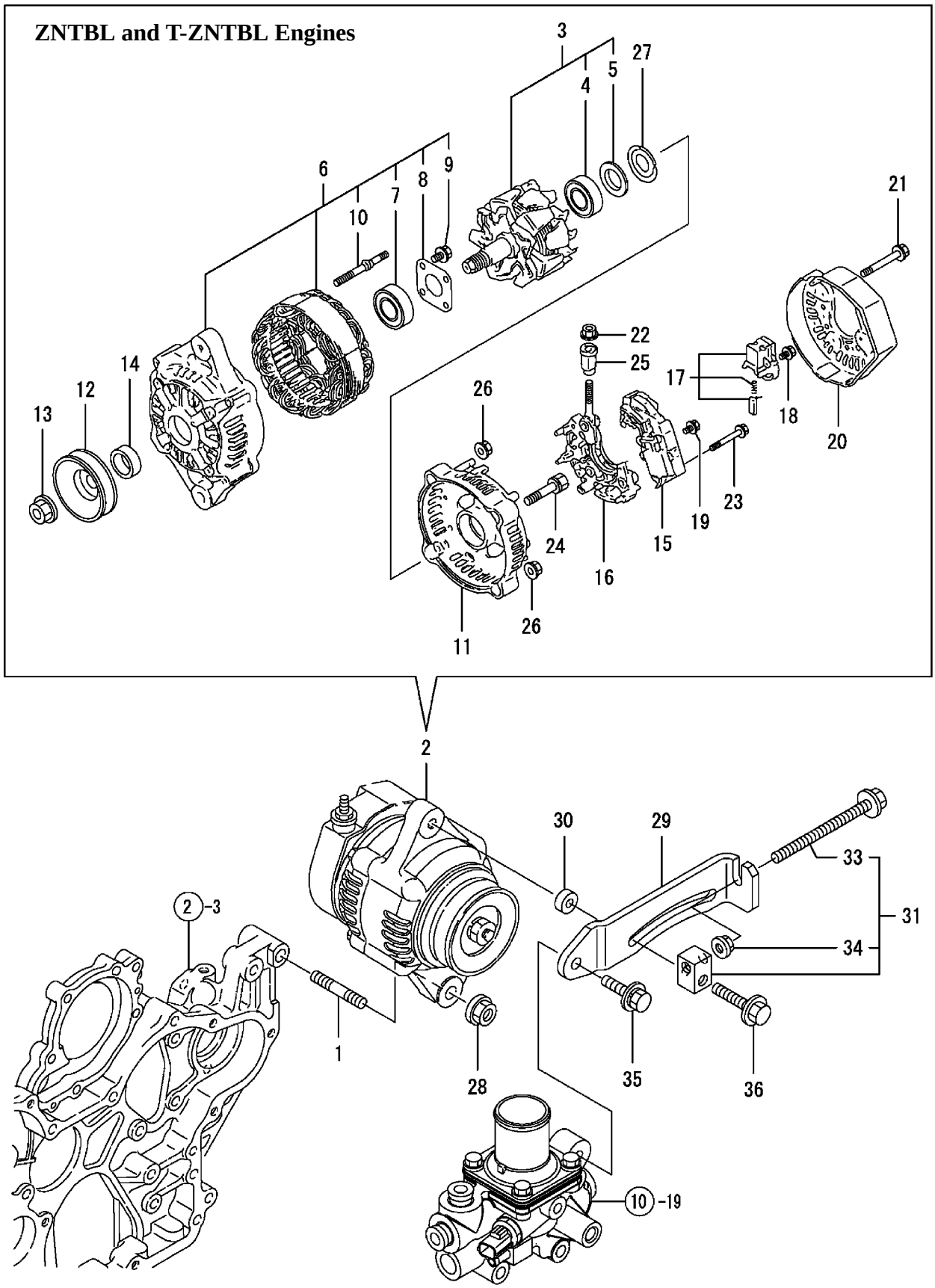

https://truckmanualshub.com/

Ref. No.	Part No.	Description	Quantity ZNTBL/T-ZNTBL
1	186484	STUD	1
2	184401	ALTERNATOR	1
3	186315	ROTOR ASSY	1
4	188508	BEARING, BALL	1
5	186325	COVER, BEARING	1
6	186316	FLAME ASSY, DRIVE	1
7	186321	BALL BEARING	1
8	186322	PLATE	1
9	186323	SCREW	4
10	186324	BOLT, STUD	2
11	186317	FLAME ASSY, REAR	1
12	186318	PULLEY	1
13	186319	NUT	1
14	186320	COLLAR	1
15	186475	REGULATOR	1
16	186326	HOLDER	1
17	186469	HOLDER, BRUSH	1
18	186327	SCREW	6
19	186328	SCREW	1
20	186476	COVER, END, RR	1
21	186329	BOLT	3
22	186477	NUT	1
23	186330	SCREW W/ WASHER	2
24	186331	BOLT	2
25	186332	INSULATION BUSH	1
26	186333	NUT	2
27	186334	THRUST WASHER	1
28	138141	NUT	1
29	197600	ADJUSTER, BELT	1
30	137950	SPACER	1
31	197453	BROCK, GENERATOR CMP	1
33	197806	BOLT 8*100	1
34	138140	NUT	1
35	425-35026	BOLT M8X25	1
36	425-34748	BOLT M8X55 PLATED	1

https://truckmanualshub.com/

SECTION NOTES

Part No.	Page No.	Ref. No.	Part No.	Page No.	Ref. No.	Part No.	Page No.	Ref. No.	Part No.	Page No.	Ref. No.
137930	44	25	138140	52	3	186332	56	25	186468	54	15
137947	4	43	138140	56	34	186333	56	26	186469	56	17
137948	4	30	138141	4	23	186334	56	27	186471	22	1
137949	4	45	138141	56	28	186335	8	61	186473	40	30
137950	56	30	138154	48	36	186336	46	32	186475	56	15
137953	28	11	138154	50	42	186336	46	33	186476	56	20
137953	30	11	138471	54	4	186337	8	25	186477	56	22
137953	42	12	138479	12	81	186337	10	29	186478	42	4
137956	24	11	138488	20	9	186337	48	12	186479	34	66
137957	24	4	138488	50	25	186337	50	12	186483	42	22
137958	24	5	138492	54	26	186340	42	25	186484	56	1
137962	40	26	138509	54	23	186343	24	21	186485	2	27
138020	22	9	138510	54	3	186358	34	71	186486	2	4
138056	44	21	138512	18	6	186359	34	68	186487	4	26
138057	44	22	138512	20	3	186360	34	67	186489	4	36
138058	44	24	138522	18	16	186361	34	70	186490	4	37
138072	28	3	160427	32	35	186370	32	22	186491	2	6
138072	30	3	160427	34	37	186370	34	25	186493	2	9
138091	48	35	160427	48	33	186370	48	29	186494	2	24
138091	50	41	160427	50	39	186370	50	35	186498	24	3
138093	28	7	160427	50	39	186371	32	23	186499	24	14
138093	30	7	160888	46	35	186371	34	26	186501	24	26
138097	22	6	160891	46	36	186375	20	6	186502	24	27
138098	24	3	183543	34	14	186388	8	55	186505	22	10
138100	4	16	184401	56	2	186389	8	56	186506	22	20
138100	26	8	184405	34	57	186390	8	57	186507	4	42
138100	28	20	185643	4	44	186391	8	58	186508	30	33
138100	30	32	185644	4	46	186401	8	35	186510	24	1
138100	48	3	185645	4	47	186401	10	39	186513	2	28
138100	50	3	185645	50	7	186406	8	3	186513	48	2
138101	4	17	186300	26	27	186406	10	5	186513	50	2
138101	48	4	186300	30	50	186407	40	25	186518	8	54
138101	50	4	186300	54	21	186410	8	21	186518	12	58
138104	18	17	186301	34	75	186410	10	25	186519	8	1
138104	20	30	186302	26	6	186411	8	20	186519	8	1
138104	48	23	186302	30	21	186411	10	24	186519	10	1
138104	50	26	186303	34	61	186421	26	19	186520	8	11
138107	42	6	186308	42	22	186421	30	43	186520	10	15
138113	6	11	186311	34	64	186421	54	13	186521	8	12
138113	48	9	186314	8	30	186430	42	14	186521	10	16
138113	50	9	186314	10	34	186431	42	15	186522	8	13
138117	54	36	186315	56	3	186431	48	34	186522	10	17
138123	32	26	186316	56	6	186431	50	40	186523	8	32
138123	34	20	186317	56	11	186432	42	20	186523	10	36
138123	34	29	186318	56	12	186442	28	8	186524	8	33
138127	4	31	186319	56	13	186442	30	8	186524	10	37
138127	48	8	186320	56	14	186443	28	10	186525	8	34
138127	50	8	186321	56	7	186443	30	10	186525	10	38
138133	4	32	186322	56	8	186451	30	17	186528	8	31
138136	30	31	186323	56	9	186461	34	69	186528	10	35
138139	4	15	186324	56	10	186463	44	29	186529	8	17
138140	8	49	186325	56	5	186464	42	18	186529	10	21
138140	12	53	186326	56	16	186466	4	27	186530	8	36
138140	18	7	186327	56	18	186466	4	38	186530	10	40
138140	18	11	186328	56	19	186467	42	1	186531	8	40
138140	18	11	186329	56	21	186468	26	21	186531	10	44
138140	20	12	186330	56	23	186468	30	44	186533	8	24
138140	20	24	186331	56	24	186468	54	5	186533	10	28

https://truckmanualshub.com/

NUMERICAL INDEX

Part No.	Page No.	Ref. No.
186534	8	27
186534	10	31
186535	8	44
186535	12	48
186538	14	1
186538	16	1
186538	48	16
186538	50	16
186539	22	2
186543	4	4
186553	40	6
186554	42	13
186563	34	60
186564	32	19
186564	34	22
186565	26	26
186565	30	49
186565	54	20
186567	18	18
186568	18	19
186569	30	17
186570	30	23
186574	30	40
186576	6	2
186578	24	12
186579	22	15
186580	30	20
186582	30	19
186582	30	25
186585	24	8
186586	4	3
186587	30	3
186590	22	17
186593	18	20
186595	30	29
186595	50	9
186596	22	18
186596	36	106
186598	8	63
186598	8	64
186598	12	63
186600	26	23
186600	30	46
186600	54	7
186600	54	17
186602	8	8
186602	10	12
186607	4	18
186607	36	109
186607	46	28
186607	48	5
186607	50	5
186609	28	13
186609	30	13
186609	50	28
186610	30	30
186610	50	8
186611	24	10
186611	48	24
186611	50	27
186612	4	19
186612	48	6
186612	50	6
186615	8	65
186615	12	64
186615	32	15
186615	34	15
186615	36	132
186615	46	31
186618	14	12
186618	16	22
186622	6	5
186623	6	6
186624	8	45
186624	12	49
186626	22	19
186626	36	117
186635	2	29
186662	24	9
186663	24	7
186664	4	35
186665	30	27
186666	30	28
186676	36	54
186678	36	30
188447	40	12
188448	40	13
188508	56	4
188567	28	5
188567	30	5
188573	4	1
188573	6	1
188596	8	38
188596	8	42
188596	10	42
188596	10	46
188632	12	71
188632	12	74
188691	42	11
188732	16	7
188732	16	8
188732	32	27
188732	34	30
188736	12	87
188742	4	29
188742	4	40
188742	8	46
188742	12	50
188742	14	11
188742	16	21
188746	8	47
188746	8	48
188746	12	51
188746	12	52
188746	32	31
188746	34	34
188748	44	31
188754	40	36
188757	2	14
192290	36	125
192292	36	123
192294	36	99
192295	36	127
192296	36	128
192297	36	102
192298	36	129
192299	36	103
193024	42	2
193206	46	19
194315	26	7
194315	28	19
194315	30	22
194316	44	1
194317	42	23
197444	44	30
197445	54	35
197446	34	61
197448	46	22
197449	12	61
197450	14	7
197450	16	17
197450	48	17
197450	50	18
197451	14	10
197451	16	20
197452	46	13
197453	56	31
197454	34	74
197459	32	34
197459	34	36
197462	18	4
197463	20	16
197469	18	1
197470	6	8
197472	8	15
197472	10	19
197472	48	10
197472	50	10
197475	12	77
197476	16	14
197477	36	71
197480	54	24
197481	28	2
197481	30	2
197482	30	26
197483	16	13
197488	38	19
197493	46	23
197494	46	25
197495	46	26
197496	46	27
197500	42	10
197502	54	2
197503	48	1
197503	50	1
197504	50	1
197507	18	2
197507	18	21
197508	42	17
197510	36	122
197514	50	26
197514	52	2
197572	12	62
197590	6	2
197591	2	32
197592	2	35
197593	4	41
197594	24	23
197595	24	30
197596	24	29
197597	22	10
197598	24	1
197599	36	56
197600	56	29
197601	8	52
197601	12	56
197602	8	53
197602	12	57
197603	8	28
197603	10	32
197604	24	9
197605	22	16
197606	30	14
197607	26	2
197607	28	15
197608	36	53
197609	20	7
197610	22	3
197611	22	3
197612	24	1
197613	24	1
197614	4	4
197615	28	1
197615	30	1
197616	28	4
197616	30	4
197617	54	29
197618	50	32
197618	54	25
197619	28	6
197619	30	6
197620	6	7
197621	8	51
197622	8	4
197624	14	2
197625	18	1
197626	18	8
197627	18	9
197627	20	18
197627	48	20
197627	50	22
197628	18	12

Part No.	Page No.	Ref. No.
197628	20	25
197629	18	13
197629	20	26
197629	48	21
197629	50	23
197630	18	14
197630	20	27
197630	48	22
197630	50	24
197631	24	17
197632	24	15
197633	26	17
197633	30	42
197633	54	11
197634	32	1
197634	34	1
197635	32	17
197635	34	17
197636	32	36
197636	34	38
197637	32	40
197637	34	42
197638	32	16
197639	36	136
197640	36	21
197641	36	31
197642	36	120
197643	36	121
197644	36	124
197645	40	2
197646	40	6
197647	42	16
197648	40	32
197649	40	33
197650	40	34
197651	40	35
197652	38	4
197653	38	3
197654	38	5
197655	38	10
197656	38	20
197657	38	20
197658	38	21
197659	46	1
197660	46	11
197661	46	12
197662	46	34
197663	46	37
197664	6	8
197665	12	68
197666	12	69
197666	12	72
197667	12	77
197668	10	2
197669	12	55
197670	10	6
197671	16	3
197672	16	2
197673	20	2
197674	20	1
197675	20	13
197676	20	14
197676	20	15
197676	50	21
197677	16	4
197678	16	5
197679	16	6
197679	50	17
197680	20	17
197681	20	19
197682	24	15
197683	26	3
197683	28	16
197684	54	2
197685	34	18
197686	34	19
197687	34	46
197688	34	51
197689	34	16
197690	36	31
197691	40	2
197692	12	77
197693	38	6
197694	34	55
197695	32	14
197695	34	14
197696	34	14
197697	4	3
197698	8	60
197698	12	60
197698	48	15
197698	50	15
197699	20	8
197700	52	1
197701	54	24
197702	34	16
197703	46	20
197704	46	30
197705	14	9
197705	16	19
197710	30	39
197711	30	52
197712	30	40
197713	46	1
197714	46	1
197716	44	2
197717	44	5
197718	44	6
197719	44	7
197720	44	8
197721	44	9
197722	44	10
197723	44	11
197724	44	12
197725	44	13
197726	44	14
197727	44	15
197728	44	16
197729	44	17
197730	44	18
197731	44	19
197732	44	20
197733	8	1
197734	30	23
197735	30	26
197737	20	2
197738	34	47
197739	24	12
197740	30	23
197741	34	16
197742	46	1
197743	26	9
197743	28	21
197744	30	26
197745	34	48
197745	34	52
197746	42	8
197747	12	79
197748	12	80
197749	12	78
197750	16	12
197751	54	24
197752	22	20
197753	6	8
197754	36	9
197760	38	23
197762	38	7
197763	38	8
197764	38	9
197765	38	11
197766	38	12
197767	38	22
197768	36	67
197769	38	2
197770	36	19
197770	36	20
197772	36	18
197773	36	52
197779	8	62
197780	46	24
197781	46	21
197782	38	13
197783	24	22
197784	38	14
197786	38	16
197788	46	14
197789	12	83
197790	28	12
197790	30	12
197790	54	27
197792	12	84
197793	32	39
197793	32	43
197793	34	41
197793	34	45
197795	38	17
197797	38	26
197800	36	111
197802	32	44
197802	34	57
197803	34	57
197804	46	29
197805	38	27
197806	56	33
197807	18	10
197807	18	15
197808	20	28
197809	20	29
197810	12	82
197813	38	18
197816	36	116
197817	36	133
197818	36	134
197826	4	33
197827	2	1
197828	24	32
197829	24	34
197830	40	1
197831	2	1
197832	24	32
197833	40	1
197834	36	1
197835	36	1
197836	36	1
197837	36	1
197870	30	14
197871	50	1
270970	28	28
270970	32	32
270981	42	26
425-34656	22	4
425-34666	40	9
425-34684	30	41
425-34684	54	1
425-34707	34	65
425-34707	50	31
425-34722	2	5
425-34727	32	29
425-34727	34	32
425-34727	48	32
425-34727	50	38
425-34729	6	12
425-34729	12	86
425-34729	26	14
425-34729	26	25
425-34729	28	26
425-34729	30	38
425-34729	30	48
425-34729	32	30
425-34729	34	33
425-34729	34	56
425-34729	54	10

https://truckmanualshub.com/

NUMERICAL INDEX

Part No.	Page No.	Ref. No.
425-34729	54	19
425-34729	54	24
425-34733	4	20
425-34733	4	28
425-34733	4	39
425-34733	8	2
425-34733	10	3
425-34733	18	22
425-34733	20	10
425-34733	22	8
425-34733	26	5
425-34733	26	15
425-34733	28	18
425-34733	28	27
425-34736	34	63
425-34740	4	24
425-34740	8	50
425-34740	12	54
425-34744	42	27
425-34745	4	25
425-34745	8	68
425-34745	12	67
425-34745	48	7
425-34745	50	7
425-34745	50	7
425-34746	4	21
425-34746	10	4
425-34746	18	23
425-34746	20	11
425-34746	36	137
425-34747	4	22
425-34747	14	5
425-34747	16	10
425-34747	20	21
425-34747	34	62
425-34748	20	22
425-34748	22	14
425-34748	32	13
425-34748	34	13
425-34748	56	36
425-34750	26	22
425-34750	26	24
425-34750	26	28
425-34750	30	45
425-34750	30	47
425-34750	30	51
425-34750	42	21
425-34750	48	26
425-34750	50	30
425-34750	50	30
425-34750	54	6
425-34750	54	8
425-34750	54	16
425-34750	54	18
425-34750	54	22
425-34756	6	4
425-34760	36	138
425-34760	42	3
425-34761	20	20
425-34761	34	62
425-34765	38	28
425-34766	30	31
425-34772	12	76
425-34775	8	66
425-34775	12	65
425-34776	8	29
425-34776	8	67
425-34776	10	33
425-34776	12	66
425-34776	48	14
425-34776	50	14
425-34779	8	10
425-34779	10	14
425-34780	14	4
425-34780	16	9
425-34783	2	10
425-34791	8	19
425-34791	8	39
425-34791	8	43
425-34791	10	23
425-34791	10	43
425-34791	12	47
425-34796	8	26
425-34796	10	30
425-34796	48	13
425-34796	50	13
425-34800	14	6
425-34800	16	11
425-34810	22	7
425-34810	24	6
425-34813	22	13
425-34825	26	1
425-34825	28	14
425-34825	30	15
425-34827	26	4
425-34827	28	17
425-34827	30	16
425-34827	48	25
425-34827	50	29
425-34837	50	31
425-34837	54	9
425-34851	32	33
425-34851	34	35
425-34854	34	72
425-34892	36	108
425-34903	40	5
425-34905	40	10
425-34906	40	11
425-34916	42	5
425-34916	42	9
425-34924	42	24
425-34927	42	28
425-34935	38	24
425-34968	36	131
425-34969	38	15
425-35026	56	35
425-35164	54	28
425-35165	32	12
425-35165	34	12
425-35174	36	100
425-35174	38	25
425-35188	8	14
425-35188	10	18
425-35189	8	22
425-35189	10	26
425-35191	8	16
425-35191	10	20
425-35191	48	11
425-35191	50	11
425-35263	36	112
425-35273	34	73
425-35343	38	19
425-35452	40	27
425-35916	44	29
425-35705	36	113
425-35772	20	23
425-35959	32	25
425-35959	34	28
425-35959	36	98
425-35959	36	105
425-35959	36	130
425-35959	48	30
425-35959	50	36
425-36085	26	16
425-36085	54	1
425-36113	32	11
425-36113	34	11
425-36113	48	27
425-36113	50	33
425-36114	32	21
425-36114	34	24
425-36114	48	28
425-36114	50	34
425-36120	6	8
425-36121	6	9
425-36128	18	3
425-36128	20	5
425-36128	48	19
425-36128	50	20
425-36131	16	15
425-36133	16	16
425-36249	18	5
425-36249	20	4
425-36260	2	11
425-36260	2	12
425-36260	2	13
425-36260	8	9
425-36260	10	13
425-36260	12	85
425-36289	42	7
425-36301	44	31
425-36318	14	8
425-36318	16	18
425-36318	48	18
425-36318	50	19
425-36319	32	28
425-36319	34	31
425-36319	48	31
425-36319	50	37

TORQUE SPECIFICATIONS

Use these torque values when tightening hardware (excluding locknuts, and self-tapping, thread-forming, and sheet metal screws) unless otherwise specified.

UNIFIED NATIONAL THREAD	GRADE 2		GRADE 5		GRADE 8	
	DRY	LUBED	DRY	LUBED	DRY	LUBED
8-32	19*	14*	30*	22*	41*	31*
8-36	20*	15*	31*	23*	43*	32*
10-24	27*	21*	43*	32*	60*	45*
10-32	31*	23*	49*	36*	68*	51*
1/4-20	66*	50*	9	75*	12	9
1/4-28	76*	56*	10	86*	14	10
5/16-18	11	9	17	13	25	18
5/16-24	12	9	19	14	25	20
3/8-16	20	15	30	23	45	35
3/8-24	23	17	35	25	50	35
7/16-14	32	24	50	35	70	55
7/16-20	36	27	55	40	80	60
1/2-13	50	35	75	55	110	80
1/2-20	55	40	90	65	120	90
9/16-12	70	55	110	80	150	110
9/16-18	80	60	120	90	170	130
5/8-11	100	75	150	110	220	170
5/8-18	110	85	180	130	240	180
3/4-10	175	130	260	200	380	280
3/4-16	200	150	300	220	420	320
7/8-9	170	125	430	320	600	460
7/8-14	180	140	470	360	660	500
1-8	250	190	640	480	900	680
1-12	270	210	710	530	1000	740

METRIC COARSE THREAD	GRADE 8.8		GRADE 10.9		GRADE 12.9	
	DRY	LUBED	DRY	LUBED	DRY	LUBED
M6-1	8	6	11	8	13.5	10
M8-1.25	19	14	27	20	32.5	24
M10-1.5	37.5	28	53	39	64	47
M12-1.75	65	48	91.5	67.5	111.5	82
M14-2	103.5	76.5	145.5	108	176.5	131
M16-2	158.5	117.5	223.5	165.5	271	200

*All torque values are in ft-lbs except those marked with an * which are in lbs.
For metric torque value (N·m) multiply ft-lbs value by 1.355 or the in-lbs value by 0.113.

https://truckmanualshub.com/

Gehl Company 143 Water Street, P.O. Box 179, West Bend, WI 53095-0179 USA
www.gehl.com

917304/CP0709

© 2009 GEHL COMPANY
All Rights Reserved.

PRINTED IN USA