https://truckmanualshub.com/

KOBELCO

Performance X Design

Multi-dismantling machine

SK140SRD

SK140SRD-7

DRIVEN BY PASSION

US EPA Tier IV Final

EU (NRMM) Stage IV

Japanese Regulations

https://truckmanualshub.com/

Performance X Design

PERFORMANCE — Improved power and speed, thru the pursuit of efficiency and productivity.

DESIGN — An operator-first design with no compromises on ease of use and comfort.

By combining these two principles, KOBELCO has achieved their goal of creating a unique and specialized machine for the auto recycling industry, that is both compact and nimble, yet quick and strong. A machine that can work hard every day and take on the challenges it was built for.

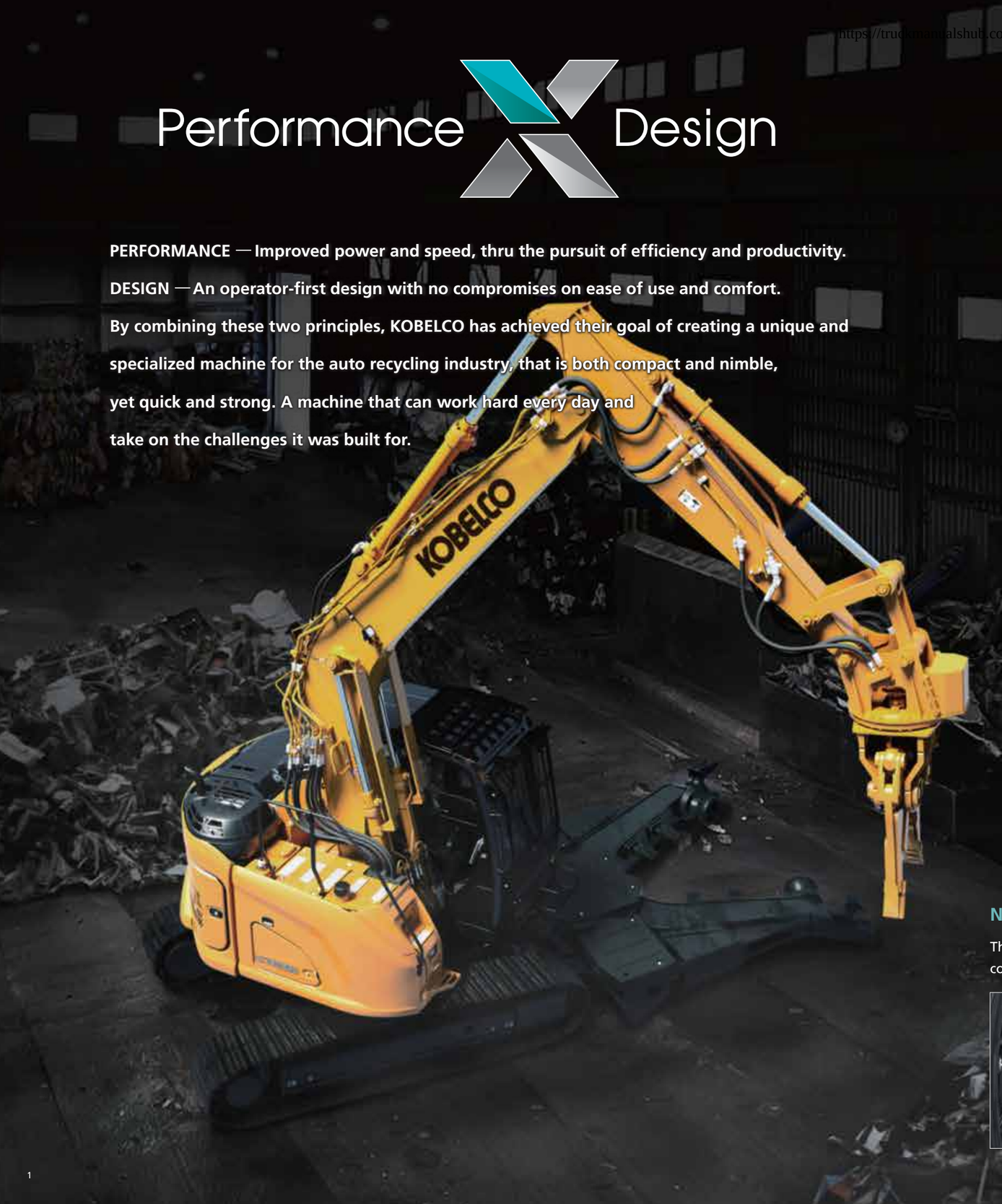

To the Next Level of Power and Functional Aesthetics

A High-Output Engine Compliant with the Newest Regulations

A significant increase in engine output allows for better performance and smother operation for lifting and pulling applications.

Model: ISUZU 4JJ1XDRAC-01

Engine Output

96 hp {71.5 kW} / 2,000 rpm (SAE NET)

Large Easy-to-See 10-Inch Color Monitor

Important information is easy to read, and operations can be performed from a simple menu screen. The camera can also be easily checked from the large screen, contributing to safe operation.

A Jog Dial for Simple Operation

Multiple operations can be performed with the jog dial. They can be performed by simply turning, selecting, pushing, and confirming while navigating through the dial display.

Advanced LED Backlight

Switches and dials utilize LED backlighting. This increases visibility at night and improves the ambiance of the interior.

New Tilting Console for Ease of Entry and Exit

The left console has a safety lever to raise the console at a steep angle for ease of access and exit.

Automatic LED Door Light

The cab is equipped with a bright LED light that automatically lights up when the door is opened or when the key is turned off.

Variety and Individuality. All Parts of the Body are Specialized for Auto Recycling Work.

HD Arm for Auto Recycling
Dedicated reinforced HD arm

Multi-Use Dismantling Nibbler
Lightweight design allows for fine movements. Strong but narrow jaws designed to securely grab and hold on with cutting blades that can separate or downsize material.

Clamp Arm
Used to hold down large objects or secure smaller objects for dismantling in conjunction with the nibbler tool.

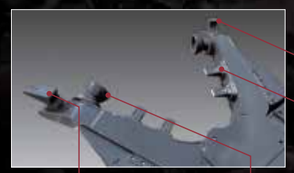

Puller
Used to remove harness wire from instrument cluster and circuit boards

Grip
Used to hold car or dash for dismantling

Teeth
Allows objects to be crushed or cut

Anchor
Used to bend long objects

Boom Holding Valve
Prevent boom from falling if hose is damaged.

Arm Holding Valve
Prevent arm from falling if hose is damaged.

HD Boom for Auto Recycling
Dedicated reinforced HD boom.

Boom Cylinder Cover
Prevents damage to the cylinder rod.

Boom Foot Cover / Center Cover
Prevent material from building up around the cab.

Cab for Auto Recycling
The large skylight glass is equipped with a FOPS level Ⅱ top guard.

<Dedicated Equipment>
- 2 piece opening wire mesh guard with a holder for work boots
- FOPS Level Ⅱ top guard
- Air suspension seat
- Adjustable height operator controls
- Cab entry step

Heavy Counterweight
For maintaining balance while lifting heavy loads.

Dismantling Process Flow Chart
How the Car Dismantling Process Works

1. Collecting Fuel, Fluids and Chlorofluorocarbon Gas
Remove fluids such as fuel, anti freeze, oils and chloroflurocarbon gas

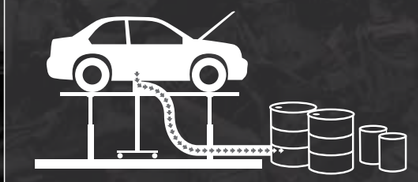

2. Parts Collection
Efficiently collect reusable parts

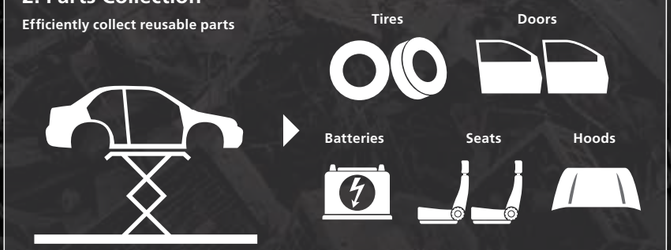

3. Car Dismantling Process

After pre-processing, the car is sorted into raw components such as ferrous, non-ferrous and plastics

3. Processes After Removing Parts
Once thoroughly cleaned, the parts become good quality recycled parts

4. Volume Reduction Processes
After treating, the scrap cars are cut up and crushed or pressed into materials that meet industry needs

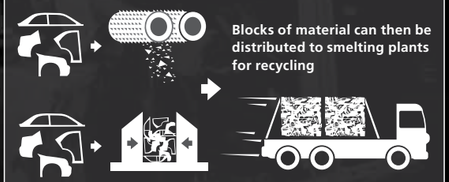

Blocks of material can then be distributed to smelting plants for recycling

A Multi-Dimensional Approach for Improved Reliability and Durability

HD Boom for Auto Recycling

A new HD boom was developed specifically for auto recycling that uses thick plating and reinforced materials.

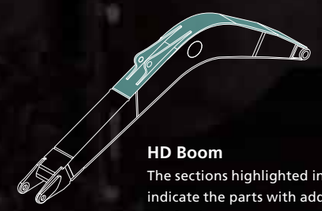

HD Boom
The sections highlighted in green indicate the parts with additional reinforcing.

HD Arm for Auto Recycling

A new HD arm was developed specifically for auto recycling that has a reinforced lower plate and stronger design.

HD Arm
The sections highlighted in green indicate the parts with additional reinforcing.

Dedicated Frame for Auto Recycling

Due to the heavy counterweight and clamp arm of this machine, the swing area is redesigned and strengthened for longevity.

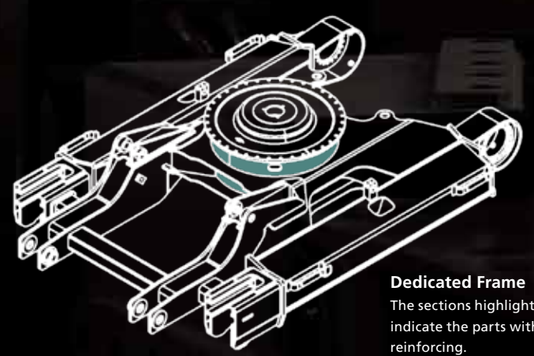

Dedicated Frame
The sections highlighted in green indicate the parts with additional reinforcing.

Damage-Resistant Center Cover for the Clamp Arm

The strength was improved by using a thicker plate and changing the shape of the center cover that protects the opening/closing mechanism for the clamp arm.

Equipment - Center Cover / Boom Foot Cover

Stops metal fragments from entering the machine from the foot of the boom and prevents damage to the hydraulic system.

Center Cover

Boom Foot Cover

Renewed Usability and Comfort, Improved Work Efficiency

Air Suspension Seat

GRAMMER air suspension seat is standard. It has superior shock absorption and can be used for long periods of time and reducing fatigue.

Equipment that Improves Time Spent in the Cab

Smartphone Holder

12 V Power Supply / USB Port

FM / AM Bluetooth® (hands free) Radio

*"Bluetooth®" is a registered trademark of the Bluetooth SIG Inc.

Proportional Controlled Hydraulics

The nibbler open/close and rotate functions are controlled by proportional slides on the joysticks that allow for smooth and precise movement. Fine movements can be easily performed, and clamp-arm movements can be performed simultaneously in combination with the foot pedal for increased work efficiency.

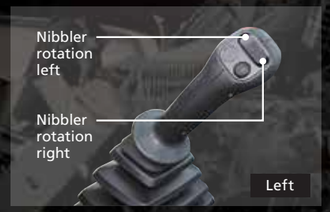

Superior Stability

580kg of weights in addition to the counterweights are included as standard equipment. Higher stability means less rocking of the body and more efficient operation.

Increased Lifting Power

The lifting power has been increased to allow smoother operation with larger loads.

A New Hydraulic Control System with Improved Operability

Compared to previous models, the shorter stroke lever allows for quick and accurate movements.

Functions and Equipment Designed for the Protection of Operators and Workers

Cab-Interference Prevention Device that Prevents Nibbler from Contacting Cab

Angle sensors in the boom, arm, and idler link calculate the position and orientation of the multi-use dismantling nibbler. If the nibbler gets close to the cab, a warning will be displayed on the screen, and it will automatically stop if it enters the interference-danger zone.

Boom-Angle Sensor

Arm-Angle Sensor

Bucket-Angle Sensor

Cab Interference Warning

Cab for Auto Recycling that Includes a Top Guard

A new cab with a front wiper and a large, glass skylight for a wide upper view. Standard equipment consists of a 2 piece wire mesh guard that opens for easy cleaning of the front window, and another guard on the top. The front and right-side windows have shatter resistant film applied to help protect the operator.

A Front-Side Polycarbonate Guard is Available as an Option.

This high-strength guard can block even small fragments. It has scratch resistance to maintain a clear view. Must be ordered with HD bar guard.

Stand-Out KOBELCO-Exclusive Technology on Auto Recycling Work Sites

Great Dust and Heat Protection

The iNDr filter stops dust from entering the machine, preventing radiator clogs and maintaining cooling performance. The iNDr filter has a shape that does not clog easily, and it can be used for long periods of time without overheating.

Superior Maintainability

Daily maintenance of the iNDr filter consists of simply a visual check. Cleaning is only necessary when significantly dirty. The filter can be easily removed without the need for tools, reducing the burden on workers and the time required for cleaning.

Impressively Quiet

The sound of the engine and cooling fan is reduced in the cab, and the unique absorptive structure results in a quiet environment for the operator. When machine is operating, the noise directed up and away from the cab and outside noise is minimized resulting in a less stressful environment for the operator.

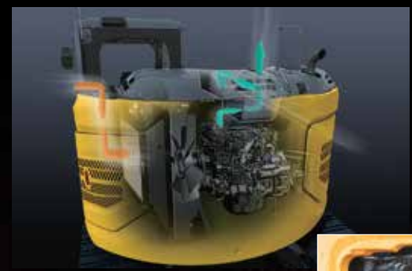

The high-density mesh iNDr filter has a wave-shaped screen design which is resistant to clogging.

Equipment Designed Specifically for Auto Recycling

Bottom Cover of the Upper Body

Prevents objects from piercing the excavator from the bottom and protects internal components.

Under Cover of the Lower Body

The bottom surface of the lower car body is equipped with a steel-plate cover that protects the hydraulic travel system.

Boom Cylinder Guard

A steel-plate guard is equipped to protect the boom cylinder rod from damage.

Ground level DEF tank

DEF tank positioned for filling from the ground.

Work Boot Tray

This space was added to hold work boots in order to keep the floor of the cab clean.

Public Address System

Operator is able to alert ground workers without taking their hands off the machine controls.

Step

Equipped with a large step to make entering or exiting the cab easy.

Remote Fuel Drain Valve

Allows for easy fuel draining if required.

Better Visibility for Better Safety

LED Lights for Improving Work Visibility

The excavator is equipped with bright LEDs on both sides of the boom, in 2 places on the top of the cab, and on the upper right of the body to ensure excellent work visibility when working at night, during dusk, or when working inside.

2 Lights On the Boom

2 Lights On the Cab

Working Light On the Upper Body

Rear Left and Right Side Images and Right Side Images / Three Side View

The body has cameras on the rear, right, and left sides. The large color monitor can be used to check the safety of the rear and right sides which cannot be seen directly. Selectable camera displays include the simultaneous rear-and right-side (direct or right-rotated) view, the simultaneous top-down rear and right side view, and the three sided view, which adds the left and shows all three directions simultaneously.

Top-Down View

Three Sided View

Rear Camera

Left Camera

Right Camera

https://truckmanualshub.com/

Specifications

Engine

Model	ISUZU 4JJ1XDRAC-01
Type	4 cycle, water cooled, overhead camshaft, vertical in-line, direct injection type, with turbocharger, Tier IV Final certified.
No. of cylinders	4
Bore and stroke	3.8" {95.4 mm} x 4.1" {104.9 mm}
Displacement	183.0 cu.in {2,999 ml}
Power output	96 hp {71.5 kW} / 2,000 rpm (SAE NET)
	105 hp {78.5 kW} / 2,000 rpm (Without fan)
Max. torque	261 lb-ft {354 N•m} / 1,800 rpm (SAE NET)
	277 lb-ft {375 N•m} / 1,800 rpm (Without fan)

Hydraulic System

Pump	
Type	Double variable displacement axial piston pumps with a gear pump
Max. discharge flow	2 x 34 U.S.gpm {2 x 130 L/min}
	1 x 15.8 U.S.gpm {1 x 59.8 L/min}
Relief valve setting	
Excavating circuits (main)	4,970 psi {34.3 MPa}
Travel circuit	4,970 psi {34.3 MPa}
Swing circuit	4,060 psi {28.0 MPa}
Pilot control circuit	725 psi {5.0 MPa}
Nibbler (Crusher) circuit	Open & Close 3,553 psi {24.5 MPa} Rotation 2,988 psi {20.6 MPa}
Clamp arm circuit	Open & Close 3,553 psi {24.5 MPa} Up&Down 3,553 psi {24.5 MPa}
Main control valve	12-spool
Oil cooler	Air cooled type

Swing System

Swing motor	Axial piston motor
Parking brake	Wet multiple plate
Swing speed	11.0 rpm
Swing torque	29,800 lb-ft {40.4 kN-m} (SAE)
Tail swing radius	5'3" {1,610 mm}
Min. front swing radius	7'4" {2,240 mm}

Hydraulic P.T.O.

Nibbler	Max.pressure 3,553 psi {24.5 MPa} Max.flow(0 pressure) 34 U.S.gpm {130 L/min}/2,000 rpm
Rotation	Rotation 2,988 psi {20.6 MPa} Max.flow(0 pressure) 15.8 U.S.gpm {59.8 L/min}/2,000 rpm

Travel System

Travel motors	Variable displacement axial piston, two-speed motors
Travel brakes	Hydraulic brake
Parking brakes	Wet multiple plate
Travel shoes	44 each side
Travel speed	2.1 / 3.5 mph {3.4 / 5.6 km/h}
Drawbar pulling force	31,100 lbs {138 kN}
Gradeability	70% {35°}

Cab & Control

Cab
All-weather, sound-suppressed steel cab mounted on the silicon-sealed viscous mounts and equipped with a heavy, insulated floor mat.
Control
Two hand levers and two foot pedals for travel
Two hand levers and two foot pedals for operation
Rotary-type electric throttle

Refilling Capacities & Lubrications

Fuel tank	49.1 U.S.gal {186 L}
Cooling system	4.5 U.S.gal {17 L}
Engine oil	4.5 U.S.gal {17 L}
Travel reduction gear	2 x 0.6 U.S.gal {2 x 2.1 L}
Swing reduction gear	0.4 U.S.gal {1.65 L}
Hydraulic oil tank	23.7 U.S.gal {89.9 L} tank oil level
	50.7 U.S.gal {192 L} hydraulic system
DEF/AdBlue tank	5.5 U.S.gal {20.7 L}

Operating Weight & Ground Pressure

Shoe width	19.7" {500 mm}
Ground pressure	9.3 psi {64 kPa}
Operating weight	45,000 lbs {20,400 kg}

Front Attachment

Model		KHE750PR-2
Weight		2,138 lbs {970 kg}
Shearing force(blade center)		57,330 lbf {255 kN}
Crushing force(tooth-jaw tip)		19,850 lbf {88.3 kN}
Operating pressure	open/close	3,553 psi {24.5 MPa}
	rotation	2,988 psi {20.6 MPa}

KHE750PR-2

(Unit : ft-in {mm})

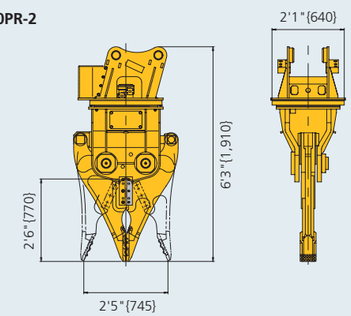

Dimensions

(Unit : ft-in {mm})

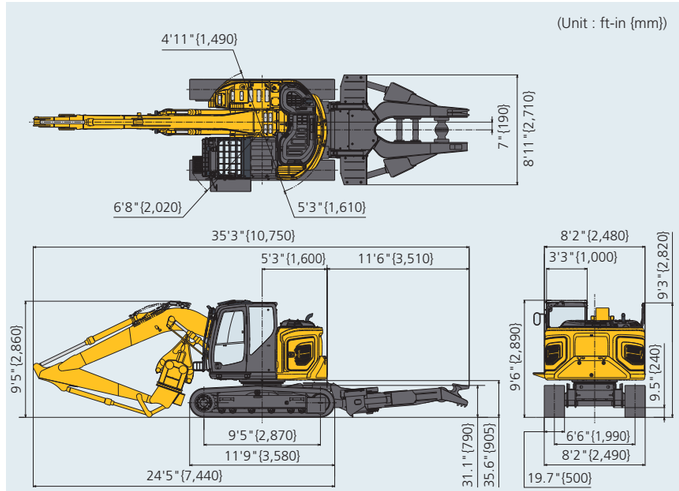

Working Ranges

(Unit : ft-in {mm})

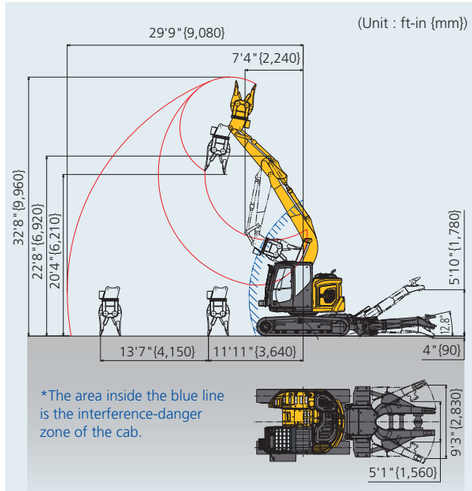

*The area inside the blue line is the interference-danger zone of the cab.

Standard Equipment

ENGINE

- ISUZU 4JJ1XDRAC-01 diesel engine with turbocharger and intercooler, Tier IV Final certified
- Auto Idle Stop
- Automatic engine deceleration
- Two 12 volt 88Ah batteries
- 24V-4kW starter
- 50-amp alternator
- Engine oil pan drain valve
- Two-stage air filter
- Proportionate engine accelerate
- Removable radiator clean out screen
- Automatic low engine oil pressure shut down
- Side by side oil, hydraulic and engine coolers

HYDRAULIC

- Hydraulic oil cooler
- Hydraulic oil filter condition indicator
- Rotation and Nibbler circuits and piping

SWING SYSTEM & TRAVEL SYSTEM

- Swing rebound prevention system
- Two-speed travel with automatic shift down
- Sealed & lubricated track links
- 19.7" {500mm} track shoes
- Grease-type track adjusters
- Automatic swing brake
- Tracks are pre-drilled for rubber pads

MIRRORS & LIGHTS

- Three rearview mirrors and rearview camera and side view cameras
- Three LED lights (1 on uppercarriage, 2 on cab)
- Two boom mounted LED work lights
- Swing flashers

CAB & CONTROL

- Two Hand Control Proportional levers, pilot-operated
- Electric horn
- Pattern changer
- Cab door light (interior)
- Coat hook
- Large cup holder
- Detachable two-piece floor mat
- Air suspension seat with armrests
- Retractable 3-inch seatbelt
- Cab entry and engine access handrails
- Heater and A/C
- Intermittent windshield wiper with double-spray washer
- Sky light
- Top guard level II (Meets ISO10262)
- Tinted safety glass and shatterproof film
- Pull-type front window and removable lower front window
- Easy-to-read 10-inch LED SCREEN (Multi display monitor)
- Automatic climate control

CAB & CONTROL

- Emergency escape hammer
- Radio (AUX & Bluetooth®)
- 12V converter
- Handsfree Bluetooth calling
- USB charging port
- Control pattern changer (2-way)
- Cab entry step

GUARDING & SAFETY

- Front guard(wire mesh 2 piece guard that opens for cleaning)
- Boom & arm cylinder holding valve
- Cab interference prevention system
- 0.35"(9mm) thick swivel guard
- 0.24"(6mm) thick upper frame under cover guards
- Boom cylinder guards
- Work boot tray
- Public address system
- KOMEXS

Optional Equipment

- Front guard (bar style guard)
- Poly-carbonate window guard (for use with bar style guard)

Note: Standard and optional equipment may vary. Consult your KOBELCO dealer for specifics.
Bluetooth® is a registered trademark of the Bluetooth SIG Inc.

https://truckmanualshub.com/

Total Support for Machines with Network Speed and Accuracy

KOMEXS is a telematics system for receiving machine information. Manage your machines anywhere in the world using the Internet. Location, workload and diagnostic data aid business operations.

Direct Access to Operational Status

Location Data

Accurate location data can be obtained even from sites where communications are difficult.

Fuel Consumption Data

Data on fuel consumption and idling times can be used to indicate improvements in fuel consumption.

Operating Hours

A comparison of operating times of machines at multiple locations shows which locations are busier and more profitable. Operating hours on site can be accurately recorded, for running time calculations needed for rental machines, etc.

Graph of Work Content

The graph shows how working hours are divided among different operating categories, including digging, idling, traveling, and optional operations (N&B).

Maintenance Data and Warning Alerts

Machine Maintenance Data

Provides maintenance status of separate machines operating at multiple sites. Maintenance data is also relayed to KOBELCO service personnel, for more efficient planning of periodic servicing.

Security System

Engine Start Alarm

Sends a notification if the engine is started outside of pre-defined hours.

Area Alarm

Sends a notification if the machine leaves a pre-defined area.

Note: This catalog may contain attachments and optional equipment that are not available in your area. And it may contain photographs of machines with specifications that differ from those of machines sold in your areas. Please consult your nearest KOBELCO distributor for those items you require. Due to our policy of continuous product improvements all designs and specifications are subject to change without advance notice.

Copyright by **KOBELCO CONSTRUCTION MACHINERY CO., LTD.** No part of this catalog may be reproduced in any manner without notice.

KOBELCO CONSTRUCTION MACHINERY U.S.A. INC.

22350 Merchants Way, Katy, TX77449
Tel: 281-888-8430 Fax: 281-506-8713
www.KOBELCO-USA.com

Inquiries To:

KOBELCO is the corporate mark used by Kobe Steel on a variety of products and in the names of a number of Kobe Steel Group companies.

Multi-dismantling machine SK140SRD-7-NA-101-2011E