https://truckmanualshub.com/

UTILEV®

2T-3.5T Internal Combustion Counterbalanced Forklift Truck

Emission Compliant
OPERATION AND MAINTENANCE MANUAL

Original Instruction

October 2015

PART NO. 76001648

https://www.forkliftpdfmanuals.com/

https://truckmanualshub.com/

Foreword

This operator's manual explains how to use 2.0T-3.5T forklift truck correctly. It will instruct you on how to perform safety and preventive maintenance in order to ensure safety and maximize the truck's potential. All operators, service technicians, and supervisors should read this manual thoroughly before working with the forklift.

Product specifications in this manual may vary from your actual truck.

Please contact your sales agent if you have any questions or comments regarding this manual.

https://www.forkliftpdfmanuals.com/

https://truckmanualshub.com/

Models and Configuration

Series	Model	Engine	Transmission
2.0T & 2.5T	UT25P	YANMAR 2.6L DSL (4TNE92)	YQXD25-2
	UT25P	MAZDA 2.2L DUAL	YQXD25-5
	UT25P	MAZDA 2.2L LPG	YQXD25-5
	UT25C	MAZDA 2.2L LPG	YQXCD25C-5
	UT25P	PSI 2.4L DUAL	YQXD25-2
	UT25P	PSI 2.4L LPG	YQXD25-2
	UT25C	PSI 2.4L LPG	YQXCD25C-5
3.0T & 3.5T	UT30P	YANMAR 3.3L DSL (4TNE98)	YQXD30
	UT30P	MAZDA 2.2L DUAL	YQXD30-5
	UT30P	MAZDA 2.2L LPG	YQXD30-5
	UT30C	MAZDA 2.2L LPG	YQXCD30G1-5
	UT30P	PSI 2.4L DUAL	YQXD30
	UT30P	PSI 2.4L LPG	YQXD30
	UT30C	PSI 2.4L LPG	YQXCD30G1-5

https://www.forkliftpdfmanuals.com/

https://truckmanualshub.com/

Contents

1. General Rules 1
2. Name of Main Parts or Component 4
2.1 Instruments 5
2.2 Switches 10
2.3 Controls 14
2.4 Body and Miscellaneous 19
3. Operating Instructions 25
4. Operator Protection Equipment 34
5. Maintenance.....35
5.1 Daily Maintenance（8 hours） 35
5.2 Weekly Maintenance（40 Hours） 39
5.3 Monthly Maintenance (166 Hours) 45
5.4 Semi-Annual Maintenance (1000 Hours) 48
5.5 Annual Maintenance (2000 hours) 50
5.6 Others 51

https://www.forkliftpdfmanuals.com/

https://truckmanualshub.com/

6. Structure and Stability of Truck 56

7. Operation 62

7.1 Start-up 62

7.2 Traveling.....62

7.3 Pick Up 64

7.4 Stacking Load 65

7.5 Remove Load 65

8. Parking 66

8.1 Parking Daily 66

8.2 Long Term Storage 67

8.3 Forklift Operation after Long-Term Storage 68

9. Maintenance 69

9.1 Preventive Maintenance Schedule 69

9.3 Periodic Replacement of Chain and Hydraulic Parts 75

9.4 Forklift Fluid Use Chart 76

9.5 Lubrication System Drawing 77

https://www.forkliftpdfmanuals.com/

https://truckmanualshub.com/

9.6 Environmental Protection 78

10. Labels 79

11. Truck Transporting, Lifting, Towing 98

12. Performance Parameters of IC forklift 100

13. Operation, Disassembly and Installation of Cab (Pneumatic) 112

14. Operator Presence Sensing System(required in most markets) 115

15. Operation and Notice about LPG Forklift 121

16. Operational Method of Lead Acid Battery 134

17. Use Installation and Safety Rules of Attachment 139

18. Related Safety Instruction and Standard 141

https://www.forkliftpdfmanuals.com/

https://truckmanualshub.com/

1. General Rules

To keep the truck and you safe, obey the rules below:

1) Only trained and authorized operators shall be permitted to operate the truck.
2) Before starting truck you should check all control and alarm devices; if any are damaged, DO NOT operate until it is repaired.
3) When carrying a load, do not overload. The forks should insert in the load completely and evenly. It is not permitted use only one fork to load.
4) You should operate the truck smoothly when starting, turning, traveling, braking and parking. On a slick or wet road, decrease speed when turning.
5) Lower the forks and tilt the mast backwards when traveling with a load.
6) Be careful when traveling on a grade. If the slope angle is bigger than 10%, travel forward up slope and backward down slope. Never turn sideways or stack load on an incline.
7) Be aware of bystanders, barriers, potholes and overhead clearances.
8) DO NOT allow passengers or persons to stand on the fork.
9) DO NOT stand or walk under the fork.
10) DO NOT operate the truck or attachment from any position except the operator's seat.

https://www.forkliftpdfmanuals.com/

https://truckmanualshub.com/

11) DO NOT carry the load unpackaged. Be careful when carrying large loads.
12) Take care not to lose load when the lift height is greater than 3 meters.
13) Travel with load as low as possible and tilt back the mast.
14) Before driving over a dock-board or bridge-plate, be sure that it is properly secured and strong enough to sustain the total weight of the truck and load.
15) Make sure that there is no open flame near the area. Never smoke near the area. The driver must not remain seated while adding fuel. USE a sealant on all LPG connections having NPT threads.
16) Treat the truck with attachments as a loaded truck.
17) When leaving the truck, you should put the forks down, make the shift lever is in neutral, shut down the engine and cut the power. When parking on a grade, make sure to tighten the brake lever. If necessary, use a block when parking on a grade for a long time.
18) If the truck suddenly malfunctions, or for leakage of electrolyte, hydraulic oil or brake oil, when lifting goods or grade climbing, leave truck in safe state and contact service technician immediately.
19) During installation and assembly, there will be noise and vibration. Please choose the right tool and assembly method. Minimize the noise and vibration as soon as possible to reduce noise pollution.
20) The work road surface for forklift should be stable and free of litter, preferably cement, blacktop or concrete. If there is snow, ice, water or other eye irritants, protect against these and resume work.

https://www.forkliftpdfmanuals.com/

https://truckmanualshub.com/

21) Move the truck to the place which respects traffic when it anchors. If the reason is brake or turn system, move it with a suitable truck (Reference the part of truck move); Other reasons, use a suitable truck to move, tie the cord outside of truck. Please abide by the traffic regulations when moving the truck on roads.
22) DO NOT operate the truck or load cargo after removing the hood, water tank cover board, overhead, or backrest of mast.
23) Make sure there is enough light around the work area. At night, use the head lamps.
24) In the event the truck manufacturer is no longer in business and there is no successor in the interest to the business, the user may arrange for a modification or alteration to a powered industrial truck provided the user shall:
    a. Arrange for the modification or alteration to be designed, tested and implemented by an engineer(s) expert in industrial trucks and their safety;
    b. Maintain a permanent record of the design, test(s) and implementation of the modification or alteration;
    c. Approve and make appropriate changes to the capacity plate(s),decals, tags and instruction handbook;
    d. Affix a permanent and readily visible label to the truck stating the manner in which the truck has been modified or altered together with the date of the modification or alteration, and the name and address of the organization that made the modification or alteration.

https://www.forkliftpdfmanuals.com/

https://truckmanualshub.com/

2. Name of Main Parts or Component

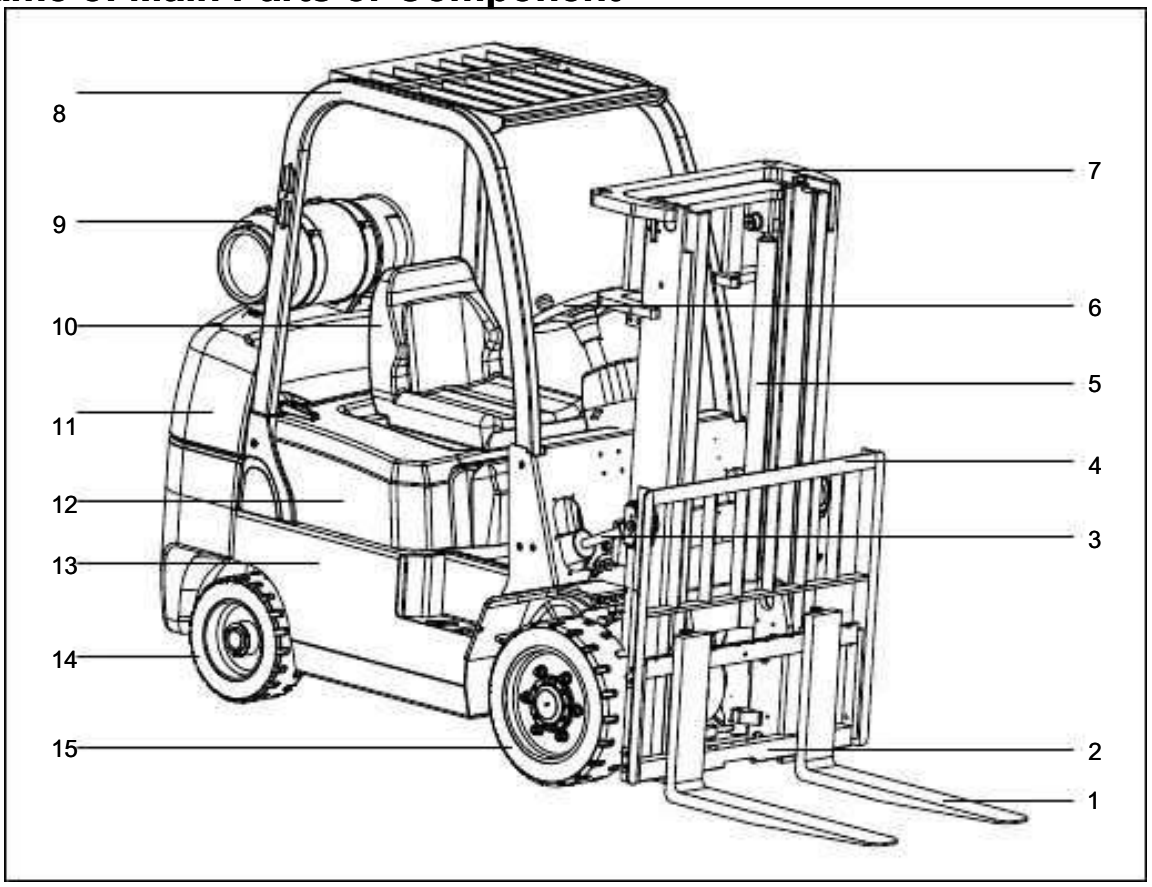

1. Fork
2. Fork Carriage
3. Tilt Cylinder
4.Load backrest
5. Lifting cylinder
6. Steering wheel
7. Mast
8. Overhead guard
9. LPG Tank
10. Seat
11. Counter Weight
12. Hood
13 Truck frame
14. Rear wheel
15. Front wheel

https://www.forkliftpdfmanuals.com/

2.1 Instruments

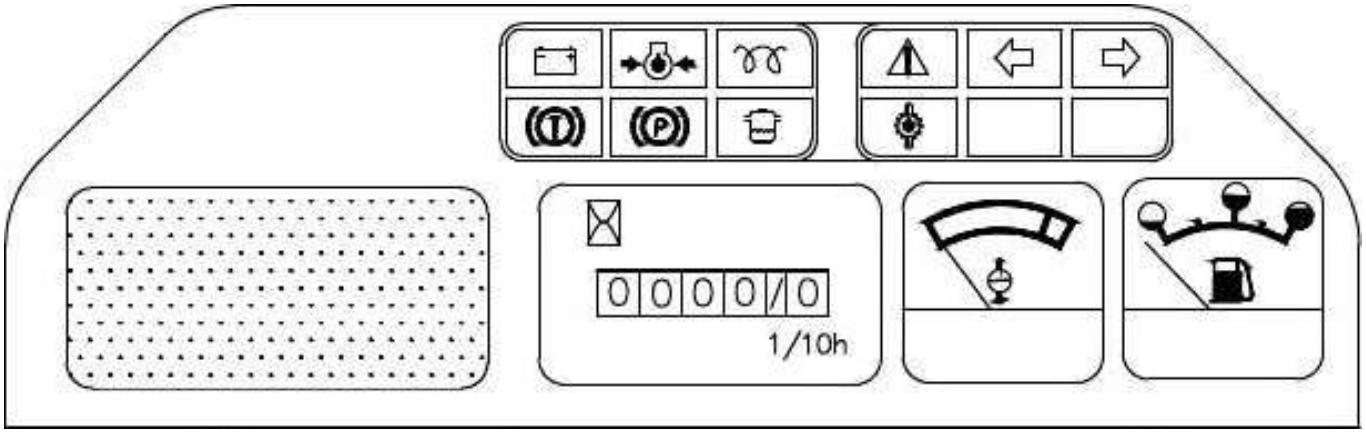

Standard

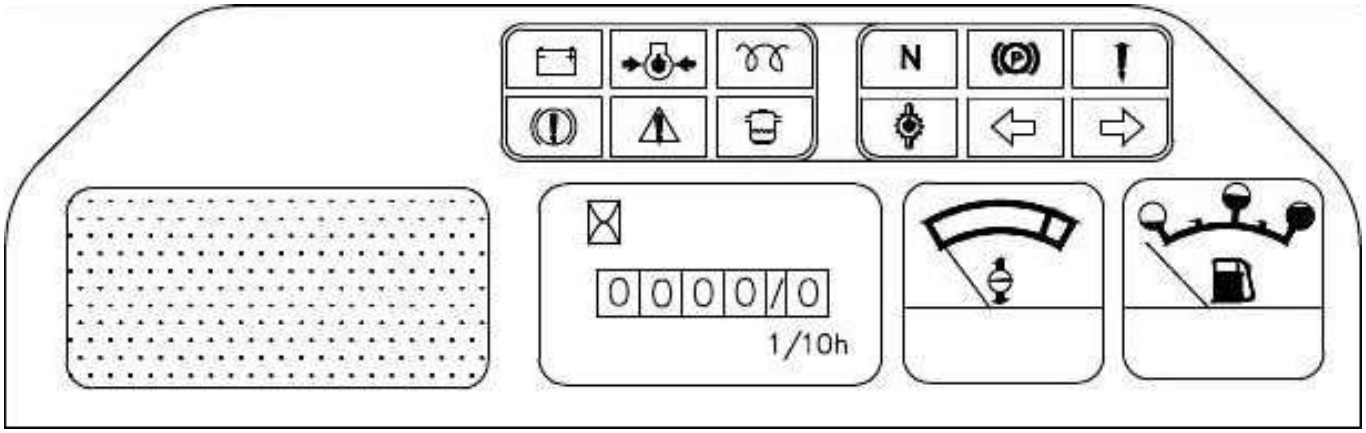

Optional (Operator Presence)

https://www.forkliftpdfmanuals.com/

https://truckmanualshub.com/

Hour Meter

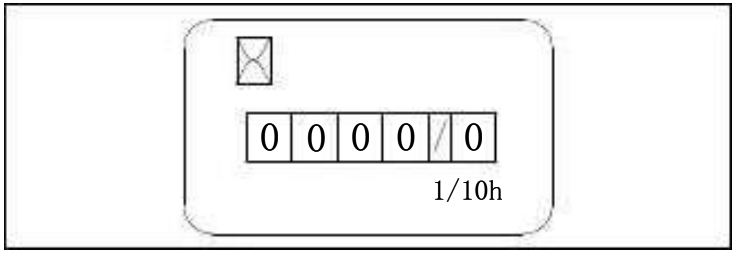

This meter measures the time that the ignition switch is energized, not just engine run time. Use meter to schedule lubrication and maintenance periods.

Engine Coolant Temperature

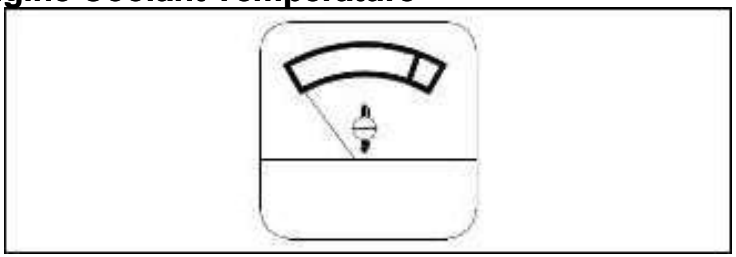

This gauge indicates the Engine Coolant Temperature. Under normal conditions, the indicator is in green zone. (60°C -115°C)

Caution:

If the indicator is in the red zone, stop the truck immediately. Decrease engine speed to allow the engine to cool. Check engine coolant level and inspect the fan belt.

Fuel Gauge

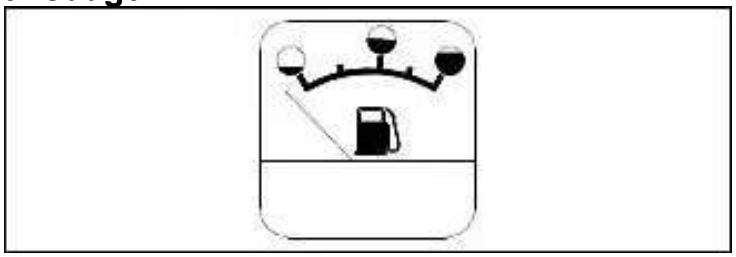

The gauge indicates the fuel level in the tank when the key is in the | (ON) position.

https://www.forkliftpdfmanuals.com/

https://truckmanualshub.com/

Charge

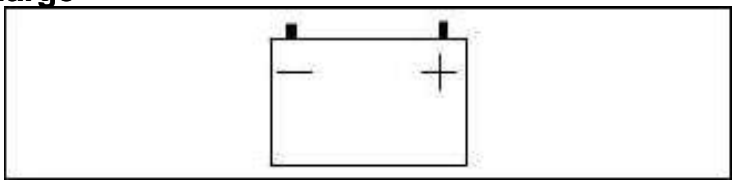

This lamp indicates the battery charge condition. The lamp comes on when the ignition switch is set to “ON”, but goes out after the engine starts and the accelerator pedal is pressed

Caution:
If the light continues to stay lit or comes on during operation, the charging rate is low and should be checked immediately.

Oil Pressure Alert Lamp

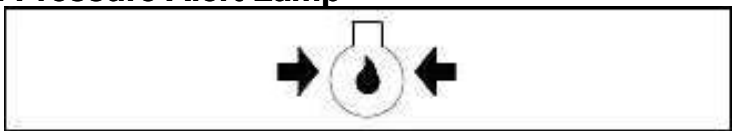

This lamp indicates the pressure of the engine lube oil. The lamp comes on when the ignition switch is set to “ON”, but goes out after the engine starts and the accelerator pedal is pressed.

Caution:
If the light continues to stay lit or comes on during operation, the pressure is lower than 0.05Mpa and should be checked immediately.

Glow Indicator [Diesel Truck]

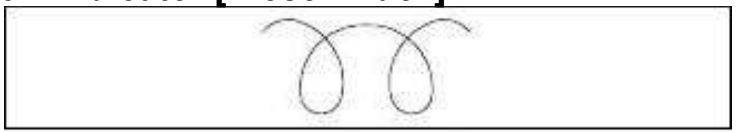

The lamp comes on when the ignition switch is set to “ON”. After the indicator goes out, turn the switch to the “Start” position.

https://www.forkliftpdfmanuals.com/

https://truckmanualshub.com/

Oil-Water Separator Indicator Light [Diesel truck]

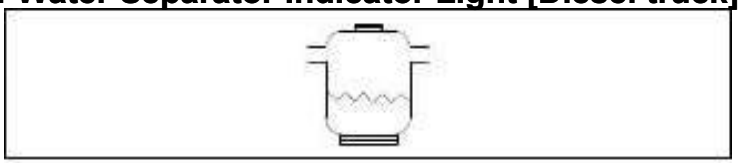

In general condition, when the key switch places in (start) position, the light is on, but when the engine starts, this light is off.
When the engine starts, if water sediment reaches certain quantity, the light is on.

During engine running, if the light keeps on or flashes, you should shut down the engine and drain the water.

Oil Temperature Lamp

Under normal conditions, the lamp comes on when the ignition switch is set to the “ON” position. After the engine starts, the lamp should go out.

During operation, the indicator light will come on if the oil temperature exceeds the normal range (60°C-120°C). .

Caution:

If the lamp comes on, stop the truck immediately. Decrease engine speed to allow the engine to cool. Wait until the lamp goes out, and check the oil level in the torque converter transmission box.

Warning:

It will damage the engine and transmission, etc. when indicated.

Steering Signal Indicator Light

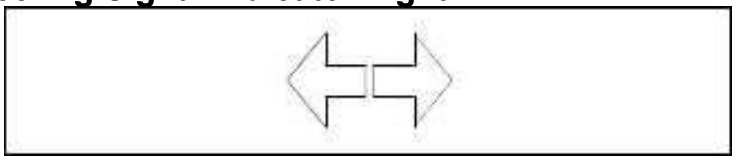

When the steering light is on, the corresponding left or right arrow will flash

https://www.forkliftpdfmanuals.com/

Engine Failure Indicator

When the Mazda 2.2L engine gets out of order, the Warning light, Engine Malfunction Indicator will be on. Please stop and eliminate the failure.

Accumulator Warning Indicator

This indicator light does not work on the forklift.

Neutral Position Start-Up Indicator

N

Put the steering handle in the neutral position when temporarily stopping the truck, the indicator light will be on.

The truck can be started up only in the neutral position.
It‘s prohibited for truck in the neutral position slipping when it‘s on the slope

Parking Indicator

Parking indicator shows on means brake is applied, Please loosen the parking handle (hand brake handle), The parking indicator will show off

Warning:

It will damage the engine and transmission, etc. when indicated..

Failure Indicator

When a Failure indicator comes on, stop truck and correct the error.

https://www.forkliftpdfmanuals.com/

2.2 Switches

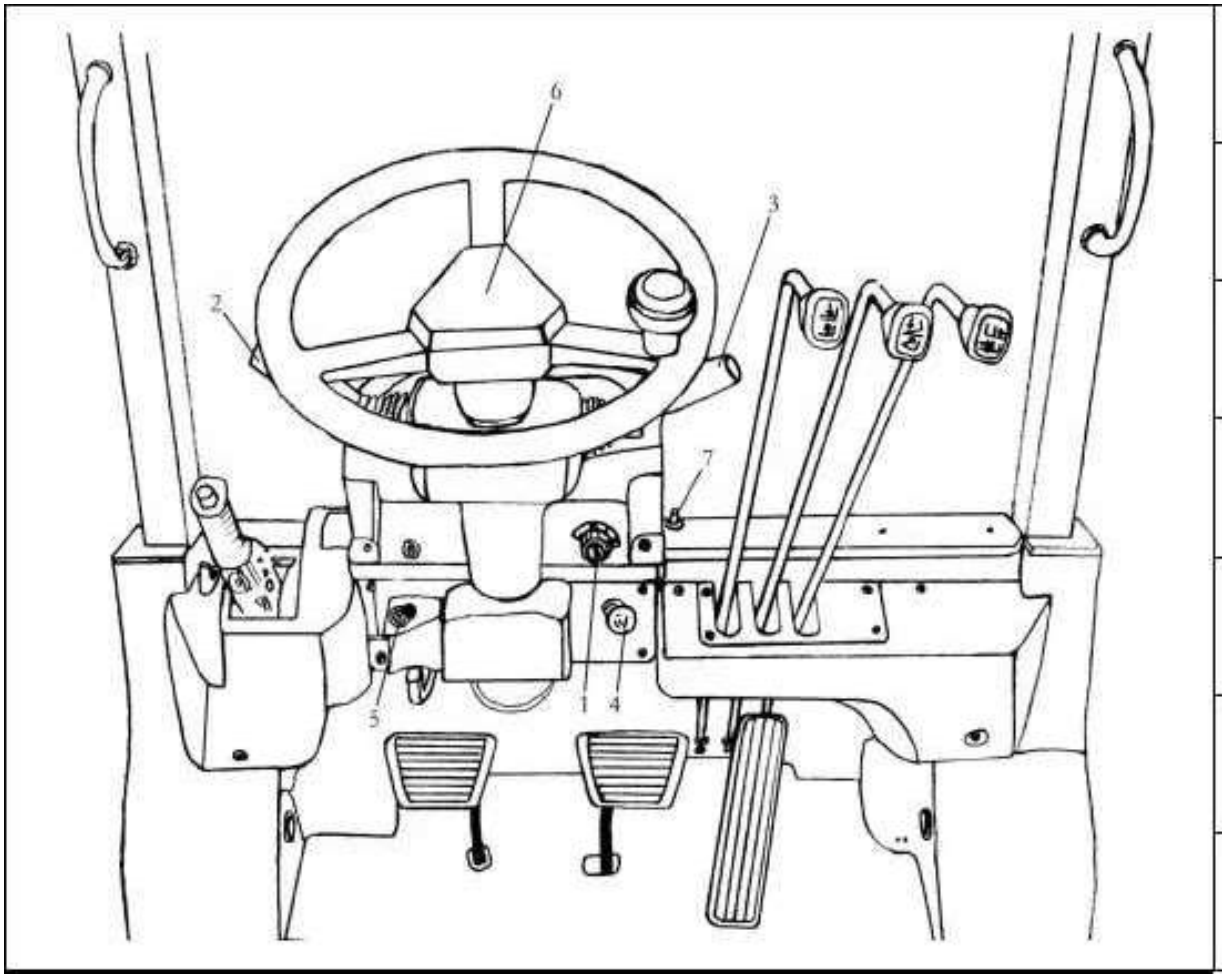

1. Key
2. Reverse lever
3. Turn signal lever
4. Light switch
5.Strobe light switch
6. Horn button
7. Fuel Selection switch

https://www.forkliftpdfmanuals.com/

https://truckmanualshub.com/

Key [1]

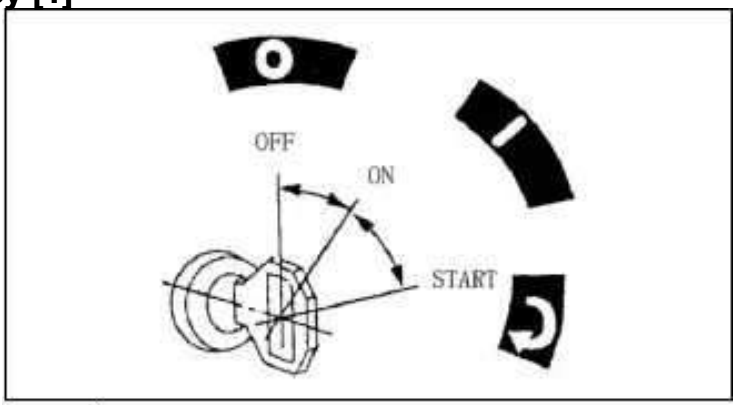

O （OFF）

This is the position at which the key may be inserted or removed.

Gasoline and diesel engines will stop when the key is turned to this position.

ON（|）

The electric circuit is closed with the starter switch at “ | ” (ON). After the engine starts, the key remains in this position.

（START）

When the key is turned to the “START” position, the starter motor is engaged. Switch returns to the “ON” position automatically after starting.

Diesel engine

Turn the key to “ON” position, the indicator light will come on momentarily. After the indicator light goes out, turn the key to “Start” position.

CAUTION:

1. Do not leave the key in the “ | ”(ON) position when engine is off. Doing so will discharge battery.
2. Do not turn key to the “START” position when the engine is running. Doing so may damage the starter motor.
3. Do not keep key in the “START” position for more than 5 seconds at a time. Wait about 2 minutes between attempts.

Reversing switch [2]

The forward reverse lever of truck is installed with electronic reversing and is set on the left of steering column.

F—Forward; N—neutral;
After allocation—backward

CAUTION:

Do not forget to place the forward-reverse lever in the neutral position before starting the engine.

https://www.forkliftpdfmanuals.com/

https://truckmanualshub.com/

Turn Signal Lever [3]

Use this lever which is at the right side of steering column to indicate the turning direction of the truck. **R**-right turn, **N**-neutral, **L**-left turn.

The turn signal lever does not automatically return to the neutral position unlike general passenger cars. It must be returned to the neutral position manually.

Light switch [4]

This light switch can be pulled out at two stops

Light / Stage	Power	Small Lamp	Head Lamp	Side Lamp
0	×			
1st	×	×		×
2nd	×		×	×

(×) means connected

Alarming light switch [5]

Pull out-alarming light is on

Press down- alarming light is off

Horn Button [6]

Press the rubber cover at the center of steering wheel to sound horn.

Dual Fuel Toggle Switch [7]

(Only for LPG-gasoline forklift)

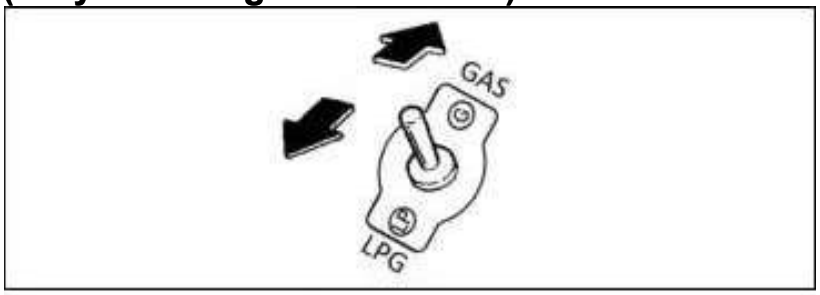

From LPG to GAS:

（1）With the truck off, change the dual fuel toggle switch from LPG position to GAS position to begin running on GAS. Start truck.

（2）If the engine stops, check that the dual fuel toggle switch is set to GAS position and then re-start the engine.

From GAS to LPG:

（1）With the truck off, place the dual fuel toggle switch from GAS to LPG to run on LPG. Start truck.

(2）If the engine stops, check the shutoff valve at the vent end of the cylinder, and then check that the dual fuel toggle switch is in LPG position. Next re-start the truck.

https://www.forkliftpdfmanuals.com/

https://truckmanualshub.com/

Caution:

1. Use gasoline to drive several miles at least every two weeks to avoid gasoline deterioration.

2. It is recommended to start the engine using GAS when operating in cold environments. Once the engine has reached operating temperature, it can be run using either fuel.

When using LPG, you should pay attention to the following points:

1. Before driving, check cylinder and pipe for leakage. USE a sealant on all LPG connections having NPT threads.
2. After LPG is working, before shutting down the engine:
   (a) Before storing for a long time, you should completely close the cylinder shutoff valve and check if the engine leaks.
   (b) During moving, if there is leakage, fault, or other abnormal condition, completely shut off the cylinder shutoff valve and have LPG system serviced.

https://www.forkliftpdfmanuals.com/

2.3 Controls

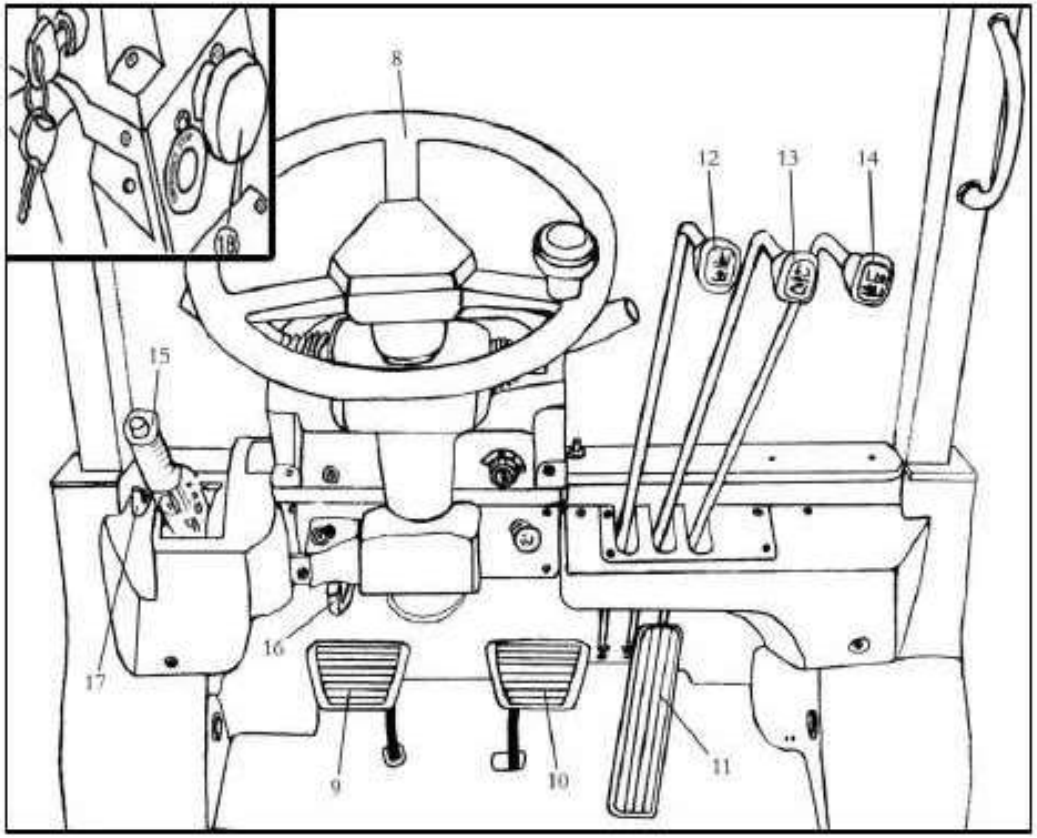

8. Steering Wheel
9. Inching Pedal
10. Brake Pedal
11. Accelerator Pedal
12. Lift Lever
13. Tilt Lever
14. Side Shift Lever
15. Parking Brake Lever
16. Steer Column Tilt Adjustment
17. Hood Latch
18. Emergency Disconnect Switch (If Equipped)

https://www.forkliftpdfmanuals.com/

https://truckmanualshub.com/

Steering Wheel [8]

The steering wheel is operated in the conventional manner, that is, when the wheel is turned right, the truck will turn to the right; when the wheel is turned left, the truck will turn the left. The steer wheels are located at the rear of the truck. These cause the rear of truck to swing out when a turn is made.

WARNING:

This truck is provided with the power steering, so heavy hand-wheel operation is caused when the engine comes to a stall. To put the power steering in operation again, restart the engine without delay.

Inching Pedal [9]

Depress the pedal partially to decrease hydraulic oil pressure. Use inching pedal for Forklift loading and unloading, and when slow speed is required. When pedal is depressed all the way, forklift will slow to a stop.

CAUTION:

Do not use the inching pedal too much, as it will cause transmission oil temperature to rise and the clutch to slip.

Brake Pedal [10]

Depress the pedal partially to slow vehicle motion. Depress it fully to bring vehicle to a stop. Release the pedal to resume vehicle motion.

CAUTION:

Avoid sudden braking which can lead to vehicle roll over or falling cargo, causing accidents.

https://www.forkliftpdfmanuals.com/

https://truckmanualshub.com/

Accelerator Pedal [11]

Depress accelerator pedal to increase speed. Release pedal to decrease speed.

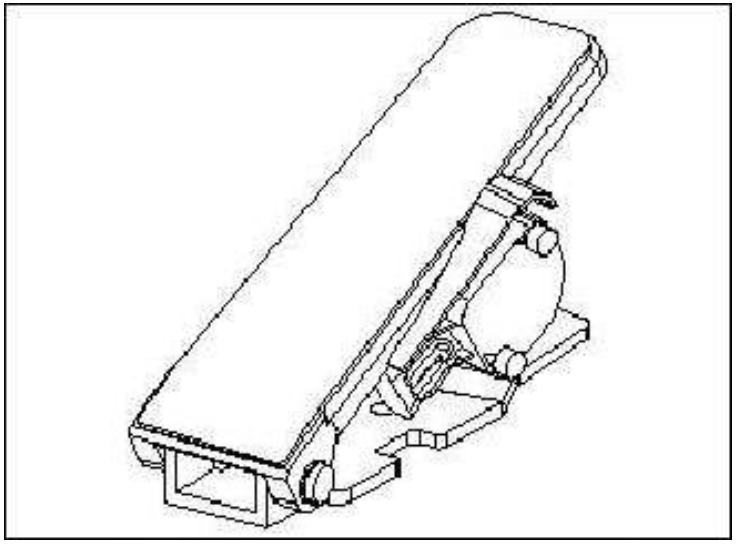

Note: Mazda 2.2L engine with

Electronic pedal

Lift Lever [12]

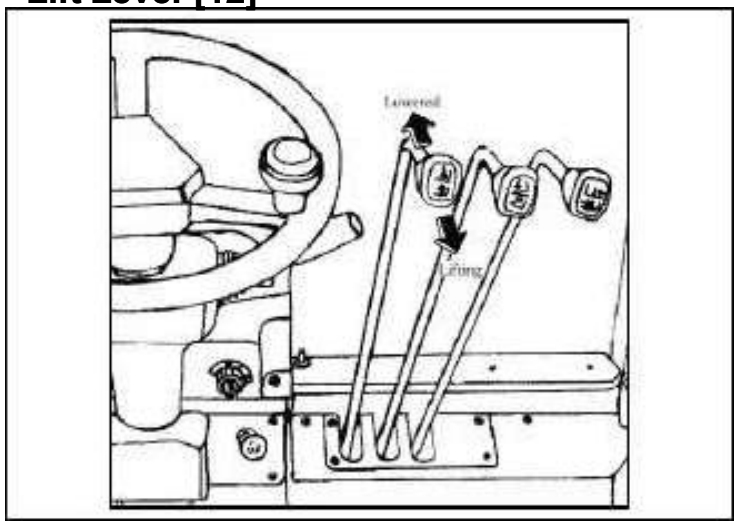

For lifting or lowering the forks.
Pulling up, Pushing down.
Lift forks by tilting lever backward. Lower forks by tilting lever forward. Control lifting/lowering speed with accelerator pedal.

https://www.forkliftpdfmanuals.com/

https://truckmanualshub.com/

Tilt Lever [13]

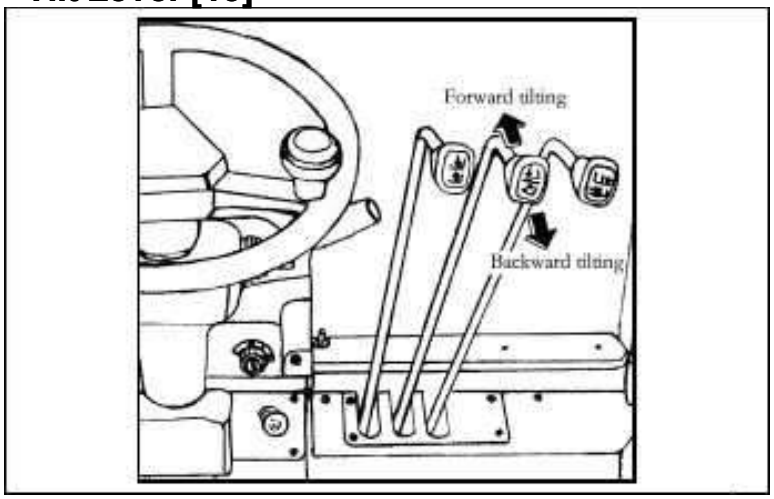

Move lever backward to tilt mast backward. Move lever forward to tilt mast forward.

Control tilt speed with tilt lever and accelerator pedal.

CAUTION:

The tilt lock mechanism in the hydraulic control valve will not allow the mast to tilt forward while the engine is being shut down, even if the tilt lever is pushed forward.

Side Shift Control Lever [14]

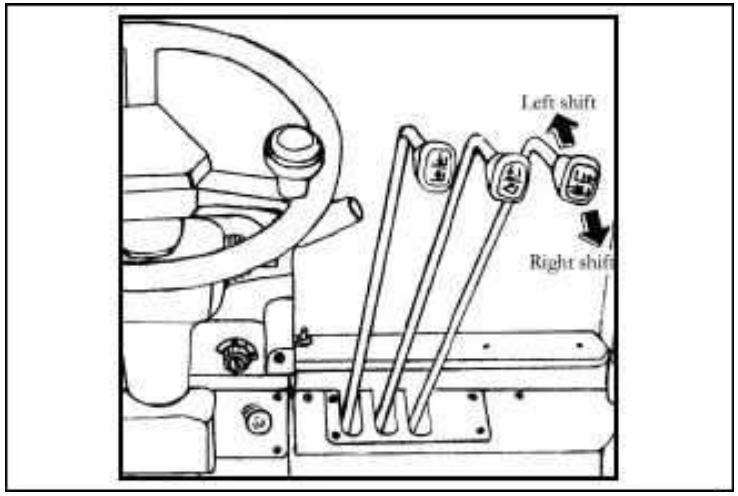

Used for left shifting and right shifting of the side shift bracket.

Push forward-move to the left

Pull backward-move to the right

Side shifting speed depends on the tilting angel of the handle and accelerator control.

https://www.forkliftpdfmanuals.com/

https://truckmanualshub.com/

Parking Brake Lever [15]

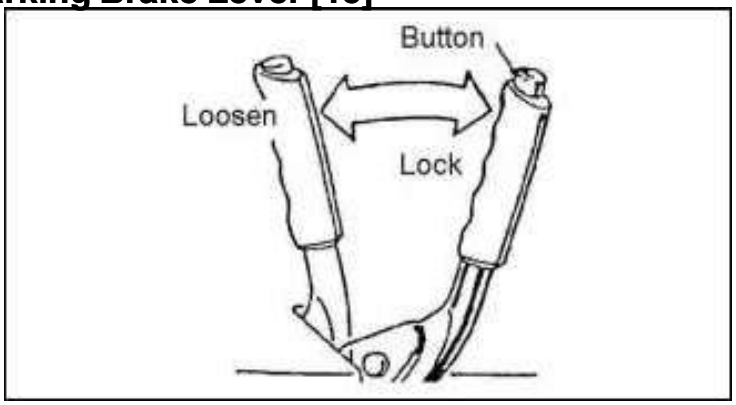

Pull lever backward to set the parking brake, push lever forward to release the parking brake. Always set parking brake before leaving the truck.

Steering Column Tilting Angle Adjustment [16]

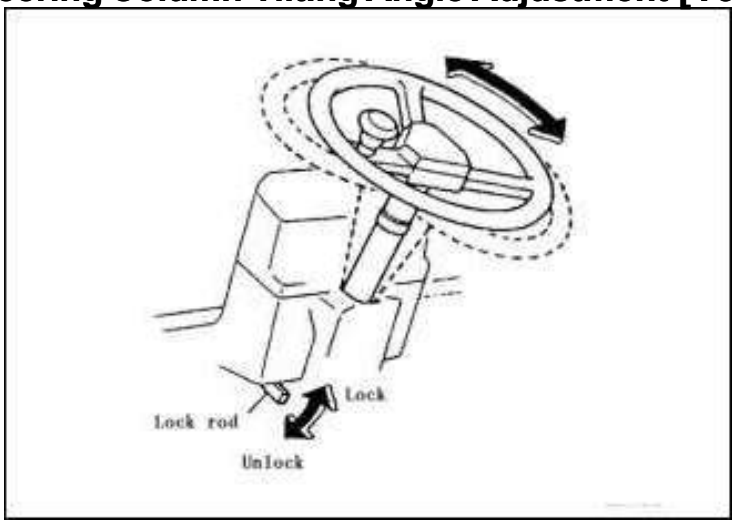

The tilting angle of the steering wheel is adjustable to suit individual operators. The steering column is unlocked by pushing down the lever at the left side of steering column, then adjust the angle suit to the driver, and pull up the lever to lock.

Hood and snap close [17]

To avoid opening the hood at discretion, a snap close is set here. Open the snap close first then the hood can be opened.

https://www.forkliftpdfmanuals.com/

2.4 Body and Miscellaneous

Load Backrest

The load backrest improves stabilization when loading goods. DO NOT use forklift truck without the load backrest.

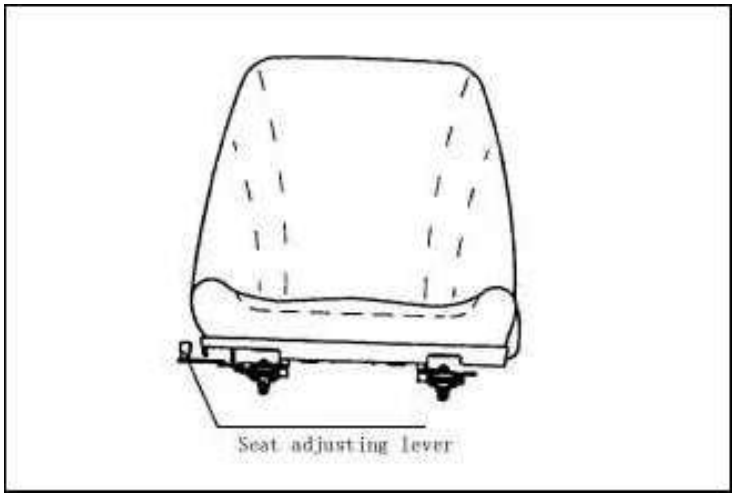

Seat and Seat Adjusting Lever

Adjust operator's seat to desired position, ensuring it provides easy access to all hand and foot controls. Unlock seat by moving the adjusting lever to the right. Before operating truck make sure that seat is securely locked.

Warning:

a. Place key in "OFF" position before adjusting the seat.

b. DO NOT attempt to adjust seat while truck is moving.

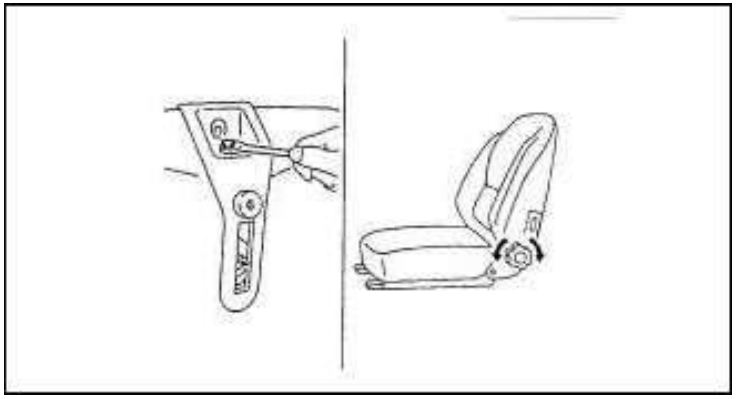

Seat Suspension

Use wrench to adjust bolt which is located behind the seat, or adjust knob located on the left-hand side of the seat. It's recommended to sit on the seat when adjusting

https://www.forkliftpdfmanuals.com/

Seat Switch

While sitting in the seat and wearing the safety belt, ensure your back and waist are as close to the seat back as much as possible.

Check the bolts which attach the safety belt to the truck for tightness. DO NOT tie safety belt in a knot. Do not let belt press on hard or fragile objects. Avoid letting safety belt come in contact with sharp edges that may result in tearing or fraying of the belt. Do not tilt the seat back too much; otherwise the safety belt may not be able to be latched.

DO NOT remove safety belt components. Always inspect safety belt before using. If safety belt is damaged or unusable, replace with new belt. Safety belt can be used for 3 to 5 years under normal use. Replace safety belt sooner if damaged.

Overhead Guard

DO NOT operate forklift without the overhead guard. It is designed to protect the operator from falling objects and meets the safety standard.

Hood

The hood can be fully opened to provide easy access when performing maintenance. The hood can be easily lifted with the aid of a hood damper. To lock the hood, push down on the front of hood until it latches.

Caution:

Before opening the hood, the hood release knob should be pulled out first.

Use caution not to catch your fingers in the hood while closing it.

Warning:

While performing maintenance under the hood, the engine must be off to avoid injury to hands or other body parts. The engine can be running in order to troubleshoot some problems, however, DO NOT place body under hood while it is running.

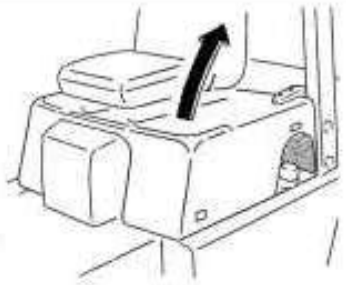

https://www.forkliftpdfmanuals.com/

Radiator Cover Hood

Must use special tools (socket wrench) to open radiator cover hood.

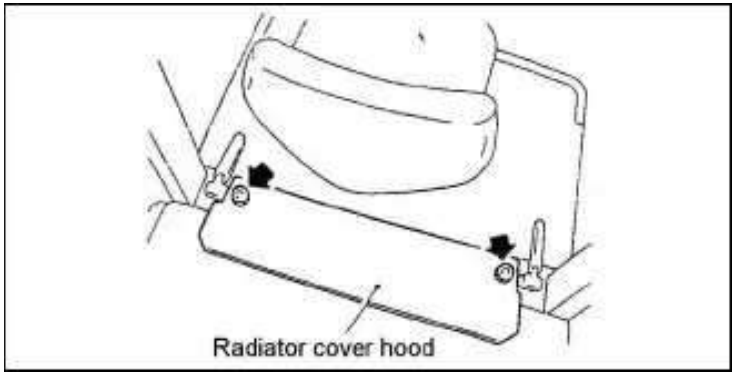

Caution:

Retighten the bolt on the cover hood.

Radiator Cap And Coolant Reservoir

The reservoir is located inside the hood.

The radiator is located under the cover plate at the rear of the hood.

Warning:

When the water temperature of the engine is higher than 70 degrees Celsius, do not open the pressure cap of the radiator. Loosen cap slowly to allow steam to escape. After that, tighten cap securely. It is good practice to use a thick waste cloth or the like when removing the cap.

DO NOT wear gloves when removing radiator cap. You may get burned on your hand if hot water splashes on it.

Antifreeze is harmful to a person, if swallowed. Seek medical advice immediately

Keep antifreeze away from children.

https://www.forkliftpdfmanuals.com/

https://truckmanualshub.com/

Fork Stopper

Use it to adjust fork spacing and to lock the forks into position. Pull up fork stopper, turn 90°, adjust fork spacing depending on the load to handle.

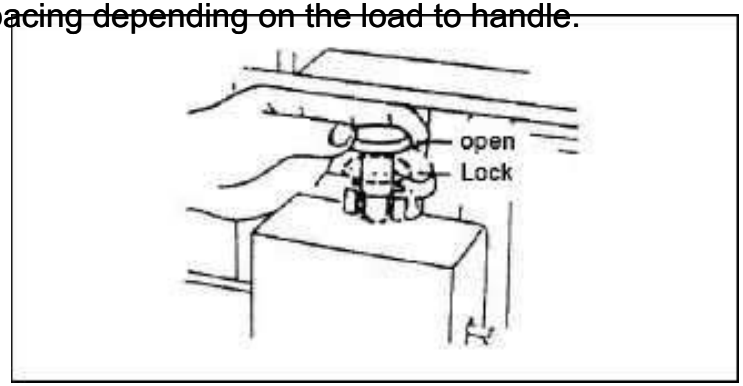

Warning:

The forks should be set symmetrically to machine centerline and fork stoppers should always be set.
The lower beams of the fork have a cut out section to load or unload forks.
DO NOT set the forks over the hatch. Check the bolt at the middle of the fork bracket used to prevent fork load at the hatch.

Safety Step and Safety Grip

Safety steps are provided on both sides of the truck body. The safety grip is located on the front left pillar of the overhead guard. Use both the safety step and safety grip when mounting and dismounting the truck.

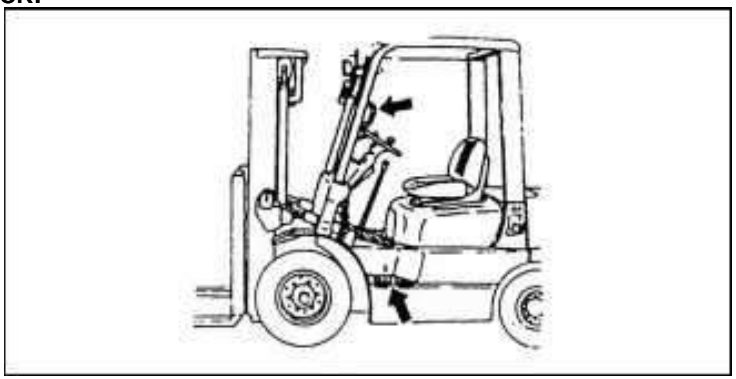

Brake Fluid Reservoir

The brake fluid reservoir is provided at the left of the cab.

Hydraulic Fluid Reservoir Cap

The hydraulic fluid reservoir cap is located on the right side of the hood. Fill hydraulic fluid through this filler port. The cap is provided with a dipstick. After filling hydraulic fluid, lock the cap.

https://www.forkliftpdfmanuals.com/

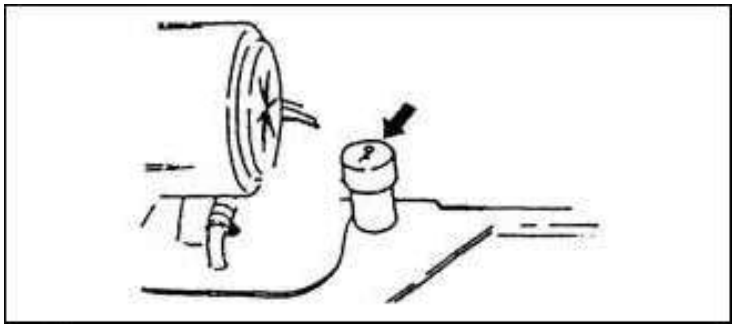

Hydraulic Fluid Reservoir Cap

Fuel reservoir cap (Diesel)

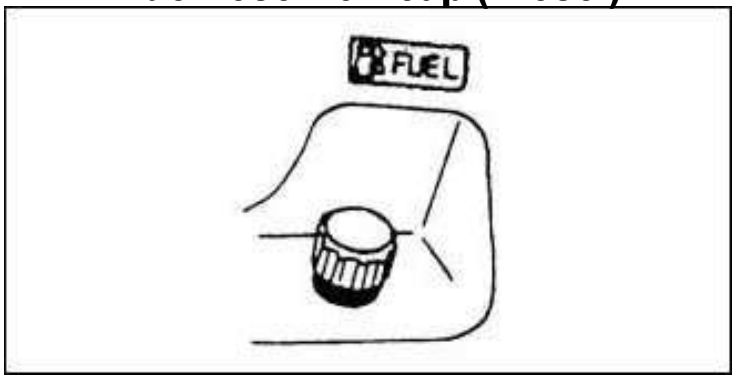

The fuel reservoir cap is located on the rear left side of the truck body. The fuel reservoir cap has a breather inside it to allow air to enter the reservoir. Check to see that the breather is in good condition every time fuel is added.

⚠ Warning:

—Fuel handling—

1. Stop the truck, shut down the engine and apply the parking brake securely. Make sure there is no naked flame near the area. DO NOT smoke while handling fuel. DO NOT remain seated when adding fuel.
2. After adding fuel, securely close the reservoir cap. A loose cap could cause a fuel leak or pose a fire hazard.
3. Before starting the engine, make sure the fuel reservoir cap is securely tightened and that no fuel has spilled on or around the truck.
4. NEVER use a lighted match or a lighter to check the fuel level.

https://www.forkliftpdfmanuals.com/

https://truckmanualshub.com/

Fuel reservoir cap (Emission Comp)

The fuel reservoir cap is located on the rear left side of the truck body. The fuel reservoir cap has a tether to keep the cap connected to the truck and prevents the cap from venting to the environment, per certification requirements.

Rearview mirror

There are two rearview mirrors on the overhead guard for operator to see behind the truck.

https://www.forkliftpdfmanuals.com/

https://truckmanualshub.com/

3. Operating Instructions

1. Only trained and authorized operators should operate the truck.

2. Inspect the truck at periodic intervals for oil or water leaks, deformation, defects, etc. If neglected, the life of the truck will be shortened and in the worst case a fatal accident could occur.

Make sure to replace the “key safety parts” during periodical inspection.

Wipe off any oil, grease or water from the floor board and foot and hand controls.

Shut down the engine before inspecting the engine and its allied components. Use extra caution when near the engine fan.

When inspecting the radiator or exhaust system, exercise caution to avoid being burned.

3. Any time you find that the truck is not functioning properly, stop the truck and report the condition to your supervisor.

When performing maintenance on the mast, front and rear lights, or other high places, be safely secured and take care not to slip

If any warning lamp comes on, move to a safe place and check or repair the trouble.

When performing maintenance, take care not to cut hands, head or other parts of body on truck edges.

Place a sign/label on a truck found to be defective.

4. DO NOT use open flame to check fuel, electrolyte or coolant levels.

If the temperature of the water tank is above 70°C (155°F), DO NOT open the tank cap. DO NOT smoke while inspecting the battery, handling fuel or working on the fuel system. There is a danger of explosion.

Always have a fire extinguisher available when working on the truck.

Never fill the fuel tank while the engine is running.

5. Warm coolant temperature to 70°C (155°F) before operation; and cool down coolant temperature below 70°C (155°F) following work.

6. When using the truck in an enclosed space, make sure there is enough ventilation. If needed, use a ventilation fan. DO NOT work in a closed working space because exhaust gases are harmful.

https://www.forkliftpdfmanuals.com/

7. Never mount or dismount a moving truck. Use the safety step(s) and safety grip when mounting or dismounting the truck.

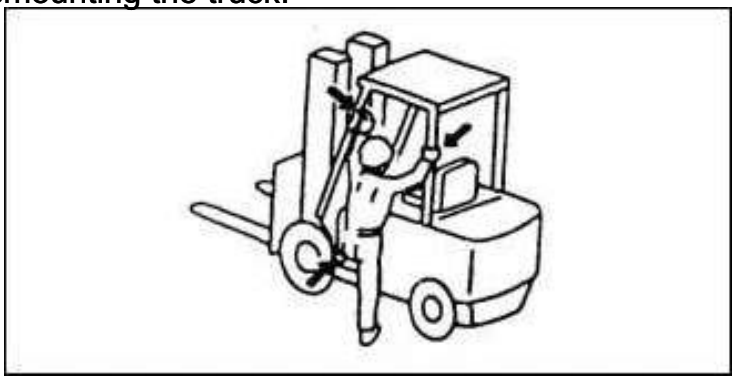

8. DO NOT operate truck controls unless properly seated.

Before starting and operating the truck, adjust the seat so you have easy access to all hands and foot controls.

9. Before starting and operating the truck, make sure no one is under, on or close to the truck, and the forward-reverse lever is in neutral.

10. Park the truck on a level surface and apply the parking brake securely. If the truck cannot be parked on a level surface, be sure to block the wheels.

Lower the forks to the ground or floor and tilt them forward a little. Shut down the engine and remove the key.

11. Operate the controls smoothly, DO NOT jerk the steering wheel. Avoid sudden stops, starts or turns.

12. Control speed and observe traffic signs.

When traveling on public roads or streets, obey all local traffic regulations.

13. Be aware of your surroundings at all times while operating truck.

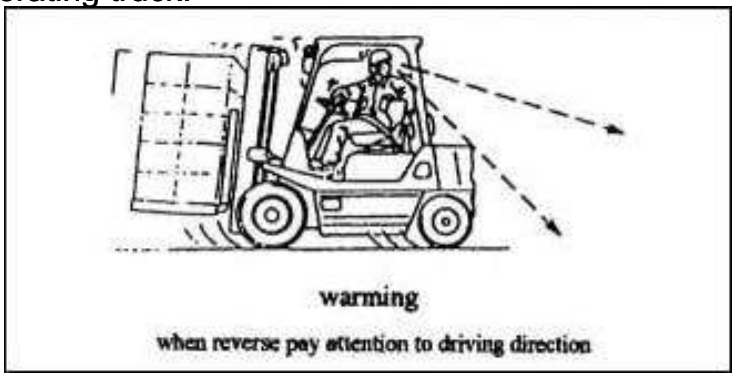

14. DO NOT allow passengers to ride on the truck, or allow people to sit on the forks or pallets.

15. Before driving over a dock-board or bridge-plate, be sure that it is properly secured and strong enough to sustain the weight of the truck/load. Check the ground or floor condition of the ground or floor in the work area in advance.

https://www.forkliftpdfmanuals.com/

https://truckmanualshub.com/

16. Keep your mind on your work.

17. Keep your head, hands, arms, feet and legs within the cab. Never place them out of the cab for any reason.

18. When handling bulky loads which restrict your vision, operate the truck in reverse or have a guide.

19. Slow down and sound horn at cross aisles and other locations where vision is restricted. The speed should be kept slower than 1/3 of max speed.

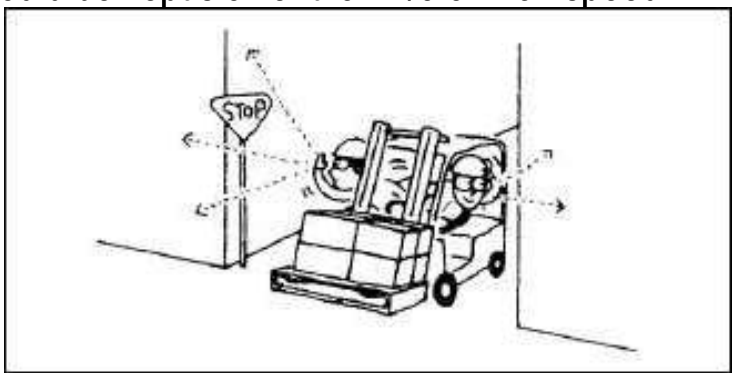

20. Keep fluid cans, row cotton, paper or chemicals away from the truck during operation since they may catch fire or explode due to exhaust gas from the muffler.

21. Use head lights and required work lights and clearance lights at night. Travel at a slower speed at night.

https://www.forkliftpdfmanuals.com/

https://truckmanualshub.com/

22. The work surface should be solid and level such as a cement road, asphalt or concrete road surface.

The truck is designed to operate under the following climactic conditions:–20°C — 50°C; wind speed is lower than 5m/s; air relative humidity is less than 90%.

Inspect the surface over which truck will operate. Inspect for holes, drop-offs, obstacles, and rough spots. Look for anything that might cause you to lose control of the truck, or cause the truck to bog down or turn over.

Clear away trash and debris. Pick up anything that might puncture the tires or cause the load to become unbalanced.

Slow down when driving on wet and slippery roads. Stay away from the shoulder of the road. If you have to drive on the shoulder, use extreme caution.

Rugged surfaces cause truck vibration and noise. The high air pressure of the tires will cause vibration and noise as well.

DO NOT operate the truck during inclement weather, such as wind storms, thunder storms, snow, etc.

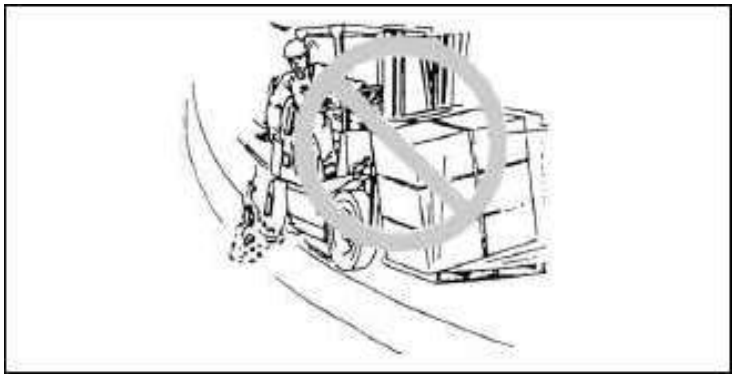

https://www.forkliftpdfmanuals.com/

23. When operating a loaded truck, have the rear end of the truck pointed downhill. When operating an unloaded truck, have the rear end of your machine pointed uphill.

Never turn the truck sideways on an incline. There is danger of the truck turning over.

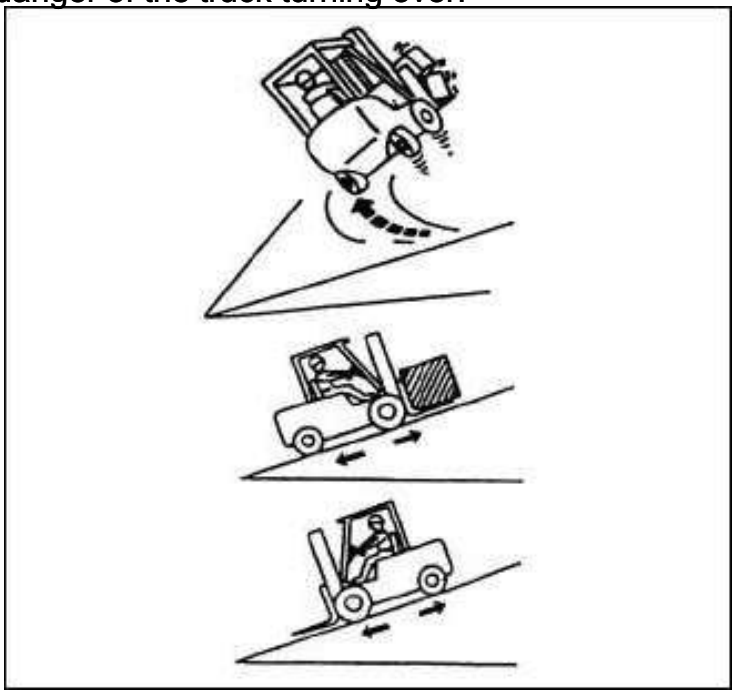

24. When operating truck down on a grade, use engine idle speed. At the same time, use the brake pedal intermittently.

25. It is dangerous to travel with forks higher than the appropriate position regardless of whether they are loaded or not. Maintain a good traveling posture. (When traveling, the forks should be 15 to 30 cm above the ground or floor.)

DO NOT operate the side shift mechanism, if equipped, when the forks are raised and loaded, since this will cause the truck to become unbalanced.

A truck with attachments should be considered the same as a loaded truck

https://www.forkliftpdfmanuals.com/

https://truckmanualshub.com/

26. Travel with load as low as possible and tilted back.
27. Avoid braking too sharply or descending on a grade at a high speed. There is danger of loads falling down or the truck turning over.]

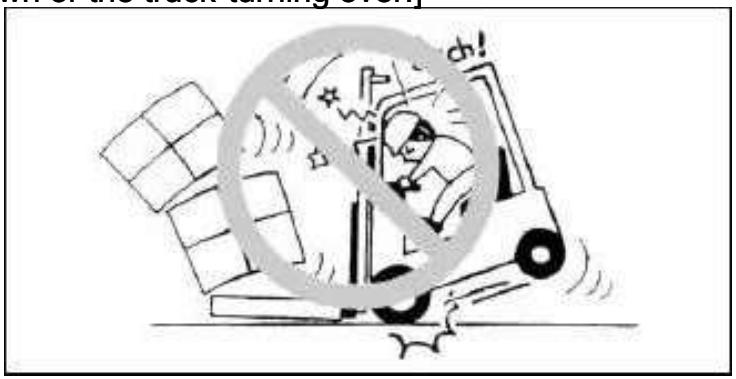

28. Always brake to a full stop before reversing direction of travel.
29. Take the shape and material of the loads to be handled into account when selecting the proper attachment and tools.

Avoid hoisting the load with wire rope hung from the forks or the attachment, since wire rope may slide off. If needed, qualified personnel should perform a sling operation, making use of a hook or crane arm attachment.
Make sure the fork does not protrude from underneath the load. The protruding fork tips may damage or turn over an adjacent load.

30. Know the rated capacity of your lift truck and its attachment, if any, and never exceed it.

DO NOT use people as additional counterweights. This is very dangerous.

31. Load back rest is in place to prevent hitting the higher goods. A load backrest is used to ensure stable loading. DO NOT use forklift truck when lifting more than two items.

https://www.forkliftpdfmanuals.com/

32. Never permit anyone to stand or walk under upraised forks or other attachments, if machine is so equipped.

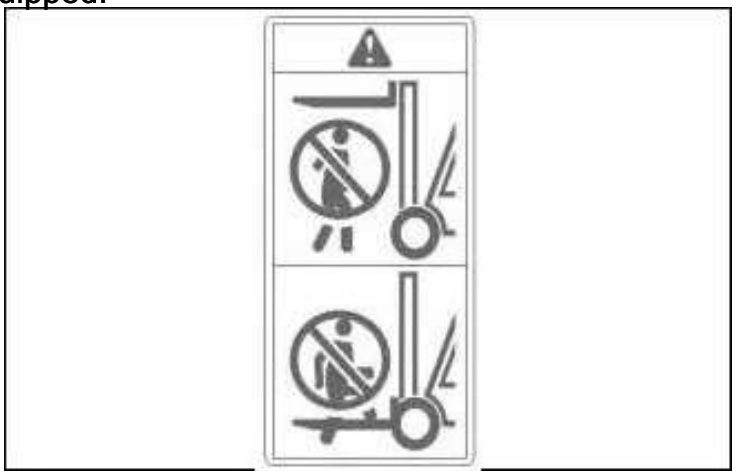

NEVER permit anyone to stand on the forks.

33. DO NOT put head or body into the interspace of mast and overhead guard which may cause loss of life.

DO NOT place hands into the interspace of inner mast and outer mast.

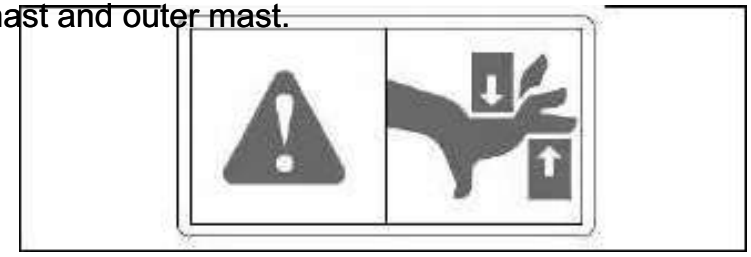

34. When load is to be retrieved from a pile, enter the area squarely. Engage forks into the pallet carefully

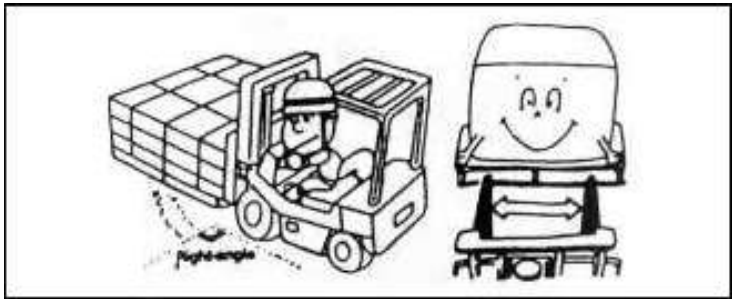

35. When traveling on rough roads or turning, stay to the center of the road to avoid losing the load or turning over.

https://www.forkliftpdfmanuals.com/

https://truckmanualshub.com/

36. DO NOT engage forks into loads at high speeds. Always make certain the load is stable before lifting the forks.

Be sure to stop in front of the load before engaging the forks, and make certain there are no obstacles, then engage the load by driving forwards.

37. Make certain the load is well stacked and evenly positioned across both forks. DO NOT attempt to lift a load with only one fork.

On the truck with an attachment such as a load grab, make certain the load is securely and correctly grabbed, and pull the loading control level to the full (increase to relieve pressure).

38. Never lift loads when the truck is on an incline Avoid loading work on a grade.

39. DO NOT stack loads on forks in such a way that the top of the load exceeds the load backrest height. If this is unavoidable, make the load as secure as possible. When handling bulky loads which restrict vision, operate the truck in reverse or have a guide

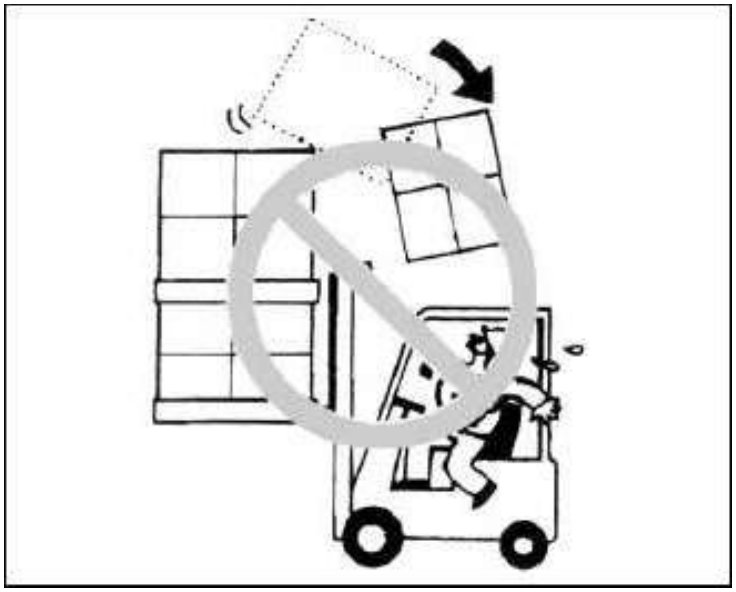

https://www.forkliftpdfmanuals.com/

40. Use minimum forward and reverse tilt when stacking and unloading loads. Never tilt forward unless the load is over stack or at a low lift height.

When stacking loads on a high place, tilt the mast vertically when load is 15 to 20 cm above the ground before lifting the load further. Never attempt to tilt the mast beyond vertical when the load is raised high.

To unload loads from a high place, insert forks into the pallet and drive backwards, then lower the load. Tilt the mast back after lowering. Never attempt to tilt the mast with the load raised high.

41. DO NOT tow a truck that has engine problems, or whose steering system doesn't work properly, or whose braking system has been disabled.

Obey all traffic rules when towing the truck.

42. Dress appropriately for operating the truck (overalls or other protective uniforms, safety helmet, safety shoes, etc.). Avoid wearing neckties or other articles of clothing which may present a hazard if they come into contact with truck components.

43. The workplace should be equipped with a fire extinguisher. In order to provide easy access to it, the fire extinguisher is usually installed on the safety frame rear supporting leg. The operator should be familiar with position of the fire extinguisher and its use.

44. Use a pallet, instead of the forks, when carrying small goods.

45. There are labels on the machine that display warnings and describe methods for operating the lift truck. When operating the machine, observe and follow all markings on the machine in addition to this operator's manual.

Replace damaged or missing decals and name plate.

https://www.forkliftpdfmanuals.com/

https://truckmanualshub.com/

4. Operator Protection Equipment

- The LOAD BACKREST EXTENSION is installed to keep loose parts of the load from falling back toward the operator.
- It must be high enough, with vertical openings small enough, to prevent the parts of the load from falling backwards. If a load backrest extension that is different from the one installed on your lift truck is required, contact your Utilev lift truck dealer.
- The OVERHEAD GUARD is intended to offer reasonable protection to the operator from falling objects, but cannot protect against every possible impact. Therefore, it must not be considered a substitute for good judgment and care when handling loads. Do not remove the overhead guard.
- The SEAT BELT AND HIP RESTRAINT provide additional means to help the operator keep the head and torso substantially within the confines of the lift truck frame and overhead guard if a tip over occurs. This restraint system is intended to reduce the risk of the head and torso being trapped between the lift truck and the ground, but it cannot protect the operator against all possible injury in a tip over. The hip restraint will help the operator resist side movement. It is not a substitute for the seat belt. Always fasten the seat belt.

https://www.forkliftpdfmanuals.com/

https://truckmanualshub.com/

5. Maintenance

See《Preventive maintenance schedule》for further information.

5.1 Daily Maintenance（8 hours）

1. Check Leaks

Check LPG, electrolyte, hydraulic oil, brake fluid, coolant, and oil in hydraulic transmission gear box.

Check the engine, hydraulic pipe connector, radiator and driving system for leaks. DO NOT use an open flame to check levels.

> ⚠ **Warning:**
> DO NOT operate truck if leaked fuel is found following pre-operational checks. Correct the leak before starting engine.

2. Check appearance

Visually check the lamps and meters for problems.

Check the tires, tire pressure and the entire truck for loose bolts

3. Check Fuel Mass

A fuel level gauge is provided on the indicator panel. Make sure the fuel level is sufficient for the day's work. The fuel filler port is located at the rear left pillar of the overhead guard.

4. Engine Oil Level Check

> ⚠ **Caution:**
> When checking the engine oil, place forklift on level ground, set parking brake and lower forks to the ground.
> Check engine oil when the engine is cool.

Remove the dipstick, clean the rod and reinsert. Pull it out again and check the oil level. The level should be within the marks on the dipstick.

https://www.forkliftpdfmanuals.com/

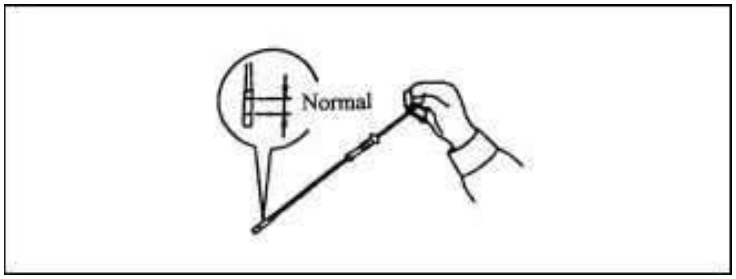

5. Check Coolant Level in the Radiator

Inspect the small reservoir tank to see if the coolant level is between Min and Max position when the engine is cool. If there is no coolant in the reservoir tank, add coolant to radiator, its freezing point is -35°C, and fill overflow bottle to MAX position

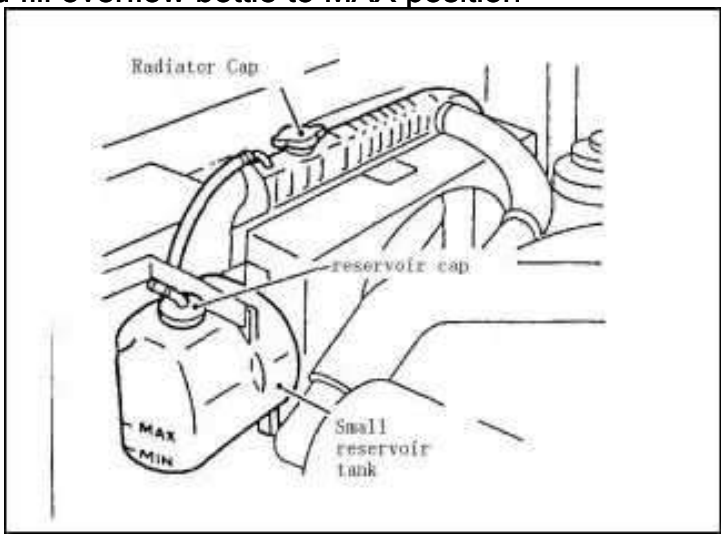

Caution:

Add clean water to radiator. If you use antifreeze, make sure you use the same brand of antifreeze.

Pay attention to water reservoir and cooling system in the hot season.

Warning:

When the water temperature of the engine is higher than 70 degrees Celsius, do not open the pressure cap of the radiator. Loosen cap slowly to allow steam to escape. After that, tighten cap securely. It is good practice to use a thick waste cloth or the like when removing the cap.

Do not wear glove when removing radiator cap. You may get burnt on your hand if hot water splashes on it.

Antifreeze is harmful to a person, if swallowed, disgorge at once and go to hospital.

Keep antifreeze away from children.

https://www.forkliftpdfmanuals.com/

https://truckmanualshub.com/

6. Hydraulic Oil Level

Check the oil level in the hydraulic oil tank.

The oil level should be between the two marks.

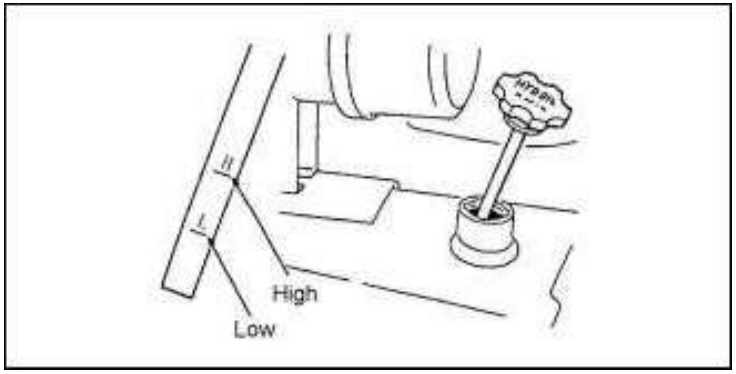

7. Brake Fluid Level Check

Check the fluid level in the brake fluid reservoir. The level should be between the two seams of the reservoir. When adding fluid, due care should be taken to prevent air from entering the brake tube.

⚠ Caution:

When adding fluid, due care should be taken to prevent dirt or water from entering the reservoir.

Brake fluid is dangerous to your health. You should always avoid contact with skin.

Replace brake oil

（1）Place forklift truck on level ground, place forks on the ground, apply park brake, put transmission gear into neutral position, and cut off engine.

（2）Remove rubber dustproof cap of oil-drain port, insert tube into oil-drain port and waste oil collection bottle, and loosen oil-drain screw. At the same time, have another in truck press brake pedal repeatedly. The brake oil should flow from oil-drain port, watch the liquid level of brake fluid reservoir, add new oil until the oil from oil-drain port is clean, and then screw down screw of oil-drain port.

（3）Have the person in truck depress brake pedal all the way and hold it there. At the same time, have the person at the oil-drain port loosen oil-drain port screw, and tell the person on truck to release brake pedal when the brake oil flows out and screw down oil-drain port screw. Repeat above operation several times until there are no bubbles in the brake oil. Watch the liquid level in brake oil reservoir; add new brake oil as the liquid level is falling.

https://www.forkliftpdfmanuals.com/

https://truckmanualshub.com/

8. Head Lamp Check

Make sure that the head lamp is lighting when the key is at “ON” position.

9. Turn Signal Check

Make sure that the turn signal operates properly by moving the turn signal lever.

10. Hand Brake Check

（1）drive truck slowly.

（2）loosen hand brake lever, stop the truck, and truck has no deviation.

11. Back-Up Lamp and Buzzer Check

The back-up lamp comes on and buzzer sounds when the shift lever or directional control lever is placed in reverse position.

12. Turning

Operate the truck slowly.

Turn the steering wheel to the left and then right 3 times respectively.

Check that the steering forces are equal to the right and left.

13. Horn

Press the horn button to make certain the horn sound is normal.

14. Driver’s Seat Adjustment

Make sure the driver’s seat is properly positioned. If not properly, shift the adjusting lever and move the driver’s seat to a position which provides easy access to all foot and hand controls.

15. Lifting Lever, Tilting Lever and Attachment Lever Check

Check the loading levers (for lift, tilt and optional attachment) for looseness and smooth operation.

Increase the rotate speed of engine, make certain that the lifting lever, tilting lever and attachment lever is in good work condition.

16. Instruments and Sensors

Make sure that hour meter, water temperature indicator, oil temperature indicator, transmission fluid sensor and fuel sensor etc., function properly.

17. Brake Pedal and Inching Pedal Check

Drive truck slowly, press down brake pedal, and brake lamp lights.

Drive truck slowly, press down inching pedal, the speed of truck decreases, press downward more, truck should stop.

18. Tire Inspection

Check the tires for damage, and the rims for damage.

19. Tire Pressure (Pneumatic Only)

Turn tire valve cap counter clock-wise and remove it. Using a tire pressure gauge, measure the inflation pressure, and adjust it to the specified pressure, if needed. After making sure there is no air leakage from the tire valve, reinstall the cap.

https://www.forkliftpdfmanuals.com/

https://truckmanualshub.com/

Check that each tire is not damaged at the tread surface or side face or bending at the rim.

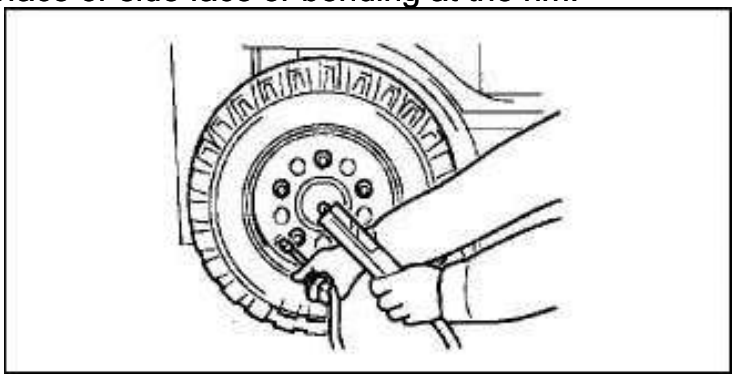

⚠ Warning: (Pneumatic)

1. Since the forklift truck needs tires that have a high inflation pressure to carry heavy loads, even a small bending of rims or damage at the tread surface could cause an accident.
2. When using an air compressor, first adjust the air pressure of the compressor. Failure to do so will cause a serious accident, since the compressor delivers the maximum pressure.
3. All nuts and bolts should be properly installed and tightened before inflating tire and rim assembly. An inflated tire contains potentially explosive energy. DO NOT overinflate.

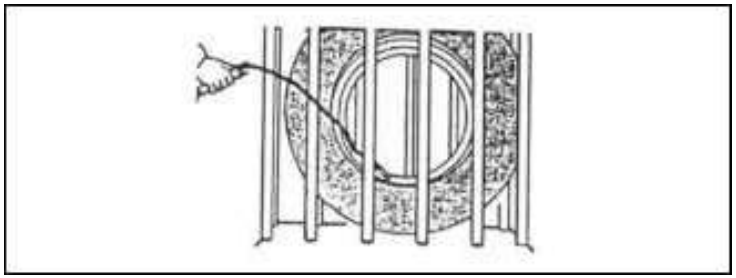

(Pneumatic tires only)

Tire Pressure GB/T2982-2001:		
Truck type	Front wheel	Rear wheel
2.0T-2.5T	860kPa	860kPa
3.0T-3.5T	830kPa	790kPa

5.2 Weekly Maintenance（40 Hours）

Increase the below content based on daily maintenance.

1. Air Filter

Perform maintenance on the air cleaner after 50-250 hours of operation.

Replace the filter element as needed

⚠ Caution

If the worksite has poor air quality the air filter needs to be cleaned or replaced more frequently.

https://www.forkliftpdfmanuals.com/

Under dusty work conditions, the cycle of maintain and change air cleaner will be short. It is advised to perform maintenance between 8-50 hours; replace it between 100-300 hours.

Maintain Method:

1. Gently remove the filter element from the canister. Avoid dislodging contaminants from the filter or knocking it against the canister.
2. Gently tap the filter element to dislodge any contaminants
3. With a clean soft rag, clean the inside surface of the canister. Be careful not to knock any contaminants into the outlet tube.
4. Inspect the filter element for voids, cuts or tears and replace if required.
5. Install the filter element into the canister.

2. Fan Belt Tension Check

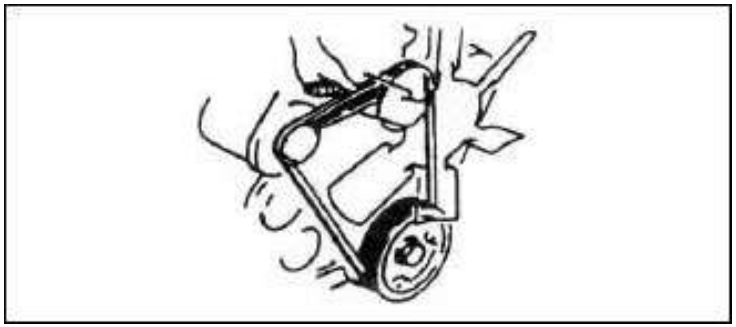

Stop the engine.

Use finger to press the belt at the midway point between the water pump pulley and the generator pulley by 10kg press, and check the drop distance to determine if it is up to standards.

Engine	Drop Distance （mm）
MAZDA 2.2L PSI 2.4L	11-13
4TNE98 4TNE92	New 8-12(<5min) Old 10-14(≥5min)

⚠ Warning:

If the belt is loose, cut out, or has no reserve it should be changed.

To avoid personal injury, DO NOT perform this check with the engine running.

https://www.forkliftpdfmanuals.com/

3. Power Shift Transmission Fluid Level

Open the inspections cover and remove the filler cap. Inspect the lever gauge to make sure that the fluid level is on the upper mark of the gauge.

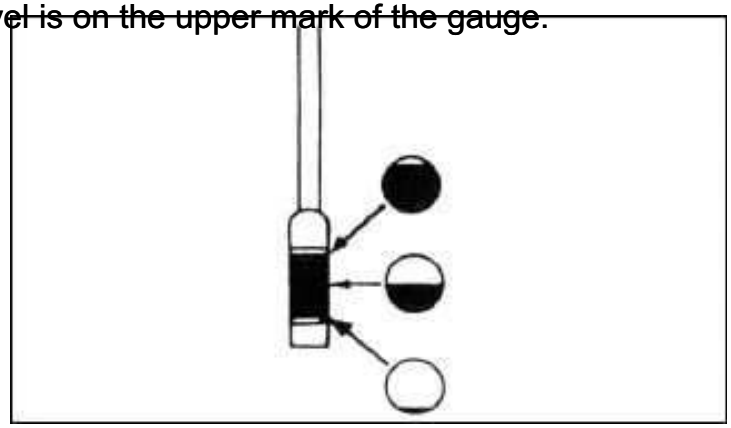

4. Mast and Forks

Check the mast and forks to make sure:

（1）There is no crack and bend on the forks, and the forks are installed on the fork bracket strongly.

（2）Check if there is oil leakage on the cylinder or tubing.

（3）Check the rollers' rotation.

（4）Check the mast for cracks or bends.

（5）Operate the lever for lifting, tilting and attachment. Check the overall condition of the mast.

5. Lift Chain Tension Check

（1）Raise the fork about 10-15 cm above the ground and make it vertical.

（2）Press middle of the chain by thumb. Make certain the tension for the right and left chains are even.

（3）Adjust the tension: Loosen the lock nut 1, screw the nut 2 and adjust the chain to make the equal tension, turning the adjusting nut 1 of the chain anchor pin.

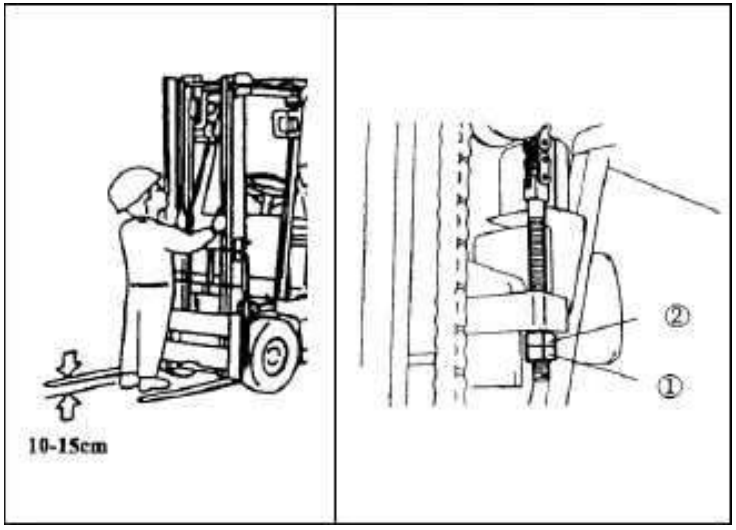

https://www.forkliftpdfmanuals.com/

https://truckmanualshub.com/

6. Lubrication of mast

Lubrication here on schedule, refers to figure as below:

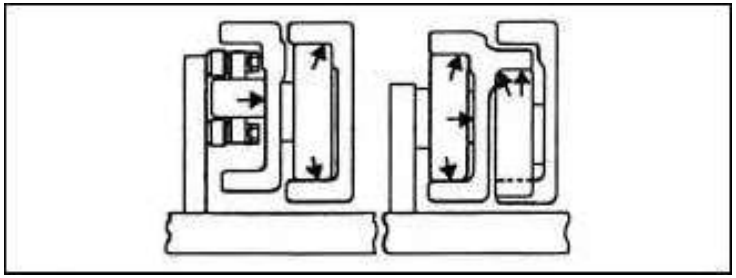

Mast

Paint lubrication grease on the slide support.

Note:

a. The periods of paint lubrication grease depend on the truck's work condition. If work is heavy, please paint much more grease on mast.

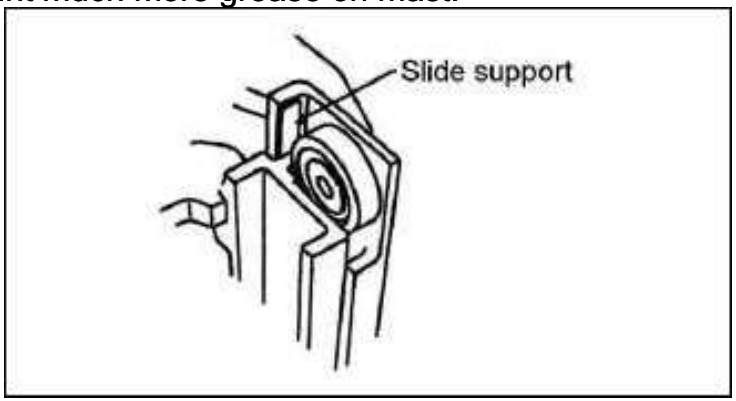

b. To assist with the truck's operation, paint some lubrication grease on the surface where the idler pulley and inside and outside masts touch.

⚠ Caution:

When applying lubrication grease; stop the truck on a smooth road, engine off and pull hand brake. Avoid injury to hand or body, and avoid falling off from high place. Keep safe.

7. Chain/Mast Lubrication

For the lubrication points of each of the following parts, see the Lubrication System Diagram.

（1）Mast Bearing Lubricate
（2）Brake Pedal
（3）Inching Pedal
（4）Steering Axle Shaft
（5）Steering Knuckle Main Bearing Lubricate
（6）Steering Rod Bar Pin
（7）Steering Cylinder Pin

8. Bolt and Nut Tightening

Reference the 《Maintain Cycle Chart》.

https://www.forkliftpdfmanuals.com/

9. Hub Nut Torque Check

Check that hub nuts are tightened to the specified torque.

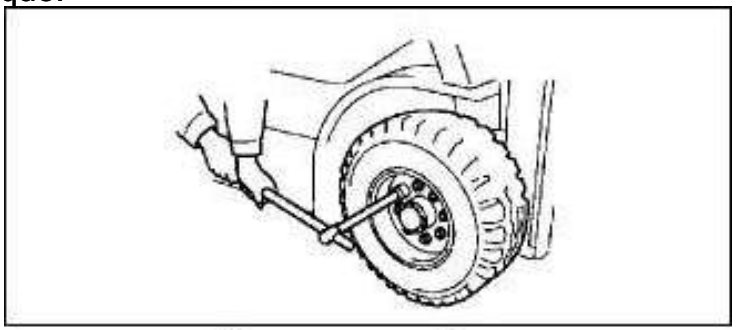

Driving Wheel （Front Wheel）

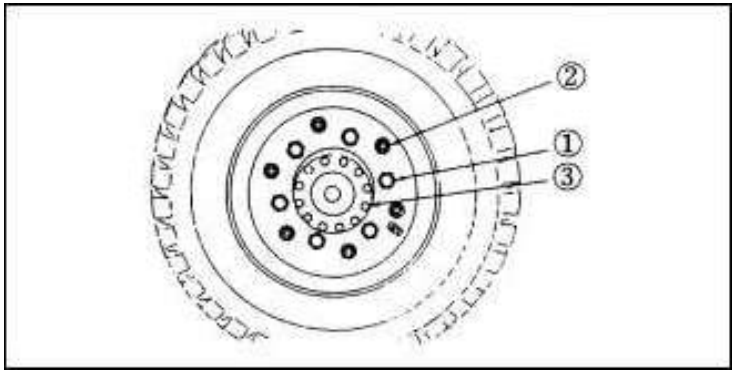

1- Hub nut
2- Divided rim bolt
3- Drive shaft bolt

Specified Torque N.m	
Capacity	2-3.5T
Hub nut	441-588

Steering Wheel（Rear Wheel）

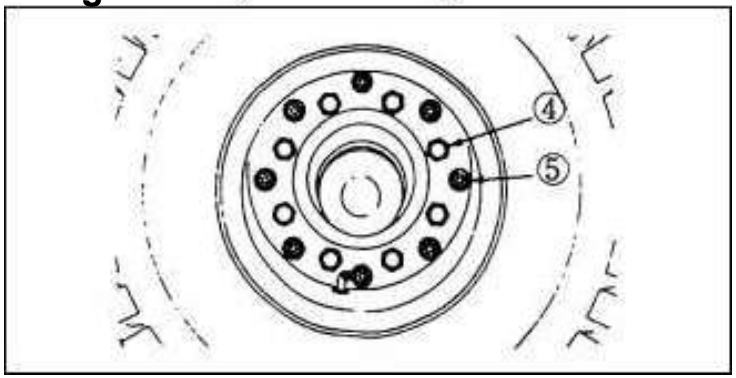

4- Rear hub nut

Specified Torque N.m

Capacity	2T-3.5T
Hub nut	157-176

5- Divided rim bolt

https://www.forkliftpdfmanuals.com/

10. Brake Pedal And Inching Pedal Check

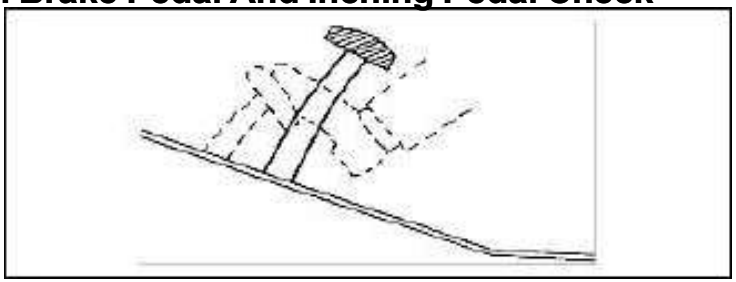

Depress the brake pedal fully when the engine is running, the distance between brake pedal and front soleplate should be more than60mm.

Check the inching pedal and clutch pedal using the same method.

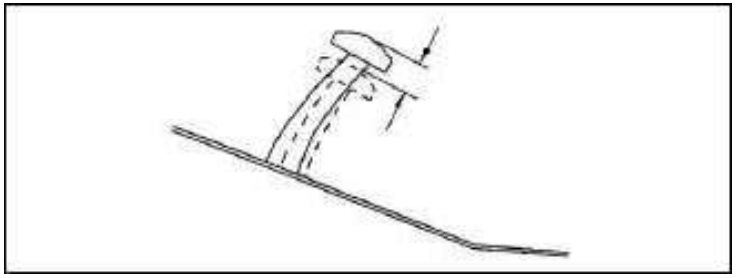

Height And The Free Clearance H:

	Free height	Press height	Free clearance
Brake pedal	120-130	≥60	1-3
Inching pedal	120-130	≥60	touching bolt of inching pedal – brake pedal:0 mm

https://www.forkliftpdfmanuals.com/

5.3 Monthly Maintenance (166 Hours)

Increase the below content based upon weekly maintenance.

1. Change Engine Oil And Oil Filter

（1）Start the engine, warm-up thoroughly, then shut off.

（2）Remove the cap from the oil filling port and the discharge plug from the oil pan. Let the oil flow out.

! Caution

Engine oil may be very hot.

·Milky engine oil indicates that the coolant has infiltrated the oil. Contact an authorized technician for repair.

·Very thin oil indicates that the oil contains gasoline. Contact an authorized technician for repair.

（3）Drain plug tightening torque: : 29 N·m-39 N·m

（4）Detach the oil filter using the appropriate tool.

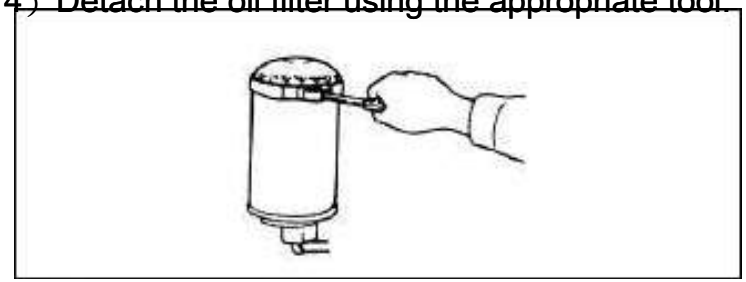

（5）Wipe the mounting surface of the oil filter with a clean cloth..

（6）Apply a small amount of engine oil to the rubber ring of the new oil filter.

（7）When installing a new oil filter, hand-tighten only. Do not tighten with a wrench.

（8）Refer to the Forklift Truck Fluid Use Chart and add the recommended engine oil.

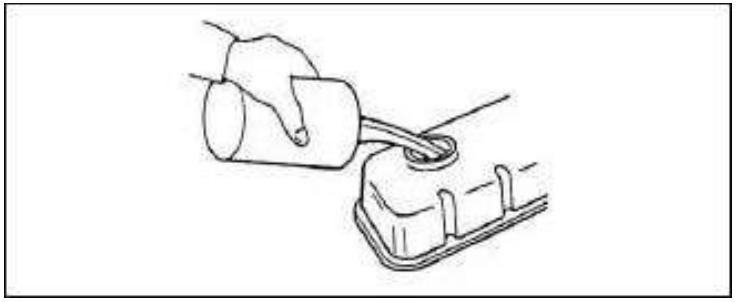

https://www.forkliftpdfmanuals.com/

https://truckmanualshub.com/

（9）Start the engine, check for oil leaks around oil pug and filter. If the leak is excessive, the part was not installed correctly.

（10）Warm-up engine, then shut-off and check oil level. Fill if needed. To check the oil fluid level, place truck on level ground.

2. Apply lubricant to front and rear of pin roll of tilt cylinder

Wipe any overflow clean.

3. Check the gear oil of drive axle housing

Change the oil after 200 hours. Change more frequently if operating truck in a dusty environment.

4. Change transmission fluid filter (first time, then semi-annually)

Check the hydraulic transmission fluid. Replace fluid if it appears to be contaminated.

Put the truck on level ground, lower forks to the floor, tilt the mast back, apply parking brake, put transmission in neutral position, and shut off engine.

> ⚠ **Warning:**
> Hot hydraulic oil and parts may cause injury. DO NOT touch the hot hydraulic oil or parts.

（1）Detach the rubber washer and the front baseplate.

（2）Detach the filter. Handle according to local regulations.

（3）Wipe the filter base clean. Confirm that the old washer on the base has been thoroughly removed.

（4）Apply small amount hydraulic fluid on the new filter element washer.

（5）Install filter by hand. When the filter get to pedestal, screw down an additional 1/2-3/4 turn.

5. Change hydraulic transmission oil (first time, then semiannually)

Park truck on level ground, lower the forks to the ground and tilt the mast back. Engage the parking brake, put transmission in neutral position, and turn off engine.

> ⚠ **Warning:**
> Hot hydraulic oil and parts will cause injury. DO NOT the hot hydraulic oil and parts.

（1）Put one case (volume is over 20 liters) under the transmission.

（2）Remove oil plug and drain oil.

（3）Clean oil plug then install.

（4）Take out the dipstick. Add hydraulic oil. See《Forklift Truck Fluid Use Chart》.

https://www.forkliftpdfmanuals.com/

https://truckmanualshub.com/

（5）Start the engine.

（6）Press the brake pedal, while idling. Put the transmission in forward and then in reverse to replenish the system with fluid.

（7）Place transmission in neutral and engage parking brake.

（8）Pull out the dipstick, inspect fluid position.

（9）If the fluid level is insufficient, add more fluid to bring the level up to in between the maximum and minimum marks.

（10）Check the filter and drain plug for leaks.

（11）Turn off the engine, install front base plate.

6. Air-Bleeding Fuel System（Diesel）

During fueling or draining water from separator, it's also necessary to bleed air in the fuel system.

（1）Loosen the purging bolt.

（2）Pump the hand pump until no more air comes out at the purging bolt.

（3）Tighten the purging bolt.

7. Drain Water from Separator（Diesel）

If the fuel filter alarm lights up while the engine is running you need to drain the accumulated water.

（1）Place a container under the fuel filter.

（2）Loosen the drain bolt（W15A）, then loosen the drain plug by turning 4 to 5 turns.

（3）Fasten the drain bolt（W15A）and plug after the water has been drained.

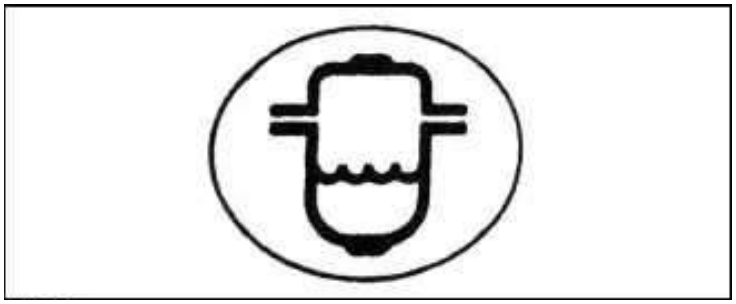

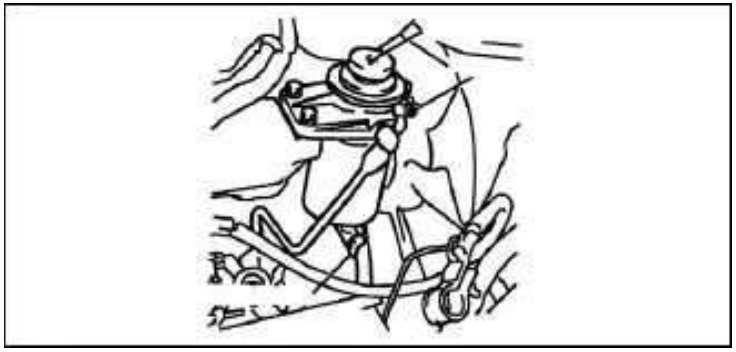

https://www.forkliftpdfmanuals.com/

https://truckmanualshub.com/

8. Exhaust Gas Check

Colorless	Normal: Complete Combustion
Black	Abnormal: Incomplete Combustion
White	Abnormal: Water In Combustion Chamber
Blue	Abnormal: Oil Burns

Warning:

DO NOT start the lift truck in a poorly ventilated space. There is carbon monoxide in the exhaust gas which can be very dangerous and potentially fatal.

5.4 Semi-Annual Maintenance (1000 Hours)

Increase the below content based on monthly maintenance.

1. **Brake oil fluid change**

   Park truck on level ground, lower the forks to the ground and tilt the mast back. Engage the parking brake, put transmission in neutral position, and turn off engine.

   Remove rubber dustproof cap of oil-drain port, insert tube into oil-drain port and waste oil collection bottle, and loosen oil-drain screw. At the same time, have another person in truck press brake pedal repeatedly. The brake oil should flow from oil-drain port, watch the liquid level of brake fluid reservoir, add new oil until the oil from oil-drain port is clean, and then screw down screw of oil-drain port.

   Have the person in truck depress brake pedal all the way and hold it there. At the same time, have the person at the oil-drain port loosen oil-drain port screw, and tell the person on truck to release brake pedal when the brake oil flows out and screw down oil-drain port screw. Repeat above operation several times until there are no bubbles in the brake oil. Watch the liquid level in brake oil reservoir; add new brake oil as the liquid level is falling.

   Caltex DOT3 or Choice HZY3 brake liquid note add after factory.

Caution:

Prevent dust and water from getting into oil when adding brake fluid. The brake fluid can be harmful. Thoroughly rinse with water upon contact with skin.

https://www.forkliftpdfmanuals.com/

https://truckmanualshub.com/

2. Steering Wheel Locked Device Lubricate

Apply lubricating grease on the steering wheel locked device.

2. Hydraulic Oil Change

Park truck on level ground, lower the forks to the ground and tilt the mast back. Engage the parking brake, put transmission in neutral position, and turn off engine.

> ⚠ **Warning:**
>
> Hot hydraulic oil and parts may burn you. DO NOT touch the hot hydraulic oil or parts.

（1）Put one case (60 liters or greater) under the hydraulic reservoir. Dismantle the oil plug, and drain the hydraulic fluid into the container.

（2）Dismantle hydraulic dipstick and oil box cover.

（3）Take out the magnet from oil box to clean and rinse the oil orifice of box bottom by hydraulic oil.

（4）Clean and install the oil plug.

（5）Fill hydraulic oil box. Reference《Table for the oil used in the truck》.

（6）Startup the engine and operate multiple valve joystick and turn system, fill hydraulic oil in all system.

（7）Check each hydraulic component and pipeline for leaks.

（8）Close the engine, retract all mast cylinder rods, check the oil level of hydraulic oil box. Add oil to fill mark.

4. Change Hydraulic Return Oil Filter, Respirator And Strainer

Park truck on level ground, lower the forks to the ground and tilt the mast back. Engage the parking brake, put transmission in neutral position, and turn off engine.

（1）Loosen the bolt of hydraulic fluid reservoir cover plate assembly.

（2）Detach the hydraulic return filter from cover plate.

（3）Install new hydraulic return filter by hand.

（4）Take out the fluid absorption filter mesh from fluid reservoir.

（5）Install new filter by hand.

（6）Install oil box top cover board and screw down bolt.

（7）Take out respirator.

（8）Clean by lotion and dry.

（9）Install respirator.

（10）Start the engine and operate hydraulic system,

https://www.forkliftpdfmanuals.com/

https://truckmanualshub.com/

let hydraulic oil in all system. Check for leaks.

（11）Close the engine, retract all mast cylinder rods, check the oil level of hydraulic oil box. Add oil at fill mark.

5. Change Hydraulic Transmission Oil

Refer to ‘Change hydraulic transmission oil’ from ‘Maintain monthly’.

6. Check, clean, change fuel filter (Diesel)

In the dust and dirty work condition, clean fuel filters per one month and replace every six months.

（1）Remove out the fuel filter.

（2）Remove transducer.

（3）Before installing new one, install transducer existing, put a little fuel on the filter airproof.

> ⚠ **Caution:**
>
> Before installation, do not add fuel to filter, as this may accelerate the wear of fuel system parts.

（4）Install new filter.

（5）Turn the new filter till the airproof mat adheres to surface.

（6）Screw down 2/3 turns.

5.5 Annual Maintenance (2000 hours)

Perform the following maintenance in addition to the semi-annual maintenance.

1. Replace the engine cooling fluid

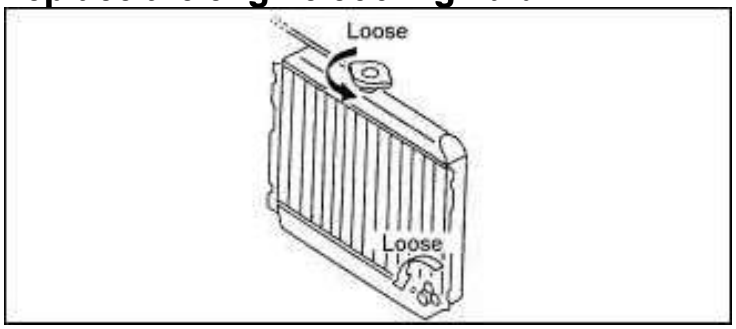

（1）Open the radiator cover and loosen the drain cover, let the coolant flow out, then wash the cooling system.

（2）Screw down the drain cover.

（3）Add cooling fluid to radiator up to the top.

（4）Let the engine run fully.

（5）Stop the engine, after cool down fully, still add cooling fluid to radiator up to the top, and add cooling fluid to coolant reservoir “MAX” position.

（6）Check the drain cover for leaks.

https://www.forkliftpdfmanuals.com/

https://truckmanualshub.com/

Warning:

To prevent burns, when the water temperature of the engine is higher than 70 ° C, DO NOT open the pressure cap of the radiator.

The engine coolant fluid is designed to prevent rust and freezing/overheating. See《Table for the oil used in the truck》.

2. Front-wheel bearing change and lubrication

See the drive axle wheel contents in the Maintenance Manual.

3. Rear-wheel bearing change and lubrications

See the steering axle contents in the Maintenance Manual.

4. Change steering axle gear oil

Put the truck on level ground. Put transmission in neutral, shut off engine.

（1）Remove the oil plug, put oil to a case. Clean oil plug.

（2）Install oil plug.

（3）Remove breather plug and oil fluid position plug. Put the oil from orifice bend to steering axle shell until oil overflows from level plug.

（4）Press level and install breather plug.

（5）Start-up forklift. Run engine let the steering wheel control handle at neutral.

（6）Take out level plug. Keep oil level until overflow.

5.6 Others

1. Fuse and Relay

Fuse and relay are fixed in the control box near the battery.

Please replace old fuse with fuse with the same capacity.

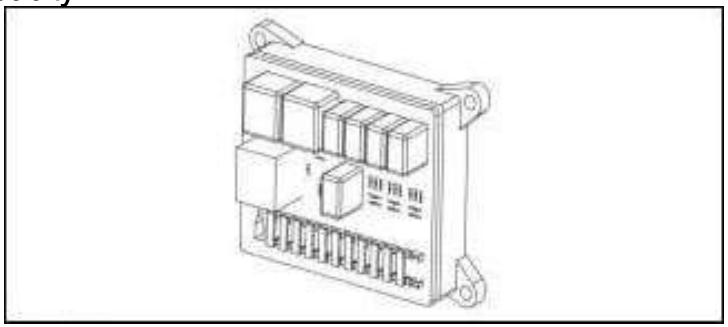

2. Change of tires

Warning:

When using an air compressor, first adjust the air pressure of the compressor. Failure to do so will cause a serious accident, since the compressor delivers the maximum pressure.

To ensure safety, put the tire in a defend casing while inflating.

https://www.forkliftpdfmanuals.com/

Front Wheel

（1）Place lift truck on level concrete.

（2）Start engine and raise carriage about 100mm height.

（3）Place chocks behind rear wheels to prevent movement of forklift.

（4）Loosen wheel nuts 1-2 turns each by turning them counter-clockwise.

（5）Tilt mast fully backward, and place a wooden block under each side of outer mast.

（6）Tilt mast forward until front tires are raised from surface.

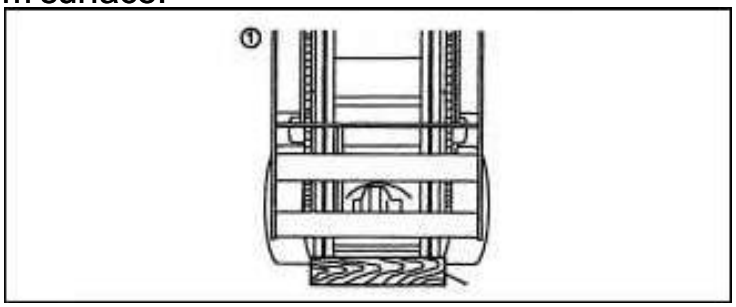

Caution:

Do not allow loose nuts before the front wheels leave the ground.

（7）Support forklift truck by putting additional wooden blocks under each side of the front-end frame as shown below. Stop the engine.

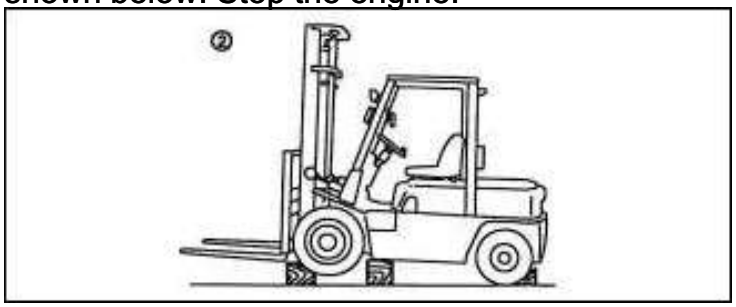

（8）Take out the wheel nuts and replace the front wheel tire.

Warning:

a. When removing tire from wheel rim, do not remove rim set bolts and nuts before releasing air. (Pneumatic)

b. Make sure that wooden blocks used to support lift truck are solid, one-piece units.

c. Never get under forklift while it is supported only by wooden blocks.

https://www.forkliftpdfmanuals.com/

（9）Retighten the wheel nut temporarily.

（10）Start the engine, and take out the wooden block.

（11）Tilting backward the mast and lower down the mast slowly, then take out the wooden block under the outer mast and rear wheel.

（12）Retighten the wheel nut with correct torque.

（13）Inflate tire again to correct air pressure.

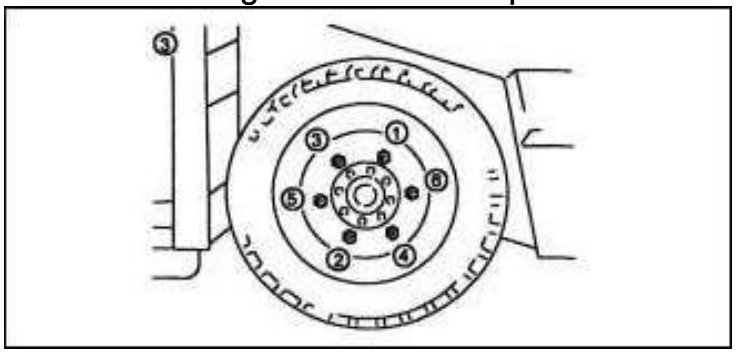

Rear wheel

（1）Place lift trucks on level concrete.

（2）Pull the parking brake lever and place chocks before front wheels to prevent movement of forklift.

（3）Put the lifting jack under the counterweight.

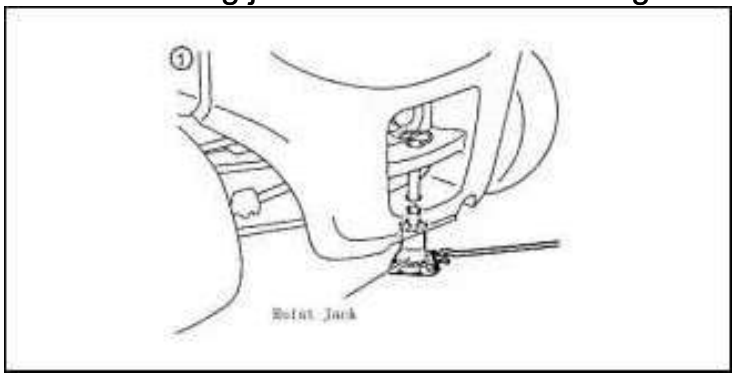

Caution:

Make sure the jack capacity is greater than 2/3 of service weight of forklift.

（4）Loosen wheel nuts 1-2 turns each by turning them counter-clockwise.

Warning:

Do not remove wheel nuts until rear tires are raised from ground.

https://www.forkliftpdfmanuals.com/

（5）Raise the forklift by swinging the rod of jack until it is off of the ground. Support forklift truck by putting additional wooden blocks under each side of the front-end frame as shown below.

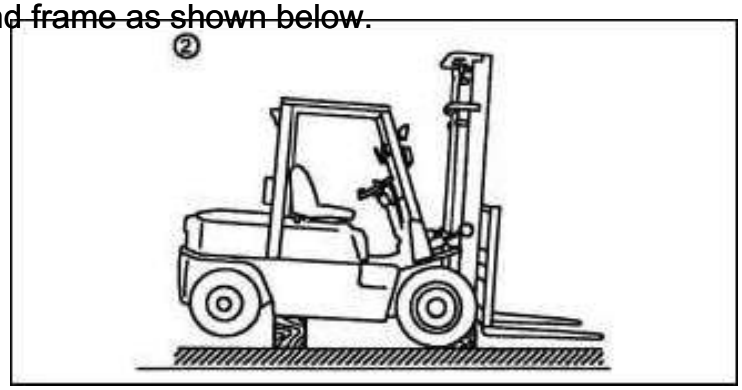

（6）Take out the wheel nut of rear wheel, and then replace the wheel.

Warning:

a. When removing tire from wheel rim, do not remove rim set bots and nuts before releasing air.

b. Make sure that wooden blocks used to support lift truck are solid, one-piece units.

c. Never get under forklift while it is supported only by wooden blocks.

（7）Retighten nuts as shown in figure below:

（8）Remove the wooden block under chassis body. Let down the forklift slowly. Then take away the chocks before the front wheel.

（9）Retighten the wheel nut with the correct torque.

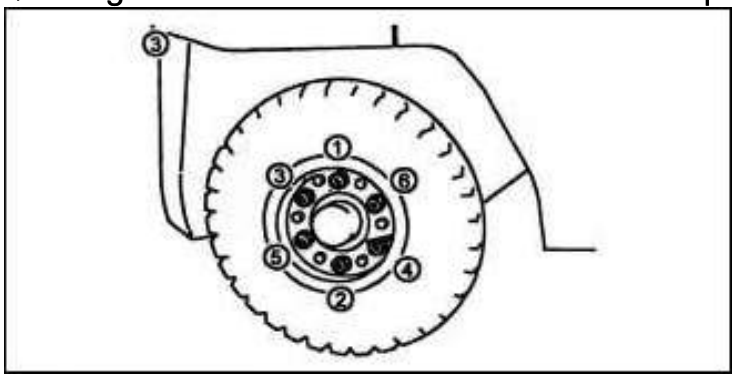

（10）Inflate tire again to correct air pressure.

3. Check Temperature

Based on the temperature, choose the suitable viscosity oil.

https://www.forkliftpdfmanuals.com/

https://truckmanualshub.com/

4. Clean the radiator and radiator fins

Caution:

Dust may fly into your eyes, so make sure to wear safety glasses.

If the radiator fins are clogged, it will lead to overheating. Use compressed air, vapor or water to clear.

Caution:

Clean the radiator fins by using compressed air or vapor, place the muzzle to radiator a right angle.

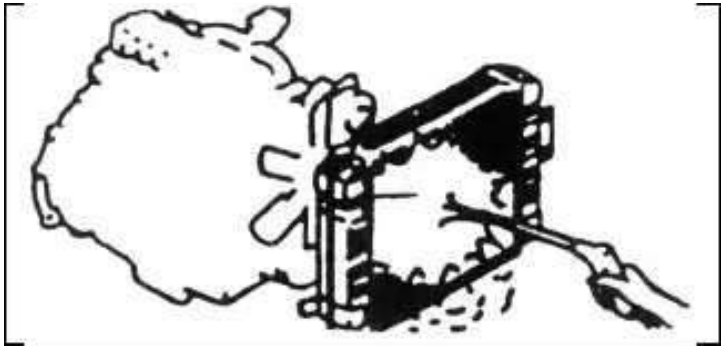

5. The operation of engine while overheated

If the engine is too hot, DO NOT stop it at once. Instead, perform the following steps:

（1）Reduce speed

（2）Open the engine cover to improve ventilation to the engine chamber.

（3）Stop engine when water temperature drops.

（4）Check the coolant level. Add coolant if needed.

https://www.forkliftpdfmanuals.com/

https://truckmanualshub.com/

6. Structure and Stability of Truck

A thorough understanding of forklift physics and stability is very important to the safe operation of the forklift.

Caution	Truck Physics

The basic structure of the truck is mast (includes mast and forks) and body (includes tire).

The lift truck keeps the balance of weight between the truck body and the load on the forks with the center of the front wheels as a fulcrum when the rated capacity load is placed in position.

Due care should be paid to the weight and the center of gravity of loads to maintain the stability of the truck.

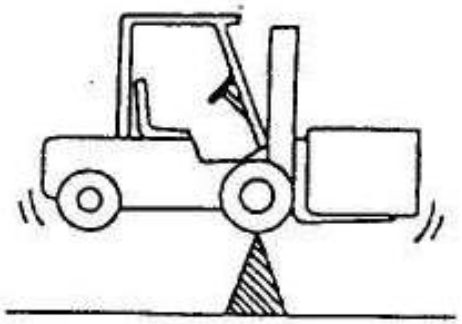

https://www.forkliftpdfmanuals.com/

Caution | **Load Center of Gravity**

There is difference because of the loads' shape, gravity, such as box, board and large roller. It is very important to distinguish the between the centers of gravity of different shaped loads. The location of the CoG of both the truck and the load is a factor.

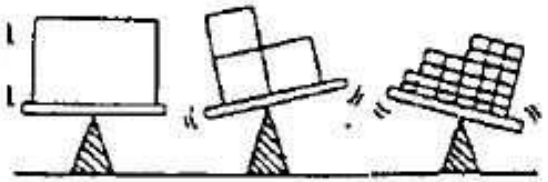

Caution | **The Stability Zone Of The Barycenter**

In order to make the truck stable, the combined center must be within the triangle which is made up of the two points where the two front wheels touch the ground and the midpoint of the back driving axle.

If the combined center is in the front driving axle, the two front wheels become two fulcrums, and the truck will overturn. If the combined center departs the triangle, the truck shall overturn in the corresponding direction.

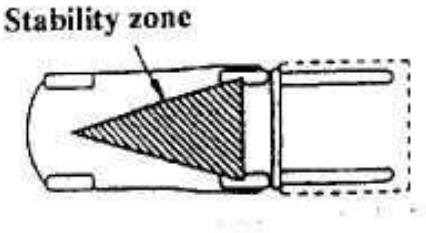

https://www.forkliftpdfmanuals.com/

https://truckmanualshub.com/

Warning!

If the truck is going to tip over, do not attempt to get out of the truck, because the speed of tipping is much faster than you. You should firmly grasp the steering wheel holding it close to your chest, and lean away from the direction of the tip. ALWAYS WEAR YOUR SEATBELT.

https://www.forkliftpdfmanuals.com/

Caution | **Gravity and Stability**

Forklift stability depends on the combined center of gravity of the forklift and load. When the forklift is unloaded, the center of gravity (CoG) remains unchanged. When the forklift is loaded, the center of gravity is formed by the combined center of gravity of the forklift and load.

The load's center of gravity depends on whether the mast is tilted forward or backward, raised or lowered, which means that the combined center of gravity also changes accordingly.

The forklift's combined center of gravity is determined by the following factors:

- Load size, weight and shape;
- Lifting height;
- Mast tilt angle;
- Tire inflation pressure;
- Acceleration, deceleration and turning radius;
- Driving surface conditions and inclination;
- Attachment type.

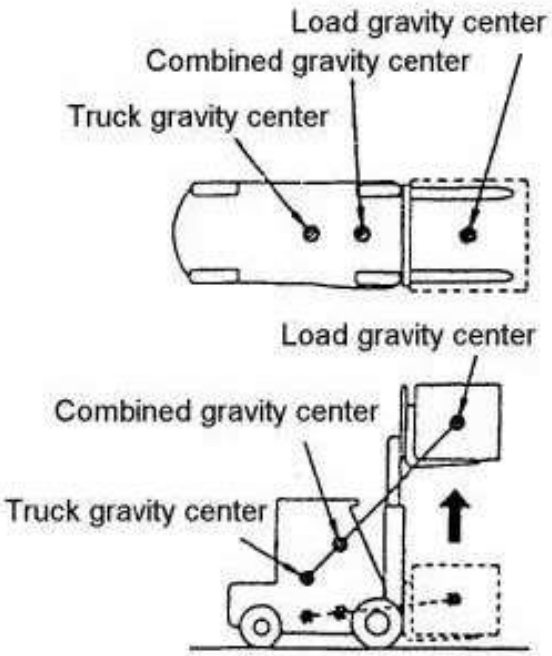

https://truckmanualshub.com/

Caution	Maximum Load

The distance between the load center and the front surface of forklift or load backrest (select the min) on the forklift is called LOAD CENTER DISTANCE. The max gravity that the truck can load is called MAX LOAD on condition that the load is on the load center distance. The relationship of MAX LOAD and LOAD CENTER DISTANCE is specified on the load capability chart. If the load center is moved near the front of forklift, the load should be reduced.

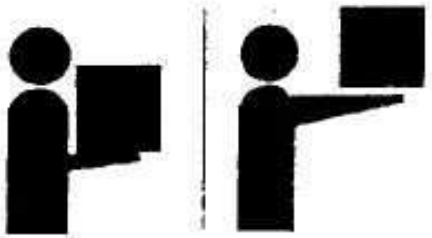

Caution	Load Capability Chart

This chart shows the relationship of MAX LOAD And the location of LOAD CENTER DISTANCE. Check whether the load and load center distance is in the range referred by the chart. Put the most important parts near the load backrest if the shape of goods is asymmetrical.

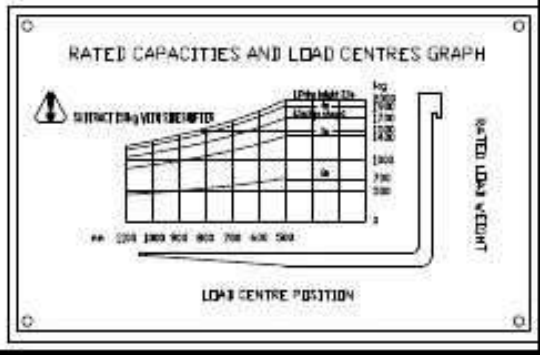

https://www.forkliftpdfmanuals.com/

https://truckmanualshub.com/

Caution	Speed and Acceleration

A static object keeps its static station which is not affected by outside force, one dynamic object moves with the same speed which is not affected by outside force, this is inertia.

Because of inertia, one force affected backward when the truck is moving, one force affected forward when the truck is stopping.

It is very dangerous to press the brake suddenly. It may result in capsizing or sliding down of the load because of huge force to the front.

Centrifugal force is present during turning and its direction is from the turning center to the outer. If the force is strong enough, it may result in the capsizal of the truck. The right-and-left stable zones are very small, so the truck's speed must be reduced when turning to prevent capsizing. If the truck is carrying a load with the forks raised high, the possibility of capsizing is very great.

https://www.forkliftpdfmanuals.com/

https://truckmanualshub.com/

7. Operation

Warning:

Before operating the truck, check all controls and warning devices for proper operation. If any damage of fault is found, don't operate truck until corrected.

7.1 Start-up

Starting gasoline engine

(1) Make sure that the shift lever(s) and loading levers are in neutral and hold positions.

(2) Cold engine:

Pull out the choke button fully. Depress the accelerator pedal to the floor two or three times and release it. With your foot OFF the pedal, crank the engine by turning the ignition key to "START". Release key when engine starts.

(3) Warm engine

Do not pull out the choke button. Press down the accelerator pedal halfway and cold crank the engine by turning the ignition key to "START". Release key when engine starts.

Caution:

The time to start should be less than 5 seconds each attempt, and the interval between attempts should be at least 2 minutes.

After engine has started

Check the rotation (sound or gear) of the engine.

·Check the combustion (or misfiring) sound.

·Check the condition (density) of exhaust.

Make sure that all the warming lamps are off.

·After thoroughly warming up the engine, operate the loading levers 2 to 3 times in their full stroke and check their working conditions.

7.2 Traveling

Hold the knob on the steering wheel with your left hand and get the right hand ready for the controls, lightly putting it on the wheel.

Set the bottom of the fork 15 to 20 cm above the ground and fully tilt back the upright.

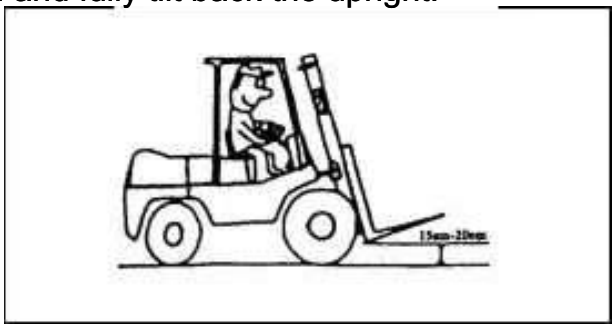

Check the safety around the machine and give a signal when starting the engine.

https://www.forkliftpdfmanuals.com/

https://truckmanualshub.com/

Gear shifting

·Always stop the truck before reversing the direction of travel.

·Shift the shifting lever.

Slow down

Release accelerator pedal a little, and press the brake pedal, if necessary.

Steering

Unlike general passenger-cars, the steer wheels are located at the rear of the truck. These cause the rear of the truck to swing out when a turn is made.

Slow down and move toward the side to which you are turning. The steer hand wheel should be turned a bit earlier than when turning the front wheels of a car.

Stopping or parking the truck

（1）Slow down and press the brake pedal to stop the truck (in the case of clutch type machine, the clutch pedal is used).

（2）Place the shift lever in neutral.

（3）Apply the parking brake by pulling up on the parking brake lever.

（4）Lower the forks on the ground, and tilt the mast all the way forward.

（5）Place the key switch in “OFF” position to shut down the engine. For diesel trucks, pull out the engine stop button. Remove the key and take it with you.

⚠ Caution:

DO NOT dismount from a moving truck.
Never jump off the truck.

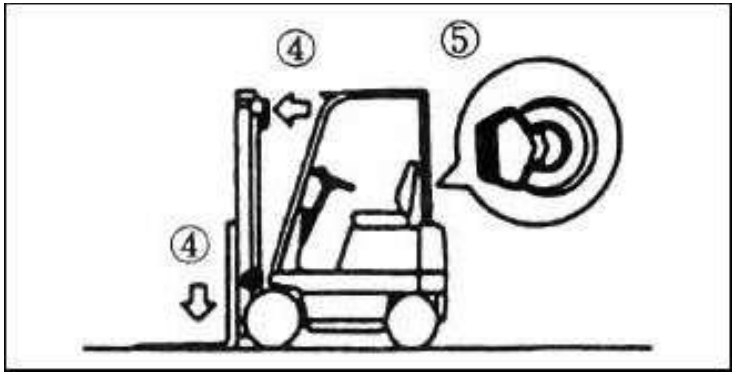

https://www.forkliftpdfmanuals.com/

https://truckmanualshub.com/

7.3 Pick Up

·The forks should be adjusted to maintain proper balance of load.

·Place the machine in front of the load to be handled.

·The pallet should be evenly positioned across both forks.

·Insert forks into the pallet as far as possible.

·To raise loads from the ground.

（1）First lift the forks 5 to 10 cm off the ground or floor and make sure loads rest stable.

（2）Then, tilt the mast backwards fully and lift forks up to 15 to 20 cm off ground then start moving.

When handling bulky loads which restrict your vision, operate the truck in reverse except when climbing grades.

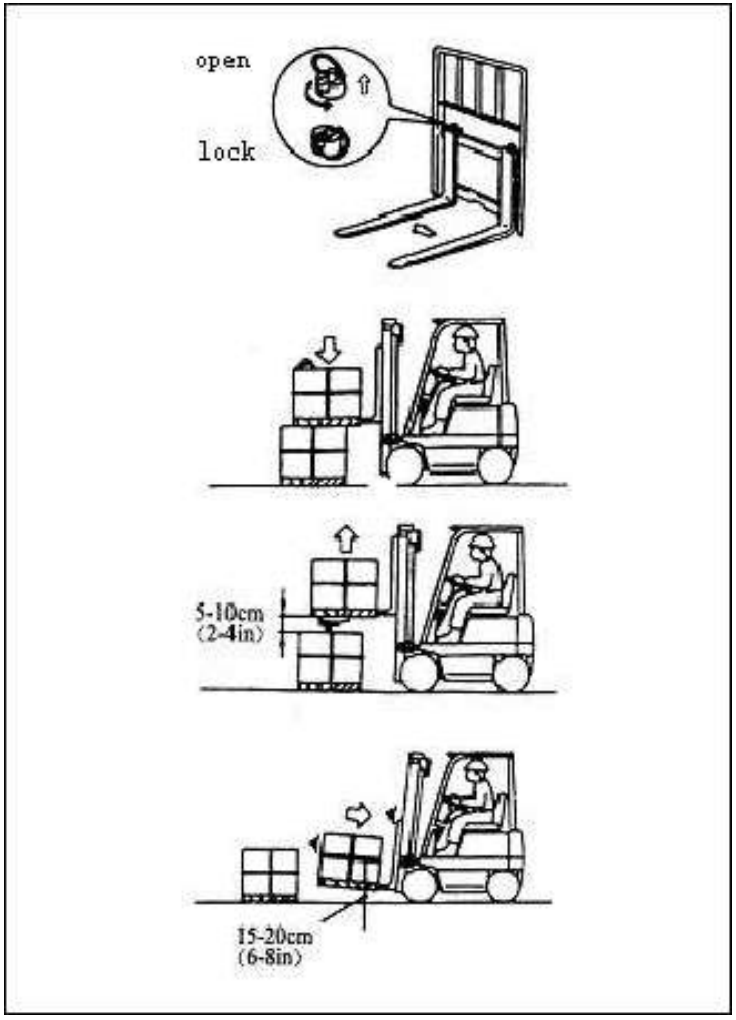

https://www.forkliftpdfmanuals.com/

https://truckmanualshub.com/

7.4 Stacking Load

·Slow down when approaching the load deposit area.

·Stop the truck right in front of the area where your load is to be deposited.

·Check the condition of the deposit area.

·Tilt the mast forward until forks become horizontal. Raise forks until they are a little higher than the deposit position.

·Move forward to place the load directly over the desired area and stop the truck.

·Make sure your load is just over the desired area. Slowly lower the load into position. Make sure the load is securely stacked.

·Disengaged forks from the load by using necessary lift-tilt operation and then back away.

·After making sure the fork tips leave the load, lower the forks to the basic position (15 to 20 cm off the ground).

·Tilt the mast backwards.

Warning:

Never tilt the mast with loads upraised 2m or more.

Don't leave or dismount from the truck when the load is raised high.

7.5 Remove Load

Slow down when approaching the area where the load is to be retrieved.

Stop the truck in front of the load so that the distance between the load and fork tips is about 30 cm.

Check the condition of the load.

Tilt the mast forward until forks become horizontal. Elevate forks up to the position of the pallet or skid.

Make sure forks are positioned properly for the pallet. Move forward slowly to insert forks into the pallet as far as possible and then stop the truck.

Raise the forks 5 to 10 cm off the stack.

Caution:

If the forks cannot be fully inserted, use the following procedure: move forward and insert the forks 3/4 of the way. Raise the forks 5 to 10 cm and move backward 10 to 20 cm with the pallet or skid on the forks, then lower the pallet or skid on the stack. Move forward again to insert the forks fully.

Check all around the truck to insure that the path of travel is unobstructed and back away slowly.

Lower forks to a height of 15 to 20 cm above the ground. Tilt the mast backward fully and move to the desired area.

https://www.forkliftpdfmanuals.com/

https://truckmanualshub.com/

8. Parking

8.1 Parking Daily

（1）Park your truck on a level surface-preferably in an open area. If parking on a slope is unavoidable, position the truck so that it crosses the slope and block the wheels to prevent accidental roll.

（2）Make sure the shift level is in the neutral position.

（3）Apply the parking brake.

（4）Shut the engine down and move the lift and tilt levers several times so that the inner pressure in the hydraulic tubes will be released.

（5）Remove the key and take it with you.

> ⚠ **Warning:**
>
> You should tell the manager if you find any problems with the truck, and have them repaired immediately.

Do the following things:

（1）Clean oil and grease stains with a cloth and water on the truck body.

（2）Check the whole truck, especially the tires.

（3）Fill the fuel tank with the proper fuel.

（4）Check for leaks of hydraulic oil, engine oil, LPG and coolant.

（5）Fill lubricate grease.

（6）Check whether the junction plane between the nuts of wheel boss and the piston of hydro cylinder are loose, and whether the surface of piston has been pulled.

（7）Check mast rollers operate smoothly.

（8）Lift the lifting cylinder to the top and fill it with oil.

（9）In cold weather, it is not necessary to drain the antifreeze, but the water should be completely drained from the radiator.

https://www.forkliftpdfmanuals.com/

https://truckmanualshub.com/

8.2 Long Term Storage

When parking the truck for a prolonged period, place the truck body and counter weight on blocks to reduce the load on the two rear wheels.

Warning:

a. The block must be single and hard enough to support the truck.

b. Don't use blocks higher than 300 mm （11.81 inch）.

c. Lift the truck to place it on the blocks.

d. Use the same size blocks under the left and right sides of the truck.

e. While the truck is supported by the blocks, swing the truck forward, backward, left and right, check its safety.

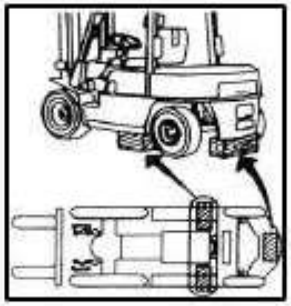

Perform the following maintenance for long term truck storage:

（ ）

1. Remove the battery and recharge it once a month, and store it in a shady place.

（2）Brush antirust oil on exterior exposed parts, such as piston rods and axles.

（3）Cover ventilation-plug and air-filter to keep out moisture.

（4）Start the forklift at least once a week. If the coolant has already been drained, then add coolant to the radiator. Then run the engine at low speed.

（5）DO NOT park the forklift on asphalt surfaces during summer.

https://www.forkliftpdfmanuals.com/

https://truckmanualshub.com/

8.3 Forklift Operation after Long-Term Storage

（1）Remove the antirust oil from the exposed parts.

（2）Vent the gear oil of the crankcase, driving axle, transmission box (clutch type), hydraulic transmission box (torque converter type) clear it and add with new gear oil.

（3）Clean the hydraulic oil reservoir and fuel reservoir (removing any dirt or water) and add with new hydraulic oil/fuel.

（4）Check the clearance of the valve, gas valve cap and other parts on the engine.

（5）Add antifreeze or water to the required level.

（6）Install the battery.

（7）Check basic truck functions like starting, running, turning, lifting etc.

（8）Warm-up the truck.

https://www.forkliftpdfmanuals.com/

https://truckmanualshub.com/

9. Maintenance

9.1 Preventive Maintenance Schedule

O—Check, revise, adjust
×—Replace

Note:

（1）If the work place has a lot of dirt or other pollutants, time between maintenance intervals should be decreased.

（2）If problems like loss of engine power, sudden increase in truck noise, or black smoke occur, check the truck immediately. The problems may be corrected by adjusting the diesel nozzle pressure and fuel atomization.

（3）It is important to do timely inspections and maintenance to keep the truck in good working condition.

（4）Do not ignore routine inspection and maintenance

（5）Only use original approved parts

（6）Don’t use different oil when changing or adding oil.

（7）Dispose of waste oil or electrolyte liquid according to local environmental protection laws and regulations.

（8）Follow the maintenance schedule.

（9）After performing maintenance, keep a record.

（10）Only repair the fork lift truck if you have been properly trained.

Counterbalance weight

Model of truck	2 t	2.5 t	3.0 t	3.5 t
Counterbalance weight	1192 kg	1534 kg	1780 kg	2100 kg

https://www.forkliftpdfmanuals.com/

Check Item	Service required	Every 1 months (166hrs)	3 months (500 hrs)	6 months (1000hrs)	1 year (2000hrs)
Engine	1. Check the valve clearance is correct	First time O	O	O	O
	2. Replace engine oil（1）	First time ×	×	×	×
	3.Replace the oil cleaner（1）	First time ×	×	×	×
	4. Replace the air cleaner element	First time ×	×	×	×
	5. Drain the water of oil water separator（diesel engine）	O	O	O	O
	6.Clean the exterior of radiator（1）	O	O	O	O
	7. Clean or replace the filter element of air cleaner	O	O	×	×

The remaining part of engine maintenance, refer to engine manual.

NOTE:

(1) If the work place has a lot of dirt or other pollutants, time between maintenance intervals should be decreased.
(2) If problems like loss of engine power, sudden increase in truck noise, or black smoke occur, check the truck immediately. The problems may be corrected by adjusting the diesel nozzle pressure and fuel atomization

https://www.forkliftpdfmanuals.com/

https://truckmanualshub.com/

		Every			
Check Item	Service required	1 months (166hrs)	3 months (500 hrs)	6 months (1000hrs)	1 year (2000hrs)
LPG Engine	1.Piping or pipe connector portion for gas leakage (1)	O	O	O	O
	2.Tar in vaporizer, Discharge	O	O	O	O
	3.Piping or pipe connector portion for damage	O	O	O	O
	4.Mounting bracket of LPG cylinder for looseness or damage	O	O	O	O
	5.Filter for LPG		O	O	×

The remaining part of engine maintenance, refer to engine manual.

NOTE:

(1)If the work place has a lot of dirt or other pollutants, time between maintenance intervals should be decreased.

https://www.forkliftpdfmanuals.com/

		Every			
Check Item	Service required	1 months (166hrs)	3 months (500 hrs)	6 months (1000hrs)	1 year (2000hrs)
Torque Converter Transmission	Replace oil filter element	First time ×		×	×
	Replace oil (1)	First time ×		×	×
Driving axle	Check differential oil, and replace if necessary	O	O	O	×
	Check connection and retighten to spec.	O	O	O	O
Brake and inching system	Check and adjust brake pedal for free travel and clearance	O	O	O	O
	Check or Replace brake fluid	O	O	×	×
	Check for proper brake operation	O	O	O	O
	Check inching brake pedal for free travel and clearance	O	O	O	O
Hydraulic system	Check for oil level, Change oil（1）			×	×
	Replace oil return suction strainer（1）			×	×
	Proper work of the hydraulic oil pump	O	O	O	O
	Proper work of control Valve	O	O	O	O
	Check for oil leaks, looseness, collapse, deformation and damage	O	O	O	O
	Clean the hydraulic oil reservoir			O	O
Lifting	Check chain for tension	O	O	O	O

https://www.forkliftpdfmanuals.com/

		Every			
Check Item	Service required	1 months (166hrs)	3 months (500 hrs)	6 months (1000hrs)	1 year (2000hrs)
system	Lubrication of chains	O	O	O	O
	Check chain and bearing for damage or deformation	O	O	O	O
	Check lifting cylinders for proper operation and connection	O	O	O	O
	Check tilting cylinders for proper operation and connection	O	O	O	O
	Check for forks and stopper pins for damage or wear	O	O	O	O
	Check fork base and hook welding for defective cracks or wear	O	O	O	O
	Check roller of mast and lifting bracket parts for cracks or damage	O	O	O	O

https://www.forkliftpdfmanuals.com/

https://truckmanualshub.com/

9.2 Torque Specifications

Unit：N•m

Bolt Diameter mm	Bolt Strength Grade			
	4.6	5.6	6.8	8.8
6	4-5	5-7	7-9	9-12
8	10-12	12-15	17-23	22-30
10	20-25	25-32	33-45	45-59
12	36-45	45-55	58-78	78-104
14	55-70	70-90	93-124	124-165
16	90-110	110-140	145-193	193-257
18	120-150	150-190	199-264	264-354
20	170-210	210-270	282-376	376-502
22	230-290	290-350	384-512	512-683
24	300-377	370-450	488-650	651-868
27	450-530	550-700	714-952	952-1269
30	540-680	680-850	969-1293	1293-1723
33	670-880	825-1100	1319-1759	1759-2345
36	900-1100	1120-1400	1694-2259	2259-3012
39	928-1237	1160-1546	1559-2079	2923-3898

ATTENTION:

- Use grade 8.8 bolts and screws for all important connections.
- Grade marked on head. Unmarked bolts are grade 8.8.

https://www.forkliftpdfmanuals.com/

https://truckmanualshub.com/

9.3 Periodic Replacement of Chain and Hydraulic Parts

Some parts are not checked during routine maintenance. Please refer to the table below for the average service life of these parts. Replace them when their service life has expired, sooner if they damaged.

Name of key safe part	service life (years)
Brake hose or hard tube	1-2
Hydraulic rubber hose for lifting system	1-2
Lifting chain	2-4
High pressure rubber hose or tube for hydraulic system	2
Grease cup for brake fluid	2-4
Tube for LPG	1
Sealing member, rubber articles inside of hydraulic system	2

https://www.forkliftpdfmanuals.com/

9.4 Forklift Fluid Use Chart

Description	Shop Sign，Code Name	Capacity(L)	Remark
LPG Engine Oil		60	2.0t-3.5T
Gasoline Engine Oil	See engine manual		
Hydraulic oil	L—HM32 (arctic-alpine: L—HV32)	45-50	2.0t-3.5T
Hydrodynamic Power Transmission Oil	DEXRON—III（Caltex）	8.5	2.0t-3.5T
Gear oil	GL—5 85W/90	8	2.0t-3.5T
Brake Liquid	Caltex DOT3 brake liquid to be used	1.5	
Antirust antifreeze liquid	-35# car antifreeze（add when leaving factory）or FD-2 antifreeze	10-11	
Industrial Vaseline	2#		Electrode of Storage battery
Lubrication grease	Use lithium grease		

Remark：the 2T-3.5T trucks have been added antirust antifreeze liquid, you need not discharge the liquid even in cold weather. Add the liquid according to original requirement when need. Replace the liquid every 2 years normally. If the truck has not been added antirust antifreeze liquid, users can add the liquid according to requirement. The cooling water must be discharged at winter if the truck has not been added antirust antifreeze liquid.

https://www.forkliftpdfmanuals.com/

9.5 Lubrication System Drawing

1. General purpose lithium complex grease

2. Engine lubricating grease

3. Gear oil

4. Hydraulic oil

5.Converter ass-torque oil

6. Brake oil

Notice:

1. The detail of lubricating oil for different truck are listed in the “Table for the oil used in the truck”

2. Lubrication for mast, please see the 8 hour (daily or every shift) check

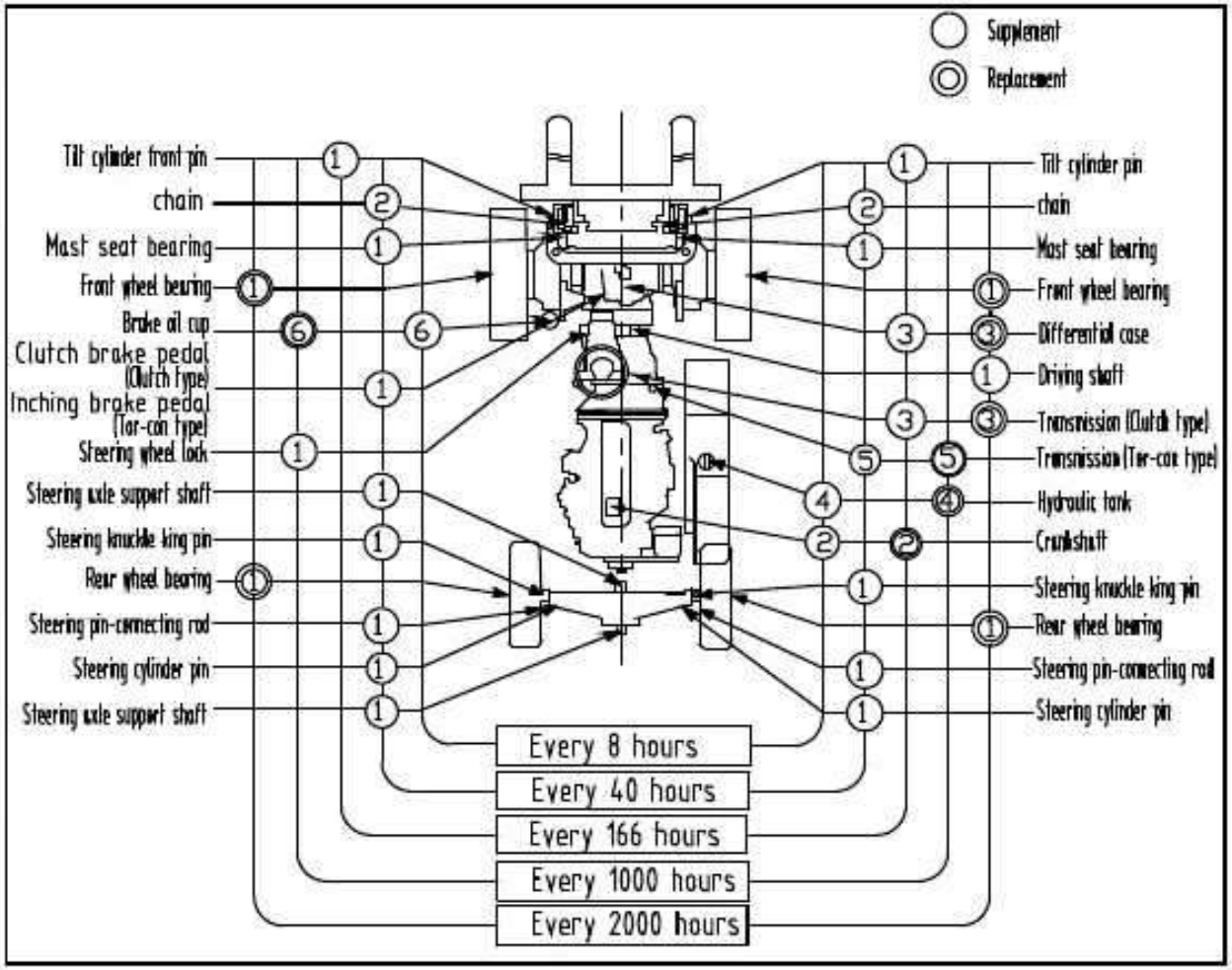

https://www.forkliftpdfmanuals.com/

https://truckmanualshub.com/

9.6 Environmental Protection

1. Please perform truck cleaning and maintenance at specified locations.
2. Before removing the pipe, connector and related parts, please use the specified container for the used liquid (include antifreeze liquid, engine oil, hydraulic oil, hydrodynamic power transmission oil, gear oil, brake liquid, lubrication grease) and used battery.
3. The used liquid referred above should only be disposed of according to local environment protection laws and regulations.

NOTE: The antifreeze liquid, engine oil, hydraulic oil, hydrodynamic power transmission oil and gear oil should be replaced when it is below 70°C (155°F) to avoid personal injury.

https://www.forkliftpdfmanuals.com/

10. Labels

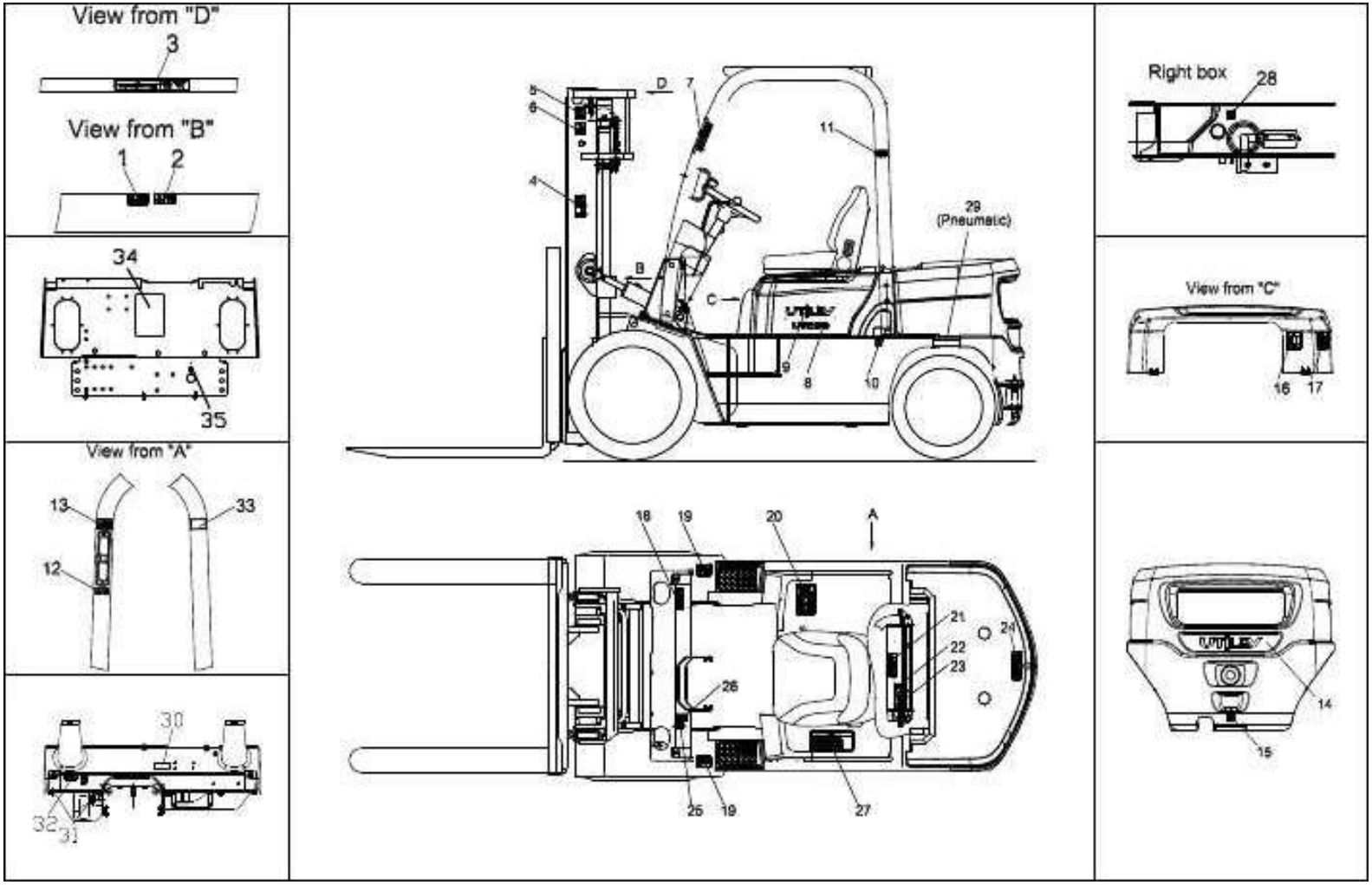

https://www.forkliftpdfmanuals.com/

https://truckmanualshub.com/

1.Danger Label	2. Mast Warning Label	3. Mast Warning Label	4. Fork Warning Label
5. Lift Point Label	6. Truck Lift Label	7. Top Over Warning Label	8. Model Label
9. Utilev Label	10. Fuel Label:	11. Driving Warning Label	12. No Water Label
13. Ethyl Ether Warning Label	14. Utilev label	15.Tie Down Label	16. Gas Spring Lock Label
17. Hood Cover Open Label	18. Nameplate Label	19. No Riders Label	20. Nameplate Label:
21. Hand Injury Risk Label	22. No Boron Antifreeze Label	23. Antifreeze Label	24. LPG Label
25. Parking Brake Label	26. Park Brake Warning Label	27. Operator Warning Label	28. Hydraulic Oil Label
29. Tire Pressure Label (Pneumatic)	30. LP/GAS fuel system selector label	31 Shift Label	32. Operate Labels
33. Noise Level Label	34. Lubrication System Label	35. Horn label	36.Emergency Stop Label
37. Serial No.			

https://www.forkliftpdfmanuals.com/

https://truckmanualshub.com/

1. Danger Label:

WARNING: You may be seriously or fatally injured if your body is squeezed between the mast, the frame, and/or the overhead guard. If there is a need to inspect or maintain this part, DO NOT perform the inspection or maintenance until after the engine has been turned off and the mast and carriage appropriately secured. This forklift cannot carry passengers and must not be operated from outside the cab.

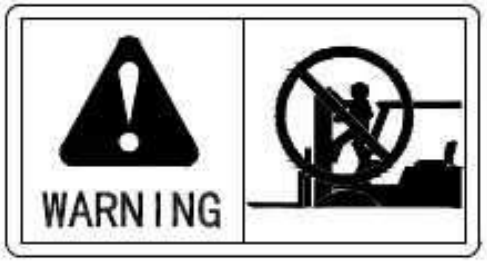

2. Mast Warning Label:

The inner and outer masts and fork carriage are vertically sliding parts. DO NOT put your hand or any other body part between the inner and outer masts. Failure to follow this warning may lead to serious bodily injury or death.

If there is a need to inspect or maintain this part, DO NOT perform the inspection or maintenance until after the engine has been turned off and the mast and carriage appropriately secured.

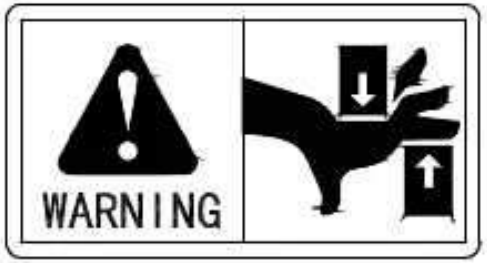

https://www.forkliftpdfmanuals.com/

https://truckmanualshub.com/

3. Mast Warning Label:

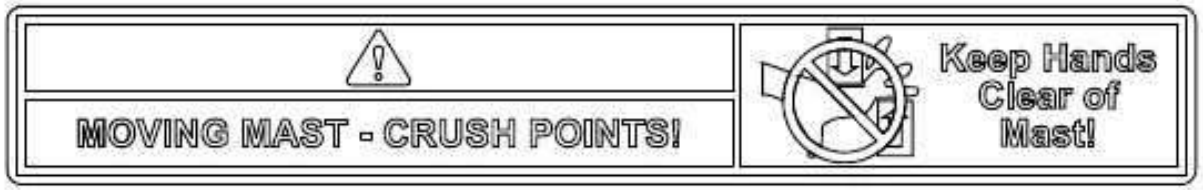

4. Fork Warning Label: DO NOT stand on or under the forks or carriage; failure to follow this warning may lead to serious bodily injury or death.

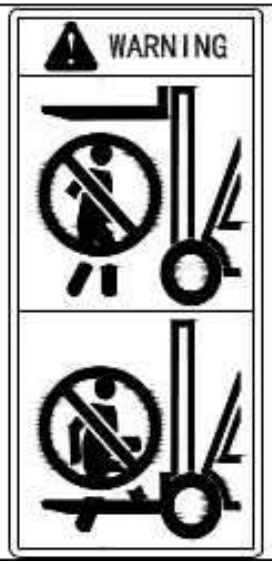

https://www.forkliftpdfmanuals.com/

https://truckmanualshub.com/

5. Lift Point Label: Use these labeled points for lifting forklift truck. Lifting from other points may damage forklift.	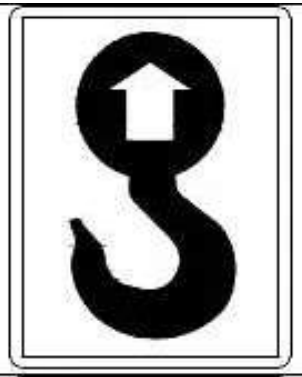
6. Truck Lift Label: Use lift points as shown with appropriate chains or cables. Improper lifting or lifting equipment may result in damage to the forklift or cause serious bodily injury or death.:	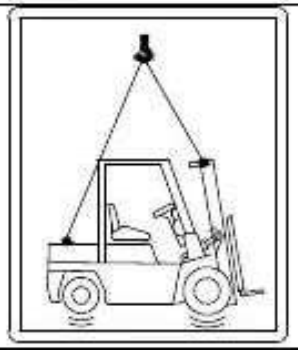

https://www.forkliftpdfmanuals.com/

https://truckmanualshub.com/

7. Tip Over Warning Label:

https://www.forkliftpdfmanuals.com/

https://truckmanualshub.com/

8. Model Label (Pneumatic):	UT30P
8. Model Label (Cushion):	UT30C
9. Utilev Label:	UTILEV

https://www.forkliftpdfmanuals.com/

10. Diesel Fuel Label: Indicates the forklift is equipped with a diesel engine and should only use diesel fuel.	
10. Gasoline Label:	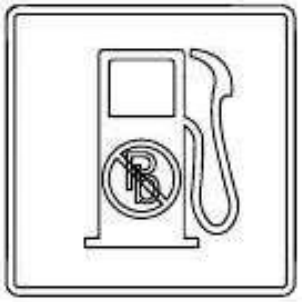
11. Driving Warning Label 1:	

https://truckmanualshub.com/

12. No Water Flushing Label: This is an air intake passage for the engine. Entry of water through the air inlet is strictly forbidden.

Keep water from entering here when the forklift is being flushed with water.

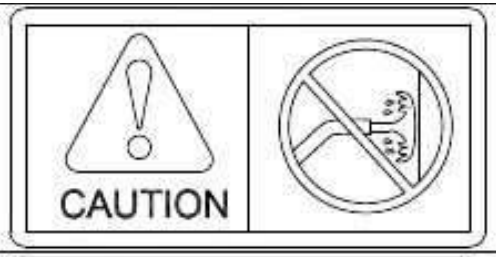

13.Ethyl Ether Warning Label: Do not use either to start forklift.

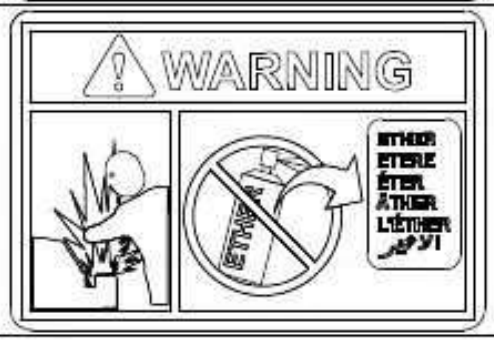

14. Utilev Label:

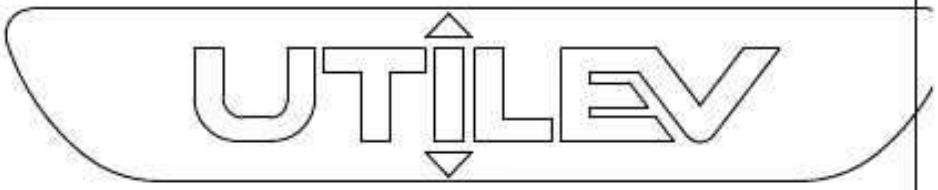

https://www.forkliftpdfmanuals.com/

15. Tie Down Label: Use these labeled points for securing forklift during transporting.	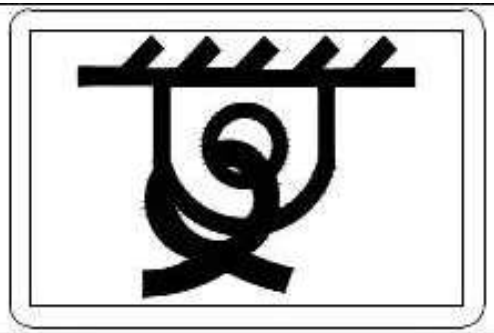
16. Gas Spring Lock Label:	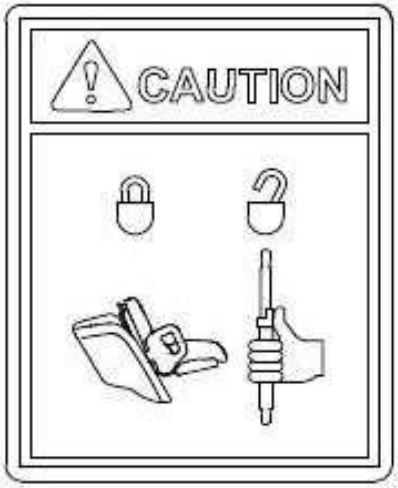

https://www.forkliftpdfmanuals.com/

https://truckmanualshub.com/

17. Hood Cover Open Label:	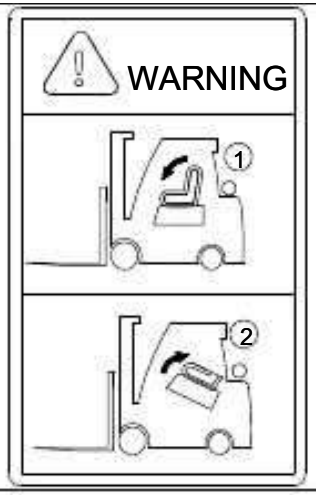
18. Nameplate Label:	NOTICE TO USER The U.S.A. Occupational Safety and Health Act of 1970 and other national safety codes require a new plate if this unit is equipped other than stated on plate. Obtain the correct plate from your authorized dealer.

https://www.forkliftpdfmanuals.com/

19. No Riders Label: DO NOT allow riders on the forklift.

20. Nameplate Label: Contains specifications for the forklift.

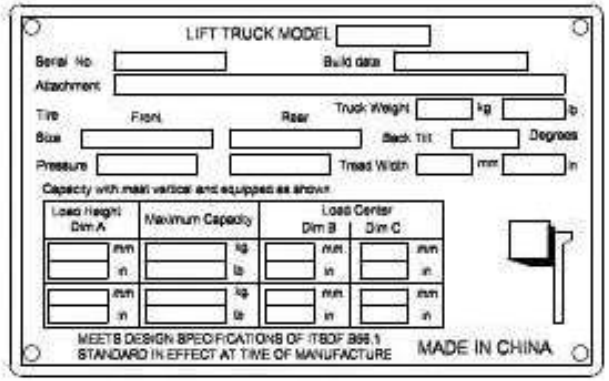

https://www.forkliftpdfmanuals.com/

https://truckmanualshub.com/

21. Hand Injury Risk Label:	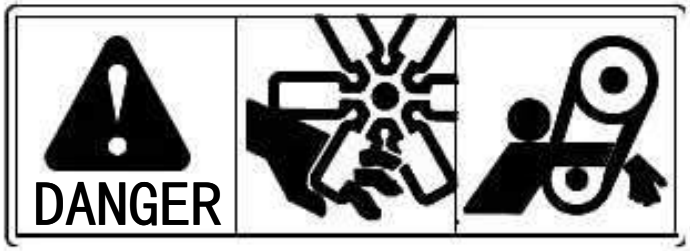
22. No Boron Antifreeze Label:	USE ONLY BORON FREE TYPE ANTIFREEZE WHEN ADDING OR REPLACING COOLANT
23. Antifreeze Label:	THIS COOLING SYSTEM IS PROTECTED WITH CORROSION INHIBITED ANTIFREEZE TO -30°F (-35°C)

https://www.forkliftpdfmanuals.com/

24. LPG Label:

25. Parking Brake Label: Indicates the direction to move the park brake lever to set or release it.

- Away from opperator will release the park brake
- Towards the operator will set the park brake.

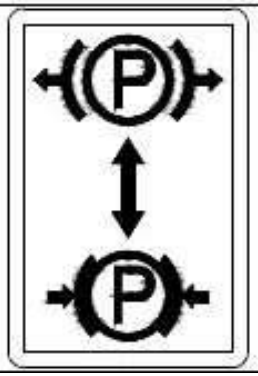

https://www.forkliftpdfmanuals.com/

26. Park Brake Warning Labels: (Operator Presence)

WARNING

APPLY PARKBRAKE before leaving seat. Parkbrake not automatically applied.

ALARM will sound if parkbrake is not applied.

27. Operator Warning Label:

WARNING

SERIOUS OR FATAL INJURY MAY RESULT TO YOURSELF OR OTHERS IF NOT FOLLOWED

- This lift truck should not be operated by anyone who is not authorized and properly trained.
- Read the Operator Manual and all warnings carefully, and make yourself familiar with your lift truck.Operator Manual and Service Manual are supplied with this truck or available from our forklift truck dealers.
- Inspect and check your lift truck daily before and after use. Do not operate faulty or damaged lift trucks.
- Repair work should be done by authorized and trained persons only.
- To protect from falling objects, make sure the Overhead Guard and Load Backrest Extension are correctly mounted and in good condition.
- Before starting engine, always set forward/reverse lever in neutral, with hand brake on.
- Drive carefully, keeping forks and attachments as low as possible & fully tilted back - Never Forward.
- Keep a careful look out for people, obstructions and the path of travel. Watch clearance, especially overhead and tail swing. Yield right of way to pedestrians.
- Do not stick hands, feet or other parts of your body outside the operator compartment.
- Drive forward when you are climbing a slope with a load. Drive in reverse when you are descending with loads. Do not turn while on a slope.
- Slow down before turning. Avoid any sudden start, stop or turning. Lateral tip over can occur if truck is improperly operated.
- Do not load lift truck over capacity limit designated on the load chart. Do not lift unstable loads.
- This lift truck is not designed for raising or transporting people. Do not use lift truck for those purposes under any circumstances.
- Before you get off lift truck, make sure the hand brake is set, lower forks or attachments, put forward/reverse lever in neutral position and turn off key switch. Do not park on a slope.

https://www.forkliftpdfmanuals.com/

https://truckmanualshub.com/

28. Hydraulic oil label	
29. Tire pressure Label (Pneumatic):	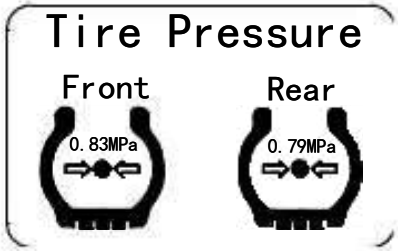
30. LP/GAS fuel system selector Label:	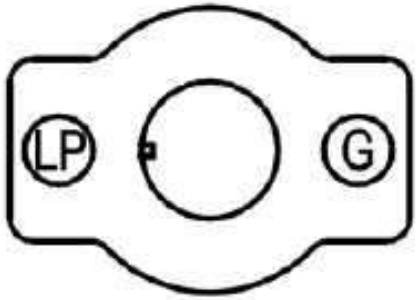

https://www.forkliftpdfmanuals.com/

https://truckmanualshub.com/

31 Shift Label:	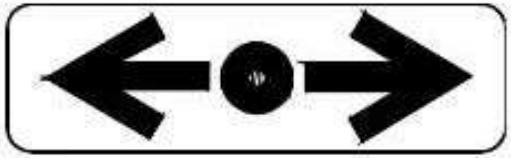
32. Operate Labels:	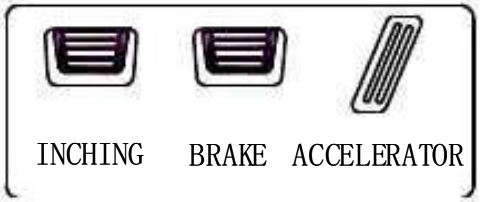
33. Noise Level Label:	

https://www.forkliftpdfmanuals.com/

34. Lubrication System Label:

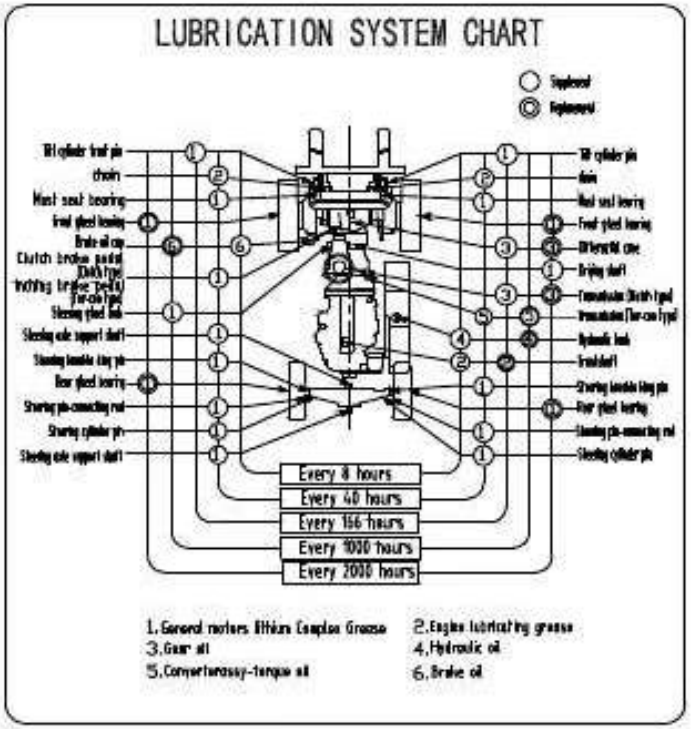

35. Horn Label:

https://www.forkliftpdfmanuals.com/

https://truckmanualshub.com/

36.Emergency Stop Label:

37. The position of the model series on the truck body

Each truck has a unique truck body series number, its print position is at the right front side of the truck body

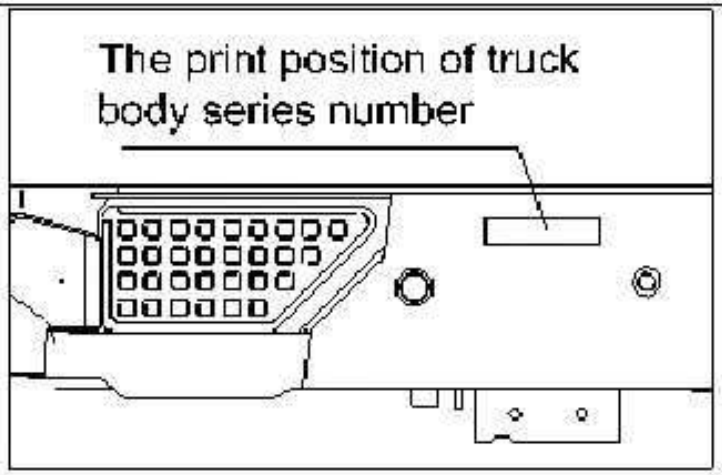

https://www.forkliftpdfmanuals.com/

https://truckmanualshub.com/

11. Truck Transporting, Lifting, Towing

Hoist the truck

Use steel wire ropes through the holes in the two sides of the outside mast's beam and the hook of the counter balance, then use the lifting device to hoist the truck.

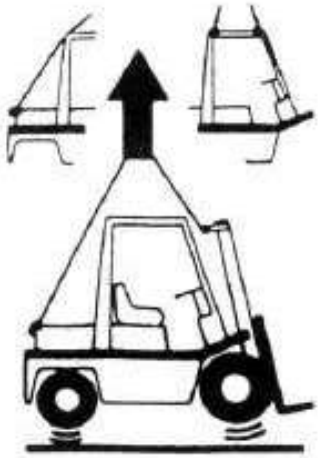

Warning:

·When hoisting the truck, DO NOT coil the overhead guard with the steel wire.
·The steel wire ropes and the lifting device must be very firm to support the truck because the truck is very heavy.
·DO NOT lift the truck by the overhead guard.
·When lifting the truck, stay clear of the area underneath the truck.

https://www.forkliftpdfmanuals.com/

https://truckmanualshub.com/

Transporting

The forklift truck is designed for material handling and short-distance transportation only.

It is not designed for long-distance transportation. The Fork Lift Truck must be transported by ship, train or lorry, of 5T loading. Tighten the brake lever, place wood blocks to the front and rear wheels and bind the truck body with enough rope, to avoid slippage during transportation.

Towing

The towing rod on the bottom of the counter balance is used to pull and drag the truck, For installing the rod, first remove the towing rod and then install the ropes. After that, replace the rod.

Warning:

·ONLY connect the wire ropes to the towing rod.
·DO NOT pull a load secured by steel wire ropes suddenly.

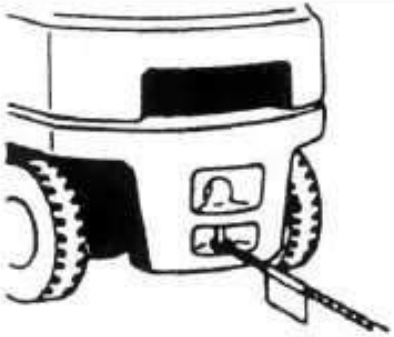

https://www.forkliftpdfmanuals.com/

https://truckmanualshub.com/

12. Performance Parameters of IC Forklift

Model	UT25C (2.2L LPG) UT25C (2.2L DUAL)	UT32C (2.2L LPG) UT32C (2.2L DUAL)
Rated capacity (kg)	2500	3000
Load center (mm)	500	500
Max. lifting height (mm)	3000	3000
Free lifting height(mm)	130	135
Max lifting speed(mm/s)	600	540
Tilting angle(°)	5/8	5/8
Max traveling speed(km/h)	21	19.5
Max grade ability(%)	26	32
Min turning radius(mm)	2150	2210
Ground clearance(mm)	65	80

https://www.forkliftpdfmanuals.com/

https://truckmanualshub.com/

Model		UT25C (2.2L LPG) UT25C (2.2L DUAL)	UT32C (2.2L LPG) UT32C (2.2L DUAL)
Overall dimension	Long (mm) To face of forks	2380	2435
	Width (mm)	1078	1123
	High (mm)	2115	2115
Service weight (kg)		3815	4210
Tire (F/R)		21X7X15 16X6X10.5	21X8X15 16X6X10.5
Voltage/Capacity (V/A.h)		12/60	12/60
No-load braking distance(M)		≤6	≤6
Engine	Type	**MAZDA 2.2L**	
	Rated capacity	37kW / 2700r/min	
	Max torque	135N·m / 1900 r/min	

https://www.forkliftpdfmanuals.com/

https://truckmanualshub.com/

Model	UT20P (2.2L LPG) UT20P (2.2L DUAL)	UT25P (2.2L LPG) UT25P (2.2L DUAL)	UT30P (2.2L LPG) UT30P (2.2L DUAL)	UT35P (2.2L LPG) UT35P (2.2L DUAL)
Rated capacity (kg)	2000	2500	3000	3500
Load center (mm)	500	500	500	500
Max. lifting height (mm)	3000	3000	3000	3000
Free lifting height(mm)	140	140	155	155
Max lifting speed(mm/s)	580	580	460	370
Tilting angle(°)	6/12	6/12	6/12	6/12
Max traveling speed(km/h)	20	20	18	18
Max grade ability(%)	20	20	20	18
Min turning radius(mm)	2260	2320	2480	2520
Ground clearance(mm)	105	105	130	130

https://www.forkliftpdfmanuals.com/

https://truckmanualshub.com/

Model		UT20P (2.2L LPG) UT20P (2.2L DUAL)	UT25P (2.2L LPG) UT25P (2.2L DUAL)	UT30P (2.2L LPG) UT30P (2.2L DUAL)	UT35P (2.2L LPG) UT35P (2.2L DUAL)
Overall dimension	Long (mm)	3600	3675	3820	3870
	Width (mm)	1155	1155	1225	1225
	High (mm)	2140	2140	2170	2170
Service weight (kg)		3440	3765	4255	4555
Tire (F/R)		7.00-12-12PR 6.00-9-10PR	7.00-12-12PR 6.00-9-10PR	28×9-15-12PR 6.50-10-10PR	28×9-15-12PR 6.50-10-10PR
Voltage/Capacity (V/A.h)		12/60	12/60	12/60	12/60
No-load braking distance(M)		≤6	≤6	≤6	≤6
Engine	Type	MAZDA 2.2L			
	Rated capacity	37kW / 2700r/min			
	Max torque	135N·m / 1900 r/min			

https://www.forkliftpdfmanuals.com/

https://truckmanualshub.com/

Model	UT20P (4TNE92)	UT25P (4TNE92)
Rated capacity (kg)	2000	2500
Load center (mm)	500	500
Max. lifting height (mm)	3000	3000
Free lifting height(mm)	140	140
Max lifting speed(mm/s)	530	535
Tilting angle(deg)	6/12	6/12
Max traveling speed(km/h)	20	20
Max grade ability(%)	20	15
Min turning radius(mm)	2260	2320
Ground clearance(mm)	105	105

https://www.forkliftpdfmanuals.com/

https://truckmanualshub.com/

Model		UT20P (4TNE92)	UT25P (4TNE92)
Overall dimension	Long (mm)	3600	3675
	Width (mm)	1155	1155
	High (mm)	2140	2140
Service weight (kg)		3440	3765
Tire (F/R)		7.00-12-12PR 6.00-9-10PR	28X9-15-12PR 6.50-10-10PR
Voltage/Capacity (V/A.h)		12/90	12/90
No-load braking distance(M)		≤6	≤6
Engine	Type	**4TNE92-HRJ（YANMAR)**	
	Rated capacity	32.8 kW/2450r/min	
	Max torque	149.4N·m/1600 r/min	
	Displacement	2.659L	

https://www.forkliftpdfmanuals.com/

https://truckmanualshub.com/

Model	UT30P (4TNE98)	UT35P (4TNE98)
Rated capacity (kg)	3000	3500
Load center (mm)	500	500
Max. lifting height (mm)	3000	3000
Free lifting height(mm)	155	155
Max lifting speed(mm/s)	460	350
Tilting angle(deg)	6/12	6/12
Max traveling speed(km/h)	18	18
Max grade ability(%)	20	20
Min turning radius(mm)	2480	2520
Ground clearance(mm)	130	130

https://www.forkliftpdfmanuals.com/

https://truckmanualshub.com/

Model		UT30P (4TNE98)	UT35P (4TNE98)
Overall dimension	Long (mm)	3820	3870
	Width (mm)	1225	1225
	High (mm)	2170	2170
Service weight (kg)		4280	4555
Tire (F/R)		28×9-15-12PR 6.50-10-10PR	28×9-15-12PR 6.50-10-10PR
Voltage/Capacity (V/A.h)		12/90	12/90
No-load braking distance(M)		≤6	≤6
Engine	Type	**4TNE98-BQFLC（YANMAR)**	
	Rated capacity	42.1 Kw / 2300r/min	
	Max torque	186N·m / 1700 r/min	
	Displacement	3.319L	

https://www.forkliftpdfmanuals.com/

https://truckmanualshub.com/

Model	UT25C (2.4L LPG)	UT30C (2.4L LPG)
Rated capacity (kg)	2500	3000
Load center (mm)	500	500
Max. lifting height (mm)	3000	3000
Free lifting height(mm)	130	135
Max lifting speed(mm/s)	600	510
Tilting angle(°)	5/8	5/8
Max traveling speed(km/h)	20	19
Max grade ability(%)	20	20
Min turning radius(mm)	2020	2200
Ground clearance(mm)	83.5	80

https://www.forkliftpdfmanuals.com/

https://truckmanualshub.com/

Model		UT25C (2.4L LPG)	UT30C (2.4L LPG)
Overall dimension	Long (mm) To face of forks	2380	2470
	Width (mm)	1078	1123
	High (mm)	2135	2115
Service weight (kg)		3490	3815
Tire (F/R)		21X7X15/2 16X6X10.5/2	21X7X15/2 16X6X10.5/2
Voltage/Capacity (V/A.h)		12/45	12/45
No-load braking distance(M)		≤6	≤6
Engine	Type	**PSI 2.4L**	
	Rated capacity	55kW, 2800r/min	
	Max torque	179N·m, 2000 r/min	

https://www.forkliftpdfmanuals.com/

https://truckmanualshub.com/

Model	UT20P (2.4L LPG) UT20P (2.4L DUAL)	UT25P (2.4L LPG) UT25P (2.4L DUAL)	UT30P (2.4L LPG) UT30P (2.4L DUAL)	UT35P (2.4L LPG) UT35P (2.4L DUAL)
Rated capacity (kg)	2000	2500	3000	3500
Load center (mm)	500	500	500	500
Max. lifting height (mm)	3000	3000	3000	3000
Free lifting height(mm)	140	140	155	155
Max lifting speed(mm/s)	560	560	460	390
Tilting angle(°)	6/12	6/12	6/12	6/12
Max traveling speed(km/h)	21	21	19	19
Max grade ability(%)	20	20	20	18
Min turning radius(mm)	2260	2235	2480	2520
Ground clearance(mm)	105	105	130	130

https://www.forkliftpdfmanuals.com/

https://truckmanualshub.com/

Model		UT20P (2.4L LPG) UT20P (2.4L DUAL)	UT25P (2.4L LPG) UT25P (2.4L DUAL)	UT30P (2.4L LPG) UT30P (2.4L DUAL)	UT35P (2.4L LPG) UT35P (2.4L DUAL)
Overall dimension	Long (mm)	3600	3675	3820	3870
	Width (mm)	1155	1155	1225	1225
	High (mm)	2140	2140	2170	2170
Service weight (kg)		3440	3765	4255	4555
Tire (F/R)		7.00-12-12PR/2 6.00-9-10PR/2	7.00-12-12PR/2 6.00-9-10PR/2	28X9-15-12PR/2 6.50-10-10PR/2	28X9-15-12PR/2 6.50-10-10PR/2
Voltage/Capacity (V/A.h)		12/45	12/45	12/45	12/45
No-load braking distance(M)		≤6	≤6	≤6	≤6
Engine	Type	PSI 2.4L			
	Rated capacity	55kW / 2800r/min			
	Max torque	179N·m / 2000 r/min			
	Displacement	2.4L			

https://www.forkliftpdfmanuals.com/

13. Operation, Disassembly and Installation of Cab (Pneumatic)

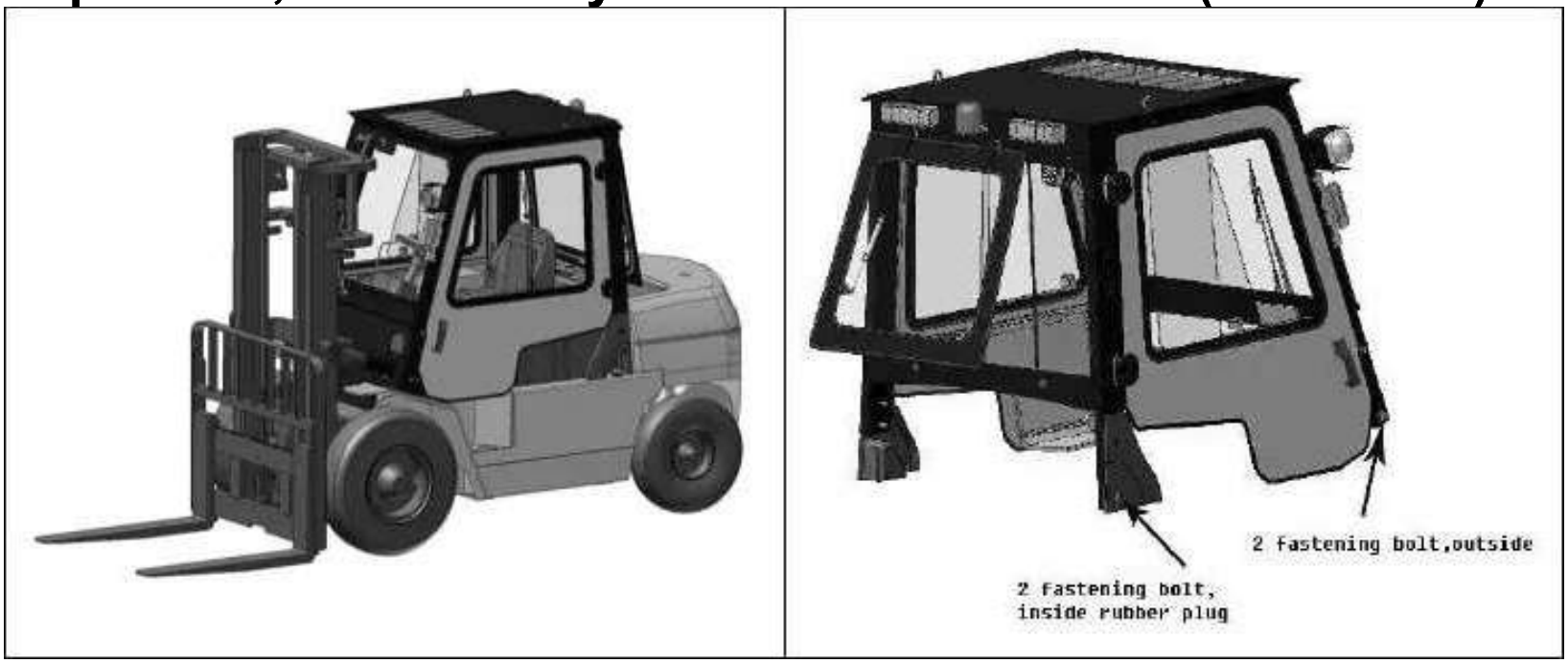

https://truckmanualshub.com/

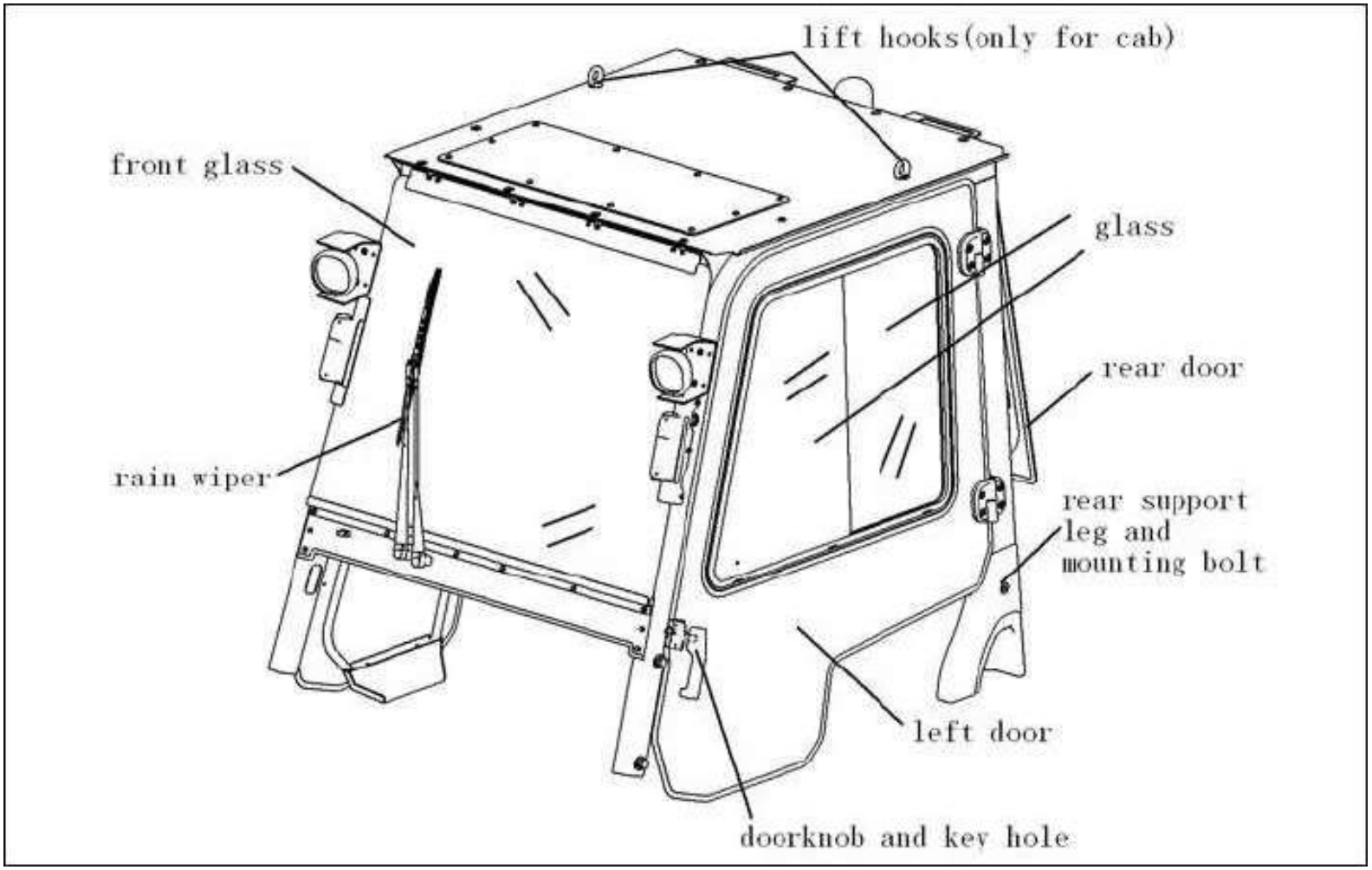

https://www.forkliftpdfmanuals.com/

https://truckmanualshub.com/

The operation of cab:

（1）Open left door with key, enter into cab.
（2）Close door, make sure left and right doors are closed before beginning work.
（3）The glass of left and right door can be moved by draw button on the glass.
（4）The rear door can be opened by loosening lock buckle.

Disassembling cab:

（1）Stop the truck on solid and smooth level ground; close switch , pull down hand brake.
（2）Remove 4 bolts from left front and right front legs. For high position exhaust, the fastening bolts should be removed
（3）Pull out 4 rubber plugs from left rear and right rear legs, remove 4 bolts from left rear and right rear legs.
（4）Using a crane, lift the cab slightly.
（5）Disconnect wiring at switches for fan, wiper, alarm, lights etc. Place any trailing wires inside cab support legs.
（6）Put down cab slowly and lightly, avoid crushing wires.

Installing cab:

The installation procedure is the reverse of the removal procedure. But remove the bolts which connect head frame and support legs, after fastening support legs and truck body, then fasten connected bolts connected head frame and support legs, fasten torque of bolts connected support legs and truck body: T=137-167 N·m. bolts for connecting head frame and support legs: T=110-140 N·m

https://www.forkliftpdfmanuals.com/

14. Operator Presence Sensing System(required in most markets)

DESCRIPTION OF OPERATOR PRESENCE SENSING (OPS) SYSTEM

The Operator Presence Sensing (OPS) System is available in certain marketing areas to disable traction and hydraulic functions if the operator is not in the proper operating position. If the operator is not sitting upright in the center of the seat with their back fully against the backrest, the system will interrupt travelling and hydraulic functions. If the operator leaves the seat without properly parking the truck, the system will also be engaged.

Starting Protection:

The operator must sit in the seat properly with the direction control lever in neutral before the engine will start. If the truck is equipped with seat belt protection, the operator must first sit in the seat, then fasten the seat belt before the truck will be able to start.

Forward and Reverse Protection:

a. **While the forklift is started**, the park brake light will be on and an alarm will sound if the operator is in the seat properly with the park brake engaged when the direction control lever is put into forward or reverse. If the direction control lever is returned to the center position, the alarm will stop sounding.

b. **While the forklift is started**, the operator **must sit on the seat correctly** and put the direction control lever in forward or reverse before the forklift will travel. If the operator is not seated correctly and the direction control lever is put into forward or reverse, an alarm will sound and an OPS light will illuminate. If the direction control lever is returned to the center position, the alarm will stop sounding.

c. **While the forklift is started**, the operator **must remain on the seat** correctly with the direction control lever in forward or reverse for the forklift to continue travelling. If the operator leaves the seat for more than 3 seconds when the forklift is travelling forward or reverse, the transmission will switch to neutral, an alarm will sound, the OPS light will illuminate, and the neutral-position indicator light will flash to give the operator a reminder that the truck was shifted to neutral without the lever being in the center position. The alarm will continue to sound and the forklift will not travel until the operator returns to the seat correctly and moves the direction control lever to the center position. Once the alarm is reset, travel will resume when the direction control lever is moved into forward or reverse gear again.

https://www.forkliftpdfmanuals.com/

https://truckmanualshub.com/

Seat Belt Protection:

If the truck is equipped with the Operator Presence Sensing System with an interlock seat belt, disconnecting the seat belt buckle will have the same effect as leaving the seat, which is described in the sections above.

> **WARNING**
>
> If the OPS system is activated by the operator leaving the seat or disconnecting the seat belt while traveling on a slope, the truck may roll on the slope when the engine is disabled. To avoid this, the driver must remain seated with the seatbelt fastened.

Hydraulic Function Protection:

If the operator is not seated properly while the engine is running, the hydraulic functions (lift, lower, tilt, and auxiliary functions) will be disabled. If the operator returns to the seat properly, the hydraulic functions will begin working. If the driver leaves the seat for more than 3 seconds, the hydraulic functions will be disabled.

Park Brake Protection:

a. If the operator fails to sit on the seat properly while the forklift is running and the park brake is not engaged, the alarm will sound after 3 seconds and the OPS light will illuminate. Pulling up the parking brake or sitting on the seat correctly will cancel the alarm.

b. If the park brake is not engaged when the driver leaves the seat without the engine running but the key switch is on, the alarm will sound and the OPS light will illuminate. Engaging the parking brake or returning to the seat properly will turn off the OPS light, the parking brake light, and the alarm.

Abnormal Function:

In the event the OPS system exhibits any of the following symptoms, park the forklift immediately in a safe place and contact an authorized service technician.

a. The alarm keeps sounding when the park brake is applied.
b. The neutral indicator light flashes when the gear switch is in neutral.
c. The OPS light does not illuminate or the alarm does not sound 3 seconds after the operator leaves the seat or disconnects the seat belt.
d. The alarm keeps sounding or the OPS light stays illuminated after the operator returns to the seat properly.

Note: Seat switch, parking brake switch, buzzer, alarm lights, and other lights are powered by battery and turning on key.

https://www.forkliftpdfmanuals.com/

https://truckmanualshub.com/

1. Wire Harness End View and Pin Definition

A- 20 pin plug

11	12	13	14	15	16	17	18	19	210
111	112	113	114	115	116	117	118	119	220

B 8 pin plug

11	22	33	44
55	66	77	88

Pin	Function Definition
A1	Controller Power + (+12 V)
A2	Power Ground
A3	Power Ground
A4	Battery +
A5	Parking brake light outlet (high efficiency)
A6	Mast lifting and lowering output (high efficiency)
A7	High- and low-speed solenoid valve (high efficiency)
A8	Reverse solenoid valve (high efficiency)
A9	Forward solenoid valve (high efficiency)
A10	Output on (high efficiency)
A11	+12V reserved, for external connection to power supply of indicator light, not for connection to large current loading. (cancelled)
A12	Power Ground
A13	BATT+ reserved, for external connection to power supply of indicator light, not for connection to large current loading. (cancelled)
A14	Seat switch (high efficiency)

https://www.forkliftpdfmanuals.com/

https://truckmanualshub.com/

Pin	Function Definition
A15	Parking brake switch (high efficiency)
A16	High and low speed changeover switch Closing corresponds to high speed
A17	Reverse gear (high efficiency)
A18	Forward gear (high efficiency)
A19	Manual/automatic changeover switch Closing corresponds to high speed
A20	Forklift speed sensor
B1	R2 indicator (low efficiency)
B2	R1 indicator (low efficiency)
B3	Alarm (high efficiency)
B4	Alarm indication (high efficiency)
B5	Auto indication (low efficiency)
B6	F2 indicator (low efficiency)
B7	F1 indicator (low efficiency)
B8	N indicator (high efficiency)

Note: High efficiency means it is available provided there is voltage, and the low efficiency means it is available only when grounded (no-voltage).

https://www.forkliftpdfmanuals.com/

https://truckmanualshub.com/

2. Wiring

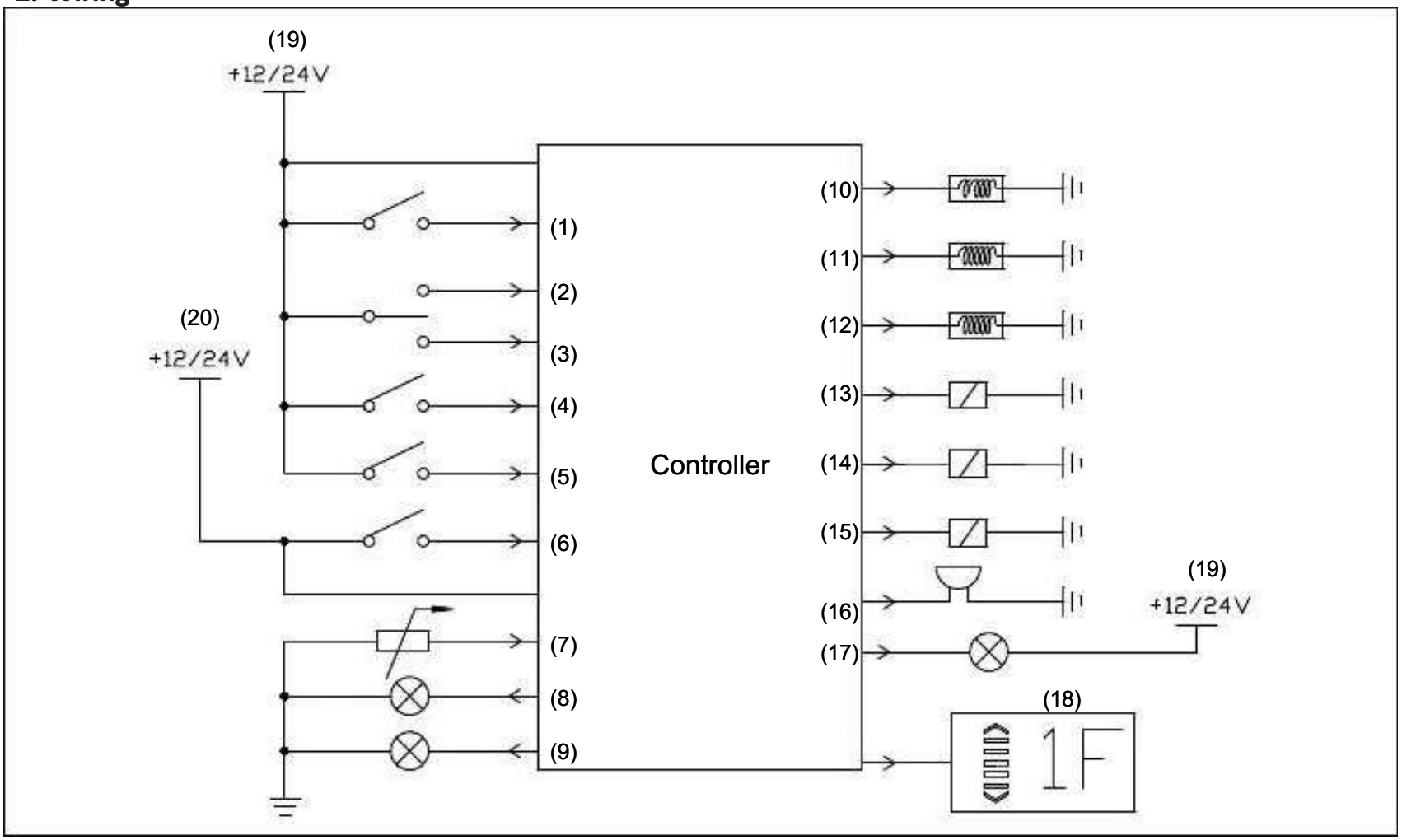

https://www.forkliftpdfmanuals.com/

https://truckmanualshub.com/

(1). Manual/Automatic	(2). Forward Gear	(3). Reverse Gear	(4). Seat Switch
(5). High and Low Speed Changeover Switch	(6). Parking Brake Switch	(7). Forklift Speed Sensor	(8). Mid-position Indicator
(9). Parking Brake Alarm Light	(10). Forward Solenoid Valve	(11). Reverse Solenoid Valve	(12). High- and Low-speed Solenoid Valve
(13). Starting Output	(14). Mast Lifting and Lowering Output	(15). Mast Forward and Backward Tilt Output	(16). Alarm Output
(17). Manual/Automatic Output	(18). Indication of Gear	(19). Key Switch Power Supply	(20). Battery Power Supply

https://www.forkliftpdfmanuals.com/

15. Operation and Notice about LPG Forklift

The LPG fuel system is composed primarily of a cylinder, a filter, a pressure-reducing regulator, and a mixer. The LPG passes from the cylinder through a combination valve, the high-pressure line, and the filter into the pressure reducer. The LPG then enters the mixer. After it is mixed with air according to a certain proportion, it enters the engine cylinders. This is where combustion occurs. This drives the operation of the forklift truck.

1. Filling and Replacing the LPG Cylinder (USE a sealant on all LPG connections having NPT threads.)

Exchange LPG cylinders (tanks) or fill LPG cylinders (tanks) per your local regulations. See dealer.

2. Using the Dual-Fuel Toggle Switch

1. Flip the dual fuel toggle switch to GAS, and the engine fuel becomes gasoline.
2. Flip the dual fuel toggle switch to LPG, and the engine fuel becomes liquefied petroleum gas.
3. When the dual fuel toggle switch is in the middle position, neither fuel is connected.

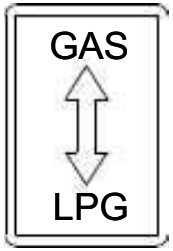

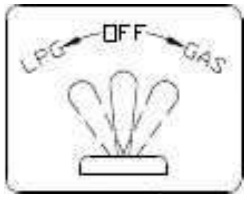

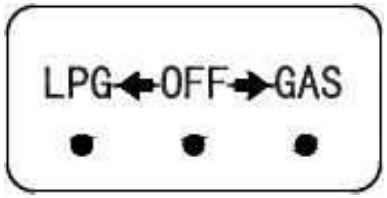

3. Starting the dual fuel engine

(1) Starting with Gasoline

Flip the dual fuel toggle switch to GAS. Wait a few seconds and turn the ignition key to start the motor and begin operating with gasoline.

(2) Starting with LPG

Flip the dual fuel toggle switch to LPG. Wait a few seconds and turn the ignition key to start the motor and begin operating with liquefied petroleum gas.

4. Changing Fuels While the Engine is Running and the Truck is Stationary

(1) To convert from LPG to gasoline, flip the dual fuel toggle switch directly from LPG to GAS. At this point the engine will stop running on LPG and begin running on gasoline.

(2) To convert from gasoline to LPG, flip the dual fuel toggle switch to the middle position. Wait a few seconds and once the engine speed slows, quickly move the dual fuel toggle switch to LPG.

5. Precautions

(1) If an LPG leak is discovered while the forklift truck is operating, immediately switch off the LPG switch and close the LPG tank outlet valve. Check each component and connection of the LPG system including fastener line connections for looseness, leaks, and other problems. USE a sealant on all LPG connections having NPT threads.

(2) Dual-fuel forklifts should use #93 gasoline or vehicle-use LPG as fuel. Otherwise, ignition timing accuracy will be affected, which will reduce power.

(3) If the forklift is stopped for more than 10 minutes, close LPG tank outlet valve.

(4) When the engine is running, it is best to maintain its coolant temperature between 70 °C and 85 °C.

6. Pressure-Reducing Regulator

The pressure-reducing regulator has two functions. The first is a pressure-reducing function. It lowers the pressure of the LPG coming from the cylinder to a pressure of one atmosphere. The second is evaporation. The liquid LPG is gasified by absorbing heat from the engine cooling system.

7. Mixer

The mixer, depending on the engine operating status, mixes vaporized LPG with air and delivers it to the engine, thus meeting engine power needs under various operating conditions.

https://truckmanualshub.com/

8. Cylinder

(1) Functions

Composed of a safety valve, an LPG filling port, an outflow quick connector, and corresponding accessories. The cylinder is the fuel storage system for LPG forklift truck. It is installed on the counterweight of the forklift truck. Its primary functions are:

a. Shut-Off Valves

Manual valves for controlling gas inflow and outflow lines.

b. Charge-Limiting Valve

After the cylinder has been filled to between 70% and 80% of capacity with LPG, this will automatically close.

c. LPG Level Display

Provides a direct visual display of the LPG level inside the cylinder.

d. Flow-Limiting Valve

Automatically closes when flow volume is too large (Ex: System damage or flow exceeds design value).

e. Pressure Relief Valve

When the pressure inside the cylinder exceeds a specified pressure, the pressure relief valve will automatically open and release pressure.

(2) Main Parameters

Operating temperature: -40℃ to +60℃
Operating pressure: 2.2MPa
Relief valve pressure: 2.5 MPa ±0.2MPa
Maximum fill capacity: 80% of cylinder

Note: USE a sealant on all LPG connections having NPT threads.

https://www.forkliftpdfmanuals.com/

(3) Cylinder Structure

1. Fixed Pin-Tank Locator	5. Outlet Shut-off Valve
2. LPG Level Gauge	6. Outlet Fitting-LPG Hose
3. Aux. Liquid Fill Valve	7. Safety Relief Valve
4. Fixed Liquid Level	

9. Steps for Replacing the LPG Cylinder

Precautions

1. When replacing the LPG cylinder, be sure to wear canvas gloves to protect from freeze injuries caused by leaking LPG.
2. When replacing the LPG cylinder, do so in a fully-ventilated, well-lit place. Smoking is strictly prohibited. Avoid all other open flames and sources of ignition.
3. When filling with LPG cylinder, lay the cylinder flat and set the LPG inflow shut-off valve to the top. Twist off the dust cover from the inflow shut-off valve. Insert the charging connector, and open the LPG inflow shut-off valve. When the LPG has been filled to about 80% of the tank's capacity, remove the filling head. When you fill to 80% of rated capacity, the charge-limiting device may automatically shut down. After filling has been terminated, remove the filling head. Twist the filling valve dust cover until tight. Tighten the inflow shut-off valve. **Check to make sure all components and parts are in good condition and undamaged.**
4. Use the safe operating procedures per your local regulations.

https://www.forkliftpdfmanuals.com/

https://truckmanualshub.com/

Cylinder Replacement Steel straps US only

1. Park the forklift per the procedure on page 40.	2. Close the LPG outlet shut-off valve, and loosen the outflow connector.
3. Locate the buckle belt and tensioner.	4. Grip the tensioner with your right hand. Pull out the lock catch with your index finger, middle finger, and ring finger.

https://www.forkliftpdfmanuals.com/

5. Keep holding the lock catch up, and push up tensioner device until it touches cylinder.	6. Keep the lock catch out and pull downward the whole tensioner device Then buckle belt is loosened from tensioner device.

Remove Cylinder and Charge 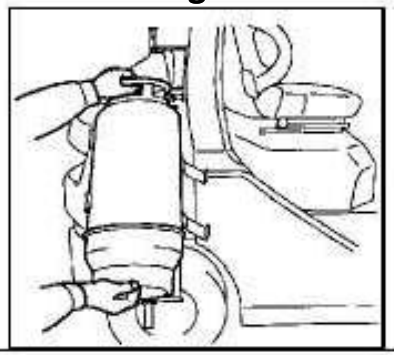	**Notice:** a) 1 # may use more than -20°C b) 2 # may use more than -10°C c) 3 # may use more than 0°C.

Caution: 1. Avoid banging cylinder against truck when removing.
2. Make sure the outlet shut-off valve is closed.
3. Only take the empty cylinder to authorized charging location.

https://www.forkliftpdfmanuals.com/

10. Method of Securing Cylinder Steel straps only (Fabric straps pictured)

1. Lift the cylinder onto the truck with the arrow pointing up, inserting the securing pin into the cylinder.	2. Grip the tensioner with the right hand, hold the buckle belt with the left hand, and align it with the open slot of the ratchet shaft.
3. Pass the buckle belt through the open slot of the ratchet shaft.	4. Pull down tightly on the buckle belt with your left hand. Pull out the lock catch with your index finger, middle finger, and ring finger. At the same time, push up until it bumps against the cylinder.

https://www.forkliftpdfmanuals.com/

5. Cause the buckle belt to become basically taut. Keep the lock catch pulled out; continue to crank down the tensioner with your right hand until it bumps against the cylinder.	6. Continue to pull tight with your left hand. Firmly grip the tensioner with your right hand, and let go of the lock catch. Turn the tensioner up and down a few times until its position cannot be shifted.
7. Pull down until it bumps against the cylinder.	8. Ensure the cylinder shut-off valve is closed. Reconnect the truck fuel hose to the outlet valve.

https://www.forkliftpdfmanuals.com/

https://truckmanualshub.com/

9. Slowly open the cylinder shut-off valve. DO NOT use until you have checked and found no leaks. If there is a leak, immediately close the tank shut-off valve, and twist open the forklift truck shut-off valve.

Caution :

After installing the cylinder and using the quick connector to mate the truck fuel line to the cylinder, slowly open the cylinder outlet shut-off valve. Check for LPG leaks by applying soap bubbles to all the line connectors. If a leak is discovered, DO NOT start the forklift truck work until after it is eliminated. After each use of the forklift truck, close the outlet shut-off valve.

Steel Strap Bracket (US Standard)	
	Opening Pull on the latch to open the straps. **Closing** To close, insert the tip of the latch in the strap hook and push towards the tank until secure. All other instructions are the same as the buckling straps.

https://www.forkliftpdfmanuals.com/

https://truckmanualshub.com/

11. Use precautions

(1) When preparing to fill the cylinder with LPG, first open the shut-off valve. After you have finished filling, close the inlet shut-off valve.

(2) When putting the tank on the forklift, the cylinder should be securely installed with the arrow on the end point up and both inlet and outlet shut-off valves closed. Connect the forklift truck input port to the cylinder outlet port. Tighten by turning. Open the outlet shut-off valve and DO NOT use until you have checked for leaks.

(3) Promptly check for leaks after each filling with LPG, and when it is put on the truck for use.

(4) Be careful to protect the inlet filling port from dust. After LPG filling is complete, promptly twist on the dust cover to protect the seal of the filling port one-way valve.

(5) The inlet relief pressure of the relief valve has already been set. Unauthorized changes to it are strictly forbidden.

(6) If there is an abnormal situation, then have it serviced by an authorized technician. DO NOT attempt to adjust, dismantle, or repair on your own. In addition, store abnormal cylinders separately.

(7) When the assembly is filled with LPG, either the volume method or the weight method may be used. If it is filled using the weight method, the cylinder needs to be placed standing upright. If the volume method is used, then lay the cylinder on its side, with the direction mark pointing up.

(8) When filling, transporting, storing, using, and testing cylinders, strictly observe the stipulations of the NFPA.

(9) The cylinder must be installed and removed gently. DO NOT let it collide with or be struck by other objects. Keep the cylinder assembled components in good condition. DO NOT detach, adjust, or replace components on your own.

(10) The cylinder may be re-filled with HD-5 liquefied petroleum gas. The maximum filling volume is not to exceed 80% of cylinder liquid volume.

(11) The cylinder must be filled at a filling station which has been issued a license for liquefied petroleum gas filling by a bureau of quality and technical supervision. DO NOT FILL ON YOUR OWN.

(12) When a new cylinder or a re-tested cylinder is first put into use, the filling unit must vacuum the cylinder or subject it to nitrogen gas replacement treatment.

https://www.forkliftpdfmanuals.com/

(13) Before the cylinder is re-installed, the cylinder should be positioned according to the vertical installation mark on the cylinder body. Lay it so that it is steady, close the outlet shut-off valve, and open the inlet shut-off valve. When filling, watch the LPG level indicator needle to see if it rises synchronously as it is filled. Stop filling immediately after the charge-limiting valve acts, and check the LPG level indicator needle to see if it is at the normal position. After filling ends, close the inlet shut-off valve.

(14) Before the cylinder is used, check for leaks or other abnormalities. It may not be used with faults.

(15) If an LPG leak is discovered while the forklift truck is operating, immediately switch off the LPG switch, and close the outlet valve. Check each unit of the device and fastener line connections for looseness and leaks, and handle problems promptly.

(16) If the forklift is stopped for more than 10 minutes, close the outlet valve.

(17) The cylinder should not be left out in the sun. Keep it away from heat sources and open flame. Absolutely DO NOT heat the cylinder with a heat source whose temperature is above 40 °C.

(18) DO NOT use up all the gas in the cylinder; leave residual gas equal to at least 0.5% of the specified fill quantity.

(19) Absolutely DO NOT alter the embossed and color marks on the cylinder.

(20) In accordance with established testing dates, the cylinder must be delivered for periodic inspection to a testing facility that is qualified as a pressure container safety supervision organization once every five years.

(21) While operating the forklift truck, observe at all times changes in the cylinder gas volume. If the gas is being used up in a way that does not match operation time, stop the truck to check for gas leaks. If a leak is discovered, then immediately turn off the power source and close all valves. Promptly take the appropriate measures.

(22) As much as possible, the forklift truck should be parked in a shady and well-ventilated area. Close the cylinder valves, and absolutely DO NOT allow the cylinder to remain exposed to sunlight.

(23) When the forklift truck enters a storage facility, turn off the power source and close all valves. The truck should have good ventilation conditions and be subject to fire-fighting measures.

(24) Absolutely DO NOT repair liquefied petroleum gas cylinders, valves, or lines while the truck is in storage or a parking lot. The operator is strictly prohibited from smoking while on the truck.

https://www.forkliftpdfmanuals.com/

https://truckmanualshub.com/

Service & maintenance

（1）This truck has undergone pressure trials and performance testing before leaving factory. If there is performance failure, strictly forbid repairing without permission.

（2）Close the valves on the LPG cylinder before disassembly and maintenance of the LPG device.

（3）Suitably adjust the measure valve, for LPG consumption varies seasonally.

（4）Check and clean often the air cleaner and the LPG filter, replace it with a new one in time if it is damaged.

（5）After finishing the LPG forklift debugging and one day well run (or a full container of LPG is used up), you should adjust the LPG vaporizer again to ensure proper ratio of fuel to air.

（6）Check the electric system every three months if any switch connection-peg is oxidized or rusted, and replace it in time.

（7）Take routine care for the whole LPG fuel system every year working, that is, clean the vaporizer, check airproof capacity of each tie-in in the high pressurized pipes and the low pressurized pipes.

Note: USE a sealant on all LPG connections having NPT threads.

https://www.forkliftpdfmanuals.com/

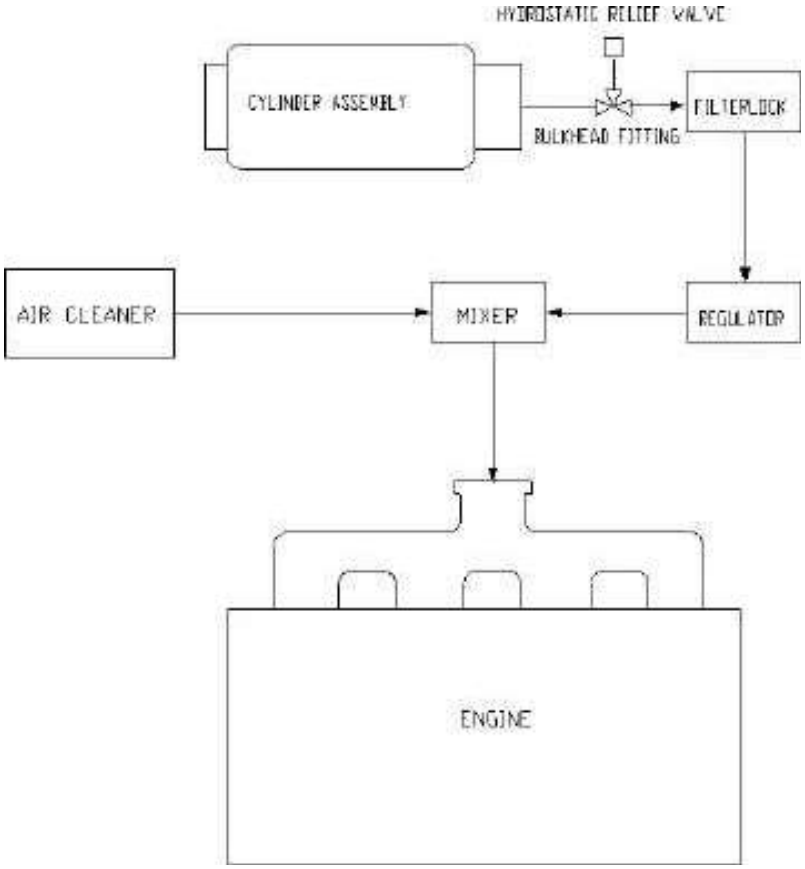

IMPCO Single Fuel System

https://www.forkliftpdfmanuals.com/

16. Operational Method of Lead Acid Battery

Lead acid battery and its application

1. Lead acid battery and its application

Lead acid battery is used for power start engine, and it can be for voltage regulation and overload generator substitute power, it has following strengths: low internal resistance, stable end voltage, large support current, low water cost, huge capacity, nice starting performance at low temperature, light pole corrosion, light mass, low fault rate, convenient maintenance. The Maintenance-free batteries are all sealed besides 2 vent holes (for overflowing a little air from battery) at the side of Maintenance-free battery. Low-maintenance lead-acid batteries plus liquid left in the battery cover mouth.

2. Storage and maintenance

2.1. Storage

The place for storing battery should be clean, dry, airy, and the battery should be charged every 3 months.

2.2. Maintenance

● Make sure there is no terminal corrosion, link part looseness, outer crack and fastening looseness on the battery.

● If the truck parks over 30 days, in order to keep the battery in normal charging technique condition, you should do the following:

2.3. The battery Check and maintenance

Maintenance-free battery. Check

The indicator of the electric eye will be green when the capacity is normal, density of electrolyte reaches the standard; it will be white when capacity is not enough, density of electrolyte does not reach the standard; it will be red when the electrolyte is acute shortage, the shell should be carefully examined whether there is rupture, leakage or battery failure.

The indicator of battery see particularly the prompt of the battery label.

1：Green：Sufficiently charged.
2：White：Insufficiently charged.
3：Red：Replace battery.

Maintenance-free battery, maintenance

1) Insure the green status visual in inner indicator;

2) Disconnecting negative earth wire to avoid discharging by additional current release;
3) Keep the battery enarged completely;
4) Make a general schedule, charge every 30-45 days if truck is not used during this period;
5) Check battery when the green status of indicator at battery are invisible, then charge or replace battery;

Low-Maintenance battery, Check

As the forklift is used in a high temperature ambient, and the battery easily consumes water, you should do pay attention to the liquid level when using the forklift. There is an aperture for adding liquid in the cover of the battery. Please add enough water up to the UPPER LEVEL when the liquid level is below the LOWER LEVEL and be sure the water is not so much that can spill out to erode your forklift.

When lacking of the electrolyte, please check whether the surface is damaged or leaky, or the battery is conking out.

The indicator of the electric eye will be green when the capacity is normal, density of electrolyte reaches the standard; it will be white when capacity is not enough, density of electrolyte does not reach the standard; it will be red when the electrolyte is acute shortage, the shell should be carefully examined whether there is rupture, leakage or battery failure.

The indicator of battery see particularly the prompt of the battery label.

https://www.forkliftpdfmanuals.com/

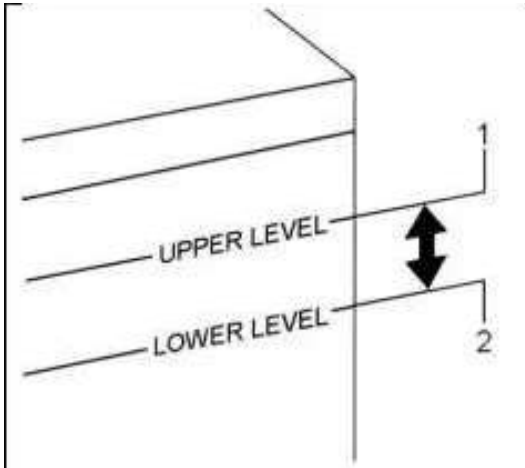

Check and make sure the electrolyte is between "UPPER LEVEL" and "LOWER LEVEL"

1："UPPER LEVEL"

2："LOWER LEVEL"

If the electrolyte is or lower than “Lower Level”, please add distilled water

Low-Maintenance battery, maintenance

1) Ensure that the battery electrolyte fluid level in the UPPER LEVEL.
2) Disconnecting negative earth wire to avoid discharging by additional current release;
3) Keep the battery charge completely;
4) Make a general schedule, charge every 30-45 days if truck is not used during this period;
5) When the battery electrolyte level is lower than LOWER LEVEL, please add distilled water to UPPER LEVEL, install the vent-plug to original place and fix it.

Notice:

Avoid overfill when adding distilled water. During battery recharging, spilled water may cause corrosion.

https://www.forkliftpdfmanuals.com/

https://truckmanualshub.com/

2.4. Before recharging

When battery is recharging, the generated hydrogen is flammable and explosive gas, so pay attention to the following item before operation:

- If charge to the battery still installed on the truck, one must disconnect ground cable.
- When connecting and disconnect battery charger cable, make sure charger power is off.

⚠ Notice:

- Safe place for battery charging should be at open ground. Never charge in bad ventilated garage or closed indoor.
- Never charge the battery when the engine is working. Make sure close all enclosure.

https://www.forkliftpdfmanuals.com/

https://truckmanualshub.com/

3. Notice for usage

Battery can produce explosive gas, electrolyte has corrosive, and the current can burn skin from battery producing. At the battery near or in its work, to comply with the following cautions：

- When working near battery, one must wear safety inspection.
- Never let tools contact battery terminal cause spark.
- Never expose the battery in open fire or spark.
- When battery connects electric equipment, make sure the electric equipment is correctly connected with the battery positive and negative to avoid damage of electric equipment or battery.
- Never cover electric things on the battery to avoid battery short cut.
- To avoid electrolyte contact eyes, skin or clothes.
- Never let the children close the battery.

Emergency measure to electrolyte

- If the electrolyte spilled eyes
- Please wash your eyes at least for 15 minutes and seek medical advice at once. If possible, use wet sponge or cloth clean eye on the way to hospital.
- If the electrolyte spilled skin
- Wash this part thoroughly. If you have burn pain, please seek medical advice at once.
- If the electrolyte spilled clothes

It may permeate clothes and contact skin. You must take off the clothes at once and do the above measure is necessary.

https://www.forkliftpdfmanuals.com/

https://truckmanualshub.com/

17. Use Installation and Safety Rules of Attachment

The attachment is in accordance to International standard ISO2328《Hook-on type fork arms and carriages - mounting dimensions》, such as clamp, rotator, paper roll clamp, carrying ram, side-shifter etc.

Attachment Use

（1）Understand the contents listed on the nameplate of the attachment, read the instruction manual before operating attachment.

(Especially the manual from attachment company) Before operating the attachment, personnel should be properly trained and qualified.

（2）The Basic capability and operating methods of attachment should be understood, especially the admit load, lift height, size of cargo and adapt range of attachment.

（3）When operating the multi-functional attachment, such as with side-shifter, clamp or rotator, only operate one function at a time.

（4）DO NOT move a truck with attachment when load is in a high position. If the size of cargo is too large, DO NOT move the truck. When transporting cargo, ensure ground clearance between the bottom of cargo and ground is less than 300mm and the mast is inclined back.

（5）The weight of cargo shouldn't exceed the combined limit of the carrying capacity of forklift and attachment. It is not allowed to have a partial load at high position. It is a short time work for attachment with side-shifter. Partial load is around 100mm (Above 5 ton (including 5 ton), the side-shifter is movable within 300mm.

（6）In the range of the projection forth 2m of the lower of attachment and cargo, prohibit stand to avoid the suddenness except the driver position under overhead.

（7）DO NOT apply emergency brake while moving. Travel slowly with load.

（8）Prohibit outside force when attachment working.

（9）DO NOT operate attachment beyond normal parameters.

（10）When the attachment malfunctions, prohibit use without check.

https://www.forkliftpdfmanuals.com/

https://truckmanualshub.com/

Check and Maintenance:

（1）Check the clearance of carriage beam and below catch of attachment according to the attachment manual.
（2）Check the rise catch is right on the flute of fork carriage.
（3）Use the auto currency lithic-grease per 500 hours to bearing surface.
（4）Check mounting hardware
（5）Check the tie-in of hydraulic pressure loop, if tube is damaged. Prohibit use until after repair.
（6）Check the operation of attachment and replace any damaged components
（7）Check each attachment operation is functioning correctly. If not, check the hydraulic pressure loop, find out the broken part, replace or repair part or whole loop part.

Attachment Assembly

Caution:

·Any change to safety or capability of attachment is strictly prohibited

Actual load capacity should be the least of rated load capacity, attachment load capacity, combined load capacity of truck and attachment, combined load capacity of truck. Generally speaking, the combined load capacity of truck is the least. Attachment load capacity may depend on attachment pressure.

·Check assembly of attachment to ensure no movement on carriage

·After hang attachment, embed the rise catch block to the gap of top beam. Ensure the center line of the attachment offset from the center line of the truck is less than 50mm. Otherwise it will affect the lateral stability of the forklift

·To attachments with rotating functions, such as paper roll clamp, bale clamp, multi-purpose clamp, and drum clamp, it needs to weld chock block in the joint of carriage beam and attachment to prevent movement from side to side in the operation.

Assemble the lower attachment mounting to ensure correct clearance with carriage.

https://www.forkliftpdfmanuals.com/

https://truckmanualshub.com/

18. Related Safety Instruction and Standard

	Model	The sound pressure level at operator position dB(A)	Sound power level dB (A)
The noise level in the operator compartment is a value for sound pressure and the radiated noise is a value of sound power. Noise emission according to EN12053	UT20P (4TNE92)	88.1	103.1
	UT25P (4TNE92)	87.4	103.0
	UT30P (4TNE98)	88.7	102
	UT35P (4TNE98)	88.8	102
	UT20P (PSI 2.4L LPG) UT20P (PSI 2.4L DUAL)	83	103
	UT25P (PSI 2.4L LPG) UT25P (PSI 2.4L DUAL)	83	103
	UT30P (PSI 2.4L LPG) UT30P (PSI 2.4L DUAL)	83	103
	UT35P (PSI 2.4L LPG) UT35P (PSI 2.4L DUAL)	83	103

- Vibration parameters in accordance with ISO5349-2:2001, EN13059:2002, uncertainly, K = 0.2 m/s^2
- Electromagnetism compatible is measured in accordance with EN12895:2000, and the result meets the requirement of 2004/108/EEC.
- Engine emission is in accordance with standard: 97/68/EC and 2005/88/EC.

https://www.forkliftpdfmanuals.com/

https://truckmanualshub.com/

Maintenance Record

Date	Item of Maintenance	Maintenance Personnel

https://www.forkliftpdfmanuals.com/

https://truckmanualshub.com/

WARNING

California Proposition 65- This Product contains and/or emits chemicals known to the State of California to cause cancer, birth defects, or other reproductive harm.

UTILEV TECHNICAL PUBLICATIONS

“UTILEV is a registered trademark. THE UTILITY LIFT TRUCK and UTILITY YOU CAN TRUST are trademarks in the United States and certain other jurisdictions.

P/N 76001648 **10/2015 (02/2015)**

https://www.forkliftpdfmanuals.com/