https://truckmanualshub.com/

An Oshkosh Corporation Company

Operation and Safety Manual

Original Instructions, keep this manual with the machine at all times.

Model
3394RT
4394RT
S/N-0200239053 to Present

ANSI

P/N - 3121641
March 2, 2016

Downloaded from www.Manualslib.com manuals search engine

https://truckmanualshub.com/

Downloaded from www.Manualslib.com manuals search engine

https://truckmanualshub.com/

FOREWORD

This manual is a very important tool! Keep it with the machine at all times.

The purpose of this manual is to provide owners, users, operators, lessors, and lessees with the precautions and operating procedures essential for the safe and proper machine operation for its intended purpose.

Due to continuous product improvements, JLG Industries, Inc. reserves the right to make specification changes without prior notification. Contact JLG Industries, Inc. for updated information.

Downloaded from www.Manualslib.com manuals search engine

https://truckmanualshub.com/

SAFETY ALERT SYMBOLS AND SAFETY SIGNAL WORDS

This is the Safety Alert Symbol. It is used to alert you to the potential personal injury hazards. Obey all safety messages that follow this symbol to avoid possible injury or death.

DANGER

INDICATES AN IMMINENTLY HAZARDOUS SITUATION. IF NOT AVOIDED, WILL RESULT IN SERIOUS INJURY OR DEATH. THIS DECAL WILL HAVE A RED BACKGROUND.

WARNING

INDICATES A POTENTIALITY HAZARDOUS SITUATION. IF NOT AVOIDED, COULD RESULT IN SERIOUS INJURY OR DEATH. THIS DECAL WILL HAVE AN ORANGE BACKGROUND.

CAUTION

INDICATES A POTENTIALITY HAZARDOUS SITUATION. IF NOT AVOIDED, MAY RESULT IN MINOR OR MODERATE INJURY. IT MAY ALSO ALERT AGAINST UNSAFE PRACTICES. THIS DECAL WILL HAVE A YELLOW BACKGROUND.

NOTICE

INDICATES INFORMATION OR A COMPANY POLICY THAT RELATES DIRECTLY OR INDIRECTLY TO THE SAFETY OF PERSONNEL OR PROTECTION OF PROPERTY.

Downloaded from www.Manualslib.com manuals search engine

https://truckmanualshub.com/

⚠ WARNING

THIS PRODUCT MUST COMPLY WITH ALL SAFETY RELATED BULLETINS. CONTACT JLG INDUSTRIES, INC. OR THE LOCAL AUTHORIZED JLG REPRESENTATIVE FOR INFORMATION REGARDING SAFETY-RELATED BULLETINS WHICH MAY HAVE BEEN ISSUED FOR THIS PRODUCT.

NOTICE

JLG INDUSTRIES, INC. SENDS SAFETY RELATED BULLETINS TO THE OWNER OF RECORD OF THIS MACHINE. CONTACT JLG INDUSTRIES, INC. TO ENSURE THAT THE CURRENT OWNER RECORDS ARE UPDATED AND ACCURATE.

NOTICE

JLG INDUSTRIES, INC. MUST BE NOTIFIED IMMEDIATELY IN ALL INSTANCES WHERE JLG PRODUCTS HAVE BEEN INVOLVED IN AN ACCIDENT INVOLVING BODILY INJURY OR DEATH OF PERSONNEL OR WHEN SUBSTANTIAL DAMAGE HAS OCCURRED TO PERSONAL PROPERTY OR THE JLG PRODUCT.

For:

- Accident Reporting
- Product Safety Publications
- Current Owner Updates
- Questions Regarding Product Safety
- Standards and Regulations Compliance Information
- Questions Regarding Special Product Applications
- Questions Regarding Product Modifications

Contact:

Product Safety and Reliability Department
JLG Industries, Inc.
13224 Fountainhead Plaza
Hagerstown, MD 21742

or Your Local JLG Office
(See addresses on manual rear cover)

In USA:

Toll Free: 877-JLG-SAFE (877-554-7233)

Outside USA:

Phone: 240-420-2661
E-mail: ProductSafety@JLG.com

Downloaded from www.Manualslib.com manuals search engine

https://truckmanualshub.com/

REVISION LOG

Original Issue. . . . . November 13, 2014
Manual Revised . . . . . January 5, 2015
Manual Revised . . . . . .March 2, 2016

Downloaded from www.Manualslib.com manuals search engine

https://truckmanualshub.com/

SECTION - PARAGRAPH, SUBJECT **PAGE**

SECTION - 1 - SAFETY PRECAUTIONS

1.1 GENERAL....1-1
1.2 PRE-OPERATION....1-2
Operator Training and Knowledge.... 1-2
Workplace Inspection.... 1-2
Machine Inspection.... 1-3
1.3 OPERATION....1-3
General.... 1-3
Trip and Fall Hazards.... 1-5
Electrocution Hazards.... 1-6
Tipping Hazards.... 1-7
Crushing and Collision Hazards.... 1-9
1.4 TOWING, LIFTING, AND HAULING....1-11
1.5 MAINTENANCE....1-11
Maintenance Hazards.... 1-11
Battery Hazards.... 1-12

SECTION - 2 - USER RESPONSIBILITIES, MACHINE PREPARATION AND INSPECTION

2.1 PERSONNEL TRAINING....2-1
Operator Training.... 2-1
Training Supervision.... 2-1
Operator Responsibility.... 2-1
2.2 PREPARATION, INSPECTION, AND MAINTENANCE....2-2
Pre-Start Inspection.... 2-4
General.... 2-6
Function Check.... 2-8
2.3 LOCKOUT CYLINDER TEST....2-9
2.4 DUAL FUEL SYSTEM (IF EQUIPPED).... 2-11

SECTION - 3 - MACHINE CONTROLS, INDICATORS AND OPERATION

3.1 GENERAL....3-1
3.2 DESCRIPTION....3-1
3.3 OPERATING CHARACTERISTICS AND LIMITATIONS....3-2
General.... 3-2
Placards.... 3-2
Capacities.... 3-2
Stability.... 3-2
3.4 GROUND CONTROLS AND INDICATORS....3-4
Ground Control Station.... 3-5
Manual Descent Control.... 3-7
3.5 PLATFORM CONTROL STATION....3-8
Platform Controls.... 3-9
Indicator Control Panel.... 3-12
3.6 ENGINE OPERATION.... 3-14
Platform/Ground Select Switch.... 3-14

Downloaded from www.Manualslib.com manuals search engine

https://truckmanualshub.com/

TABLE OF CONTENTS

SECTION - PARAGRAPH, SUBJECT **PAGE**

Emergency Stop Switch 3-14
Speed Switch 3-14
Starting Procedure 3-15
3.7 DUAL FUEL SYSTEM 3-16
3.8 OPERATING CHARACTERISTICS 3-16
Platform Loading 3-16
Traveling (Driving) 3-17
Traveling Forward 3-17
Traveling in Reverse 3-17
Traveling on Grade 3-17
Steering 3-17
Leveling Jacks 3-19
Auto Leveling 3-19
Manual Level Adjustment (Trim) 3-20
Raising and Lowering Platform 3-20
Raising 3-20
Lowering 3-21
Platform Extension 3-21
Power Deck 3-21
Auxiliary Power 3-22
Generator 3-22
3.9 PARKING AND STOWING 3-23
3.10 TIE DOWN/LIFT LUGS 3-23
Tie Down 3-23
Lifting 3-23

SECTION - PARAGRAPH, SUBJECT **PAGE**

3.11 TOWING 3-23

SECTION - 4 - EMERGENCY PROCEDURES

4.1 GENERAL 4-1
4.2 EMERGENCY TOWING PROCEDURES 4-1
4.3 EMERGENCY CONTROLS AND THEIR LOCATIONS 4-2
Emergency Stop Switch 4-2
Ground Control Station 4-2
Manual Descent 4-2
4.4 EMERGENCY OPERATION 4-3
Use of Ground Controls 4-3
Operator Unable to Control Machine 4-3
Platform Caught Overhead 4-3
Righting of Tipped Machine 4-3
Post-Incident Inspection 4-3
4.5 INCIDENT NOTIFICATION 4-4

SECTION - 5 - GENERAL SPECIFICATIONS AND OPERATOR MAINTENANCE

5.1 INTRODUCTION 5-1
5.2 SUPPLEMENTAL INFORMATION 5-1
5.3 OPERATING SPECIFICATIONS 5-2
Dimensional Data 5-3
Capacities 5-3
Tires 5-4

Downloaded from www.Manualslib.com manuals search engine

https://truckmanualshub.com/

SECTION - PARAGRAPH, SUBJECT **PAGE**

Engines 5-5
Critical Stability Weights 5-6
Lubrication 5-7
5.4 OPERATOR MAINTENANCE 5-12
Safety Prop 5-12
Fuel Tank 5-14
Drive Hub 5-14
Hydraulic Oil 5-15
Sliding Wear Pads 5-15
Oil Change w/Filter - Deutz 5-15
Oil Change w/Filter - Deutz D 2.9 L4 - T4F . . . 5-16
Oil Change w/Filter - GM. 5-16
Fuel Filter - Deutz 5-17
Fuel Filter - Deutz D 2.9 L4 - T4F. 5-17
Fuel Filter (Gasoline) - GM 5-17
Air Filter 5-18
Electronic Pressure Regulator (LPG only) 5-18
Fuel Filter (Propane) - GM. 5-18
5.5 DRAINING OIL BUILD UP FROM THE PROPANE REGULATOR. 5-19
5.6 PROPANE FUEL FILTER REPLACEMENT. 5-21
Removal 5-21
Installation 5-21

SECTION - PARAGRAPH, SUBJECT **PAGE**

5.7 PROPANE FUEL SYSTEM PRESSURE RELIEF 5-22
5.8 PROPANE FUEL SYSTEM LEAK TEST 5-23
5.9 TIRES AND WHEELS 5-23
Tire Damage. 5-23
Tire Replacement 5-24
Wheel Replacement 5-24
Wheel Installation 5-24
5.10 DECAL INSTALLATION 5-26

SECTION - 6 - INSPECTION AND REPAIR LOG

LIST OF FIGURES

2-1. Walk Around Inspection Diagram 2-5
2-2. Walk Around Inspection Points - Sheet 1 of 2 2-6
2-3. Walk Around Inspection Points - Sheet 2 of 2 2-7
3-1. Location of Machine Controls. (All Models) 3-3
3-2. Ground Control Station 3-4
3-3. Platform Control Station 3-8
3-4. Indicator Panel 3-13
3-5. Grade and Sideslope. 3-18
3-6. Lifting and Tie Down Chart (Sheet 1 of 2) 3-24
3-7. Lifting and Tie Down Chart (Sheet 2 of 2) 3-25
5-1. Engine Operating Temperature Specifications - Deutz - Sheet 1 of 2 5-8

Downloaded from www.Manualslib.com manuals search engine

https://truckmanualshub.com/

TABLE OF CONTENTS

SECTION - PARAGRAPH, SUBJECT	PAGE
5-2. Engine Operating Temperature Specifications - Deutz - Sheet 2 of 2	5-9
5-3. Engine Operating Temperature Specifications - GM - Sheet 1 of 2	5-10
5-4. Engine Operating Temperature Specifications - GM - Sheet 2 of 2	5-11
5-5. Operator Maintenance Components (All Models)	5-13
5-6. Filter Lock Assembly	5-21
5-7. Decal Location - Sheet 1 of 2 (ANSI)	5-26
5-8. Decal Location - Sheet 2 of 2 (ANSI)	5-27
5-9. Decal Installation - Sheet 1 of 2 (CE/AUS)	5-31
5-10. Decal Installation - Sheet 2 of 2 (CE/AUS)	5-32

LIST OF TABLES

SECTION - PARAGRAPH, SUBJECT	PAGE
1-1 Minimum Approach Distances (M.A.D.)	1-7
1-2 Beaufort Scale (For Reference Only)	1-8
2-1 Inspection and Maintenance Table	2-3
2-2 Maximum Cutout Height	2-8
2-3 Tilt Cutout Settings	2-8
3-1 Platform Capacities	3-16
5-1 Operating Specifications	5-2
5-2 Dimensional Data	5-3
5-3 Capacities	5-3
5-4 Tire Specifications	5-4
5-5 Deutz - D 2.9 L4 - T4F Engine Specifications	5-5
5-6 Deutz D 2011 L03 Engine Specifications	5-5
5-7 GM 3.0L Engine Specifications	5-6
5-8 Critical Stability Weights	5-6
5-9 Hydraulic Oil	5-7
5-10 Lubrication Specifications	5-7
5-11 Wheel Torque Chart	5-25
5-12 Decal Location Legend - ANSI	5-28
5-13 Decal Legend - CE/AUS	5-33
6-1 Inspection and Repair Log	6-1

Downloaded from www.Manualslib.com manuals search engine

https://truckmanualshub.com/

SECTION 1. SAFETY PRECAUTIONS

1.1 GENERAL

This section outlines the necessary precautions for proper and safe machine usage and maintenance. In order to promote proper machine usage, it is mandatory that a daily routine is established based on the content of this manual. A maintenance program, using the information provided in this manual and the Service and Maintenance Manual, must also be established by a qualified person and must be followed to ensure that the machine is safe to operate.

The owner/user/operator/lessor/lessee of the machine must not accept operating responsibility until this manual has been read, training is accomplished, and operation of the machine has been completed under the supervision of an experienced and qualified operator.

These sections contain the responsibilities of the owner, user, operator, lessor, and lessee concerning safety, training, inspection, maintenance, application, and operation.If there are any questions with regard to safety, training, inspection, maintenance, application, and operation, please contact JLG Industries, Inc. ("JLG").

WARNING

FAILURE TO COMPLY WITH THE SAFETY PRECAUTIONS LISTED IN THIS MANUAL COULD RESULT IN MACHINE DAMAGE, PROPERTY DAMAGE, PERSONAL INJURY OR DEATH.

Downloaded from www.Manualslib.com manuals search engine

https://truckmanualshub.com/

1.2 PRE-OPERATION

Operator Training and Knowledge

- The Operation and Safety Manual must be read and understood in its entirety before operating the machine. For clarification, questions, or additional information regarding any portions of this manual, contact JLG Industries, Inc.

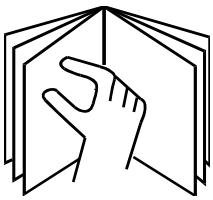

- An operator must not accept operating responsibilities until adequate training has been given by competent and authorized persons.
- Allow only those authorized and qualified personnel to operate the machine who have demonstrated that they understand the safe and proper operation and maintenance of the unit.
- Read, understand, and obey all DANGERS, WARNINGS, CAUTIONS, and operating instructions on the machine and in this manual.
- Ensure that the machine is to be used in a manner which is within the scope of its intended application as determined by JLG.
- All operating personnel must be familiar with the emergency controls and emergency operation of the machine as specified in this manual.
- Read, understand, and obey all applicable employer, local, and governmental regulations as they pertain to your utilization and application of the machine.

Workplace Inspection

- Precautions to avoid all hazards in the work area must be taken by the user before and during operation of the machine.
- Do not operate or raise the platform from a position on trucks, trailers, railway cars, floating vessels, scaffolds or other equipment unless the application is approved in writing by JLG.
- Before operation, check work area for overhead hazards such as electric lines, bridge cranes, and other potential overhead obstructions.
- Check floor surfaces for holes, bumps, drop-offs, obstructions, debris, concealed holes, and other potential hazards.

Downloaded from www.Manualslib.com manuals search engine

https://truckmanualshub.com/

- Check the work area for hazardous locations. Do not operate the machine in hazardous environments unless approved for that purpose by JLG.
- Ensure that the ground conditions are adequate to support the maximum tire load indicated on the tire load decals located on the chassis adjacent to each wheel.
- This machine can be operated in nominal ambient temperatures of 0° F to 104° F (-20° C to 40° C). Consult JLG to optimize operation outside of this temperature range.

Machine Inspection

- Do not operate this machine until the inspections and functional checks have been performed as specified in Section 2 of this manual.
- Do not operate this machine until it has been serviced and maintained according to the maintenance and inspection requirements as specified in the machine's Service and Maintenance Manual.
- Ensure all safety devices are operating properly. Modification of these devices is a safety violation.

⚠ WARNING

MODIFICATION OR ALTERATION OF AN AERIAL WORK PLATFORM SHALL BE MADE ONLY WITH PRIOR WRITTEN PERMISSION FROM THE MANUFACTURER.

- Do not operate any machine on which the safety or instruction placards or decals are missing or illegible.
- Check the machine for modifications to original components. Ensure that any modifications have been approved by JLG.
- Avoid accumulation of debris on platform deck. Keep mud, oil, grease, and other slippery substances from footwear and platform deck.

1.3 OPERATION

General

- Machine operation requires your full attention. Bring the machine to a full stop before using any device, i.e. cell phones, two-way radios, etc. that will distract your attention from safely operating the machine.
- Do not use the machine for any purpose other than positioning personnel, their tools, and equipment.
- Before operation, the user must be familiar with the machine capabilities and operating characteristics of all functions.
- Never operate a malfunctioning machine. If a malfunction occurs, shut down the machine. Remove the unit from service and notify the proper authorities.

Downloaded from www.Manualslib.com manuals search engine

https://truckmanualshub.com/

- Do not remove, modify, or disable any safety devices.
- Never slam a control switch or lever through neutral to an opposite direction. Always return switch to neutral and stop before moving the switch to the next function. Operate controls with slow and even pressure.
- Do not allow personnel to tamper with or operate the machine from the ground with personnel in the platform, except in an emergency.
- Do not carry materials directly on platform railing unless approved by JLG.
- When two or more persons are in the platform, the operator shall be responsible for all machine operations.
- Always ensure that power tools are properly stowed and never left hanging by their cord from the platform work area.
- Do not assist a stuck or disabled machine by pushing or pulling except by pulling at the chassis tie-down lugs.
- Fully lower platform and shut off all power before leaving machine.
- Remove all rings, watches, and jewelry when operating machine. Do not wear loose fitting clothing or long hair unrestrained which may become caught or entangled in equipment.
- Persons under the influence of drugs or alcohol or who are subject to seizures, dizziness or loss of physical control must not operate this machine.

Downloaded from www.Manualslib.com manuals search engine

https://truckmanualshub.com/

Trip and Fall Hazards

- Prior to operation, ensure all gates and rails are fastened and secured in their proper position.

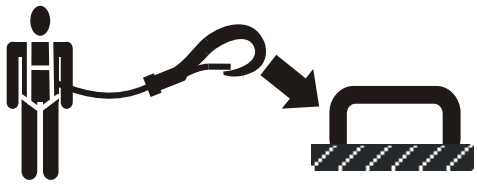

- JLG Industries, Inc. recommends that all persons in the platform wear a full body harness with a lanyard attached to an authorized lanyard anchorage point while operating this machine. For further information regarding fall protection requirements on JLG products, contact JLG Industries, Inc.
- Identify the designated lanyard anchorage point(s) at the platform and securely attach the lanyard. Attach only one (1) lanyard per lanyard anchorage point.
- Enter and exit only through gate area. Use extreme caution when entering or leaving platform. Ensure that the platform assembly is fully lowered. Face the machine when entering or leaving the platform. Always maintain “three point contact” with the machine, using two hands and one foot or two feet and one hand at all times during entry and exit.

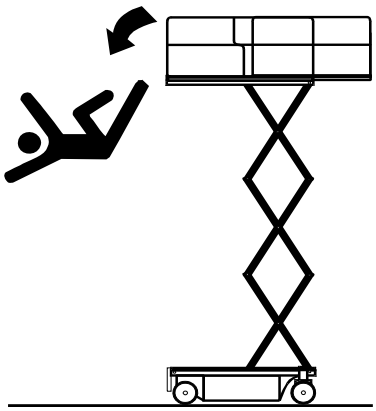

- Keep both feet firmly positioned on the platform floor at all times. Never position ladders, boxes, steps, planks, or similar items on unit to provide additional reach for any purpose.
- Never use the scissor arm assembly to gain access to or leave the platform.
- Keep oil, mud, and slippery substances cleaned from footwear and the platform floor.

Downloaded from www.Manualslib.com manuals search engine

https://truckmanualshub.com/

Electrocution Hazards

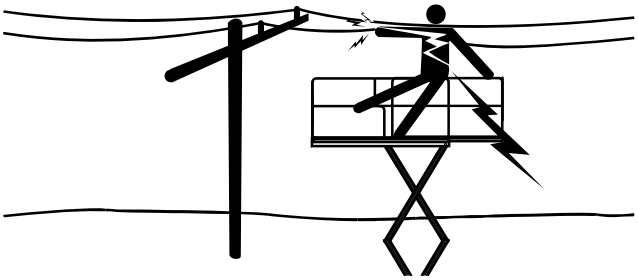

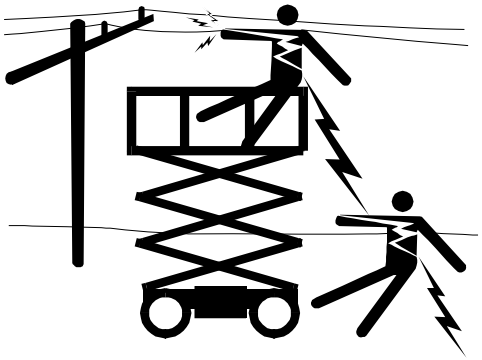

- This machine is not insulated and does not provide protection from contact or proximity to electrical current.
- Maintain distance from electrical lines, apparatus, or any energized (exposed or insulated) parts according to the Minimum Approach Distance (MAD) as shown in Table 1-1.
- Allow for machine movement and electrical line swaying.
- Maintain a clearance of at least 10 ft. (3m) between any part of the machine and its occupants, their tools, and their equipment from any electrical line or apparatus carrying up to 50,000 volts. One foot additional clearance is required for every additional 30,000 volts or less.
- The minimum approach distance may be reduced if insulating barriers are installed to prevent contact, and the barriers are rated for the voltage of the line being guarded. These barriers shall not be part of (or attached to) the machine. The minimum approach distance shall be reduced to a distance within the designed working dimensions of the insulating barrier. This determination shall be made by a qualified person in accordance with the employer, local, or governmental requirements for work practices near energized equipment.

Downloaded from www.Manualslib.com manuals search engine

https://truckmanualshub.com/

DANGER

DO NOT MANEUVER MACHINE OR PERSONNEL INSIDE PROHIBITED ZONE (MAD). ASSUME ALL ELECTRICAL PARTS AND WIRING ARE ENERGIZED UNLESS KNOWN OTHERWISE.

Table 1-1. Minimum Approach Distances (M.A.D.)

VOLTAGE RANGE (Phase to Phase)	MINIMUM APPROACH DISTANCE in Feet (Meters)
0 to 50 KV	10 (3)
Over 50KV to 200 KV	15 (5)
Over 200 KV to 350 KV	20 (6)
Over 350 KV to 500 KV	25 (8)
Over 500 KV to 750 KV	35 (11)
Over 750 KV to 1000 KV	45 (14)
NOTE: ***This requirement shall apply except where employer, local or governmental regulations are more stringent.***	

Tipping Hazards

- Ensure that the ground conditions are adequate to support the maximum tire load indicated on the tire load decals located on the chassis adjacent to each wheel. Do not travel on unsupported surfaces.
- The user must be familiar with the driving surface before driving. Do not exceed the allowable sideslope and grade while driving.
- Do not elevate platform or drive with platform elevated while on or near a sloping, uneven, or soft surface. Ensure machine is positioned on a firm, level and smooth surface before elevating platform or driving with the platform in the elevated position.
- Before driving on floors, bridges, trucks, and other surfaces, check allowable capacity of the surfaces.
- Never exceed the maximum work load as specified on the platform. Keep all loads within the confines of the platform, unless authorized by JLG.
- Keep the chassis of the machine a minimum of 2 ft. (0.6m) from holes, bumps, drop-offs, obstructions, debris, concealed holes, and other potential hazards at the ground level.
- Do not operate the machine when wind conditions exceed specifications shown in Section 6, Table 5-1 or as shown on the capacity placard on the platform billboard.

Downloaded from www.Manualslib.com manuals search engine

https://truckmanualshub.com/

WARNING

DO NOT OPERATE THE MACHINE WHEN WIND CONDITIONS EXCEED SPECIFICATIONS SHOWN IN SECTION 5, TABLE 5-2 OR AS SHOWN ON THE CAPACITY PLACARD ON THE PLATFORM BILLBOARD.

Table 1-2. Beaufort Scale (For Reference Only)

BEAUFORT NUMBER	WIND SPEED		DESCRIPTION	LAND CONDITIONS
	mph	m/s		
0	0	0-0.2	Calm	Calm. Smoke rises vertically.
1	1-3	0.3-1.5	Light air	Wind motion visible in smoke.
2	4-7	1.6-3.3	Light breeze	Wind felt on exposed skin. Leaves rustle.
3	8-12	3.4-5.4	Gentle breeze	Leaves and smaller twigs in constant motion.
4	13-18	5.5-7.9	Moderate breeze	Dust and loose paper raised. Small branches begin to move.
5	19-24	8.0-10.7	Fresh breeze	Smaller trees sway.
6	25-31	10.8-13.8	Strong breeze	Large branches in motion. Flags waving near horizontal. Umbrella use becomes difficult.
7	32-38	13.9-17.1	Near Gale/Moderate Gale	Whole trees in motion. Effort needed to walk against the wind.
8	39-46	17.2-20.7	Fresh Gale	Twigs broken from trees. Cars veer on road.
9	47-54	20.8-24.4	Strong Gale	Light structure damage.

Downloaded from www.Manualslib.com manuals search engine

https://truckmanualshub.com/

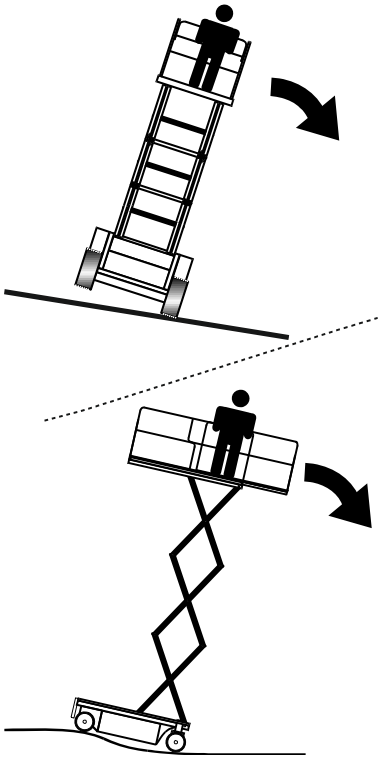

- Never attempt to use the machine as a crane. Do not tie-off machine to any adjacent structure. Never attach wire, cable, or any similar items to platform.
- Do not cover the platform sides or carry large surface-area items in the platform when operating outdoors. The addition of such items increases the exposed wind area of the machine.
- Do not increase the platform size with unauthorized deck extensions or attachments.
- If the scissor arm assembly or platform is caught so that one or more wheels are off the ground, all persons must be removed before attempting to free the machine. Use cranes, forklift trucks, or other appropriate equipment to stabilize machine and remove personnel.

Crushing and Collision Hazards

- Approved head gear must be worn by all operating and ground personnel.
- Keep hands and limbs out of the scissor arm assembly during operation and when elevated without safety prop engaged.
- Watch for obstructions around machine and overhead when driving. Check clearances above, on sides, and bottom of platform when lifting or lowering platform.

Downloaded from www.Manualslib.com manuals search engine

https://truckmanualshub.com/

- During operation, keep all body parts inside platform railing.

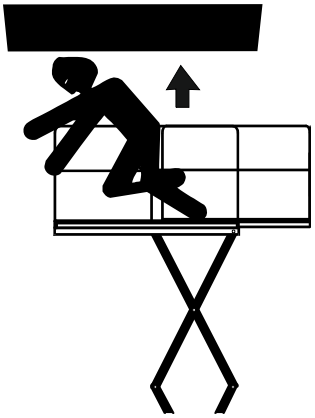

- Always post a lookout when driving in areas where vision is obstructed.
- Keep non-operating personnel at least 6 ft. (1.8m) away from machine during all operations.
- Under all travel conditions, the operator must limit travel speed according to conditions of ground surface, congestion, visibility, slope, location of personnel, and other factors.
- Be aware of stopping distances in all drive speeds. When driving in high speed, switch to low speed before stopping. Travel grades in low speed only.
- Do not use high speed drive in restricted or close quarters or when driving in reverse.
- Exercise extreme caution at all times to prevent obstacles from striking or interfering with operating controls and persons in the platform.
- Ensure that operators of other overhead and floor level machines are aware of the aerial work platform's presence. Disconnect power to overhead cranes. Barricade floor area if necessary.
- Do not operate over ground personnel. Warn personnel not to work, stand, or walk under a raised platform. Position barricades on floor as necessary.

Downloaded from www.Manualslib.com manuals search engine

https://truckmanualshub.com/

1.4 TOWING, LIFTING, AND HAULING

- Never allow personnel in platform while towing, lifting, or hauling.
- This machine should not be towed, except in the event of emergency, malfunction, power failure, or loading/unloading. Refer to emergency towing procedures.
- Ensure platform is fully retracted and completely empty of tools prior to towing, lifting or hauling.
- When lifting machine with a forklift, position forks only at designated areas of the machine. Lift with a forklift of adequate capacity.
- Refer to Section 3 for lifting information.

1.5 MAINTENANCE

This sub-section contains general safety precautions which must be observed during maintenance of this machine. Additional precautions to be observed during machine maintenance are inserted at the appropriate points in this manual and in the Service and Maintenance Manual. It is of utmost importance that maintenance personnel pay strict attention to these precautions to avoid possible injury to personnel or damage to the machine or property. A maintenance program must be established by a qualified person and must be followed to ensure that the machine is safe.

Maintenance Hazards

- Shut off power to all controls and ensure that all moving parts are secured from inadvertent motion prior to performing any adjustments or repairs.
- Never work under an elevated platform until it has been fully lowered to the full down position, if possible, or otherwise supported and restrained from movement with appropriate safety props, blocking, or overhead supports.
- DO NOT attempt to repair or tighten any hydraulic hoses or fittings while the machine is powered on or when the hydraulic system is under pressure.
- Always relieve hydraulic pressure from all hydraulic circuits before loosening or removing hydraulic components.
- DO NOT use your hand to check for leaks. Use a piece of cardboard or paper to search for leaks. Wear gloves to help protect hands from spraying fluid.

- Ensure replacement parts or components are identical or equivalent to original parts or components.

Downloaded from www.Manualslib.com manuals search engine

https://truckmanualshub.com/

- Never attempt to move heavy parts without the aid of a mechanical device. Do not allow heavy objects to rest in an unstable position. Ensure adequate support is provided when raising components of the machine.
- Use only approved non-flammable cleaning solvents.
- Do not replace items critical to stability, such as batteries or solid tires, with items of different weight or specification. Do not modify unit in any way to affect stability.
- Reference the Service and Maintenance Manual for the weights of critical stability items.

⚠ WARNING

MODIFICATION OR ALTERATION OF AN AERIAL WORK PLATFORM SHALL BE MADE ONLY WITH PRIOR WRITTEN PERMISSION FROM THE MANUFACTURER.

Battery Hazards

- Always disconnect batteries when servicing electrical components or when performing welding on the machine.
- Do not allow smoking, open flame, or sparks near battery during charging or servicing.
- Do not contact tools or other metal objects across the battery terminals.
- Always wear hand, eye, and face protection when servicing batteries. Ensure that battery acid does not come in contact with skin or clothing.

⚠ CAUTION

BATTERY FLUID IS HIGHLY CORROSIVE. AVOID CONTACT WITH SKIN AND CLOTHING AT ALL TIMES. IMMEDIATELY RINSE ANY CONTACTED AREA WITH CLEAN WATER AND SEEK MEDICAL ATTENTION.

- Charge batteries only in a well ventilated area.
- Avoid overfilling the battery fluid level. Add distilled water to batteries only after the batteries are fully charged.

Downloaded from www.Manualslib.com manuals search engine

https://truckmanualshub.com/

SECTION 2. USER RESPONSIBILITIES, MACHINE PREPARATION AND INSPECTION

2.1 PERSONNEL TRAINING

The aerial platform is a personnel handling device; so it is necessary that it be operated and maintained only by trained personnel.

Persons under the influence of drugs or alcohol or who are subject to seizures, dizziness or loss of physical control must not operate this machine.

Operator Training

Operator training must cover:

1. Use and limitations of the controls in the platform and at the ground, emergency controls and safety systems.
2. Control labels, instructions, and warnings on the machine.
3. Rules of the employer and government regulations.
4. Use of approved fall protection device.
5. Enough knowledge of the mechanical operation of the machine to recognize a malfunction or potential malfunction.
6. The safest means to operate the machine where overhead obstructions, other moving equipment, and obstacles, depressions, holes, dropoffs.
7. Means to avoid the hazards of unprotected electrical conductors.
8. Specific job requirements or machine application.

Training Supervision

Training must be done under the supervision of a qualified person in an open area free of obstructions until the trainee has developed the ability to safely control and operate the machine.

Operator Responsibility

The operator must be instructed that he/she has the responsibility and authority to shut down the machine in case of a malfunction or other unsafe condition of either the machine or the job site.

Downloaded from www.Manualslib.com manuals search engine

https://truckmanualshub.com/

2.2 PREPARATION, INSPECTION, AND MAINTENANCE

The following table covers the periodic machine inspections and maintenance recommended by JLG Industries, Inc. Consult local regulations for further requirements for aerial work platforms. The frequency of inspections and maintenance must be increased as necessary when the machine is used in a harsh or hostile environment, if the machine is used with increased frequency, or if the machine is used in a severe manner.

NOTICE

JLG INDUSTRIES, INC. RECOGNIZES A FACTORY-TRAINED SERVICE TECHNICIAN AS A PERSON WHO HAS SUCCESSFULLY COMPLETED THE JLG SERVICE TRAINING SCHOOL FOR THE SPECIFIC JLG PRODUCT MODEL.

Downloaded from www.Manualslib.com manuals search engine

https://truckmanualshub.com/

Table 2-1.Inspection and Maintenance Table

Type	Frequency	Primary Responsibility	Service Qualification	Reference
Pre-Start Inspection	Before using each day; or whenever there's an Operator change.	User or Operator	User or Operator	Operator and Safety Manual
Pre-Delivery Inspection (See Note)	Before each sale, lease, or rental delivery.	Owner, Dealer, or User	Qualified JLG Mechanic	Service and Maintenance Manual and applicable JLG inspection form
Frequent Inspection	In service for 3 months or 150 hours, whichever comes first; or Out of service for a period of more than 3 months; or Purchased used.	Owner, Dealer, or User	Qualified JLG Mechanic	Service and Maintenance Manual and applicable JLG inspection form
Annual Machine Inspection (See Note)	Annually, no later than 13 months from the date of prior inspection.	Owner, Dealer, or User	Factory Trained Service Technician (Recommended)	Service and Maintenance Manual and applicable JLG inspection form
Preventative Maintenance	At intervals as specified in the Service and Maintenance Manual.	Owner, Dealer, or User	Qualified JLG Mechanic	Service and Maintenance Manual
NOTE: *Inspection forms are available from JLG. Use the Service and Maintenance Manual to perform inspections.*				

Downloaded from www.Manualslib.com manuals search engine

https://truckmanualshub.com/

Pre-Start Inspection

The Pre-Start Inspection should include each of the following:

1. **Cleanliness –** Check all surfaces for leakage (oil, fuel, or battery fluid) or foreign objects. Report any leakage to the proper maintenance personnel.
2. **Structure -** Inspect the machine structure for dents, damage, weld or parent metal cracks or other discrepencies.

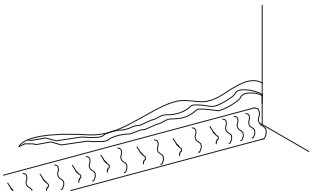

Parent Metal Crack

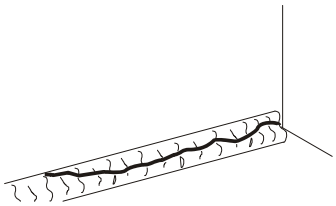

Weld Crack

3. **Decals and Placards** – Check all for cleanliness and legibility. Make sure none of the decals and placards are missing (refer to the Decal Installation in Section 3). Make sure all illegible decals and placards are cleaned or replaced.
4. **Operators and Safety Manuals** – Make sure a copy of the Operator and Safety Manual, AEM Safety Manual (ANSI markets only), and ANSI Manual of Responsibilities (ANSI markets only) is enclosed in the weather resistant storage container.
5. **"Walk-Around" Inspection** – Refer to Figure 2-1.
6. **Battery –** Charge as required.
7. **Fuel** (Combustion Engine Powered Machines) – Add the proper fuel as necessary.
8. **Hydraulic Oil** – Check the hydraulic oil level. Ensure hydraulic oil is added as required.
9. **Function Check** – Once the "Walk-Around" Inspection is complete, perform a functional check of all systems in an area free of overhead and ground level obstructions. Refer to Section 4 for more specific instructions.

⚠ WARNING

IF THE MACHINE DOES NOT OPERATE PROPERLY, TURN OFF THE MACHINE IMMEDIATELY! REPORT THE PROBLEM TO THE PROPER MAINTENANCE PERSONNEL. DO NOT OPERATE THE MACHINE UNTIL IT IS DECLARED SAFE FOR OPERATION.

Downloaded from www.Manualslib.com manuals search engine

https://truckmanualshub.com/

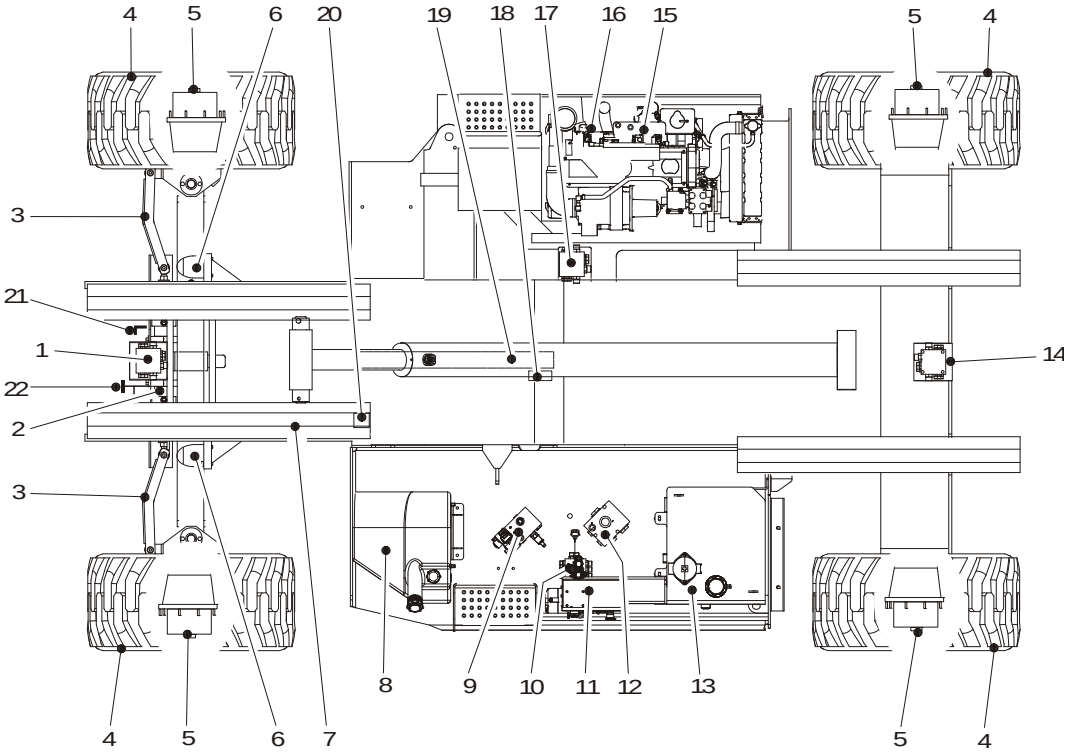

Figure 2-1. Walk Around Inspection Diagram

Downloaded from www.Manualslib.com manuals search engine

https://truckmanualshub.com/

General

Begin the "Walk-Around Inspection" at Item 1, as noted on the diagram.Continue to the right (counterclockwise viewed from top) checking each item in sequence for the conditions listed in the "Walk-Around Inspection Checklist".

WARNING

TO AVOID POSSIBLE INJURY, BE SURE MACHINE POWER IS "OFF" DURING "WALK-AROUND INSPECTION".

NOTICE

DO NOT OVERLOOK VISUAL INSPECTION OF CHASSIS UNDERSIDE. CHECKING THIS AREA OFTEN RESULTS IN DISCOVERY OF CONDITIONS WHICH COULD CAUSE EXTENSIVE MACHINE DAMAGE.

NOTE: *On each item, make sure there are no loose or missing parts, that they are securely fastened, and that no visible damage exists in addition to any other criteria mentioned.*

NOTE: *All wheel lugs are to be torqued at 170 ft lbs (240 Nm).*

1. Oscillating Header Valve (2WD only)(If applicable) - No unsupported wires or hoses; no damaged or broken wires.
2. Steer Cylinder - See Note.
3. Spindle, Tie Rod and Steer Linkage - See Note.
4. Wheels and Tires - Properly secured, no missing lug nuts. Refer to Section 6, Tires and Wheels. Inspect wheels for damage and corrosion.
5. Drive Hub - See Note.
6. Oscillating Axle, Oscillation Cylinder - See Note.
7. Scissor Arms, Centering LInk and Sliding Wear Pads - See Note.
8. Fuel Tank - See Note.
9. Main Control Valve - No unsupported wires or hoses; no damaged or broken wires.
10. Leveling Jack Valve (If equipped) - No unsupported wires or hoses; no damaged or broken wires.

Figure 2-2. Walk Around Inspection Points - Sheet 1 of 2

Downloaded from www.Manualslib.com manuals search engine

https://truckmanualshub.com/

11. Ground Controls - Placard secure and legible, control switches return to neutral position, emergency stop switch functions properly. Control markings legible.

12. Drive Valve (If applicable) - No unsupported wires or hoses; no damaged or broken wires.

13. Hydraulic Reservoir - Recommended hydraulic fluid level on level indicator on tank. Breather cap secure and working.

14. Header Valve (4WD only) (If applicable) - See Note.

15. Engine and Hydraulic Pump Assembly - See Note.

16. Battery Cables/Routing Installation - See Note.

17. Drive Header Valve (4WD only) (If applicable) - See Note.

18. Rotary Switch - See Note.

19. Lift Cylinder - See Note.

20. Proximity Switch - See Note.

21. Safety Prop - See Note.

22. Manual Descent - See Note.

23. Platform Control Console (Not Shown) - Placard secure and legible, control lever and switches return to neutral, all switch guards are in place, trigger switch and emergency stop switch function properly, Operation & Safety manual in storage box.

24. Platform/Handrail Installation (Not Shown) - See Note.

Figure 2-3. Walk Around Inspection Points - Sheet 2 of 2

Downloaded from www.Manualslib.com manuals search engine

https://truckmanualshub.com/

Function Check

Perform the Function Check as follows:

1. From the ground control panel with no load in the platform:
   - **a.** Check that all switch guards are in place;
   - **b.** Operate all functions. Reference Section 3, Machine ControlS, Indicators and Operation;
   - **c.** Check auxiliary power (or manual descent) (Refer to the auxiliary power (or manual descent) sections of this manual for proper operating procedures.);
   - **d.** Ensure that all machine functions are disabled when the Emergency Stop Button is activated.
2. From the platform control console:
   - **a.** Ensure that the control console is firmly secured in the proper location;
   - **b.** Check that all switch guards are in place;
   - **c.** Operate all functions and check all limiting and cut-out switches. Reference Section 3, Machine ControlS, Indicators and Operation, See Table 2-2 and Table 2-3;
   - **d.** Ensure that all machine functions are disabled when the Emergency Stop Button is activated.

Table 2-2. Maximum Cutout Height

Model	High Drive Cutout
3394RT	6-9 ft (1.9-2.7 m)
4394RT	7-10 ft (2.1-3 m)

Table 2-3. Tilt Cutout Settings

Model	Front to Back	Side to Side
3394RT (ANSI, Aus)	5° to full height	5° to 26 ft (8 m) 4° to 30 ft (9 m) 3° to 33 ft (10 m)
4394RT (ANSI, Aus)	5° to full height	5° to 26 ft (8 m) 4° to 30 ft (9 m) 3° to 43 ft (13 m)
3394RT/4394RT (CSA)	3° to full height	3° to full height
3394RT/4394RT (CE)	5° to full height	3° to full height

Downloaded from www.Manualslib.com manuals search engine

https://truckmanualshub.com/

3. With the platform in the transport (stowed) position:
   a. Drive the machine on a grade, not to exceed the rated gradeability, and stop to ensure the brakes hold;
   b. Ensure the platform tilt indicator light is illuminated.

2.3 OSCILLATING AXLE - LOCKOUT CYLINDER TEST (IF EQUIPPED)

NOTICE

LOCKOUT CYLINDER SYSTEM TEST MUST BE PERFORMED QUARTERLY, ANY TIME A SYSTEM COMPONENT IS REPLACED, OR WHEN IMPROPER SYSTEM OPERATION IS SUSPECTED.

NOTE: *Ensure platform is fully lowered prior to beginning lockout cylinder test, and that the surface used to approach the ramp is flat and level.*

Left Side Wheel Test

1. Place a 4 inch (10.16 cm) high block with ascension ramp in front of left wheel of the oscillating axle.
2. From platform control station, select LOW drive speed.
3. Set the DRIVE control switch into position and carefully drive the machine up ascension ramp until left oscillating axle wheel is on top of block.
4. Verify the axle oscillates to maintain contact with the ground/ramp. (All four wheels on the ground).

Downloaded from www.Manualslib.com manuals search engine

https://truckmanualshub.com/

5. Raise machine platform above stowed position approximately 9 ft (2.7 m) on the 3394RT or 10 ft (3.1 m) on the 4394RT.
6. Carefully drive the machine back off the block and ramp.
7. Have an assistant check to see that the left oscillating axle wheel that was on the block is in position on the ground. The axle should oscillate so that all four wheels maintain contact with the ground.
8. In the current position (platform raised and all four tires on flat and level surface), carefully drive machine up the ramp block again.
9. Have an assistant check to verify that the axle did not oscillate and remained locked (one wheel is off of the ground).
10. Carefully drive the machine back off the block and ramp.
11. Lower the machine platform; the lockout cylinder should then release and allow wheel to rest on the ground. It may be necessary to activate DRIVE to release cylinders.
12. If the lockout cylinders do not function properly, have qualified personnel correct the malfunction prior to any further operation.

Right Side Wheel Test

1. Place a 4 inch (10.16 cm) high block with ascension ramp in front of right wheel of the oscillating axle.
2. From platform control station, select LOW drive speed.
3. Set the DRIVE control switch into position and carefully drive the machine up ascension ramp until right oscillating axle wheel is on top of block.
4. Verify the axle oscillates to maintain contact with the ground/ramp. (All four wheels on the ground).
5. Raise machine platform above stowed position approximately 9 ft (2.7 m) on the 3394RT or 10 ft (3.1 m) on the 4394RT.
6. Carefully drive the machine back off the block and ramp.
7. Have an assistant check to see that the right oscillating axle wheel that was on the block is in position on the ground. The axle should oscillate so that all four wheels maintain contact with the ground.
8. In the current position (platform raised and all four tires on flat and level surface), carefully drive machine up the ramp block again.

Downloaded from www.Manualslib.com manuals search engine

https://truckmanualshub.com/

9. Have an assistant check to verify that the axle did not oscillate and remained locked (one wheel is off of the ground).
10. Carefully drive the machine back off the block and ramp.
11. Lower the machine platform; the lockout cylinder should then release and allow wheel to rest on the ground. It may be necessary to activate DRIVE to release cylinders.
12. If the lockout cylinders do not function properly, have qualified personnel correct the malfunction prior to any further operation.

2.4 DUAL FUEL SYSTEM (IF EQUIPPED)

CAUTION

IT IS POSSIBLE TO SWITCH FROM ONE FUEL SOURCE TO THE OTHER WITHOUT ALLOWING THE ENGINE TO STOP. EXTREME CARE MUST BE TAKEN AND THE FOLLOWING INSTRUCTIONS MUST BE FOLLOWED.

Changing from Gasoline to LP Gas:

1. Start the engine from the ground control station.
2. Open the hand valve on the LP Gas supply tank by turning counterclockwise.
3. While the engine is operating, place the LPG/GAS SELECT switch at the platform control station to the LP Gas position.

Changing from LP Gas to Gasoline:

1. With the engine operating on LP gas under a no load condition, position the LPG/GAS SELECT switch at the platform control station to the GAS SELECT position.
2. If the engine 'stumbles' because of a lack of gasoline, place the switch to the LPG position until the engine regains smoothness, then return the switch to the GAS SELECT position. Repeat as necessary until the engine runs smoothly on gasoline.

Close the hand valve on the LP gas supply tank by turning clockwise.

Downloaded from www.Manualslib.com manuals search engine

https://truckmanualshub.com/

NOTES:

Downloaded from www.Manualslib.com manuals search engine

https://truckmanualshub.com/

SECTION 3. MACHINE CONTROLS, INDICATORS AND OPERATION

3.1 GENERAL

NOTICE

SINCE THE MANUFACTURER HAS NO DIRECT CONTROL OVER MACHINE APPLICATION AND OPERATION, CONFORMANCE WITH GOOD SAFETY PRACTICES IN THESE AREAS IS THE RESPONSIBILITY OF THE USER AND HIS OPERATING PERSONNEL.

This section provides the necessary information needed to understand control functions.

3.2 DESCRIPTION

This machine is a self-propelled hydraulic lift equipped with a work platform on an elevating scissor mechanism.

The JLG Scissor Lift has a primary operator Control Station in the platform. From this Control Station, the operator can drive and steer the machine in both forward and reverse directions, raise and lower the platform and, if equipped, operate the powered deck extension and the outriggers. The machine has a Ground Control Station which will override the Platform Control Station. Ground Controls operate lift up and down. Ground Controls are to be used only in an emergency to lower the platform to the ground should the operator in the platform be unable to do so.

Downloaded from www.Manualslib.com manuals search engine

https://truckmanualshub.com/

3.3 OPERATING CHARACTERISTICS AND LIMITATIONS

General

A thorough knowledge of the operating characteristics and limitations of the machine is always the first requirement for any user, regardless of user's experience with similar types of equipment.

Placards

Important points to remember during operation are provided at the control stations by DANGER, WARNING, CAUTION, IMPORTANT and INSTRUCTION placards. This information is placed at various locations for the express purpose of alerting personnel of potential hazards constituted by the operating characteristics and load limitations of the machine. See foreword for definitions of the above placards.

Capacities

Raising platform above the stowed position with or without any load in platform, is based on the following criteria:

1. Machine is positioned on a smooth, firm and level surface.
2. Load is within manufacturer's rated capacity.
3. All machine systems are functioning properly.

Stability

This machine, as originally manufactured by JLG and operated within its rated capacity on a smooth, firm and level supporting surface, provides a stable aerial platform for all platform positions.

Downloaded from www.Manualslib.com manuals search engine

https://truckmanualshub.com/

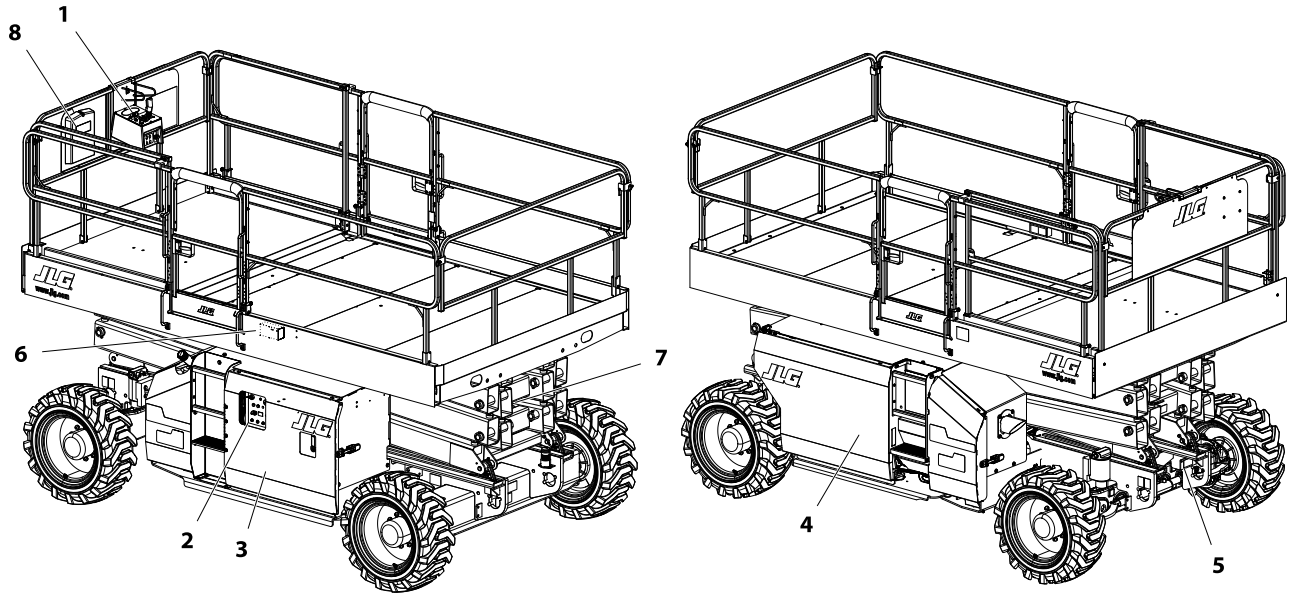

1. Platform Control Station
2. Ground Control Station
3. Fuel/Hydraulic Compartment
4. Engine/Pump/Battery Compartment
5. Platform Manual Descent T-Handle
6. Platform AC Receptacle Plug
7. Scissor Arms - Safety Prop
8. Manual Storage Box

Figure 3-1. Location of Machine Controls. (All Models)

Downloaded from www.Manualslib.com manuals search engine

https://truckmanualshub.com/

3.4 GROUND CONTROLS AND INDICATORS

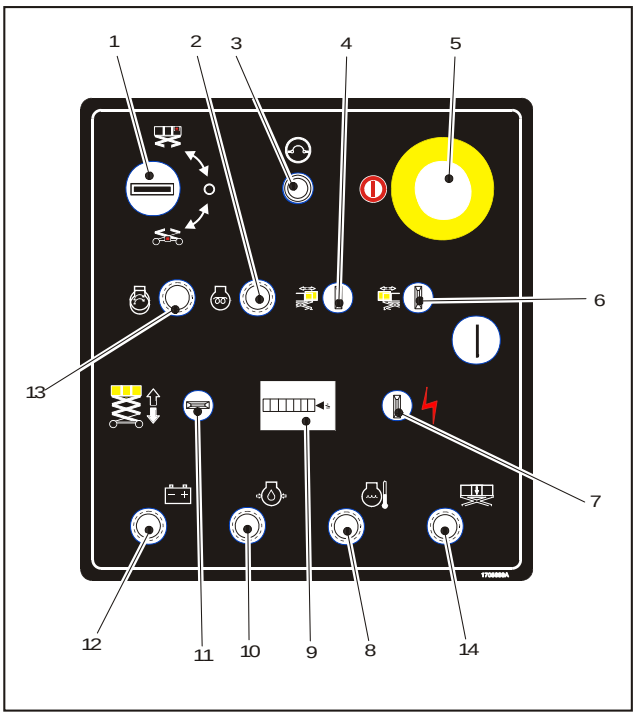

1. Platform/Ground Control Switch
2. Glow Plug (Diesel Only)
3. Circuit Breaker
4. Power Deck (Front) (If equipped)
5. Emergency Stop Switch
6. Power Deck (Rear) (If equipped)
7. Auxiliary Power (If equipped)
8. Water Temperature
9. Hourmeter
10. Oil Pressure
11. Lift
12. Battery
13. Start
14. Platform Overload Indicator (If equipped)

Figure 3-2. Ground Control Station

Downloaded from www.Manualslib.com manuals search engine

https://truckmanualshub.com/

Ground Control Station (See Figure 3-2.)

WARNING

DO NOT OPERATE FROM GROUND CONTROL STATION WITH PERSONNEL IN THE PLATFORM EXCEPT IN AN EMERGENCY.

PERFORM AS MANY PRE-OPERATIONAL CHECKS AND INSPECTIONS FROM THE GROUND CONTROL STATION AS POSSIBLE.

NOTE: *When the machine is shut down for overnight parking or battery charging, the emergency stop and power select switches must be positioned to off to prevent draining the batteries.*

1. **Platform/Ground Control Switch *(Power Select Switch)* -** A three position, key-operated power select switch supplies operating power to the platform or ground controls, as selected. When positioned to platform, the switch provides power to the emergency stop switch at the platform controls. When positioned to ground, the switch provides power to the ground control. The ground control emergency stop switch provides power to the key switch. With the power select switch in the center off position, power is shut off to both platform and ground controls and the key can be removed to disable the machine.

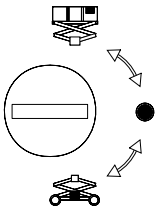

2. **Glow Plug Switch -** *(Diesel Engine Only)* - A momentary contact, push button type switch that supplies electrical power to the engine's glow plugs, when depressed, to assist cold starting. There is a 5 second default timer that will not allow the start button to function before this time has elapsed.

3. **Circuit Breaker -** The circuit breaker will open when there is a short or overload on the machine.

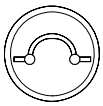

4. **Front Power Deck *(If equipped)*** - A three position, momentary contact switch provides power to the front power deck. When activated, this switch will extend or retract the front power deck.

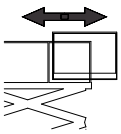

5. **Ignition/Emergency Stop Switch -** A two-position, red, mushroom-shaped ignition/emergency stop switch, when positioned to ON with the power selector switch positioned to ground, furnishes operating power to the ground

Downloaded from www.Manualslib.com manuals search engine

https://truckmanualshub.com/

control station. In addition, the switch can be used to turn off power to the function controls in the event of an emergency. Power is turned on by pulling the switch out (on), and is turned off by pushing the switch in (off).

6. **Rear Power Deck *(If equipped)* -** A three position, momentary contact switch provides power to the rear power deck. When activated, this switch will extend or retract the front power deck.

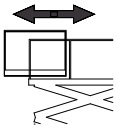

7. **Auxiliary Power *(If equipped) (Optional with power deck option only)* -** This switch is designed to work with the optional power decks. If the machine would lose engine power this switch allows the operator to retract either or both of the power decks.

8. **Water Temperature -** Illuminates when the engine is overheating.

9. **Hourmeter -** The machine is equipped with an hour meter to indicate the number of hours the machine has been operated.

000000
HOURS

10. **Oil Pressure -** Illuminates when the engine oil pressure drops too low.

11. **Lift Switch -** A three position, momentary contact lift control switch provides raising and lowering of the platform when positioned to up or down.

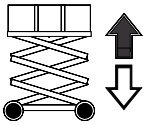

12. **Battery -** Illuminates when the charge in the battery is low.

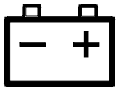

13. **Start Switch -** A momentary contact, push button type switch that supplies electrical power to the starter solenoid when the emergency stop switch is in the ON position and the start button is depressed.

NOTE: *Engine cannot be started while glow plugs are on.*

14. **Platform Overload Indicator *(If equipped)* -** Illuminates when the platform becomes overloaded.

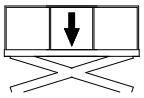

Downloaded from www.Manualslib.com manuals search engine

https://truckmanualshub.com/

Manual Descent Control

The manual descent valve is used, in the event of total power failure, to lower the platform using gravity. The manual descent handle is located on the front of the machine frame. The T-handle is connected, by a cable, to the manual descent valve on the lift cylinder. Pulling the manual descent handle opens the valve spool, lowering the platform.

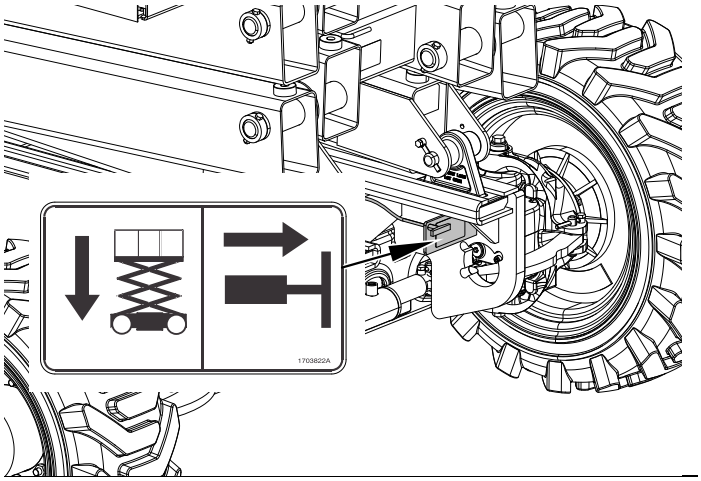

Manual Descent Control - T-Handle Location

Downloaded from www.Manualslib.com manuals search engine

https://truckmanualshub.com/

3.5 PLATFORM CONTROL STATION (SEE FIGURE 3-3.)

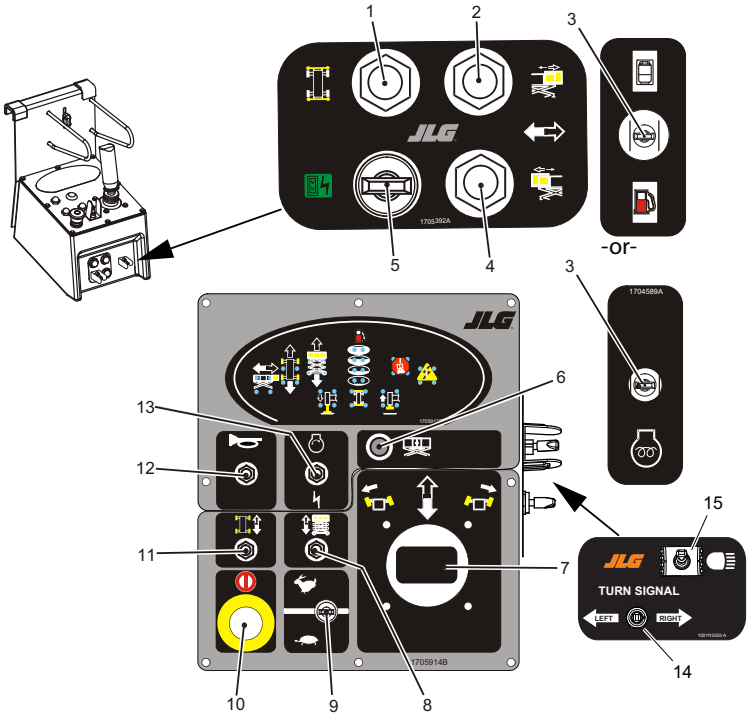

1. Leveling Jack Select (If equipped)
2. Front Deck Extension Select (If equipped)
3. Dual Fuel Select/Glow Plug (If equipped)
4. Rear Deck Extension Select
5. Generator - On/Off
6. Overload Indicator (If equipped)
7. Controller and Steer Switch
8. Lift Select
9. Speed Switch
10. Emergency Stop Switch
11. Drive Select
12. Horn Button
13. Start Switch
14. Turn Signal Switch (Option)
15. Head/Tail Lights Switch (Option)

Figure 3-3. Platform Control Station

Downloaded from www.Manualslib.com manuals search engine

https://truckmanualshub.com/

Platform Controls

NOTICE

CONTROL BOXES SHOULD NOT BE SWITCHED FROM ONE MACHINE TO ANOTHER.

1. **Auto Leveling Jacks -** (Optional) - When depressed the light will illuminate on the indicator pad, enabling that function for 5 seconds. Moving the control handle forward will lower the leveling jacks. Moving the control handle backward will raise the leveling jacks. Once the machine is level the jacks will discontinue extending and the jack set light will turn on.

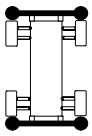

NOTE: *After initial ground contact is made, the auto level function will pause 2-5 seconds and then begin to properly level the machine. Once level, the tilt light on the platform control box will stop blinking.*

NOTE: *There is an override feature on the Auto Leveling system that allows the operator to adjust (trim) the level of the machine to the left or right when the platform is completely lowered. Use the following instructions to adjust the level of the machine.*

   a. Select the leveling jack selection switch and squeeze the trigger switch on the controller.
   b. To adjust the leveling jacks to the left, activate the switch on top of the controller to the left. To adjust to the right, activate the switch on top of the controller to the right. The leveling jack indicator light for the side selected will be lit.

NOTE: *You can not adjust the level of the machine with the EASI-CLADDER™ option installed.*

2. **Front Deck Extension Select (Optional) -** This button must be depressed in conjunction with the control handle to operate the power deck extension. Moving the controller forward extends the deck. Moving the control backward retracts the deck.

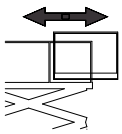

3. **Dual Fuel Select/Glow Plug -** This switch is set up to change from gasoline to propane on a machine equipped with the dual fuel option. On a machine equipped with a diesel engine this switch serves as a glow plug switch.

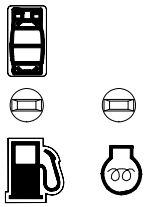

Downloaded from www.Manualslib.com manuals search engine

https://truckmanualshub.com/

4. **Rear Deck Extension Select (Optional) -** This button must be depressed in conjunction with the control handle to operate the power deck extension. Moving the controller forward extends the deck. Moving the control backward retracts the deck.

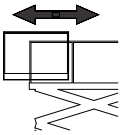

5. **Generator Start Switch -** (Optional) - This toggle switch, when used, turns the generator on and sets the engine speed.

6. **Overload Indicator (If Equipped) -** Indicates the platform has been overloaded. An audible alarm will also signal when the platform is overloaded.

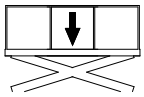

NOTE: *If the Overload Indicator is illuminated, all functions will be prevented from the platform controls. Using the ground controls or manual descent, fully lower the machine and reduce the weight in the platform so as to not exceed the rated workload indicated on the capacity decal.*

7. **Controller and Steer Switch**

   a. **Control Handle -** The control handle controls five functions: drive, lift, power deck, leveling jacks and steer. The drive, lift, power deck or leveling jack function switch must be selected and the red trigger switch must be depressed and held during controller movement, prior to moving the control handle.

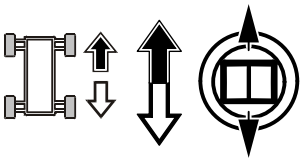

After selecting the drive function, moving the control handle forward will drive the machine forward and moving the control handle backwards will drive the machine backward. After selecting the lift function, moving the control handle forward will lift the platform up and moving the control handle backward will lower the platform. After selecting a power deck function, moving the control handle forward will extend the power deck extension and moving the control handle backward will retract the power deck extension. After selecting the leveling jack function, moving the control handle forward will extend all four leveling jacks. moving the hand controller backward will retract the leveling jacks. The speed on all selected functions, (except leveling jacks), is proportionally controlled by the distance of travel of

Downloaded from www.Manualslib.com manuals search engine

https://truckmanualshub.com/

the hand controller. The thumb-operated steer switch on top of the hand controller activates the steer wheels in the direction activated (right or left).

b. Steer Switch/Auto Leveling Trim Adjust -

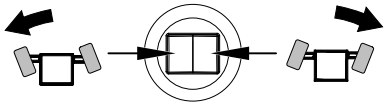

The steer switch/auto leveling trim adjust is located at the top of the control handle. Selecting the drive function and depressing the switch to the right will steer the wheels to the right. Depressing the switch to the left will steer the wheels to the left. When auto leveling is selected this switch is used to manually adjust (trim) the leveling of the machine to the left or right. Refer to "Leveling Jacks" on page 3-19 for leveling jack operating procedures.

8. Lift Select - When selected, the lift function will be active for 5 seconds. Moving the control handle in the forward or reverse direction within the 5 seconds will cause lift motion to occur at a speed determined by the range selected by the Low/High switch and the distance the controller is moved from center. The proportional control does not effect the lift down function.

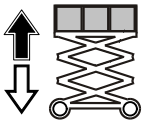

CAUTION

DO NOT "LIFT DOWN" WITHOUT COMPLETELY RETRACTING THE PLATFORM EXTENSION(S).

9. Speed Switch - The three position speed switch permits the operator to select either high engine/high speed, high engine/low speed or mid engine/low speed.

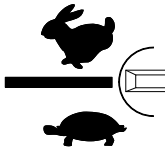

CAUTION

DO NOT USE HIGH RANGE WHEN DRIVING IN CLOSE QUARTERS OR WHEN DRIVING IN REVERSE.

NOTE: *High drive speed is disabled when the platform is raised above the high drive cutout height (refer to Table 2-2). When platform is lowered below high drive cutout height, high drive speed is enabled.*

10. Emergency Stop Switch - A two-position, red, mushroom-shaped emergency stop switch functions to provide power to the platform control station and also to turn off power to the platform function controls in the event of an emergency. With the

Downloaded from www.Manualslib.com manuals search engine

https://truckmanualshub.com/

power select switch positioned to platform, power is turned on by pulling the switch out (on), and is turned off by pushing the switch in (off).

11. **Drive Select Switch -** When selected, the drive function will be active for 5 seconds. Moving the control handle in the forward or reverse direction within the 5 seconds will cause drive motion to occur at a speed determined by the range selected by the speed switch and the distance the controller is moved from center.

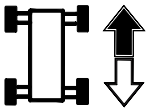

12. **Horn -** This push-button switch, when activated, permits the operator to warn jobsite personnel when the machine is operating in the area.

13. **Start/Auxiliary Power -** This switch, when depressed, sends power to the start solenoid when the emergency stop switch is in the on position. This switch also serves as the auxiliary power switch when equipped.

14. **Turn Signal Switch *(Option)* -** This switch when pushed forward to front of machine turns on the right side turn signals. When pulled rearward turns on the left side turn signals.

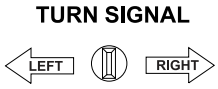

15. **Head/Tail Lights Switch *(Option)* -** This switch when switched-on turns on the machine head and tail lights for when operating in a dark work area.

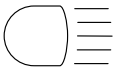

Indicator Control Panel (See Figure 3-4.)

1. **Power Deck Indicator -** This indicator light will illuminate anytime a power deck selection is activated.
2. **Drive Indicator -** This indicator light will illuminate when the drive select function is activated.
3. **Lift Indicator -** This indicator light will illuminate when the lift function is activated.
4. **Fuel Gauge Indicator -** The appropriate light will be illuminated according to the amount of fuel remaining in the lift.
5. **Tilt Indicator -** This light will illuminate anytime the machine is positioned or driven on a tilt greater than the allowable amount.

Downloaded from www.Manualslib.com manuals search engine

https://truckmanualshub.com/

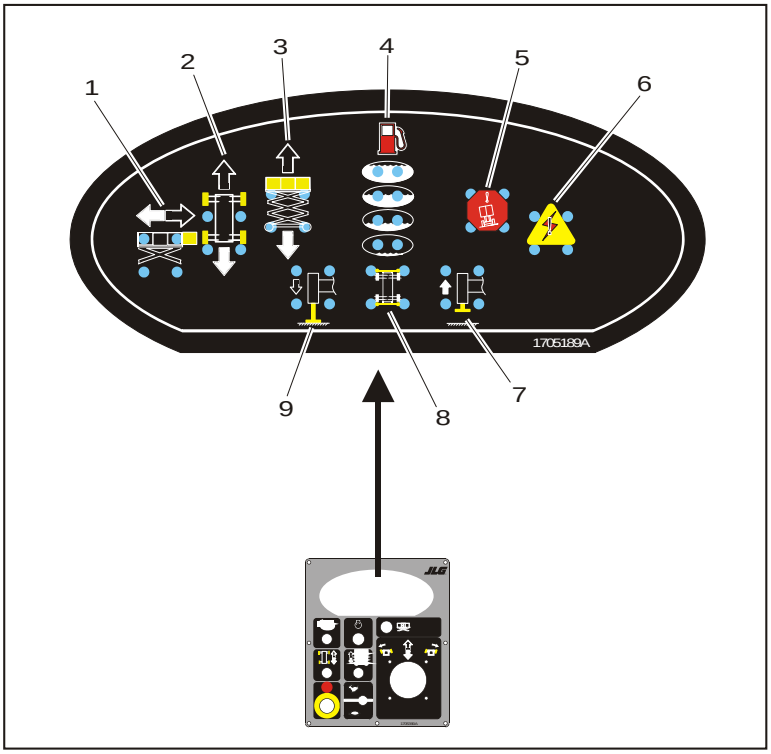

1. Power Deck
2. Drive
3. Lift
4. Fuel Gauge
5. Tilt
6. System Fault
7. Leveling Jacks Fully Retracted
8. Leveling Jacks Operational
9. Leveling Jacks Set

Figure 3-4. Indicator Panel

Downloaded from www.Manualslib.com manuals search engine

https://truckmanualshub.com/

⚠ CAUTION

IF TILT ALARM IS ON WHEN PLATFORM IS RAISED, LOWER PLATFORM COMPLETELY, THEN REPOSITION MACHINE SO THAT IT IS LEVEL BEFORE RAISING PLATFORM.

6. **System Fault Indicator -** This warning light will flash the appropriate distress code (flash code).
7. **Leveling Jacks Fully Retracted -** This indicator light will illuminate when the leveling jacks are fully retracted.
8. **Leveling Jacks Operational -** This indicator light will illuminate when the leveling jacks are being operated.
9. **Leveling Jacks Set -** This indicator light will illuminate when the leveling jacks are set.
10. **Tilt Alarm Warning Horn (Not Shown) -** The Tilt Alarm Warning Horn is activated when the chassis is on a slope greater than the allowable amount.

⚠ CAUTION

DO NOT OPERATE MACHINE IF HIGH DRIVE SPEED OPERATES WHEN PLATFORM IS RAISED ABOVE THE STOWED POSITION.

3.6 ENGINE OPERATION

Platform/Ground Select Switch

The power selector switch functions to direct electrical power to the desired control station. With the switch in the ground position, power is supplied to the emergency stop switch at the ground control station. When the switch is in the platform position, power is supplied to the emergency stop switch at the platform control station. The switch should be in the off position when parking the machine overnight.

Emergency Stop Switch

This switch, when in the on position (pulled out), provides electrical power to the ground controls or platform controls, as applicable. In addition, the switch can be used to turn off power (depressed) to the function controls in the event of an emergency.

Speed Switch

There is a three position speed switch at the platform control station. For high speed (Rabbit), Mid Speed (White Line) and Low Speed (Turtle). All three speeds will work with the drive function. The high speed select will not operate the lift function.

Downloaded from www.Manualslib.com manuals search engine

https://truckmanualshub.com/

Starting Procedure

NOTE: *Initial starting should always be performed from the Ground Control Station.*

1. Check engine oil before attempting to start engine; if necessary, add oil in accordance with Engine Manufacturers Manual.
2. Pull out the red emergency stop switch (ON).
3. Position the platform/ground select switch to the desired operating control station (platform or ground).
4. If operating a dual fuel machine, place the LPG/GASOLINE select switch in the platform to the desired position.

NOTE: *If the LPG system is selected, ensure that the hand valve on the LPG supply tank is opened prior to attempting to start the engine.*

NOTICE

IF ENGINE FAILS TO START PROMPTLY, DO NOT CRANK FOR AN EXTENDED PERIOD. SHOULD ENGINE FAIL TO START ONCE AGAIN, ALLOW STARTER TO "COOL OFF" FOR 2 TO 3 MINUTES. IF ENGINE FAILS TO START AFTER SEVERAL ATTEMPTS, REFER TO ENGINE MAINTENANCE MANUAL.

5. If starting the machine from the ground controls, position the emergency stop switch to on and depress the start button and hold until the engine starts. If starting from the platform controls, position the platform emergency stop switch to on and depress the start button and hold until the engine starts.

NOTICE

ALLOW ENGINE TO WARM-UP FOR A FEW MINUTES BEFORE APPLYING ANY LOAD.

6. After the engine has had sufficient time to warm up, proceed with operation of the unit.

Downloaded from www.Manualslib.com manuals search engine

https://truckmanualshub.com/

3.7 DUAL FUEL SYSTEM

Changing from Gasoline to Liquid Propane Gas (LPG).

1. Start the engine from the platform control station.
2. Open the hand valve on the LPG supply tank by turning counterclockwise.

CAUTION

BE SURE ALL GASOLINE IS EXHAUSTED BEFORE SWITCHING TO LPG.

3. While the engine is operating, place the two position LPG/GAS SELECT switch at the platform control station to LPG.

Changing from LPG to Gasoline:

1. With the engine operating on LPG under a no load condition, position the LPG/GAS SELECT switch at the platform station to the GAS SELECT position.
2. If the engine 'stumbles' because of a lack of gasoline, place the switch to the LPG position until the engine regains smoothness, then return the switch to the GAS SELECT position. Repeat as necessary until the engine runs smoothly on gasoline.
3. Close the hand valve on the LPG supply tank by turning clockwise.

3.8 OPERATING CHARACTERISTICS

Platform Loading

The platform maximum rated load capacity is shown on a placard located on the platform and is based upon the following criteria:

1. The machine is positioned on a smooth, firm and level surface.
2. All braking devices are engaged.
3. The maximum platform capacity is as follows:

Table 3-1. Platform Capacities

	3394RT	4394RT
Single Extension	2250 lbs (1020 kg)	1500 lbs (680 kg)
Dual Extension	2000 lbs (905 kg)	1250 lbs. (565 kg)
Platform Extension	500 lbs (230 kg)	500 lbs (230 kg)

NOTE: *It is important to remember that the load should be evenly distributed on the platform. The load should be placed near the center of the platform when possible.*

Downloaded from www.Manualslib.com manuals search engine

https://truckmanualshub.com/

Traveling (Driving)

WARNING

DO NOT DRIVE WITH PLATFORM RAISED EXCEPT ON A SMOOTH, FIRM AND LEVEL SURFACE FREE OF OBSTRUCTIONS AND HOLES. TO AVOID LOSS OF TRAVEL CONTROL OR UPSET ON GRADES AND SIDESLOPES, DO NOT DRIVE MACHINE ON GRADES OR SIDESLOPES EXCEEDING THOSE SPECIFIED IN SECTION 6.

Traveling Forward

1. Position the platform Emergency Stop Switch to the on position.
2. After starting engine press the drive select switch and move the control grip forward and hold for the duration of travel. Drive speed is determined by the distance the control handle is moved from the center off position. For additional drive speed, position the high speed switch to high while operating in the drive forward mode.

Traveling in Reverse

1. Position the emergency stop switch at the platform control station to the on position.
2. Press the drive switch and move the control handle backward (reverse) and hold for the duration of travel. Drive speed is determined by the distance the control handle is moved from the center off position. Do not activate the high engine speed switch when traveling in reverse.

Traveling on Grade

If driving at high drive up a grade and the incline exceeds 8° incline, the drive function will cut back to mid drive speed. The drive pump will shift back into high drive once the incline decreases to 5°. There will be a 2 second delay before the machine goes back to high drive.

Steering

NOTE: *When static steering is performed it will bring the engine up to high speed.*

To steer the machine, the thumb operated steer control switch on the controller handle is positioned to the right for traveling right, or to the left for traveling left. When released, the switch will return to the center-off position and the wheels will remain in the previously selected position. To return the wheels to the straightened position, the switch must be activated in the opposite direction until the wheels are centered.

Downloaded from www.Manualslib.com manuals search engine

https://truckmanualshub.com/

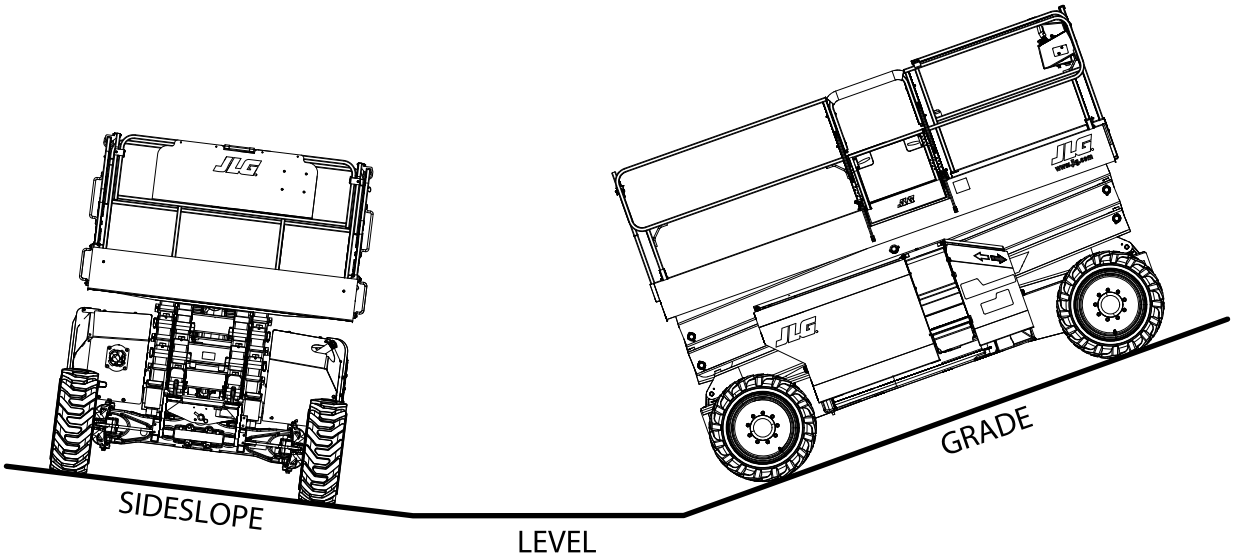

Figure 3-5. Grade and Sideslope

Downloaded from www.Manualslib.com manuals search engine

https://truckmanualshub.com/

Leveling Jacks

The machine may be equipped with auto leveling jacks with a manual adjust feature. These leveling jacks are operated through one switch unlike the traditional four switch system. The leveling jacks are operated by a bang bang valve.

NOTE: *The engine speed will drop when the leveling jacks are activated.*

Auto Leveling

1. With the machine in the stowed position turn the power on, start machine and depress the leveling jack selection switch located on the front of the platform control box.
2. While squeezing the trigger switch on the controller, move the controller forward.
3. Once the leveling jacks make contact with the ground surface there will be up to a 5 second delay before the actual auto leveling begins.

NOTE: *Due to varying ground conditions, there may be several delays between machine level corrections. Be sure ample time is allowed for all leveling adjustments to be completed.*

4. Continue to engage the leveling jacks until the tilt light stops blinking and is no longer lit.

NOTE: *If you receive a 2/5 flash code through the system fault light at the platform control station the machine is unable to level. You must reposition and try again.*

5. To retract the leveling jacks, depress the leveling jack selector switch and move the controller backward until the desired position is obtained.

NOTE: *The tilt light serves as an indicator that the machine is outside the allowable lifting operation. When the machine reaches a position within level of the specific market specification, the tilt light will go out. Once the light is out, the level adjustment of the machine may still be improved. (Refer to Section , Manual Level Adjustment (Trim)).*

NOTE: *There is a limit switch that senses when all four cylinders are fully retracted and this will light up the four leveling jack lights in the platform control station.*

The proximity switch and elevation sensor will not allow the jacks to be extended or retracted when the platform is above the stowed position. If there is a proximity switch failure or elevation sensor failure, the leveling jacks function is locked out.

Downloaded from www.Manualslib.com manuals search engine

https://truckmanualshub.com/

Manual Level Adjustment (Trim)

NOTE: *There is an override feature on the Leveling Jack system that allows the operator to adjust (trim) the level of the machine to the left or right when the platform is completely lowered. Use the following instructions to adjust the level of the machine.*

1. With the machine in the stowed position turn the power on, start machine and depress the leveling jack selection switch located on the front of the platform control box.
2. To adjust (trim) the machine to the right, activate the steer switch on the top of the controller to the right until the desired position is reached.
3. To adjust (trim) the machine to the left, activate the steer switch on the top of the controller to the left until the desired position is reached.

NOTE: *Anytime the trim function is used there is a possibility that the machine may become out of level. At this time the machine will no longer lift but the machine can be lowered.*

NOTE: *The machine must be in the stowed position before the trim function is operable.*

NOTE: *You can not adjust the level of the machine with the EASI-CLADDER™ option installed.*

Raising and Lowering Platform

⚠ WARNING

DO NOT RAISE PLATFORM EXCEPT ON A SMOOTH, FIRM AND LEVEL SURFACE FREE OF OBSTRUCTIONS AND HOLES.

There is a flow control valve which controls both the lift up and lift down speeds. Anytime you abruptly change lift directions, there is a three second delay between lift up and lift down.

Raising

1. With the engine running, place the power select switch to desired position (platform or ground).
2. Position the applicable emergency stop switch to the ON position.
3. If operating from the ground controls, position the lift switch to up and hold until desired elevation is achieved. If operating from the platform controls, press the lift switch then move the control handle forward and hold until desired elevation is reached. Lift speed is determined by the distance the control handle is moved from the off center position. If the lift switch is not activated within 5 seconds after the trigger switch is pressed, power is removed from the cir-

Downloaded from www.Manualslib.com manuals search engine

https://truckmanualshub.com/

cuit and the lift select switch must be pressed again before lifting can be performed.

Lowering

WARNING

ENSURE SCISSOR ARM AREA IS FREE OF PERSONNEL PRIOR TO LOWERING PLATFORM.
ENSURE PLATFORM EXTENSION(S) IS COMPLETELY RETRACTED PRIOR TO LOWERING PLATFORM.

- If operating from the ground controls, position the lift switch to down and hold until desired elevation is achieved or until platform is fully lowered.
- If operating from the platform controls, press the lift switch and then move the control handle backward and hold until desired elevation is reached or until platform is fully lowered.

Platform Extension

The machine is equipped with either single or dual power deck extensions, which add 4 ft (1.2 m) to the front or rear of the platform, giving the operator better access to worksites. To extend the deck, select either the front or rear deck extension select switch, depress the switch in conjunction with the controller. Moving the controller forward extends the deck and moving the controller backwards retracts the deck. Maximum capacity for each deck extension is 500 lb (230 kg).

WARNING

DO NOT 'LIFT DOWN' WITHOUT COMPLETELY RETRACTING THE PLATFORM EXTENSION.

Power Deck

The power deck is operated through a non proportional valve.

When operating the power deck from the platform controls, select front deck extension, rear deck extension or both and activate the joystick forward to extend and backward to retract.

NOTE: *There is a 5 second time out after the joystick is released. If one extension is selected and released the opposite deck extension cannot be selected for 5 seconds.*

Downloaded from www.Manualslib.com manuals search engine

https://truckmanualshub.com/

When operating the power deck from the ground control station, activate and hold the auxiliary power switch, select, activate and hold the proper deck extension to be adjusted (front or rear). If both decks are selected at the same time, only the front deck will be active.

NOTE: *The power deck extension switches function in the direction they are operated.*

WARNING

BE SURE AND RETRACT ANY POWER DECK BEFORE LOWERING MACHINE.

Auxiliary Power

The auxiliary power system is designed to provide power to the power deck extensions in the event of loss of engine power. To operate, pull emergency stop switch on, activate and hold auxiliary power switch, select desired deck extension and (from platform) activate the joystick forward to extend or backward to retract. From ground control activate the desired deck extension.

NOTE: *The emergency stop switch must be on in order to operate the auxiliary power.*

Generator

When the generator switch is activated the engine RPM will speed up. When the joystick is triggered the generator will shut off.

Downloaded from www.Manualslib.com manuals search engine

https://truckmanualshub.com/

3.9 PARKING AND STOWING

Park and stow the machine as follows:

1. Drive the machine to a reasonably well-protected and well-ventilated area.
2. Ensure the platform is fully lowered.
3. Position the emergency stop switch to the off position.
4. If necessary, cover the instruction placards, caution and warning decals so that they will be protected from hostile environment.
5. Chock at least two wheels when parking the machine for an extended period of time.
6. Turn the power selector switch to off and remove the key to disable the machine and prevent unauthorized use.

3.10 TIE DOWN/LIFT LUGS

Tie Down

When transporting the machine, the platform extensions must be fully retracted and the platform fully lowered in the stowed mode with the machine securely tied down to the truck or trailer deck. Refer to the four tie down/lift lugs eyes. Reference Figure 3-7., Lifting and Tie Down Chart (Sheet 2 of 2).

Lifting

If it becomes necessary to lift the machine, it is possible to do so from the tie down/lift lugs. These lugs enable the machine to be lifted using cranes or other suitable lifting devices.

NOTE: *If lifting becomes necessary from the lifting lugs, JLG Industries Inc. recommends the use of a proper spreader bar to avoid damage to the machine.*
Cranes or other lifting devices must be capable of handling the weights listed in Section 6.

3.11 TOWING

It is not recommended that this machine be towed, except in the event of an emergency such as a machine malfunction or a total machine power failure. Refer to Section 5 for emergency towing procedures.

Downloaded from www.Manualslib.com manuals search engine

https://truckmanualshub.com/

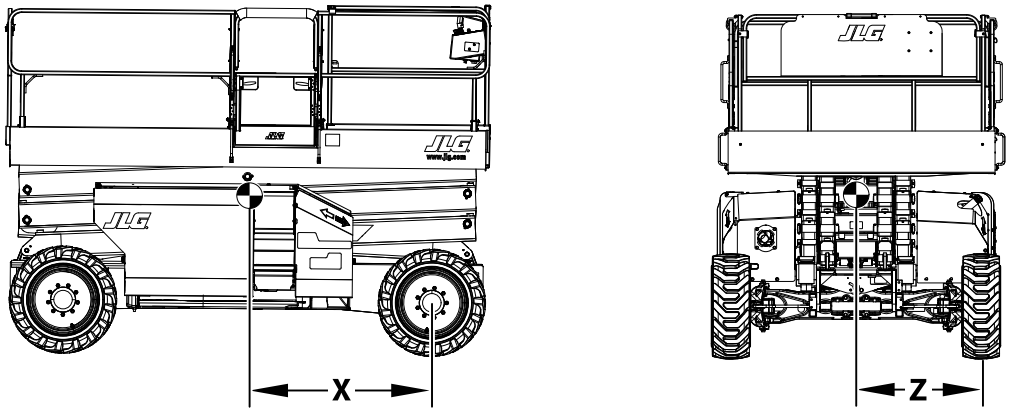

MODEL(S)	WHEELBASE		X		Z	
	(in)	(cm)	(in)	(cm)	(in)	(cm)
3394/4394RT	116	295	58	147	39	100

Figure 3-6. Lifting and Tie Down Chart (Sheet 1 of 2)

Downloaded from www.Manualslib.com manuals search engine

https://truckmanualshub.com/

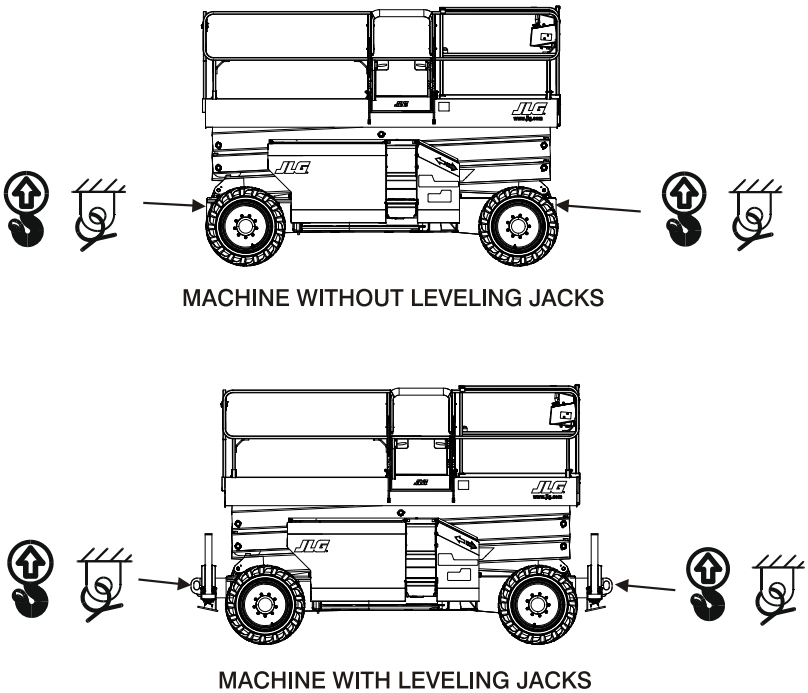

Figure 3-7. Lifting and Tie Down Chart (Sheet 2 of 2)

Downloaded from www.Manualslib.com manuals search engine

https://truckmanualshub.com/

NOTES:

Downloaded from www.Manualslib.com manuals search engine

https://truckmanualshub.com/

SECTION 4. EMERGENCY PROCEDURES

4.1 GENERAL

This section provides information on the procedures to be followed and on the systems and controls to be used in the event an emergency situation is encountered during machine operation. Prior to operation of the machine and periodically thereafter, the entire operating manual, including this section, should be reviewed by all personnel whose responsibilities include any work or contact with the machine.

4.2 EMERGENCY TOWING PROCEDURES

Towing this machine is prohibited, unless properly equipped. However, provisions for moving the machine, in case of a malfunction or power failure, have been incorporated. The following procedures are to be used ONLY for emergency movement to a suitable maintenance area.

1. Chock wheels securely.
2. Disengage drive hubs by reversing disconnect caps.
3. Connect suitable equipment, remove chocks, and move machine.
4. After moving machine, complete the following procedures:
   - **a.** Position machine on a firm and level surface.
   - **b.** Chock wheels securely.
   - **c.** Engage drive hubs by reversing disconnect caps on hubs.
   - **d.** Remove chocks from wheels as needed.

Downloaded from www.Manualslib.com manuals search engine

https://truckmanualshub.com/

4.3 EMERGENCY CONTROLS AND THEIR LOCATIONS

Emergency Stop Switch

These large red buttons, one located at the Ground Control Station and one at the Platform Control Station, will immediately stop the machine when depressed.

WARNING

CHECK MACHINE DAILY TO MAKE SURE EMERGENCY STOP BUTTON IS IN PLACE AND THAT GROUND CONTROL INSTRUCTIONS ARE IN PLACE AND LEGIBLE.

Ground Control Station

The Ground Control Station is located on the left side of the machine frame. The controls on this panel provide the means for overriding the platform controls and for controlling the platform lift up and down functions from the ground. Place the power select switch in the ground position and operate the lift switch to lift up or down.

Manual Descent

The manual descent valve is used, in the event of total power failure, to lower the platform using gravity. The manual descent handle is located on the front of the machine frame. The handle is connected, by a cable, to the manual descent valve on the lift cylinder. Pulling the manual descent ring opens the valve spool, lowering the platform.

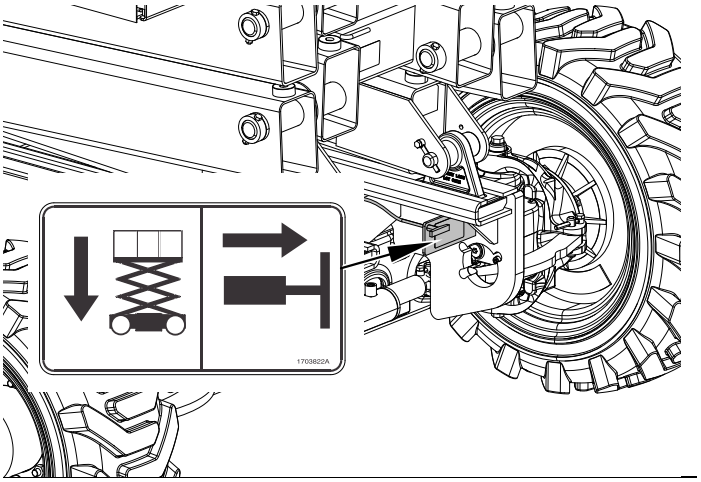

Manual Descent Control - T-Handle Location

Downloaded from www.Manualslib.com manuals search engine

https://truckmanualshub.com/

4.4 EMERGENCY OPERATION

Use of Ground Controls

NOTICE

KNOW HOW TO USE THE GROUND CONTROLS IN AN EMERGENCY SITUATION.

Ground personnel must be thoroughly familiar with the machine operating characteristics and the ground control functions. Training should include operation of the machine, review and understanding of this section and hands-on operation of the controls in simulated emergencies.

Operator Unable to Control Machine

1. Operate the machine from ground controls ONLY with the assistance of other personnel and equipment (cranes, overhead hoists, etc.) as may be required to safely remove the danger or emergency condition.
2. Other qualified personnel on the platform may use the platform controls. DO NOT CONTINUE OPERATION IF CONTROLS DO NOT FUNCTION NORMALLY.
3. Cranes, forklift trucks or other equipment which may be available are to be used to remove platform occupants and stabilize motion of the machine in case machine controls are inadequate or malfunction when used.

Platform Caught Overhead

If the platform becomes jammed or snagged in overhead structures or equipment, do not continue operation of the machine from either the platform or the ground until the operator and all personnel are safely moved to a secure location. Only then should an attempt be made to free the platform using any necessary equipment and personnel. Do not operate controls to cause one or more wheels to leave the ground.

Righting of Tipped Machine

A forktruck of suitable capacity or equivalent equipment should be placed under the elevated side of the chassis, with a crane or other suitable lifting equipment used to lift the platform while the chassis is lowered by the forklift or other equipment.

Post-Incident Inspection

Following any incident, thoroughly inspect the machine and test all functions first from the ground controls, then from the platform controls. Do not lift above 10 feet (3 meters) until you are secure that all damage has been repaired, if required, and that all controls are operating correctly.

Downloaded from www.Manualslib.com manuals search engine

https://truckmanualshub.com/

4.5 INCIDENT NOTIFICATION

It is imperative that JLG Industries, Inc. be notified immediately of any incident involving a JLG product. Even if no injury or property damage is evident, the Product Safety and Reliability Department at the factory should be contacted by telephone and provided with all necessary details.

Contact at 1-877-JLG-SAFE (554-7223) between the hours of 8:00 AM - 4:45 PM Eastern Standard time.

It should be noted that failure to notify the Manufacturer of an incident involving a JLG Industries product within 48 hours of such an occurrence may void any warranty consideration on that particular machine.

Downloaded from www.Manualslib.com manuals search engine

https://truckmanualshub.com/

SECTION 5. GENERAL SPECIFICATIONS AND OPERATOR MAINTENANCE

5.1 INTRODUCTION

This section of the manual provides additional necessary information to the operator for proper operation and maintenance of this machine.

The maintenance portion of this section is intended as information to assist the machine operator to perform daily maintenance tasks only, and does not replace the more thorough Preventive Maintenance and Inspection Schedule included in the Service and Maintenance Manual.

Other Publications Available Specific to this Machine:

Service and Maintenance Manual.....3121642

Illustrated Parts Manual 3121643

5.2 SUPPLEMENTAL INFORMATION

The following information is provided in accordance with the requirements of the European Machinery Directive 2006/42/EC and is only applicable to CE machines.

For electric powered machines, the equivalent continuous AWeighted sound pressure level at the work platform is less than 70dB(A).

For combustion engine powered machines, guaranteed Sound Power Level (LWA) per European Directive 2000/ 14/ EC (Noise Emission in the Environment by Equipment for Use Outdoors) based on test methods in accordance with Annex III, Part B, Method 1 and 0 of the directive, is 109 dB.

The vibration total value to which the hand-arm system is subjected does not exceed 2,5 m/s2. The highest root mean square value of weighted acceleration to which the whole body is subjected does not exceed 0,5 m/s2.

Downloaded from www.Manualslib.com manuals search engine

https://truckmanualshub.com/

5.3 OPERATING SPECIFICATIONS

Table 5-1. Operating Specifications

Model	3394RT	4394RT
Maximum Occupants Single Extension: Dual Extension:	 6 6	 6 6 - ANSI/CSA 5 - CE ONLY
Maximum Workload (Capacity): Single Extension: Dual Extension: Extension Only:	 2250 lb. (1020 kg) 2000 lb. (905 kg) 500 lb. (230 kg)	 1500 lb. (680 kg) 1250 lb. (565 kg) 500 lb. (230 kg)
Maximum Travel Grade (Gradeability - See Figure 3-5.): 2 WD 4WD	 35% 45%	
Maximum Travel Grade (Sideslope - See Figure 3-5.) :	3°	
Maximum Platform Height	33 ft (10.1m)	43 ft (13.11m)
Maximum Drive Speed 2 WD Maximum Drive Speed 4WD	3.0 mph (4.8 kph) 3.5 mph (5.6 kph)	3.0 mph (4.8 kph) 3.5 mph (5.6 kph)
LIft Up Speed (Stowed to Full Height)	32 - 39 seconds	40 - 45 seconds

Table 5-1. Operating Specifications

Model	3394RT	4394RT
Lift Down Speed (Full Height to Stowed)	32 - 39 seconds	40 - 45 seconds
Maximum Wind Speed	28 mph (12.5 m/s)	
Maximum Horizontal Manual Side Force: Single Extension Dual Extension Single Extension (CE/AUS) Dual Extension (CE/AUS)	 335 lb force (1490 N) 300 lb force (1335 N) 90 lb force (400 N) 90 lb force (400 N)	 300 lb force (1335 N) 300 lb force (1335 N) 90 lb force (400 N) 90 lb force (400 N)
Maximum Tire Load	Reference Decal on Machine	
Ground Bearing Pressure w/Standard tires	49 psi (3.45 kg/cm^2)	56 psi (3.94 kg/cm^2)
Leveling Jack Bearing Pressure	69 psi (4.9 kg/cm^2)	
Hydraulic System Pressure Main Relief: Lift Up Relief: Steer Relief:	 3000 psi (207 bar) 2700 psi (186 bar) 2800 psi (193 bar)	
Electrical System Voltage	12 Volt	
Inside Turning Radius	8 ft 10.5 in (2.71 m)	

Downloaded from www.Manualslib.com manuals search engine

https://truckmanualshub.com/

Table 5-1. Operating Specifications

Model	3394RT	4394RT
Outside Turning Radius	19 ft 5.5 in (5.93 m)	
Gross Vehicle Weight		
Dual Fuel/Diesel - ANSI/ANSI Export/CSA		
w/ One Extension	11,910 lb. (5,402 kg)	15,250 lb. (6,917 kg)
w/Two Extensions	12,450 lb. (5,647 kg)	15,790 lb. (7,162 kg)
Diesel - CE/AUS		
w/ One Extension	12,900 lbs (5,851 kg)	15,240 lbs (6,913 kg)
w/Two Extensions	13,440 lb. (6,096 kg)	15,780 lbs (7,158 kg)
Note: Certain options or country standards increase weight.		

Dimensional Data

Table 5-2. Dimensional Data

	3394RT	4394RT
Wheelbase	9.67 ft (2.95 m)	
Ground Clearance	12 in (30 cm)	
Machine Height (rails down)	61.75 in (1.6 m)	70.4 in (1.8 m)
Machine Width	7ft 10in (2.4 m)	
Machine Length	13 ft (4 m)	

Capacities

Table 5-3. Capacities

Fuel Tank	31.5 gal (119.2 L)
Hydraulic Tank	32.3 gal (122.2 L)

Downloaded from www.Manualslib.com manuals search engine

https://truckmanualshub.com/

Tires

Table 5-4. Tire Specifications

Size	Ply Rating	Inflation Pressure	Wheel Nut Torque
12 x 16.5 Pneumatic (Non-Marking)	10	90 psi (6 bar)	170 ft lbs (238 Nm)
12 x 16.5 Foam Filled	10	--	170 ft lbs (238 Nm)
33/1550-16.5 Pneumatic	12	90 psi (6 bar)	170 ft lbs (238 Nm)
33/1550 x 16.5 Foam Filled	12	--	170 ft lbs (238 Nm)
33/16LLx16.1 Foam Filled - Sand	10	--	170 ft lbs (238 Nm)
31 x 15.50-15	10	60 psi (4 bar)	170 ft lbs (238 Nm)
IN315/55D20 Pneumatic	12	75 psi (5 bar)	170 ft lbs (238 Nm)

Table 5-4. Tire Specifications

Size	Ply Rating	Inflation Pressure	Wheel Nut Torque
IN315/55D20 Foam Filled	12	--	170 ft lbs (238 Nm)

Downloaded from www.Manualslib.com manuals search engine

https://truckmanualshub.com/

Engines

Table 5-5. Deutz - D 2.9 L4 - T4F Engine Specifications

Emissions		EPA - Tier 4 Final
Fuel Type:		Diesel
Oil Capacity		2.35 Gal. (8.9 L) w/Filter
Coolant Capacity		0.79 Gal. (3.0 L) - Engine Only
Engine RPM Control		Deutz Electronic - EMR4
Low RPM Set		1200 RPM
High RPM Set		2600 RPM
Alternator		95 Amp, 12V, Belt Drive
Battery		112 Amp-Hour, 950 Cold Cranking Amps, 12 VDC
Fuel Consumption:	Low RPM High RPM	1.3 GPH (4.9 lph) 1.6 GPH (6.0 lph)
Displacement		2.9L - 2925 cm^3 (179 cu. in.)
Horsepower		49 Hp (36.4 Kw) @ 2600 RPM
Torque Rating		108 Ft. lb. (147 Nm) @ 1600 rpm
Cylinder Firing Order		1-3-4-2

Table 5-6. Deutz - D 2011 L03 - Engine Specifications

Fuel	DIesel
Oil Capacity	8.5 Quarts (8 L) w/Filter
Low RPM	900
High RPM	2800
Alternator	95 Amp, Belt Drive
Battery	112 Amphour, 950 Cold Cranking Amps, 12 VDC
Fuel Consumption Low RPM High RPM	 1.3 GPH (4.9 lph) 1.6 GPH (6.0 lph)
Horsepower	48 @ 2800 RPM, full load

Downloaded from www.Manualslib.com manuals search engine

https://truckmanualshub.com/

Table 5-7. GM 3.0L - Engine Specifications

Fuel	Gasoline or Gasoline/LP Gas
No. of Cylinders	4
HorsePower: Gasoline LP	 83 hp @ 3000 rpm 75 hp @ 3000 rpm
Bore	4.0 in. (101.6 mm)
Stroke	3.6 in. (91.44 mm)
Displacement	181 cu.in. (3.0 L, 2966 cc)
Oil Capacity w/filter Tier/Stage 3	4.5 qts. (4.25 L) 5.0 qts. (4.73L)
Minimum Oil Pressure: at idle at operation	 6 psi (0.4 Bar) @ 1000 rpm 18 psi (1.2 Bar) @ 2000 rpm
Compression Ratio Tier/Stage 3	9.2:1 10.25:1
Firing Order	1-3-4-2
Maximum RPM	2800

Critical Stability Weights

Table 5-8. Critical Stability Weights

Component	3394RT	4394RT
Wheel and Tire 12x16.5 Pneumatic 12x16.5 Foam Filled 33/1550-16.5 Pneumatic 33/1550-16.5 Foam Filled 33/16LLx16.1Sand Foam Filled IN315/55D20 Pneumatic IN315/55D20 Foam Filled 31 x 15.50-15	 128 lbs (58 kg) 328 lbs (149 kg) 135 lbs (61 kg) 395 lbs (179 kg) 426 lbs (193 kg) 156 lbs (71 kg) 156 lbs (71 kg) 125 lbs (57 kg)	
Engine (Deutz)	441 lbs (200 kg)	
Engine (GM)	341 lbs (155 kg)	
Battery	65 lbs (30 kg)	

Downloaded from www.Manualslib.com manuals search engine

https://truckmanualshub.com/

Lubrication

Table 5-9. Hydraulic Oil

HYDRAULIC SYSTEM OPERATING TEMPERATURE RANGE	SAE VISCOSITY GRADE
0° to +23° F (-18° to -5° C)	10W
0° to +210° F (-18° to +100° C)	10W-20, 10W-30
+50° to +210° FC (+10° to +100°)	20W-20

NOTE: *Hydraulic oils must have anti-wear qualities at least to API Service Classification GL-3, and sufficient chemical stability for mobile hydraulic system service. JLG Industries recommends Mobilfluid 424 hydraulic oil, which has an SAE viscosity index of 152.*

NOTE: *When temperatures remain below 20° F (-7° C), JLG Industries recommends the use of Mobil DTE13.*

NOTE: *Aside from JLG recommendations, it is not advisable to mix oils of different brands or types, as they may not contain the same required additives or be of comparable viscosities. If use of hydraulic oil other than Mobilfluid 424 is desired, contact JLG Industries for proper recommendations.*

Table 5-10. Lubrication Specifications

KEY	SPECIFICATIONS
MPG	Multipurpose Grease having a minimum dripping point of 350° F. Excellent water resistance and adhesive qualities, and being of extreme pressure type. (Timken OK 40 pounds minimum.)
EPGL	Extreme Pressure Gear Lube (oil) meeting API service classification GL-5 or MIL-Spec MIL-L-2105.
Super Lube®	Synthetic-Based Oil, Non-Flammable. Withstands temperatures within -45° to 450° F (-43° to 232° C). JLG P/N-3020042.
HO	Hydraulic Oil. API service classification GL-3, e.g. Mobil 424.
EO	Engine (crankcase) Oil - Gas - API SM/GL class, ILSAC GF-4, GM 6094M - Diesel - (T4F - API CJ-4), API CJ-4/CG-4 class, ACEA E3-90/E5-02.

Downloaded from www.Manualslib.com manuals search engine

https://truckmanualshub.com/

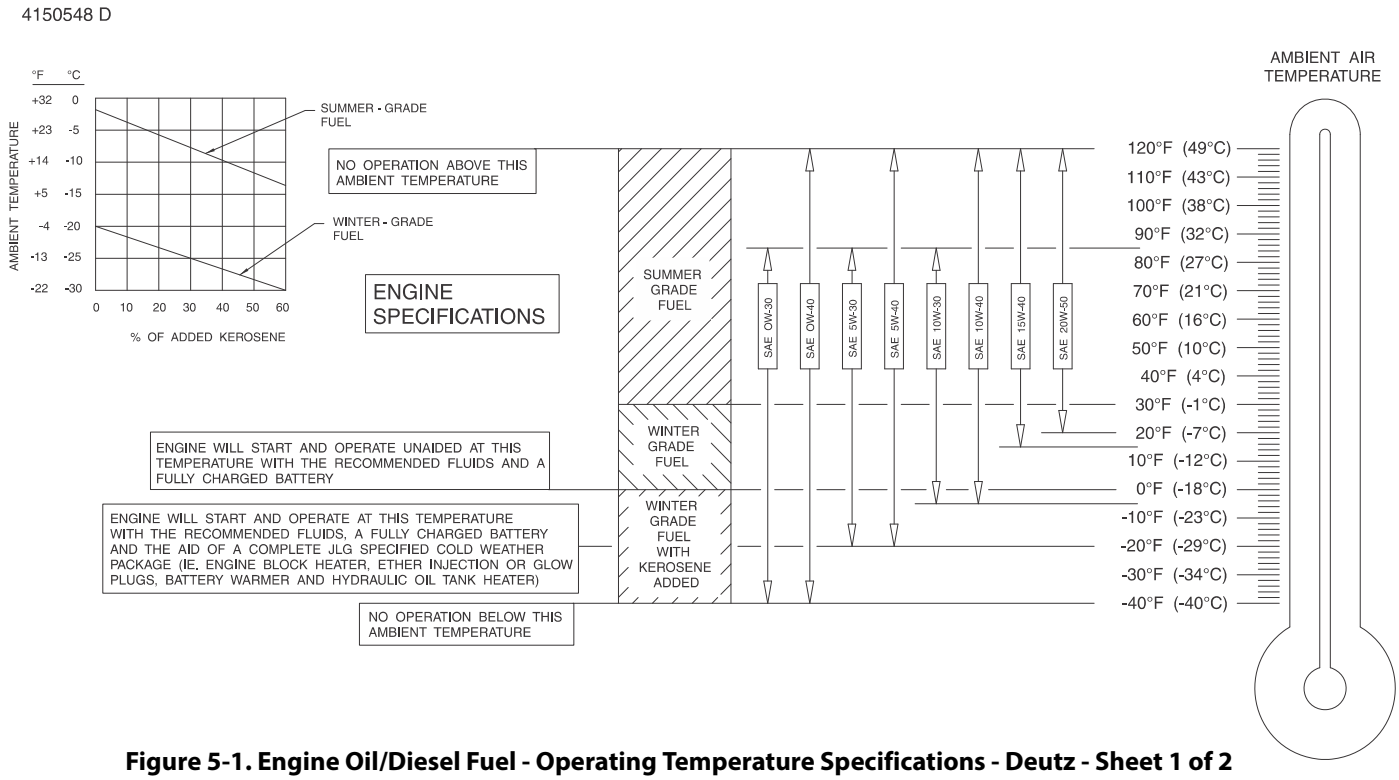

Figure 5-1. Engine Oil/Diesel Fuel - Operating Temperature Specifications - Deutz - Sheet 1 of 2

Downloaded from www.Manualslib.com manuals search engine

https://truckmanualshub.com/

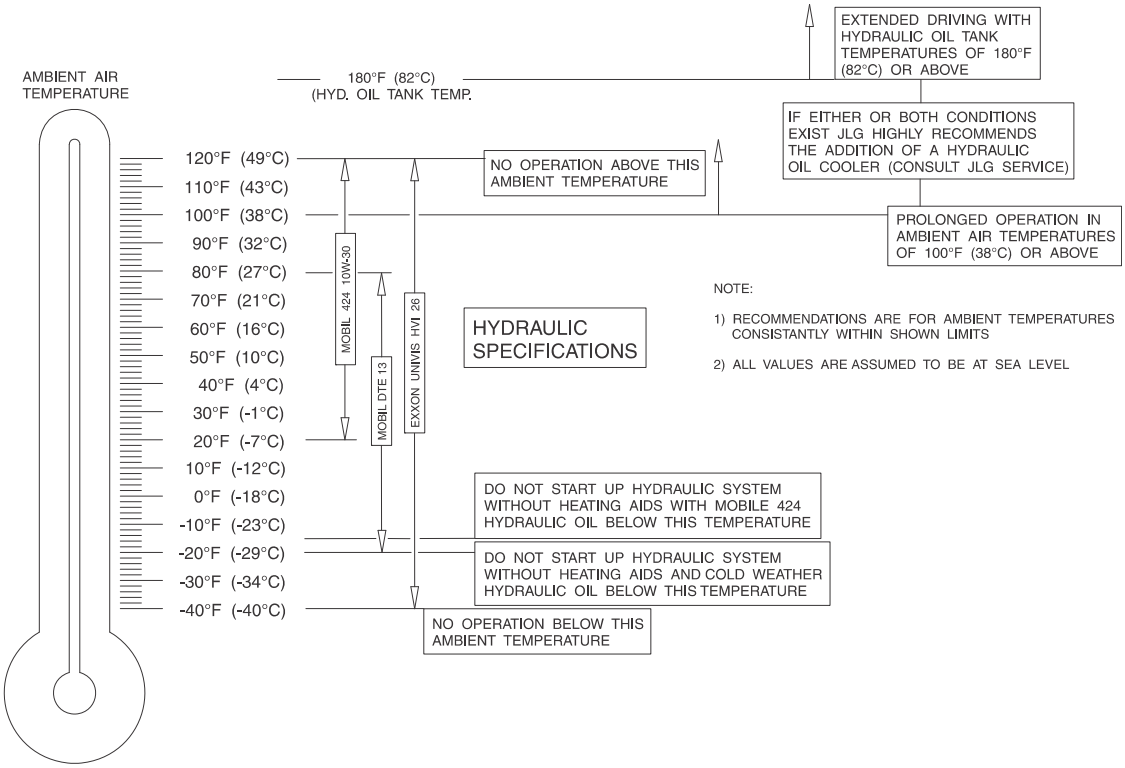

Figure 5-2. Hydraulic Oil - Operating Temperature Specifications - Deutz - Sheet 2 of 2

Downloaded from www.Manualslib.com manuals search engine

https://truckmanualshub.com/

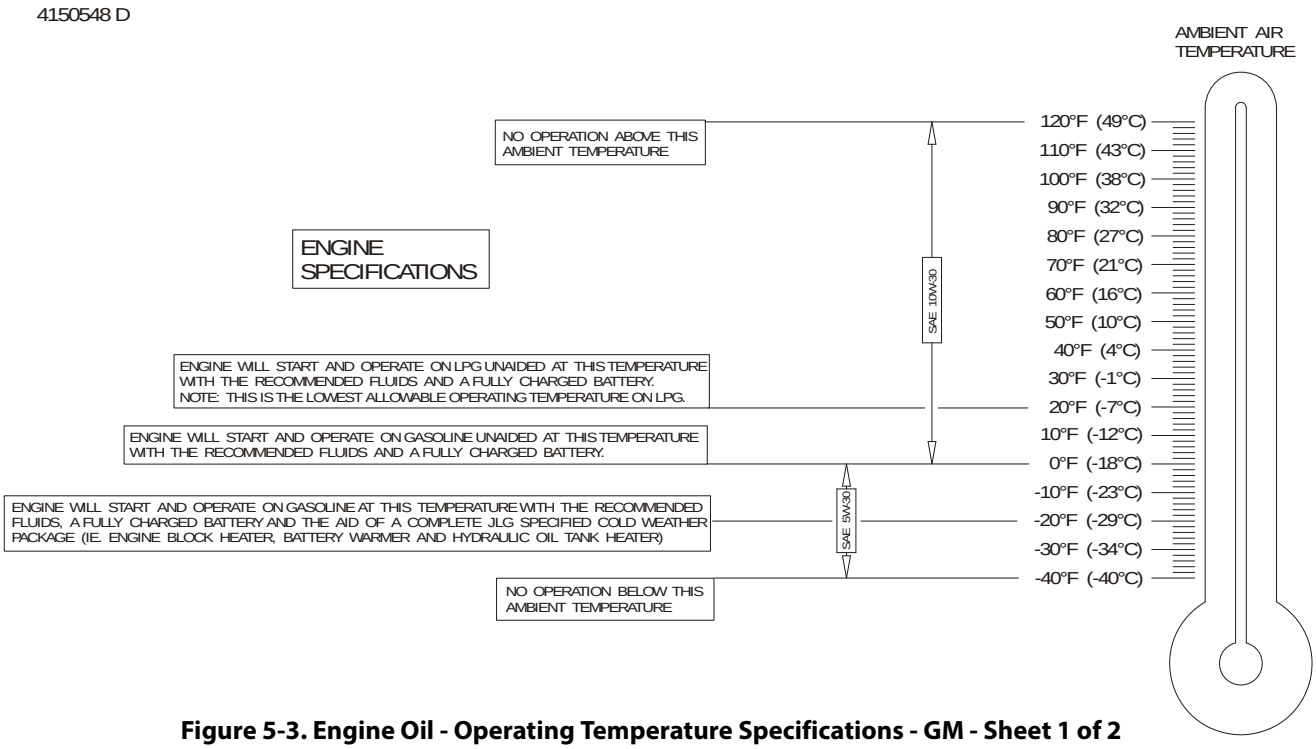

Figure 5-3. Engine Oil - Operating Temperature Specifications - GM - Sheet 1 of 2

Downloaded from www.Manualslib.com manuals search engine

https://truckmanualshub.com/

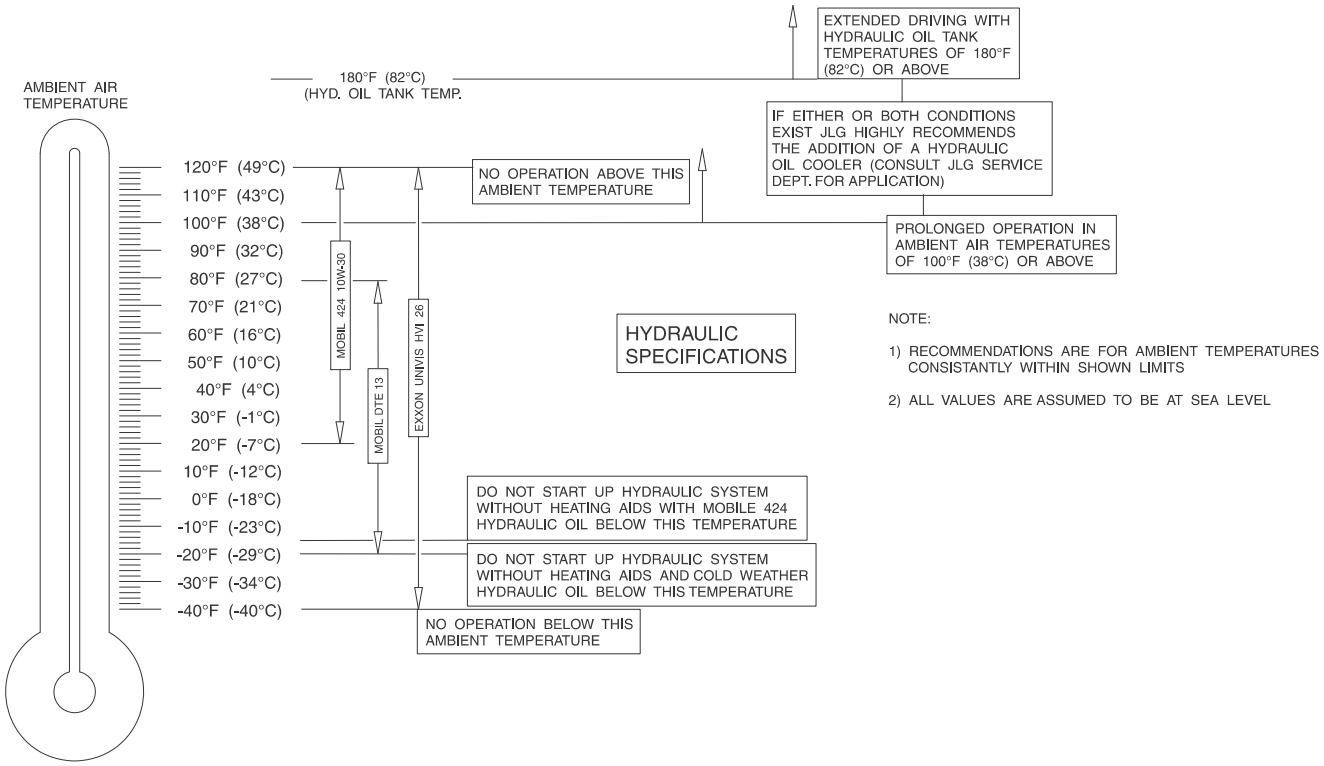

Figure 5-4. Hydraulic Oil - Operating Temperature Specifications - GM - Sheet 2 of 2

Downloaded from www.Manualslib.com manuals search engine

https://truckmanualshub.com/

5.4 OPERATOR MAINTENANCE

Safety Prop

CAUTION

THE SAFETY PROP MUST BE USED WHENEVER MAINTENANCE PERFORMED ON THE MACHINE REQUIRES THE SCISSOR ARMS TO BE RAISED.

To engage the safety prop, raise the unloaded platform, lift the latch release on the safety prop handle at the front of the machine. Lift the safety prop handle from the latch, pull and manually position, engaging the safety prop. Lower the platform until the safety prop rests on the cross member of the arm below. Maintenance can now begin.

To store the safety prop, raise the platform, push the safety prop handle so that the prop can be restored back to its stowed position.

WARNING

TO AVOID PERSONAL INJURY, USE SAFETY PROP FOR ALL MAINTENANCE REQUIRING PLATFORM TO BE ELEVATED.

NOTE: *Be sure to lubricate like items on each side.*

NOTE: *Recommended lubricating intervals are based on machine operations under normal conditions. For machines used in multi-shift operations and/or exposed to hostile environments or conditions, lubrication frequencies must be increased accordingly.*

Operate hydraulic functions through one complete cycle before checking hydraulic oil level in tank. Oil should be visible in ADD sight window on hydraulic tank. If oil is not visible, add oil until oil is visible in both ADD and FULL sight windows on tank. Do not overfill tank.

Any time the pump coupling is removed, coat splines of coupling with Texaco Code 1912 grease prior to assembly.

Downloaded from www.Manualslib.com manuals search engine

https://truckmanualshub.com/

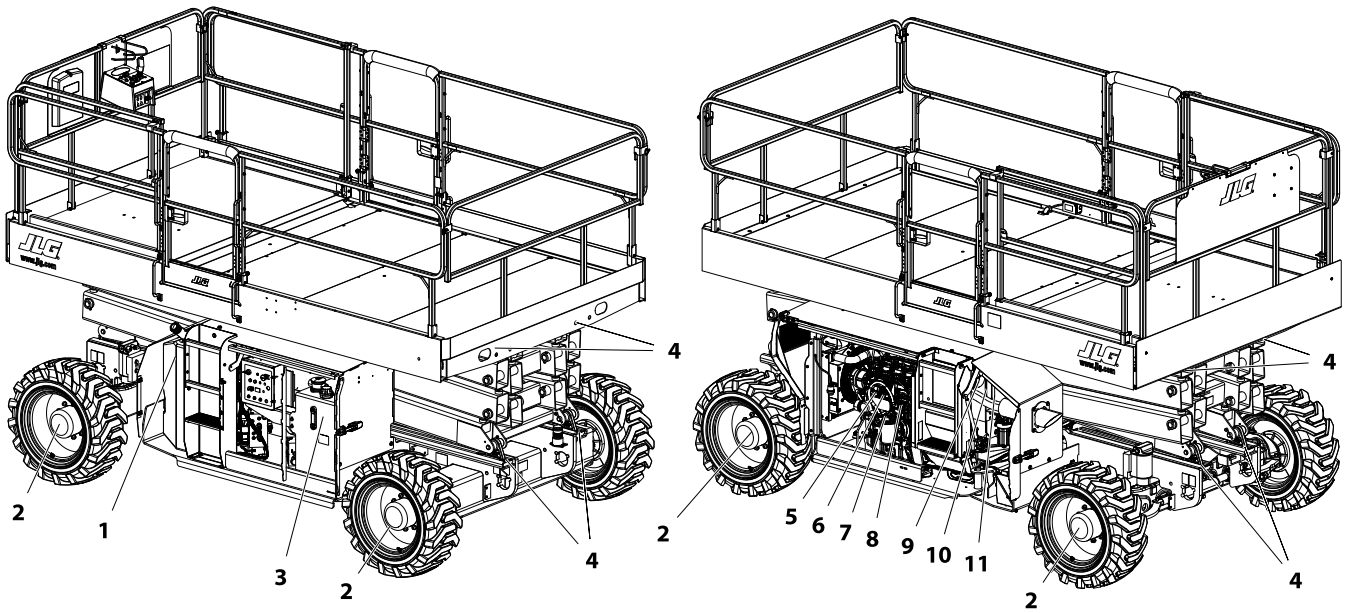

1. Fuel Tank
2. Drive Hubs
3. Hydraulic Oil Tank
4. Sliding Wear Pads
5. Oil Change w/Filter - Deutz
6. Oil Change w/Filter - GM
7. Fuel Filter - Deutz
8. Fuel Filter (Gasoline) - GM
9. Air Filter
10. Electronic Pressure Regulator (LP Only)
11. Fuel Filter (Propane) - GM

Figure 5-5. Operator Maintenance Components (All Models)

Downloaded from www.Manualslib.com manuals search engine

https://truckmanualshub.com/

Fuel Tank

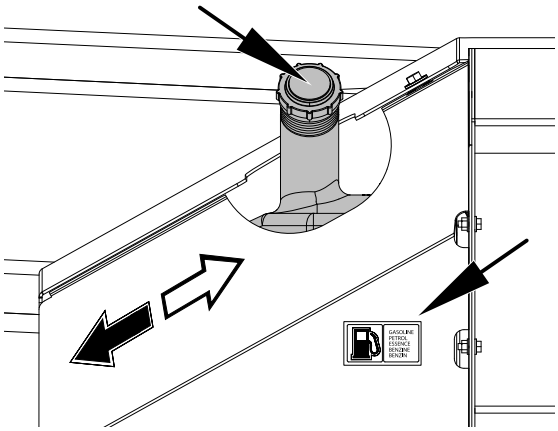

- Fuel - Diesel or Gasoline (Per Engine Type - Reference Decal on Machine)
- Capacity - 31.5 gal (119 l)

Drive Hub

- Lube Points - Fill Plugs (4)
- Lube - EPGL
- Interval - Every 2 years or 1200 hours

Downloaded from www.Manualslib.com manuals search engine

https://truckmanualshub.com/

Hydraulic Oil

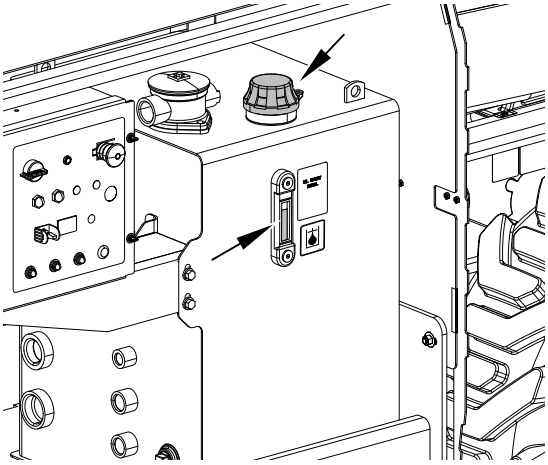

- Lube Point - Fill Cap/Fill Level
- Lube - HO
- Interval - Check oil every 10 hours of operation; change oil every 2 years or 1200 hours of operation.

Sliding Wear Pads

- Lube Points - 8 Sliding Wear Pads
- Lube - MPG
- Interval - Every month or 50 hours.

Oil Change w/Filter - Deutz - D 2011 L03

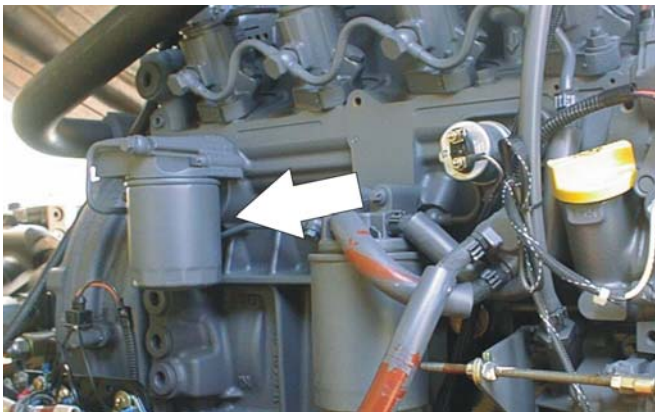

- Lube Point(s) - Fill Cap/Spin-on Element (JLG P/N 7016331)
- Capacity - 6.3 qt. (5.9 L) engine only
- Lube - EO - Spec: API CJ-4/CG-4 class, ACEA E3-90/E5-02, for Oil Viscosity Ref. Figure 5-1. on page 5-8 - Operating Temperature Range Chart
- Interval - Every Year or 600 hours of operation
- Comments - Check level daily/Change in accordance with engine manual.

Downloaded from www.Manualslib.com manuals search engine

https://truckmanualshub.com/

Oil Change w/Filter - Deutz D 2.9 L4 - T4F

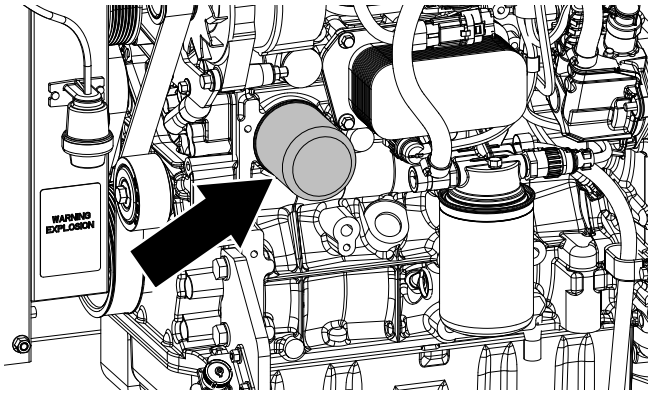

- Lube Point(s) - Fill Cap/Spin-on Element (JLG P/N 7016641)
- Capacity - 2.35 Gal. (8.9 L) engine only
- Lube - EO - Spec: API CJ-4 class, for Viscosity Ref. Figure 5-1. on page 5-8 - Operating Temperature Range Chart
- Interval - Every Year or 600 hours of operation
- Comments - Check level daily/Change in accordance with engine manual.

Oil Change w/Filter - GM - 3.0 - Dual Fuel

- Lube Point(s) - Fill Cap/Spin-on Element (JLG P/N 7027965)
- Capacity- 4.5 qt. (4.25 L) w/filter - Tier 2 - 5.0 qt. (4.73 L) w/filter - Tier 3
- Lube - EO - Spec: API SM/GL class, ILSAC GF-4, GM 6094M, for Viscosity Ref. Figure 5-3. on page 5-10 - Operating Temperature Range Chart
- Interval - 3 Months or 150 hours of operation
- Comments - Check level daily/Change in accordance with engine manual.

Downloaded from www.Manualslib.com manuals search engine

https://truckmanualshub.com/

Fuel Filter - Deutz D 2011 L03 - Engine

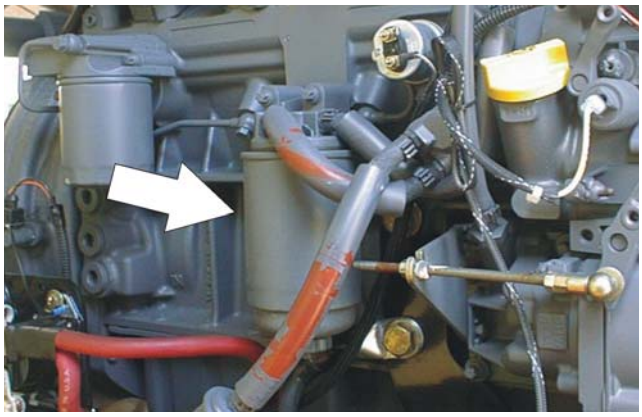

- Lube Point(s) - Replaceable Element
- Interval - Every Year or 600 hours of operation

Fuel Filter - Deutz D 2.9 L4 - T4F - Engine

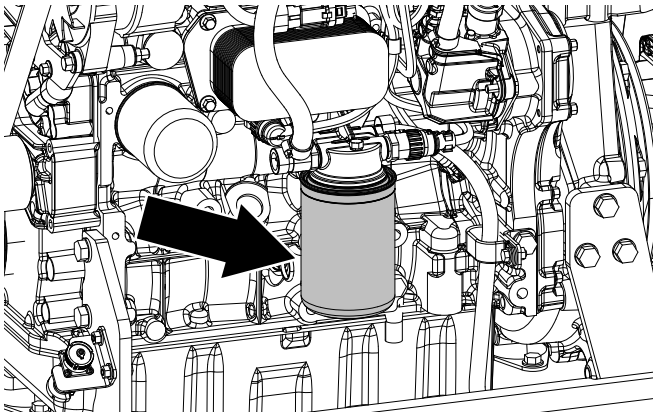

- Lube Point(s) - Replaceable Element - on engine and Pre-Filter with pressure sensor next to fuel tank
- Interval - Every Year or 600 hours of operation

Fuel Filter (Gasoline) - GM Engine

- Lube Point(s) - Replaceable Element
- Interval - Every 6 months or 300 hours of operation

Downloaded from www.Manualslib.com manuals search engine

https://truckmanualshub.com/

Air Filter

- Lube Point(s) - Replaceable Element
- Interval - Every 6 months or 300 hours of operation or as indicated by the condition indicator

Electronic Pressure Regulator (LPG only)

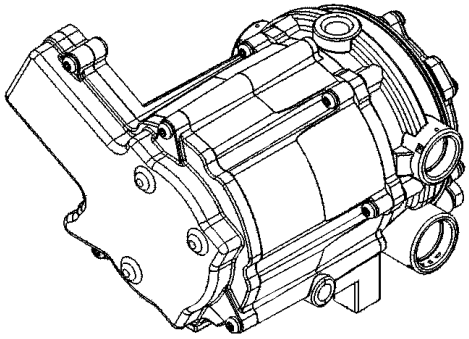

- Interval - 3 Months or 150 hours of operation
- Comments - Drain oil build up. Refer to Section 5.5, Draining Oil Build Up from the Propane Regulator

Fuel Filter (Propane) - GM

- Interval - 3 Months or 150 hours of operation
- Comments - Replace filter. Refer to Section 5.6, Propane Fuel Filter Replacement

Downloaded from www.Manualslib.com manuals search engine

https://truckmanualshub.com/

5.5 DRAINING OIL BUILD UP FROM THE PROPANE REGULATOR

During the course of normal operation, oils may build inside the primary and secondary chambers of the propane pressure regulator. These oils may be a result of poor fuel quality, contamination of the fuel supply chain, or regional variation in the make up of the fuel. If the build up of the oil is significant this can effect the operation of the fuel control system. Refer to Section 5.4, Operator Maintenance, for maintenance intervals. More frequent draining may be required if the fuel supply has been contaminated.

NOTICE

FOR BEST RESULTS WARM THE ENGINE TO OPERATING TEMPERATURE BEFORE DRAINING. THIS WILL ALLOW THE OILS TO FLOW FREELY FROM THE REGULATOR.

1. Move the equipment to a well ventilated area. Ensure there are no external ignition sources.
2. Start the engine and bring to operating temperature.
3. With the engine running, close the manual tank valve and run the engine out of fuel.

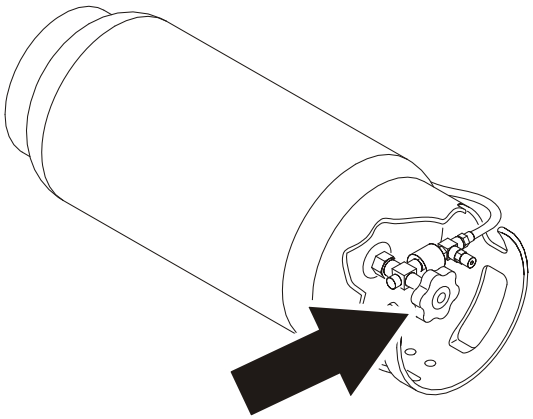

4. Push in the Emergency Switch once the engine stops.
5. Disconnect the electrical connection to the LPG fuel temperature sensor in the auxiliary fuel port of the EPR.

Downloaded from www.Manualslib.com manuals search engine

https://truckmanualshub.com/

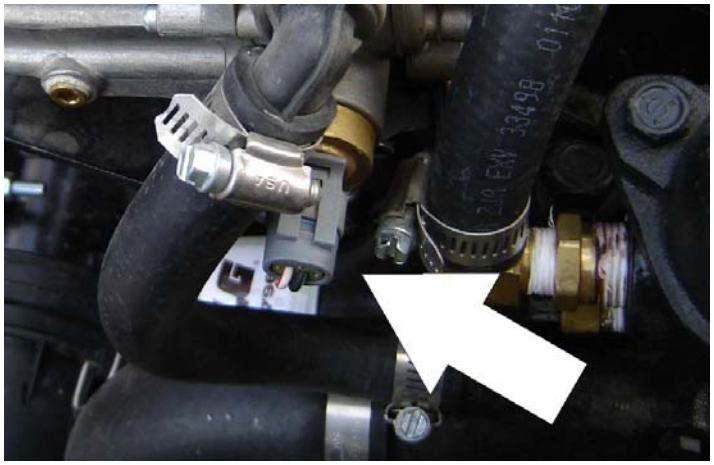

6. Remove the retainer clip for the LPG fuel temperature sensor and remove the sensor from the regulator body.

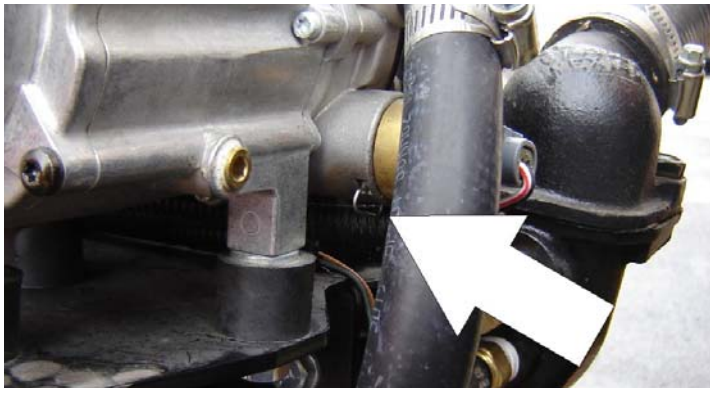

NOTE: *Have a small container ready to collect oil that will drain freely from the regulator at this point.*

7. Once all of the oil has been drained, reinstall the LPG fuel temperature sensor and reconnect the electrical connector.
8. Open the fuel tank manual valve.
9. Start the engine and verify all connections are secure.
10. Dispose of any drained oil per local regulations in a safe and proper fashion.

Downloaded from www.Manualslib.com manuals search engine

https://truckmanualshub.com/

5.6 PROPANE FUEL FILTER REPLACEMENT

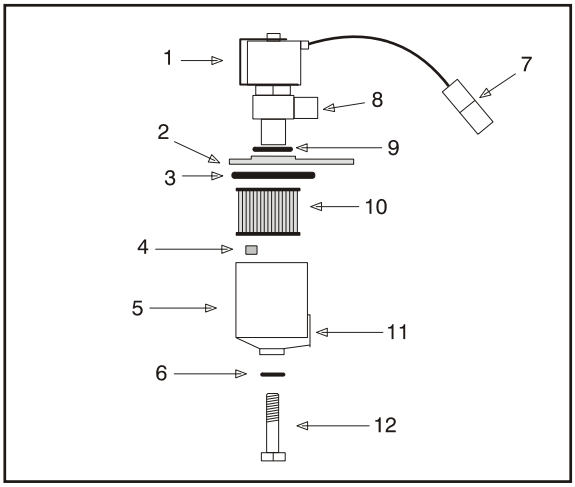

1. Electric Lock Off Solenoid
2. Mounting Plate
3. Housing Seal
4. Filter Magnet
5. Filter Housing
6. Seal
7. Electrical Connector
8. Fuel Outlet
9. O-ring
10. Filter
11. Fuel Inlet
12. Retaining Bolt

Figure 5-6. Filter Lock Assembly

Removal

1. Relieve the propane fuel system pressure. Refer to Section 5.7, Propane Fuel System Pressure Relief.
2. Disconnect the negative battery cable.
3. Slowly loosen the filter housing retaining bolt and remove it.
4. Pull the filter housing from the electric lock off assembly.
5. Locate filter magnet and remove it.
6. Remove the filter from the housing.
7. Remove and discard the housing seal.
8. Remove and discard the retaining bolt seal.
9. Remove and discard mounting plate to lock off o-ring seal

Installation

NOTICE

BE SURE TO REINSTALL THE FILTER MAGNET INTO THE HOUSING BEFORE INSTALLING NEW SEAL.

1. Install the mounting plate to lock off O-ring seal.

Downloaded from www.Manualslib.com manuals search engine

https://truckmanualshub.com/

2. Install the retaining bolt seal.
3. Install the housing seal.
4. Drop the magnet into the bottom of the filter housing.
5. Install the filter into the housing.
6. Install the retaining bolt into the filter housing.
7. Install the filter up to the bottom of the electric lock off.
8. Tighten the filter retaining bolt to 106 in-lbs (12 Nm).
9. Open manual shut-off valve. Start the vehicle and leak check the propane fuel system at each serviced fitting. Refer to Section 5.8, Propane Fuel System Leak Test.

5.7 PROPANE FUEL SYSTEM PRESSURE RELIEF

CAUTION

THE PROPANE FUEL SYSTEM OPERATES AT PRESSURES UP TO 312 PSI (21.5 BAR). TO MINIMIZE THE RISK OF FIRE AND PERSONAL INJURY, RELIEVE THE PROPANE FUEL SYSTEM PRESSURE (WHERE APPLICABLE) BEFORE SERVICING THE PROPANE FUEL SYSTEM COMPONENTS.

To relieve propane fuel system pressure:

1. Close the manual shut-off valve on the propane fuel tank.
2. Start and run the vehicle until the engine stalls.
3. Turn the ignition switch OFF.

CAUTION

RESIDUAL VAPOR PRESSURE WILL BE PRESENT IN THE FUEL SYSTEM. ENSURE THE WORK AREA IS WELL VENTILATED BEFORE DISCONNECTING ANY FUEL LINE.

Downloaded from www.Manualslib.com manuals search engine

https://truckmanualshub.com/

5.8 PROPANE FUEL SYSTEM LEAK TEST

CAUTION

NEVER USE AN OPEN FLAME OF ANY TYPE TO CHECK FOR PROPANE FUEL SYSTEM LEAKS.

Always inspect the propane fuel system for leaks after performing service. Check for leaks at the fittings of the serviced or replaced component. Use a commercially available liquid leak detector or an electronic leak detector. When using both methods, use the electronic leak detector first to avoid contamination by the liquid leak detector.

5.9 TIRES AND WHEELS

Tire Damage

For pneumatic tires, JLG Industries, Inc. recommends that when any cut, rip, or tear is discovered that exposes sidewall or tread area cords in the tire, measures must be taken to remove the JLG product from service immediately. Arrangements must be made for replacement of the tire or tire assembly.

For polyurethane foam filled tires, JLG Industries, Inc. recommends that when any of the following are discovered, measures must be taken to remove the JLG product from service immediately and arrangements must be made for replacement of the tire or tire assembly:

- A smooth, even cut through the cord plies which exceeds 3 in (7.5 cm) in total length.
- Any tears or rips (ragged edges) in the cord plies which exceeds 2.5cm (1 in) in any direction.
- Any punctures which exceed 2.5cm (1 in) in diameter.
- Any damage to the bead area cords of the tire.

If a tire is damaged but is within the above noted criteria, the tire must be inspected on a daily basis to ensure the damage has not propagated beyond the allowable criteria.

Downloaded from www.Manualslib.com manuals search engine

https://truckmanualshub.com/

Tire Replacement

JLG recommends a replacement tire be the same size, ply and brand as originally installed on the machine. Please refer to the JLG Parts Manual for the part number of the approved tires for a particular machine and model. If not using a JLG approved replacement tire, we recommend that replacement tires have the following characteristics:

- Equal or greater ply/load rating and size of original
- Tire tread contact width equal or greater than original
- Wheel diameter, width, and offset dimensions equal to the original.
- Approved for application by the tire manufacturer (Including inflation pressure and maximum tire load).

Unless specifically approved by JLG Industries Inc. do not replace a foam filled tire assembly with a pneumatic tire. When selecting and installing a replacement tire, ensure that all tires are inflated to the pressure recommended by JLG. Due to size variations between tire brands, both tires on the same axle should be the same.

Wheel Replacement

The rims installed on each product model have been designed for stability requirements which consist of track width, tire pressure, and load capacity. Size changes such as rim width, center piece location, larger or smaller diameter, etc., without written factory recommendations, may result in an unsafe condition regarding stability.

Wheel Installation

It is extremely important to apply and maintain proper wheel mounting torque.

⚠ WARNING

WHEEL NUTS MUST BE INSTALLED AND MAINTAINED AT THE PROPER TORQUE TO PREVENT LOOSE WHEELS, BROKEN STUDS, AND POSSIBLE DANGEROUS SEPARATION OF WHEEL FROM THE AXLE. BE SURE TO USE ONLY THE NUTS MATCHED TO THE CONE ANGLE OF THE WHEEL.

Tighten the lug nuts to the proper torque to prevent wheels from coming loose. Use a torque wrench to tighten the fasteners. If you do not have a torque wrench, tighten the fasteners with a lug wrench, then immediately have a service garage or dealer tighten the lug nuts to the proper torque. Over-tightening will result in breaking the studs or permanently deforming the mounting stud holes in the wheels. The proper procedure for attaching wheels is as follows:

Downloaded from www.Manualslib.com manuals search engine

https://truckmanualshub.com/

1. Start all nuts by hand to prevent cross threading. DO NOT use a lubricant on threads or nuts.
2. Tighten nuts in the following sequence:.

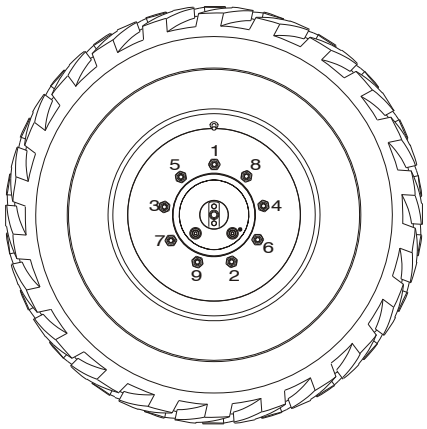

9 LUG PATTERN

3. The tightening of the nuts should be done in stages. Following the recommended sequence, tighten the nuts per wheel torque chart.

Wheel nuts should be torqued after the first 50 hours of operation and after each wheel removal. Check torque every 3 months or 150 hours of operation.

Table 5-11. Wheel Torque Chart

TORQUE SEQUENCE		
1st Stage	2nd Stage	3rd Stage
40-50 ft lbs (60-70 Nm)	90-105 ft lbs (125-150 Nm)	145-170 ft lbs (200-240 Nm)

Downloaded from www.Manualslib.com manuals search engine

https://truckmanualshub.com/

5.10 DECAL INSTALLATION

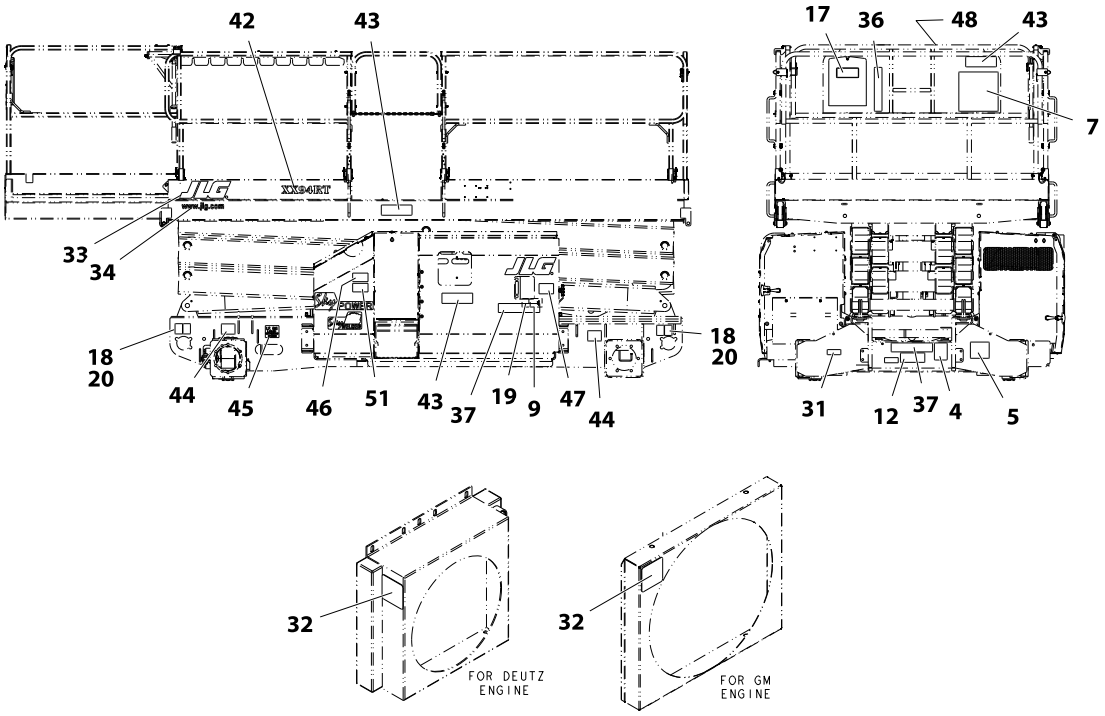

Figure 5-7. Decal Location - Sheet 1 of 2 (ANSI)

Downloaded from www.Manualslib.com manuals search engine

https://truckmanualshub.com/

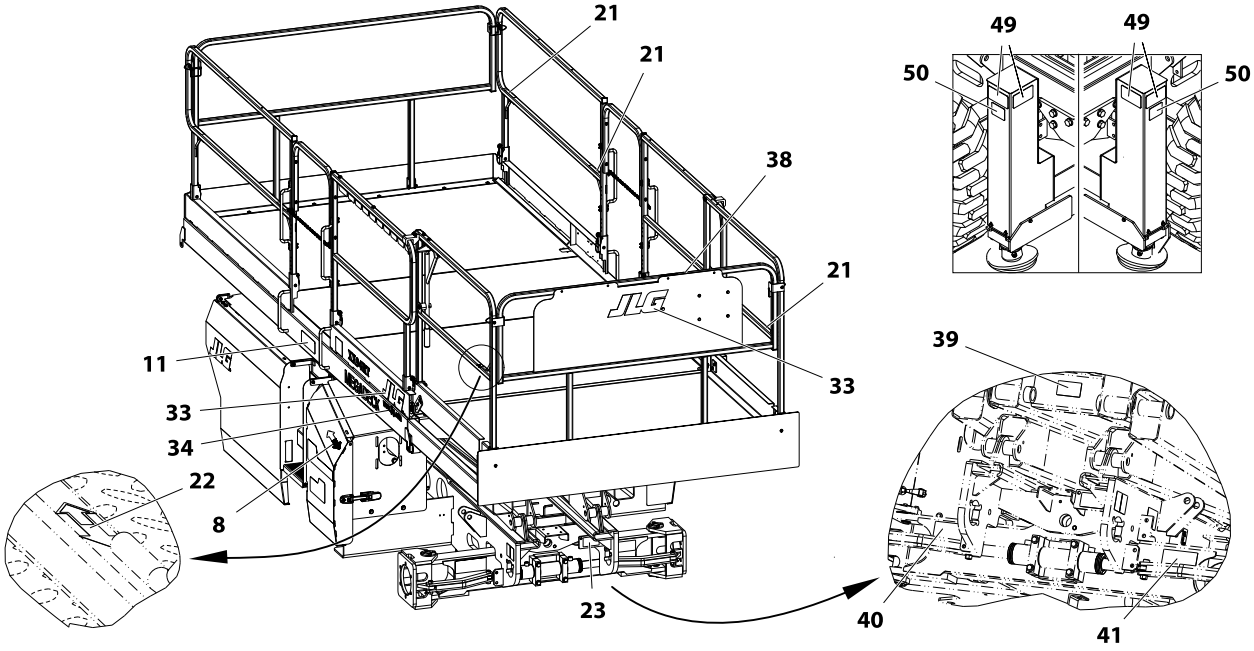

Figure 5-8. Decal Location - Sheet 2 of 2 (ANSI)

Downloaded from www.Manualslib.com manuals search engine

https://truckmanualshub.com/

Table 5-12. Decal Location Legend - ANSI

Item #	ANSI (0271752-5)	Eng/Chi (0275100-2)	CSA (0271755-4)	Eng/Spa (0271766-3)	Por/Spa (0271767-3)	Eng/Kor (1001162514)
1-3	--	--	--		--	
4	1700584	1700584	1700584	1700584	1700584	--
5	1702153	1704607	1704006	1704007	1704008	1702153
6	1702631	1702631	1702631	1702631	1702631	1702631
7	1703816	1705195	1704684	1704691	1704699	1001162115
8	1703687	1703687	1703687	1703687	1703687	1703687
9	1704412	1704412	1704412	1704412	1704412	1704412
10	--	--	--	--	--	
11	3251813	3251813	3251813	3251813	3251813	--
12	1001092250	1001092251	1001092250	1001092250	1001092250	1001092250
13-16	--	--	--	--	--	--
17	1701509	1701509	1701509	1701509	1701509	1701509
18	1703811	1703811	1703811	1703811	1703811	1703811
19	1703812	1703812	1703812	1703812	1703812	1703812
20	1703814	1703814	1703814	1703814	1703814	1703814
21	1704277	1704277	1704277	1704277	1704277	1704277
22	1703819	1703819	1703819	1703819	1703819	1703819

Downloaded from www.Manualslib.com manuals search engine

https://truckmanualshub.com/

Table 5-12. Decal Location Legend - ANSI

Item #	ANSI (0271752-5)	Eng/Chi (0275100-2)	CSA (0271755-4)	Eng/Spa (0271766-3)	Por/Spa (0271767-3)	Eng/Kor (1001162514)
23	1703822	1703822	1703822	1703822	1703822	1703822
24-30	--	--	--	--	--	--
31	--	--	1705303	--	--	--
32	1703162	1703162	1703162	1703162	1703162	1703162
33	1702773	1702773	1702773	1702773	1702773	1702773
34	1704885	1704885	1704885	1704885	1704885	1704885
35	--	--	--	--	--	--
36	1705190	1705190	1705314	1705315	1705317	1001162110
37	1703818	1705193	1704686	1704693	1704701	1001162111
38	1703821	1705194	1704687	1704694	1704702	1001162112
39	1705019	1705019	1705019	1705019	1705019	1705019
40	1704432	1705943	1705311	1705316	1705318	1001162113
41	1703823	1705944	1705040	1705041	1705043	1001162114
42 3394RT 4394RT	 1705038 1705039	 1705038 1705039	 1705038 1705039	 1705038 1705039	 1705038 1705039	 1705038 1705039

Downloaded from www.Manualslib.com manuals search engine

https://truckmanualshub.com/

Table 5-12. Decal Location Legend - ANSI

Item #	ANSI (0271752-5)	Eng/Chi (0275100-2)	CSA (0271755-4)	Eng/Spa (0271766-3)	Por/Spa (0271767-3)	Eng/Kor (1001162514)
43 3394RT 4394RT	1705020 1702757 1705021 1705022	1705020 1702757 1705021 1705022	1705020 1702757 1705021 1705022	1705020 1702757 1705021 1705022	1705020 1702757 1705021 1705022	1705020 1702757 1705021 1705022
44	1703493	1703493	1703493	1703493	1703493	1703493
45	1700818	1700818	1704271	1700818	1702720	1700818
46	1701542 1701505	1701542 1701505	1701542 1701505	1701542 1701505	1701542 1701505	1701542 1701505
47	1702788 1704174	--	1702788 1704174	--	--	--
48	1702962 1702961	--	1702962 1702961	--	--	--
49	1701214	1701214	1704690 1701214	1704697	1704698	1701214
50	1705042	1705042	1705042	1705042	1705042	1705042
51	1001108923	--	1001108923	--	--	1001108923

Downloaded from www.Manualslib.com manuals search engine

https://truckmanualshub.com/

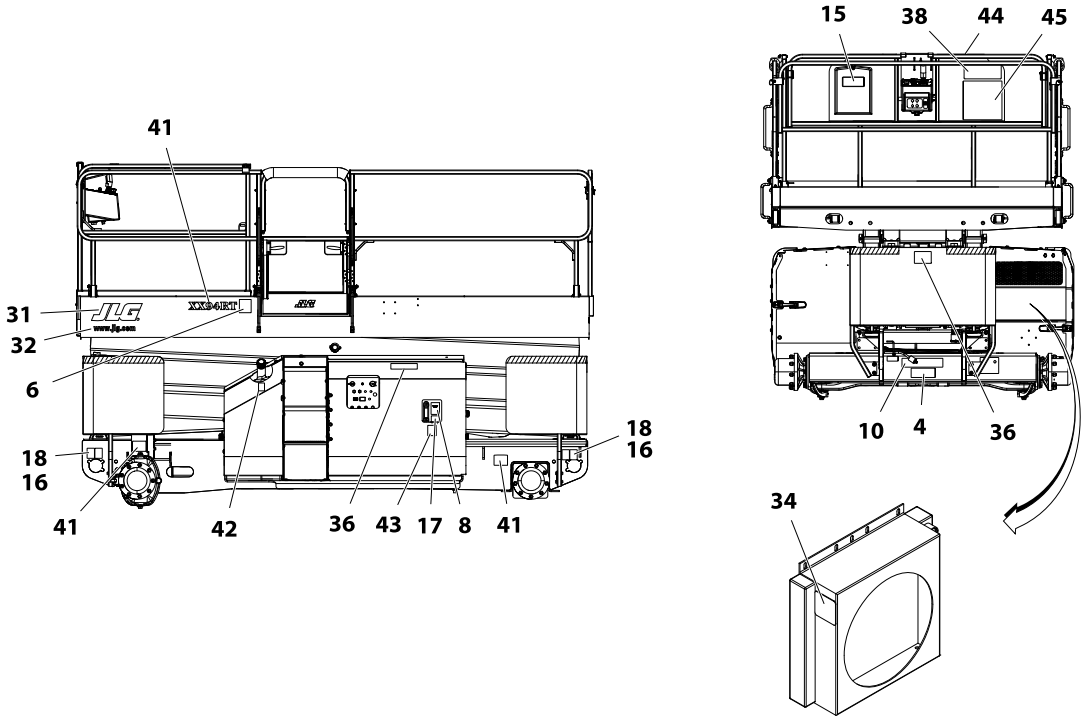

Figure 5-9. Decal Installation - Sheet 1 of 2 (CE/AUS)

Downloaded from www.Manualslib.com manuals search engine

https://truckmanualshub.com/

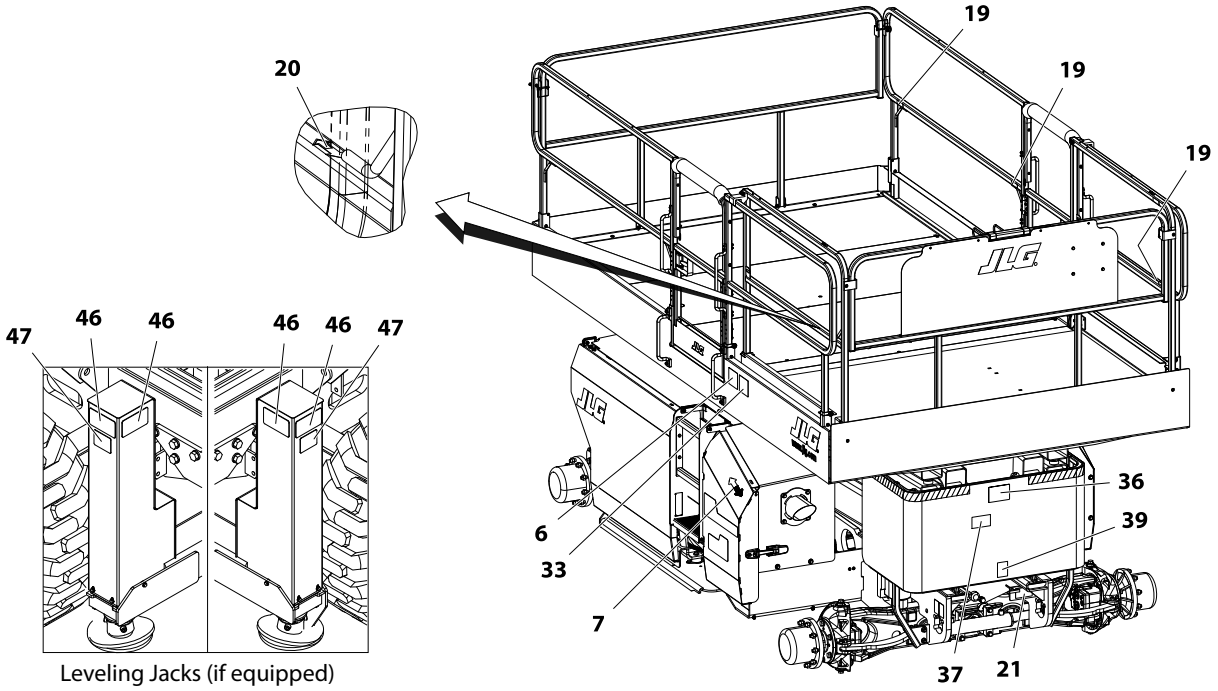

Figure 5-10. Decal Installation - Sheet 2 of 2 (CE/AUS)

Downloaded from www.Manualslib.com manuals search engine

https://truckmanualshub.com/

Table 5-13. Decal Legend - CE/AUS

Item #	CE/AUS (0275086-2)
1 - 3	--
4	1700584
5	1702631
6	1705515
7	1703687
8	1704412
9	--
10 CE AUS	 3252533 3252534
11-14	--
15	1701509
16	1703811
17	1703812
18	1703814
19	1704277
20	1703819

Table 5-13. Decal Legend - CE/AUS

Item #	CE/AUS (0275086-2)
21	1703822
22 - 30	--
31	1702773
32	1704885
33	3251813
34	1703162
35	--
36	1706338
37	1705019
38	1705671
39	1705372
40 3394RT 4394RT	 1705038 1705039
41	1703493
42	1701505

Downloaded from www.Manualslib.com manuals search engine

https://truckmanualshub.com/

Table 5-13. Decal Legend - CE/AUS

Item #	CE/AUS (0275086-2)
43	1702788 1703479 1704174 1704175
44	1702962
45 3394RT 4394RT	 1705034 1705035 1705036 1705037
46	1701785
47	1705042

Downloaded from www.Manualslib.com manuals search engine

https://truckmanualshub.com/

SECTION 6. INSPECTION AND REPAIR LOG

Table 6-1. Inspection and Repair Log

Date	Comments

Downloaded from www.Manualslib.com manuals search engine

https://truckmanualshub.com/

Table 6-1. Inspection and Repair Log

Date	Comments

Downloaded from www.Manualslib.com manuals search engine

Downloaded from www.Manualslib.com manuals search engine

https://truckmanualshub.com/

An Oshkosh Corporation Company

TRANSFER OF OWNERSHIP

To Product Owner:

If you now own but ARE NOT the original purchaser of the product covered by this manual, we would like to know who you are. For the purpose of receiving safety-related bulletins, it is very important to keep JLG Industries, Inc. updated with the current ownership of all JLG products. JLG maintains owner information for each JLG product and uses this information in cases where owner notification is necessary.

Please use this form to provide JLG with updated information with regard to the current ownership of JLG products. Please return completed form to the JLG Product Safety & Reliability Department via facsimile or mail to address as specified below.

Thank You,
Product Safety & Reliability Department
JLG Industries, Inc.
13224 Fountainhead Plaza
Hagerstown, MD 21742
USA
Telephone: +1-717-485-6591
Fax: +1-301-745-3713

NOTE: Leased or rented units should not be included on this form.

Mfg. Model: _____

Serial Number: _____

Previous Owner: _____

Address: _____

_____

Country: _____ **Telephone: (_____)** _____

Date of Transfer: _____

Current Owner: _____

Address: _____

_____

Country: _____ **Telephone: (_____)** _____

Who in your organization should we notify?

Name: _____

Title:_____

https://truckmanualshub.com/

Downloaded from www.Manualslib.com manuals search engine

https://truckmanualshub.com/

PROPOSITION 65 WARNING

- Battery posts, terminals and related accessories contain lead and lead compounds, chemicals known to the State of California to cause cancer and reproductive harm.
- Batteries also contain other chemicals known to the State of California to cause cancer.
- Wash hands after handling.

WARNING:

The engine exhaust from this product contains chemicals known to the State of California to cause cancer, birth defects, or other reproductive harm.

1702961

Downloaded from www.Manualslib.com manuals search engine

https://truckmanualshub.com/

An Oshkosh Corporation Company

Corporate Office
JLG Industries, Inc.
1 JLG Drive
McConnellsburg PA. 17233-9533
USA
(717) 485-5161
(717) 485-6417

3121641

JLG Worldwide Locations

JLG Industries (Australia)
P.O. Box 5119
11 Bolwarra Road
Port Macquarie
N.S.W. 2444
Australia
+61 2 65 811111
+61 2 65 810122

JLG Latino Americana Ltda.
Rua Eng. Carlos Stevenson,
80-Suite 71
13092-310 Campinas-SP
Brazil
+55 19 3295 0407
+55 19 3295 1025

JLG Industries (UK) Ltd
Bentley House
Bentley Avenue
Middleton
Greater Manchester
M24 2GP - England
+44 (0)161 654 1000
+44 (0)161 654 1001

JLG France SAS
Z.I. de Baulieu
47400 Fauillet
France
+33 (0)5 53 88 31 70
+33 (0)5 53 88 31 79

JLG Deutschland GmbH
Max-Planck-Str. 21
D - 27721 Ritterhude - Ihlpohl
Germany
+49 (0)421 69 350 20
+49 (0)421 69 350 45

JLG Equipment Services Ltd.
Rm 1107 Landmark North
39 Lung Sum Avenue
Sheung Shui N. T.
Hong Kong
(852) 2639 5783
(852) 2639 5797

JLG Industries (Italia) s.r.l.
Via Po. 22
20010 Pregnana Milanese - MI
Italy
+39 029 359 5210
+39 029 359 5845

Oshkosh - JLG Singapore T. E. P. Ltd.
29 Tuas Ave 4
Jurong Industrial Estate
639379
Singapore
+65-6591-9030
+65-6591-9031

JLG Polska
Ul. Krolewska
00-060 Warsawa
Poland
+48 (0)914 320 245
+48 (0)914 358 200

JLG Industries (Scotland)
Wright Business Centre
1 Lonmay Road
Queenslie, Glasgow G33 4EL
Scotland
+44 (0)141 781 6700
+44 (0)141 773 1907

Plataformas Elevadoras
JLG Iberica, S.L.
Trapadella, 2
P.I. Castellbisbal Sur
08755 Castellbisbal, Barcelona
Spain
+34 93 772 4700
+34 93 771 1762

JLG Sverige AB
Enkopingsvagen 150
Box 704
SE - 176 27 Jarfalla
Sweden
+46 (0)850 659 500
+46 (0)850 659 534

www.jlg.com

Downloaded from www.Manualslib.com manuals search engine