https://truckmanualshub.com/

Table Contents

SH330/330LC/350HD-3B Shop Manual

Book No.WLSM3303B-00W

About This Shop Manual

		Page
Safety	000-0-02-00-05	1
Introduction	000-0-03-00-05	2
Using Technical Information	000-0-04-00-05	3
Precautions for Use	000-0-05-00-10	4
Tightening Torque	000-0-06-00-06	22
Numerical Conversion Table	000-0-07-00-06	23

Specifications

Major Equipment Specifications		
Equipment Configuration	300-2-01-00-05	26
Lower Mechanism	330-2-01-01-49	28
Upper Mechanism	330-2-01-02-43	32
Engine and Related Areas	330-2-01-03-48	33
Hydraulic System	330-2-01-04-49	36
Controls	330-2-01-05-50	39
Backhoe Attachments	330-2-01-06-51	41
Fuel / Lubricants and Filters	330-2-02-00-39	43

Performances

Lifting Capacity	330-3-03-00-44	52
Lifting Position	330-3-03-01-03	61
Hydraulic Pump Control Curve	330-3-01-04-03	62

https://truckmanualshub.com/

Table Contents

Disassembling and Maintenance Instructions for Main Body

		Page
Maintenance Instructions		
Process Block Diagram for Lower Equipment	000-5-05-00-03	63
Tightening Torque for Major Parts	330-5-05-01-21	64
Lower Mechanism		
Track Shoe	000-5-01-01-02	68
Travel Unit	330-5-01-02-09	72
Recoil Spring Assembly	330-5-01-03-08	75
Upper Roller	000-5-01-04-04	78
Lower Roller	000-5-01-05-04	80
Rotating Joint	330-5-01-06-07	82
Upper Mechanism		
Swing Unit	300-5-02-01-19	84
Engine	330-5-02-02-24	86
Hydraulic Pump	330-5-02-03-21	87
Control Valve	300-5-02-04-14	88
Remote Control Valve	000-5-02-05-09	89
Operator's Cab	000-5-02-06-06	90
Attachments	700-5-03-00-22	91

https://truckmanualshub.com/

Table Contents

Disassembling and Maintenance Instructions for Major Parts

		Page
Take-up Roller		
Disassembling and Assembling Instructions	000-6-02-00-26	106
Assembly Drawings	300-6-02-01-08	112
Upper Roller		
Disassembling and Assembling Instructions	000-6-03-00-24	113
Assembly Drawings	300-6-03-01-08	120
Lower Roller		
Disassembling and Assembling Instructions	000-6-04-00-21	121
Assembly Drawings	300-6-04-01-07	127
Grease Cylinder		
Disassembling and Assembling Instructions	000-6-05-00-23	128
Assembly Drawings	300-6-05-01-08	132
Rotating Joint		
Disassembling and Assembling Instructions	000-6-06-00-27	133
Assembly Drawings	330-6-06-01-11	140
Air Conditioner		
Disassembling and Assembling Instructions	000-6-08-00-05	141
Maintenance Standards		
Check Sheets	330-6-10-00-12	148
Maintenance Standards Value Table	330-6-10-01-20	160
List of Shims for Adjusting Attachment Gaps	000-6-10-02-02	163
Inspection Gauges	300-6-10-03-08	168

https://truckmanualshub.com/

Table Contents

Disassembling and Maintenance Instructions for Major Hydraulic Components

		Page
Hydraulic Pump		
Hydraulic Pump Maintenance	330-7-01-01-53	170
Gear Pump Handling	330-7-01-01-54	186
Regulator Handling	330-7-01-01-55	188
Regulator Maintenance	330-7-01-01-56	197
Travel Unit		
Motor	330-7-02-02-37	205
Reduction Gears (Unit)	330-7-02-03-06	225
Swing Unit		
Motor Maintenance	330-7-03-02-33	242
Reduction Gears Maintenance	290-7-03-03-28	268
Control Valve	330-7-04-01-14	278
Cylinder		
Structural Drawings	330-7-05-01-37	310
Maintenance Instructions	330-7-05-02-20	313
Remote Control Valve		
For Operation Use	000-7-06-01-15	336
For Travel Use	000-7-06-02-17	358
Solenoid Valve	000-7-07-01-14	362
Cushion Valve	000-7-08-01-08	369

Instructions for Repair

Attachment Reinforcement Procedures	330-8-03-02-20	373
Platform Plate for Repair	330-8-07-01-03	378

https://truckmanualshub.com/

Lifting Capacity

Precautions for lifting loads with the hydraulic excavator

Discuss the procedures in advance

1. Operators and those who handle rigging must be trained for those specific purposes.
2. Use a sling that is sturdy enough. Also, use a device designed to prevent loads from falling.

Take measures to ensure safe operation

[1] Specify signals to be used for lifting loads and designate a signal person for the entire course of operation.

[2] Work on a level surface. (Working on a slope can cause the machine to overturn and fall.)

[3] If you are on a slope, level out the footing before starting to work.

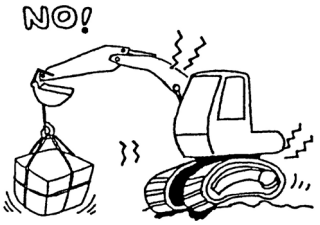

[4] Do not allow anyone to be under the suspended load or at other dangerous areas.

[5] Do not lift a load exceeding the rated capacity. (The machine can overturn and jeopardize the safety of workers.)

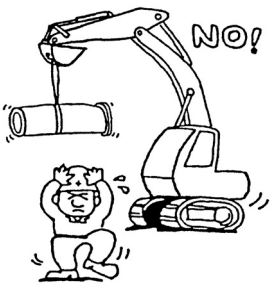

[6] The wire ropes and the chains for rigging must be sturdy enough and be free of disfigurement and corrosion.

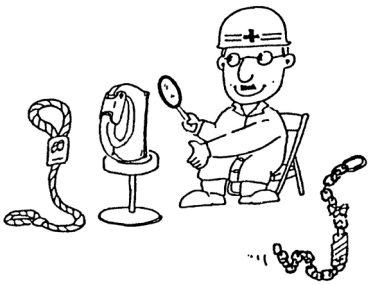

Use wire ropes with safety factor 6 or greater.
Use lifting chains with safety factor 5 or greater.

Caution

[1] The operators must be trained specifically.
[2] The weight of the loads and the rigging equipment combined must not exceed the maximum load value.
[3] During the crane operations, lower the engine speed (mode L) and keep working at low engine speed.
[4] Be extra careful while carrying out the swing operations. Move the machine slowly.
[5] Do not leave the cab while you are suspending a load.
[6] Do not travel any distance while you are suspending a load.
[7] Sling the load in such a manner that the wire rope and the ring do not get detached from the hook.
[8] If the bucket hook, or the rigging equipment gets damaged during operation, stop the procedure and make necessary repairs.
[9] Please contact our authorized service shops when you wish to have hooks attached to your bucket.

https://truckmanualshub.com/

Lifting Capacities (Standard Arm)

Type of machine:	SH330-3B	L:	3.25 m Arm length
Arm:	Standard arm	R:	Reach from swing center
Shoe:	600 Grouser shoe	H:	Bucket hook height
Bucket:	1.40 m^3	W:	Lifting capacity

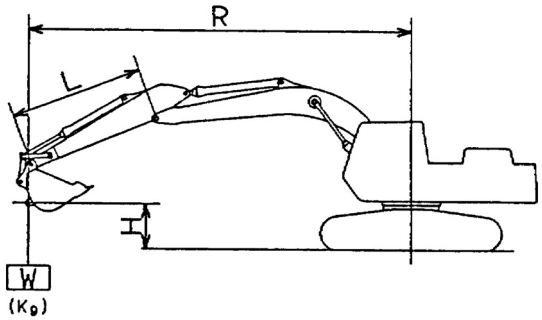

We: Frontal rating load

Ws: Lateral rating load

MAX: Rating load at height point H and at maximum working reach

(Maximum working reach: 9.67 m) (Units: kg)

H \ R		Max. W	Max. R(m)	9 m	8 m	7 m	6 m	5 m	4 m	3 m	2 m
7 m	We	4870 *	8.24		5850 *						
	Ws	4870 *	8.24		5540						
6 m	We	4550 *	8.83		7380 *						
	Ws	4490	8.83		5460						
5 m	We	4600 *	9.21	5760 *	7630	8110 *					
	Ws	4050	9.21	4250	5330	6770					
4 m	We	4720 *	9.48	6050	7440	8770 *	9750 *	11240 *			
	Ws	3750	9.48	4150	5160	6510	8420	11240 *			
3 m	We	4920 *	9.63	5920	7240	9050	10850 *	12980 *	16720 *	13730 *	
	Ws	3550	9.63	4030	4970	6230	7980	10640	15150	13730 *	
2 m	We	5120	9.67	5790	7040	8750	11220	14570 *	19240 *	7170 *	
	Ws	3430	9.67	3910	4790	5950	7570	9990	14040	7170 *	
1 m	We	5090	9.62	5680	6860	8490	10840	14590	20310 *	8020 *	
	Ws	3390	9.62	3800	4620	5710	7230	9500	13350	8020 *	
0	We	5170	9.45	5580	6720	8280	10560	14210	19920 *	10610 *	
	Ws	3430	9.45	3710	4490	5520	6970	9170	12990	10610 *	
-1 m	We	5380	9.17	5530	6620	8140	10380	14000	21030	13740 *	10010 *
	Ws	3560	9.17	3660	4400	5400	6810	8990	12850	13740 *	10010 *
-2 m	We	5740	8.77		6580	8070	10290	13930	20600 *	17320 *	13460 *
	Ws	3800	8.77		4360	5330	6730	8920	12840	17320 *	13460 *
-3 m	We	6350	8.22		6610	8080	10290	13960	19460 *	21470 *	17080 *
	Ws	4220	8.22		4380	5340	6740	8950	12930	21470 *	17080 *
-4 m	We	7380	7.50			8170	10390	14090	17740 *	22190 *	21110 *
	Ws	4910	7.50			5420	6820	9070	13120	22190 *	21110 *
-5 m	We	9070 *	6.55				10290 *	12550 *	15240 *	18720 *	
	Ws	6180	6.55				7020	9290	13430	18720 *	
-6 m	We	8730 *	5.24					9280 *	11480 *		
	Ws	8730 *	5.24					9280 *	11480 *		

*Hydraulic pressure factor: 87.0%. Without asterisk: Stability factor: 75.0%

https://truckmanualshub.com/

Lifting Capacities (Short Arm)

Type of machine:	SH330-3B	L:	2.63 m Arm length
Arm:	Short arm	R:	Reach from swing center
Shoe:	600 Grouser shoe	H:	Bucket hook height
Bucket:	1.60 m^3	W:	Lifting capacity

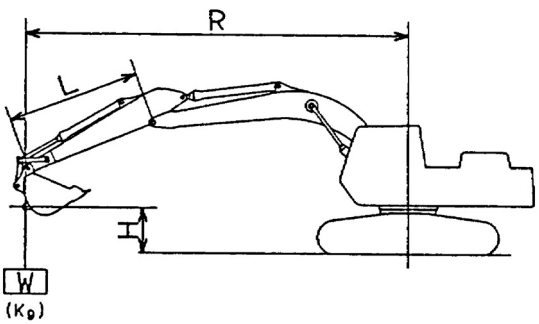

We: Frontal rating load

Ws: Lateral rating load

MAX: Rating load at height point H and at maximum working reach

(Maximum working reach: 9.18 m) (Units: kg)

H \ R		Max. W	Max. R(m)	9 m	8 m	7 m	6 m	5 m	4 m	3 m	2 m
7 m	We	7890 *	7.51			8100 *					
	Ws	6080	7.51			6960					
6 m	We	6620 *	8.28		7620	8340 *					
	Ws	4970	8.28		5320	6830					
5 m	We	6450	8.69		7500	8790 *	9600 *				
	Ws	4440	8.69		5220	6620	8600				
4 m	We	5990	8.97		7340	9200	10560 *	12390 *	15600 *		
	Ws	4090	8.97		5060	6360	8190	10960	15600 *		
3 m	We	5710	9.13	5860	7150	8900	11430	14020 *	18480 *		
	Ws	3860	9.13	3970	4890	6090	7760	10250	14340		
2 m	We	5560	9.18	5750	6970	8620	11000	14770	16530 *		
	Ws	3730	9.18	3870	4720	5830	7370	9650	13390		
1 m	We	5540	9.12	5660	6810	8390	10670	14290	15370 *		
	Ws	3700	9.12	3780	4570	5620	7070	9240	12940		
0 m	We	5650	8.95		6700	8220	10440	14020	17740 *		
	Ws	3760	8.95		4470	5460	6870	9000	12780		
-1 m	We	5910	8.65		6640	8120	10320	13910	20630 *	13400 *	
	Ws	3930	8.65		4410	5370	6750	8900	12760	13400 *	
-2 m	We	6390	8.22		6640	8100	10290	13910	19640 *	18570 *	14600 *
	Ws	4250	8.22		4410	5350	6730	8900	12840	18570 *	14600 *
-3 m	We	7200	7.64			8160	10360	14020	18170 *	22210 *	19560 *
	Ws	4800	7.64			5410	6790	9000	13010	22210 *	19560 *
-4 m	We	8610	6.85				10530	13380 *	16060 *	19360 *	
	Ws	5750	6.85				6950	9190	13280	19360 *	
-5 m	We	8960 *	5.80					10770 *	12980 *	15350 *	
	Ws	7640	5.80					9520	12980 *	15350 *	

*Hydraulic pressure factor: 87.0%. Without asterisk: Stability factor: 75.0%

https://truckmanualshub.com/

Lifting Capacities (Long Arm)

Type of machine:	SH330-3B	L:	4.04 m Arm length
Arm:	Long arm	R:	Reach from swing center
Shoe:	600 Grouser shoe	H:	Bucket hook height
Bucket:	1.15 m^3	W:	Lifting capacity

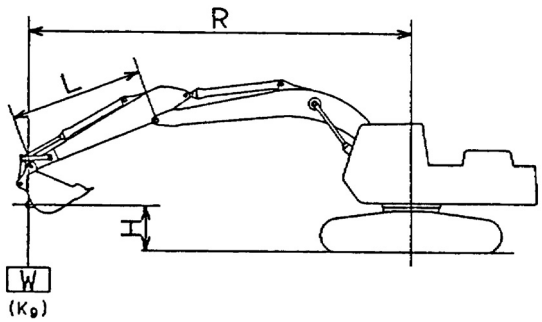

We: Frontal rating load

Ws: Lateral rating load

MAX: Rating load at height point H and at maximum working reach

(Maximum working reach: 10.43 m) (Units: kg)

H \ R		Max. W	Max. R(m)	10 m	9 m	8 m	7 m	6 m	5 m	4 m	3 m	2 m
7 m	We	3620 *	9.15		4150 *							
	Ws	3620 *	9.15		4150 *							
6 m	We	3510 *	9.65		5500 *	6500 *						
	Ws	3510 *	9.65		4450	5630						
5 m	We	3530 *	10.00	3550 *	6270	6850 *						
	Ws	3480	10.00	3480	4350	5470						
4 m	We	3610 *	10.25	4690 *	6140	7310 *	7820 *					
	Ws	3230	10.25	3410	4220	5270	6680					
3 m	We	3740 *	10.39	4940	5980	7340	8600 *	9690 *	11340 *			
	Ws	3060	10.39	3310	4070	5050	6360	8220	11070			
2 m	We	3920 *	10.43	4830	5820	7100	8860	10850 *	13120 *	17010 *	15260 *	
	Ws	2950	10.43	3210	3920	4830	6040	7740	10300	14650	15260 *	
1 m	We	4180 *	10.37	4730	5660	6880	8540	10950	14620 *	19200 *	11170 *	
	Ws	2910	10.37	3120	3780	4620	5750	7310	9660	13640	11170 *	
0 m	We	4490	10.22	4650	5530	6690	8270	10570	14260	20500 *	11510 *	6700 *
	Ws	2920	10.22	3040	3650	4450	5500	6970	9190	13000	11510 *	6700 *
-1 m	We	4630	9.96		5430	6540	8070	10300	13910	20830	13230 *	9120 *
	Ws	3010	9.96		3560	4310	5320	6730	8880	12660	13230 *	9120 *
-2 m	We	4880	9.59		5380	6450	7940	10140	13720	20650	15660 *	11690 *
	Ws	3180	9.59		3510	4230	5200	6580	8720	12510	15660 *	11690 *
-3 m	We	5300	9.10		5380	6420	7890	10070	13660	20260 *	18670 *	14480 *
	Ws	3460	9.10		3510	4200	5150	6520	8670	12510	18670 *	14480 *
-4 m	We	5960	8.46			6460	7910	10100	13720	19060 *	22350 *	17610 *
	Ws	3910	8.46			4240	5170	6540	8720	12620	21570	17610 *
-5 m	We	7070	7.63				8030	10230	13890	17210 *	21900 *	21220 *
	Ws	4670	7.63				5280	6660	8860	12850	21900 *	21220 *
-6 m	We	8400 *	6.54					9570 *	11790 *	14460 *	18070 *	23970 *
	Ws	6080	6.54					6890	9130	13220	18070 *	23970 *

*Hydraulic pressure factor: 87.0%. Without asterisk: Stability factor: 75.0%

https://truckmanualshub.com/

Lifting Capacities (Standard Arm)

Type of machine:	SH330LC-3B	L:	3.25 m Arm length
Arm:	Standard arm	R:	Reach from swing center
Shoe:	600 Grouser shoe	H:	Bucket hook height
Bucket:	1.40 m^3	W:	Lifting capacity

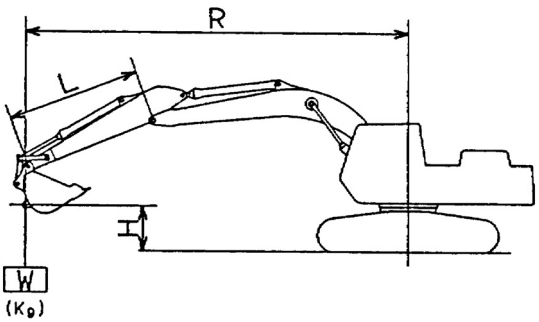

We: Frontal rating load

Ws: Lateral rating load

MAX: Rating load at height point H and at maximum working reach

(Maximum working reach: 9.67 m) (Units: kg)

H \ R		Max. W	Max. R(m)	9 m	8 m	7 m	6 m	5 m	4 m	3 m
7 m	We	4870 *	8.24		5850 *					
	Ws	4870 *	8.24		5630					
6 m	We	4550 *	8.83		7380 *					
	Ws	4550 *	8.83		5560					
5 m	We	4600 *	9.21	5760 *	7680 *	8110 *				
	Ws	4130	9.21	4330	5420	6880				
4 m	We	4720 *	9.48	6890	8090 *	8770 *	9750 *	11240 *		
	Ws	3820	9.48	4230	5260	6620	8550	11240 *		
3 m	We	4920 *	9.63	6760	8250	9490 *	10850 *	12980 *	16720 *	13730 *
	Ws	3620	9.63	4110	5070	6340	8120	10810	15380	13730 *
2 m	We	5210 *	9.67	6630	8050	10010	11900 *	14570 *	19240 *	7170 *
	Ws	3500	9.67	3990	4880	6060	7710	10160	14280	7170 *
1 m	We	5610 *	9.62	6510	7870	9740	12500	15770 *	20310 *	8020 *
	Ws	3460	9.62	3880	4710	5820	7360	9670	13580	8020 *
0 m	We	5940	9.45	6410	7720	9530	12210	16480 *	19920 *	10610 *
	Ws	3500	9.45	3790	4580	5630	7110	9340	13230	10610 *
-1 m	We	6180	9.17	6360	7620	9380	12020	16390	21230 *	13740 *
	Ws	3640	9.17	3740	4490	5500	6940	9160	13090	13740 *
-2 m	We	6600	8.77		7570	9310	11930	16310	20600 *	17320 *
	Ws	3890	8.77		4450	5440	6870	9090	13080	17320 *
-3 m	We	7300	8.22		7600	9320	11940	15760 *	19460 *	21470 *
	Ws	4310	8.22		4480	5450	6870	9120	13170	21470 *
-4 m	We	8480	7.50			9420	12040	14530 *	17740 *	22190 *
	Ws	5010	7.50			5530	6960	9240	13360	22190 *
-5 m	We	9070 *	6.55				10290 *	12550 *	15240 *	18720 *
	Ws	6290	6.55				7150	9460	13670	18720 *
-6 m	We	8730 *	5.24					9280 *	11480 *	
	Ws	8730 *	5.24					9280 *	11480 *	

*Hydraulic pressure factor: 87.0%. Without asterisk: Stability factor: 75.0%

https://truckmanualshub.com/

Lifting Capacities (Short Arm)

Type of machine:	SH330LC-3B	L:	2.63 m Arm length
Arm:	Short arm	R:	Reach from swing center
Shoe:	600 Grouser shoe	H:	Bucket hook height
Bucket:	1.60 m^3	W:	Lifting capacity

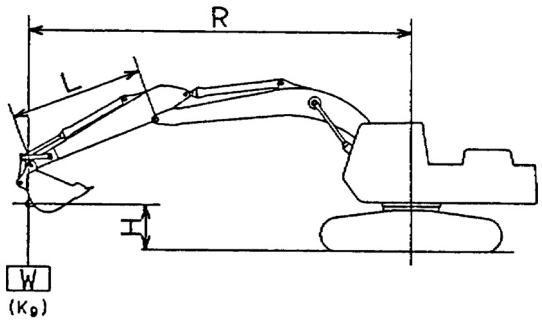

We: Frontal rating load

Ws: Lateral rating load

MAX: Rating load at height point H and at maximum working reach

(Maximum working reach: 9.18 m) (Units: kg)

H \ R		Max. W	Max. R(m)	9 m	8 m	7 m	6 m	5 m	4 m	3 m
7 m	We	7890 *	7.51			8100 *				
	Ws	6180	7.51			7070				
6 m	We	6620 *	8.28		8050 *	8340 *				
	Ws	5060	8.28		5420	6940				
5 m	We	6690 *	8.69		8260 *	8790 *	9600 *			
	Ws	4530	8.69		5310	6730	8740			
4 m	We	6830	8.97		8350	9390 *	10560 *	12390 *	15600 *	
	Ws	4170	8.97		5150	6470	8320	11130	15600 *	
3 m	We	6520	9.13	6690	8160	10030 *	11570 *	14020 *	18480 *	
	Ws	3940	9.13	4050	4980	6200	7900	10420	14570	
2 m	We	6370	9.18	6580	7970	9880	12480 *	15390 *	16530 *	
	Ws	3810	9.18	3950	4810	5940	7510	9820	13630	
1 m	We	6350	9.12	6490	7810	9640	12320	16280 *	15370 *	
	Ws	3780	9.12	3860	4670	5730	7200	9410	13180	
0 m	We	6490	8.95		7690	9460	12090	16410	17740 *	
	Ws	3840	8.95		4560	5570	7000	9170	13010	
-1 m	We	6790	8.65		7630	9360	11960	16290	20630 *	13400 *
	Ws	4020	8.65		4500	5480	6890	9070	13000	13400 *
-2 m	We	7340	8.22		7640	9340	11930	16010 *	19640 *	18570 *
	Ws	4340	8.22		4510	5460	6860	9070	13080	18570 *
-3 m	We	8270	7.64			9410	12000	15000 *	18170 *	22210 *
	Ws	4900	7.64			5520	6920	9170	13250	22210 *
-4 m	We	9250 *	6.85				11110 *	13380 *	16060 *	19360 *
	Ws	5860	6.85				7080	9360	13520	19360 *
-5 m	We	8960 *	5.80					10770 *	12980 *	15350 *
	Ws	7780	5.80					9690	12980 *	15350 *

*Hydraulic pressure factor: 87.0%. Without asterisk: Stability factor: 75.0%

https://truckmanualshub.com/

Lifting Capacities (Long Arm)

Type of machine:	SH330LC-3B	L:	4.04 m Arm length
Arm:	Long arm	R:	Reach from swing center
Shoe:	600 Grouser shoe	H:	Bucket hook height
Bucket:	1.15 m^3	W:	Lifting capacity

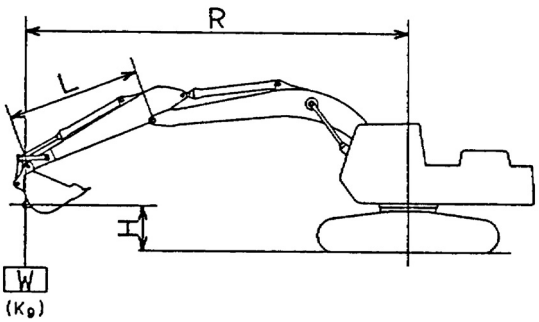

We: Frontal rating load

Ws: Lateral rating load

MAX: Rating load at height point H and at maximum working reach

(Maximum working reach: 10.43 m) (Units: kg)

H \ R		Max. W	Max. R(m)	10 m	9 m	8 m	7 m	6 m	5 m	4 m	3 m
7 m	We	3620 *	9.15		4150 *						
	Ws	3620 *	9.15		4150 *						
6 m	We	3510 *	9.65		5500 *	6500 *					
	Ws	3510 *	9.65		4530	5720					
5 m	We	3530 *	10.00	3550 *	6480 *	6850 *					
	Ws	3530 *	10.00	3550 *	4430	5560					
4 m	We	3610 *	10.25	4690 *	6940 *	7310 *	7820 *				
	Ws	3300	10.25	3480	4300	5360	6790				
3 m	We	3740 *	10.39	5480 *	6820	7840 *	8600 *	9690 *	11340 *		
	Ws	3130	10.39	3380	4150	5140	6470	8350	11240		
2 m	We	3920 *	10.43	5550	6650	8110	9390 *	10850 *	13120 *	17010 *	15260 *
	Ws	3020	10.43	3280	4000	4920	6150	7870	10470	14890	15260 *
1 m	We	4180 *	10.37	5440	6500	7880	9800	11890 *	14620 *	19200 *	11170 *
	Ws	2980	10.37	3190	3860	4720	5850	7440	9830	13870	11170 *
0 m	We	4530 *	10.22	5360	6360	7690	9520	12230	15680 *	20500 *	11510 *
	Ws	2990	10.22	3110	3730	4540	5610	7100	9360	13240	11510 *
-1 m	We	5010 *	9.96		6260	7540	9320	11950	16280 *	21020 *	13230 *
	Ws	3080	9.96		3640	4400	5430	6860	9050	12890	13230 *
-2 m	We	5630	9.59		6210	7450	9180	11780	16100	20910 *	15660 *
	Ws	3250	9.59		3590	4320	5310	6710	8890	12750	15660 *
-3 m	We	6110	9.10		6210	7410	9130	11710	16040	20260 *	18670 *
	Ws	3540	9.10		3590	4290	5260	6650	8840	12740	18670 *
-4 m	We	6870	8.46			7460	9150	11740	15340 *	19060 *	22350 *
	Ws	4000	8.46			4330	5280	6680	8890	12860	21960
-5 m	We	8150	7.63				9280	11540 *	13980 *	17210 *	21900 *
	Ws	4770	7.63				5390	6790	9030	13090	21900 *
-6 m	We	8400 *	6.54					9570 *	11790 *	14460 *	18070 *
	Ws	6200	6.54					7030	9300	13450	18070 *

*Hydraulic pressure factor: 87.0%. Without asterisk: Stability factor: 75.0%

https://truckmanualshub.com/

Lifting Capacities (Standard Arm)

Type of machine:	SH350HD-3B	L:	3.25 m Arm length
Arm:	Standard arm	R:	Reach from swing center
Shoe:	600 Grouser shoe	H:	Bucket hook height
Bucket:	1.40 m^3	W:	Lifting capacity

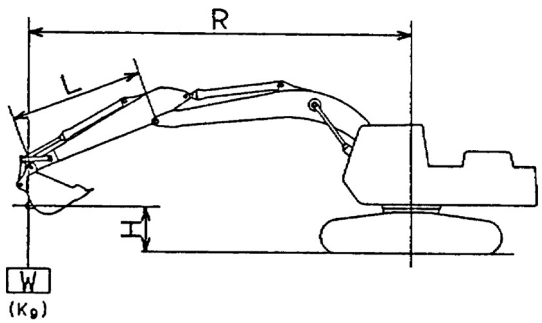

We: Frontal rating load

Ws: Lateral rating load

MAX: Rating load at height point H and at maximum working reach

(Maximum working reach: 9.67 m) (Units: kg)

H \ R		Max. W	Max. R(m)	9 m	8 m	7 m	6 m	5 m	4 m	3 m	2 m
7 m	We	4590 *	8.24		5570 *						
	Ws	4590 *	8.24		5570 *						
6 m	We	4270 *	8.83		6960 *						
	Ws	4270 *	8.83		5720						
5 m	We	4320 *	9.21	5480 *	7250 *	7690 *					
	Ws	4190	9.21	4400	5570	7140					
4 m	We	4450 *	9.48	6300	7640 *	8320 *	9310 *	10790 *			
	Ws	3860	9.48	4290	5390	6850	8920	10790 *			
3 m	We	4650 *	9.63	6170	7590	9020 *	10370 *	12470 *	16140 *	13430 *	
	Ws	3640	9.63	4170	5180	6540	8440	11300	16140 *	13430 *	
2 m	We	4940 *	9.67	6030	7370	9200	11380 *	14000 *	18570 *	6880 *	
	Ws	3510	9.67	4030	4980	6240	7980	10580	14930	6880 *	
1 m	We	5270	9.62	5900	7170	8910	11430	15160 *	20010 *	7740 *	
	Ws	3470	9.62	3910	4800	5970	7600	10030	14150	7740 *	
0 m	We	5350	9.45	5800	7010	8690	11120	15020	19620 *	10320 *	
	Ws	3510	9.45	3820	4650	5760	7320	9670	13760	10320 *	
-1 m	We	5570	9.17	5740	6910	8530	10920	14790	20460 *	13450 *	9730 *
	Ws	3650	9.17	3760	4550	5620	7140	9470	13600	13450 *	9730 *
-2 m	We	5970	8.77		6860	8460	10820	14710	19830 *	17030 *	13170 *
	Ws	3910	8.77		4510	5550	7060	9400	13600	17030 *	13170 *
-3 m	We	6620	8.22		6890	8460	10830	14740	18710 *	21170 *	16790 *
	Ws	4360	8.22		4540	5560	7060	9430	13700	21170 *	16790 *
-4 m	We	7720	7.50			8570	10940	13880 *	17010 *	21320 *	20820 *
	Ws	5110	7.50			5660	7160	9560	13920	21320 *	20820 *
-5 m	We	8530 *	6.55				9720 *	11930 *	14530 *	17890 *	
	Ws	6470	6.55				7370	9820	14270	17890 *	
-6 m	We	8160 *	5.24					8690 *	10820 *		
	Ws	8160 *	5.24					8690 *	10820 *		

*Hydraulic pressure factor: 87.0%. Without asterisk: Stability factor: 75.0%

https://truckmanualshub.com/

Lifting Capacities (Short Arm)

Type of machine:	SH350HD-3B	L:	2.63 m Arm length
Arm:	Short arm	R:	Reach from swing center
Shoe:	600 Grouser shoe	H:	Bucket hook height
Bucket:	1.60 m^3	W:	Lifting capacity

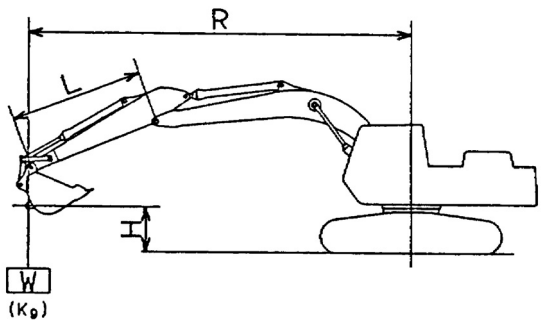

We: Frontal rating load

Ws: Lateral rating load

MAX: Rating load at height point H and at maximum working reach

(Maximum working reach: 9.18 m) (Units: kg)

H \ R		Max. W	Max. R(m)	9 m	8 m	7 m	6 m	5 m	4 m	3 m	2 m
7 m	We	7650 *	7.51			7770 *					
	Ws	6440	7.51			7390					
6 m	We	6380 *	8.28		7700 *	8000 *					
	Ws	5240	8.28		5630	7250					
5 m	We	6450 *	8.69		7910 *	8440 *	9260 *				
	Ws	4670	8.69		5510	7030	9180				
4 m	We	6310	8.97		7760	9020 *	10190 *	12010 *	15200 *		
	Ws	4300	8.97		5350	6760	8740	11740	15200 *		
3 m	We	6000	9.13	6160	7560	9440	11170 *	13600 *	18000 *		
	Ws	4050	9.13	4170	5160	6470	8280	10980	15410		
2 m	We	5850	9.18	6050	7360	9150	11710	14930 *	16260 *		
	Ws	3920	9.18	4060	4980	6200	7870	10340	14390		
1 m	We	5820	9.12	5950	7200	8900	11350	15250	15110 *		
	Ws	3880	9.12	3970	4830	5970	7540	9890	13890		
0 m	We	5940	8.95		7070	8710	11110	14960	17480 *		
	Ws	3950	8.95		4710	5800	7320	9630	13720		
-1 m	We	6230	8.65		7010	8610	10970	14840	20050 *	13150 *	
	Ws	4130	8.65		4650	5700	7200	9520	13700	13150 *	
-2 m	We	6740	8.22		7010	8580	10940	14840	19070 *	18320 *	14360 *
	Ws	4480	8.22		4660	5680	7170	9530	13790	18320 *	14360 *
-3 m	We	7610	7.64			8650	11010	14500 *	17600 *	21550 *	19310 *
	Ws	5070	7.64			5740	7240	9630	13970	21550 *	19310 *
-4 m	We	8830 *	6.85				10650 *	12890 *	15510 *	18720 *	
	Ws	6100	6.85				7410	9830	14260	18720 *	
-5 m	We	8520 *	5.80					10300 *	12450 *	14740 *	
	Ws	8150	5.80					10190	12450 *	14740 *	

*Hydraulic pressure factor: 87.0%. Without asterisk: Stability factor: 75.0%

https://truckmanualshub.com/

Lifting Position

Lifting Position

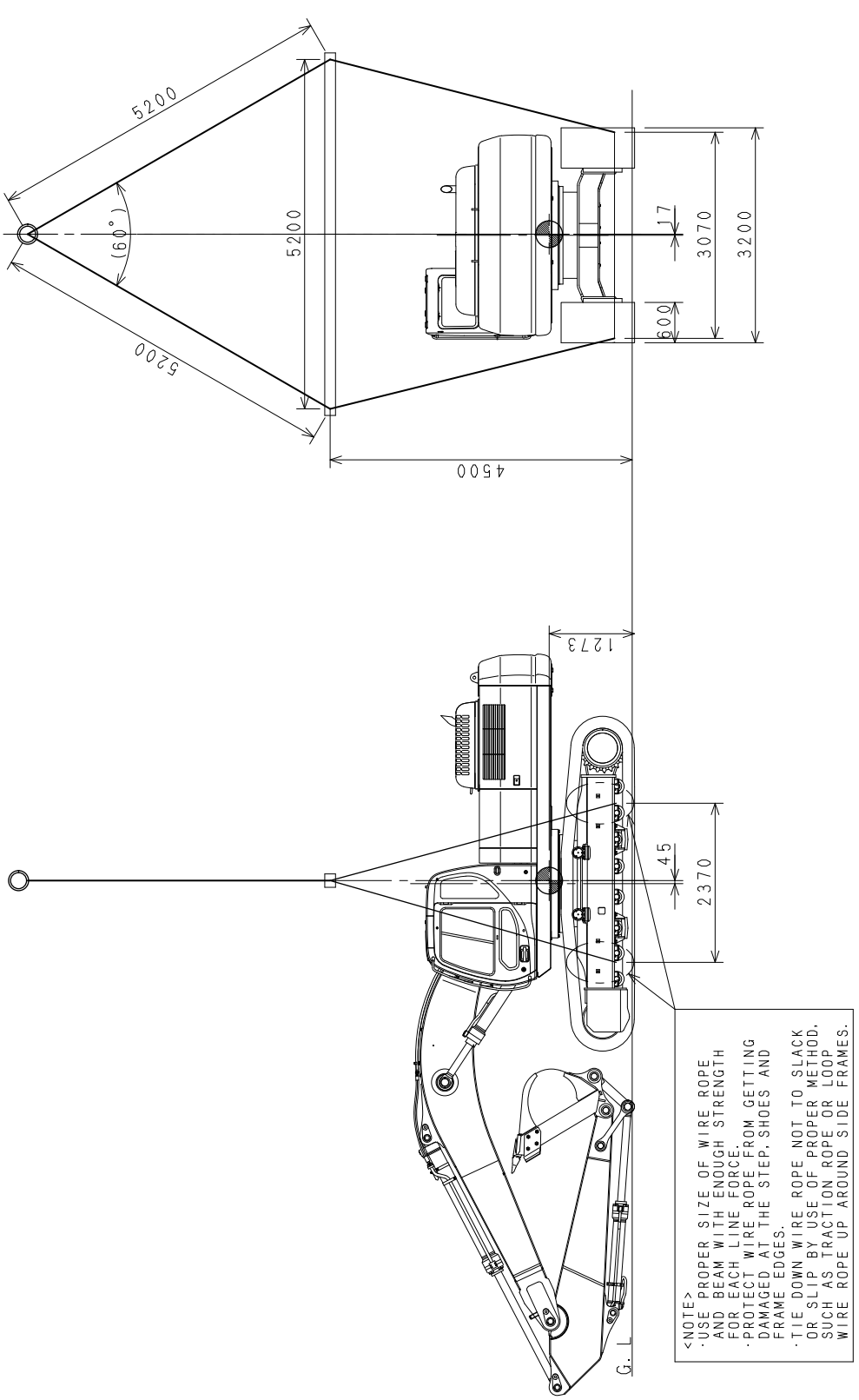

BKSU4036-B00

https://truckmanualshub.com/

Hydraulic Pump Control Curve

First Edition : 11/2005

Rev.1 04/2007

P-Q Line Diagram of Hydraulic Pump

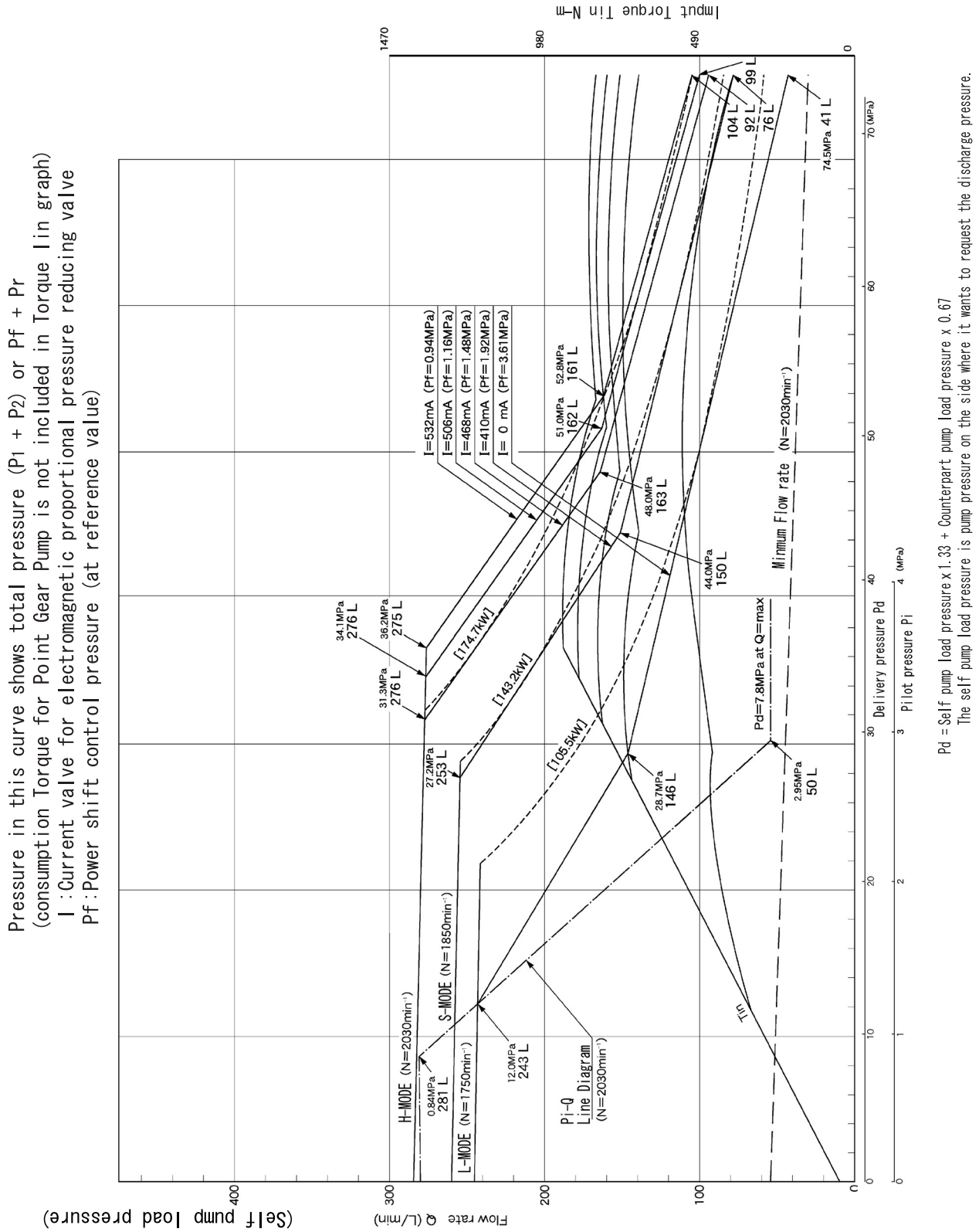

https://truckmanualshub.com/

Maintenance Instructions

Process Block Diagram for Lower Equipment

[1] This diagram shows the disassembling procedure. For reassembling, the procedures are reversed.
[2] For details on the topics in the square-cornered blocks ( ), refer to the disassembly and reassembly of each device.
[3] For details on the topics in the blocks with rounded corners ( ), refer to the instructions for disassembly and maintenance of each device.

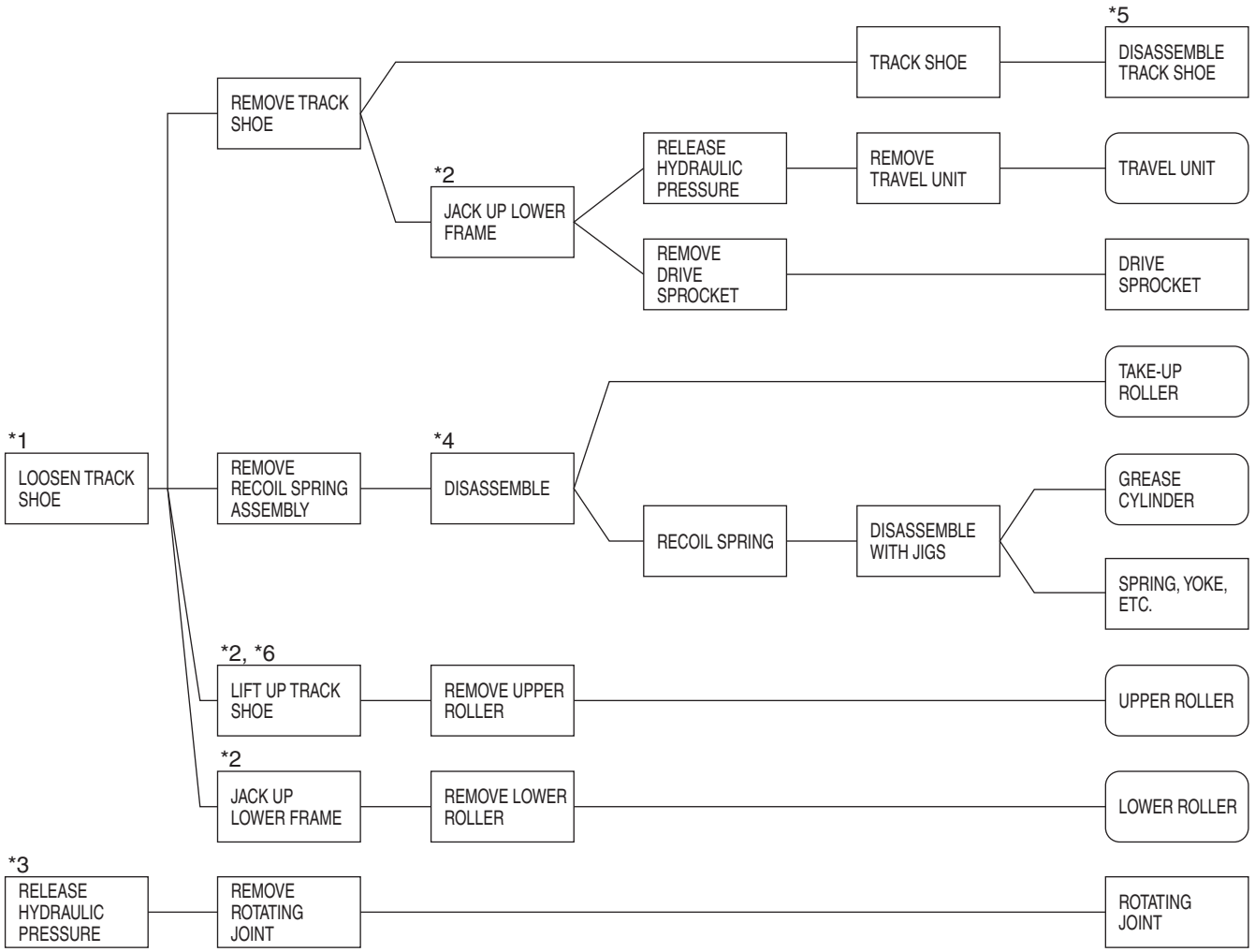

Items marked with an asterisk (*) in this drawing require the following preparation:

*1 Refer to Track shoe tension adjustment (Instruction Manual).
*2 Prepare protection blocks.
*3 Refer to the procedures for bleeding the hydraulic pressure.
*4 Prepare jigs for recoil spring disassembly and reassembly. Be sure you know how to use them.
*5 Prepare a press for pulling out and press fitting track pins of track shoe.
*6 Prepare a hydraulic jack.

https://truckmanualshub.com/

Tightening Torque for Major Parts

1. Tightening bolts and nuts

- Tighten bolts and nuts right to left and up and down alternatively so that tightening force is applied evenly.

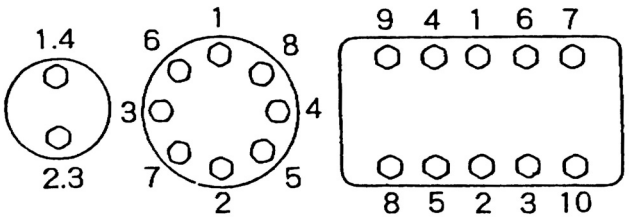

- For bolts on important areas, apply engine oil to the threaded portion so that tightening force is applied evenly without unnecessary engagement on the thread.
- For bolts and nuts in the areas that it is difficult to check from outside or bolts and nuts in important areas, secure them using wires, cotter pins or folding washers.

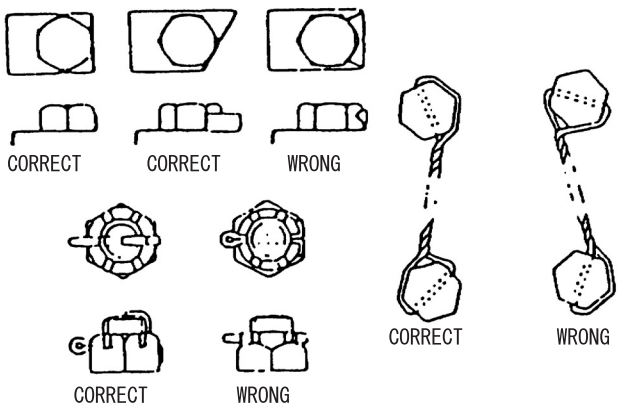

- Clean bolts to which Loctite was applied (identified as bolts with white substances when removed) with cleaning solution and dry them. After that, apply Loctite two or three drops to the threaded portion of the bolts and fasten them.

Inspection and Maintenance

Retightening bolts and nuts

1st Time Maintenance: First 50 hours for brand new machine - Maintenance Interval:

Every 250 hours

Tighten and retighten bolts and nuts in each area according to the table below. Check bolts and nuts for looseness or falling prior to routine operation. If they are loosened, retighten them. If they are lost, reinstall them.
When using a brand new machine, inspect and retighten bolts and nuts at the first 50 hours and every 250 hours thereafter.

https://truckmanualshub.com/

Bolt and Nut Torque

- **After the first 50 hours**
- **Maintenance: every 250 hours**

Tighten the bolts and nuts according to the table. After daily work, check the bolts and nuts for looseness and for any missing. Tighten if loose and replace if missing.
Tighten the bolts and nuts after the first 50 hours of operation and every 250 hours thereafter.

Tightening Torque Table

No.	Tightening Point		Bolt Diameter	Wrench	Tightening Touque (N・m)
①	Travel Motor		M24	36mm	900-1051
②	Drive Sprocket		M20	30mm	521-608
③	Take-up Roller		M16	24mm	267-312
④	Upper Roller		M20	30mm	521-608
⑤	Lower Roller		M24	36mm	902-1049
⑥	Track Guard		M24	36mm	902-1049
7	Shoe Bolt		M24	32mm	1236-1510
8	Counterweight		M33	50mm	1685-1960
9	Turntable Bearing		M24	36mm	900-1050
⑩	Swing Equipment		M24	36mm	900-1050
⑪	Engine	Mount	M20	30mm	289-337
⑫		Front bracket	M10	17mm	64-73
⑬		Rear bracket	M12	19mm	109-127
⑭	Radiator		M16	24mm	147-176
⑮	Hydraulic Pump	Frange	M10	17mm	64-73
⑯		Pump	M20	17mmHex. bar	367-496
⑰	Hydraulic Oil Tank		M16	24mm	233-276
⑱	Fuel Tank		M16	24mm	233-276
⑲	Control Valve		M16	24mm	267-312
⑳	Rotating Joint	Lock bar	M16	24mm	267-312
㉑		Joint	M12	19mm	54-64
22	Cab	Floor	M16	24mm	78-80
㉓		Mount	M10	17mm	35-42
24	Battery		M10	17mm	20-29

Note: Use Loctite No. 262 (adhesive) equivalent on those marked with ° and tighten to the torque listed in the above table.
Tightening torque is N・m ÷ 9.8 = kgf・m.

The tightening torque for the bolts and nuts not listed above are as follows:

Bolt Diameter (size)			M6	M8	M10	M12	M14	M16	M18	M20
Hexagon Bolt	Wrench	(mm)	10	13	17	19	22	24	27	30
	Tightening Torque	(N・m)	6.9	19.6	39.2	58.8	98.1	157.0	196.0	274.0
Hexagon Socket Head Bolt	Wrench	(mm)	5	6	8	10	12	14	14	17
	Tightening Torque	(N・m)	8.8	21.6	42.1	78.4	117.6	176.4	245.0	343.0

https://truckmanualshub.com/

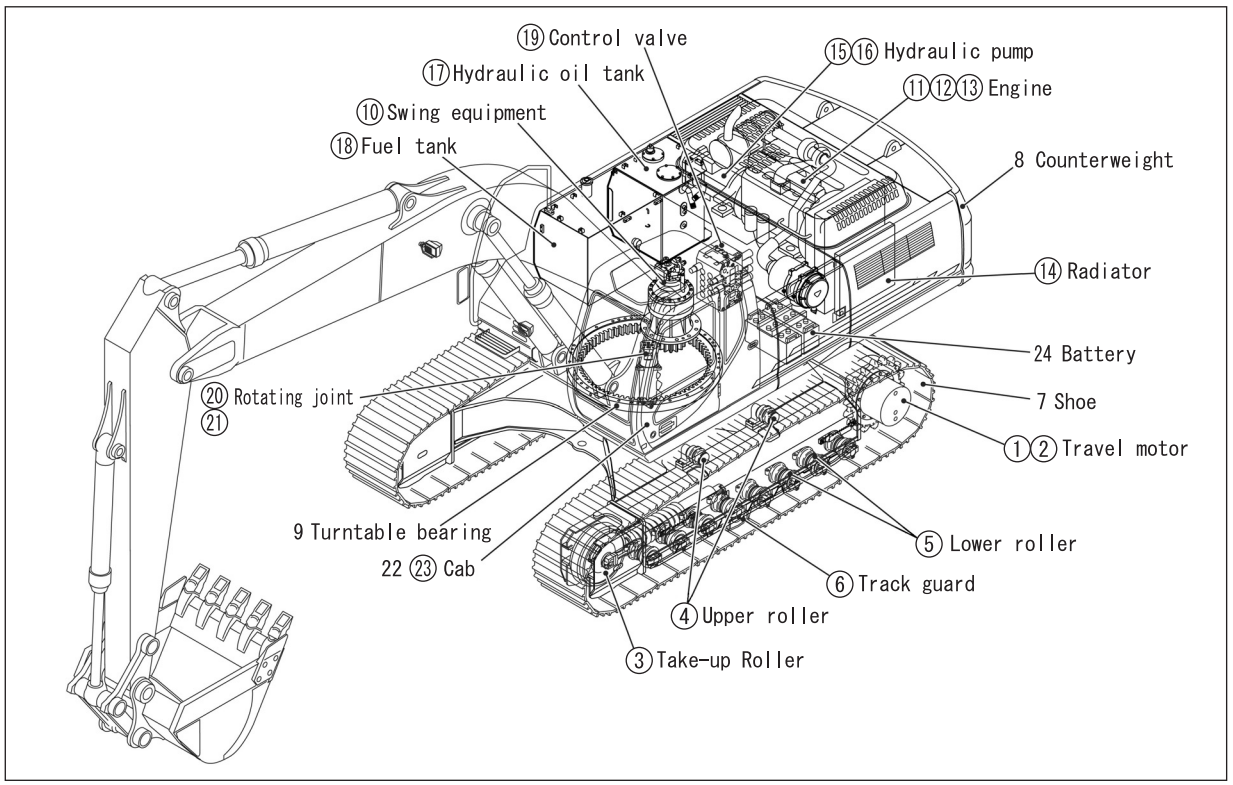

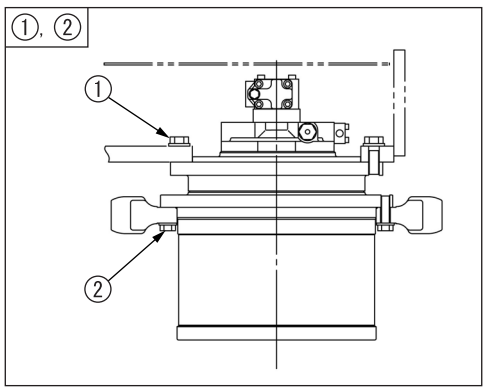

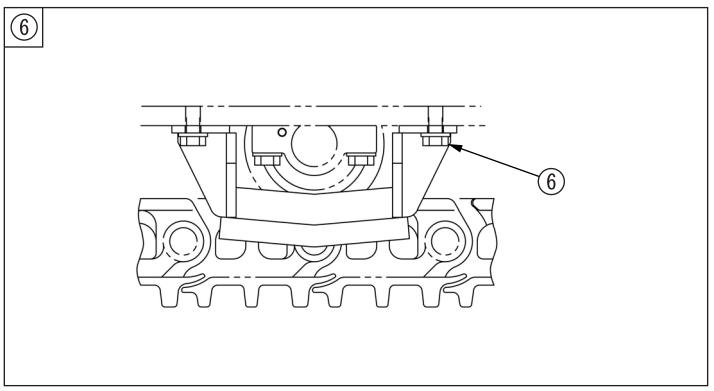

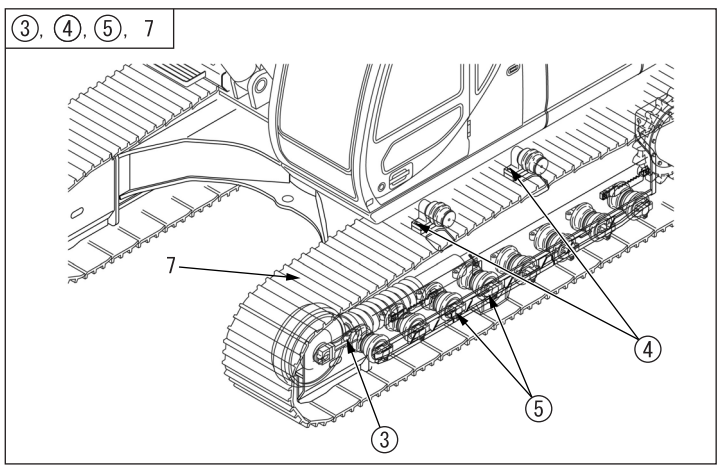

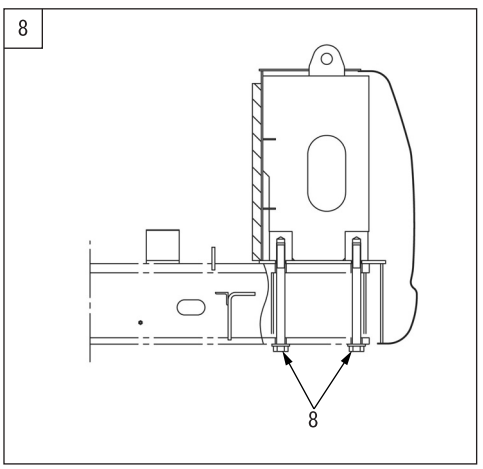

https://truckmanualshub.com/

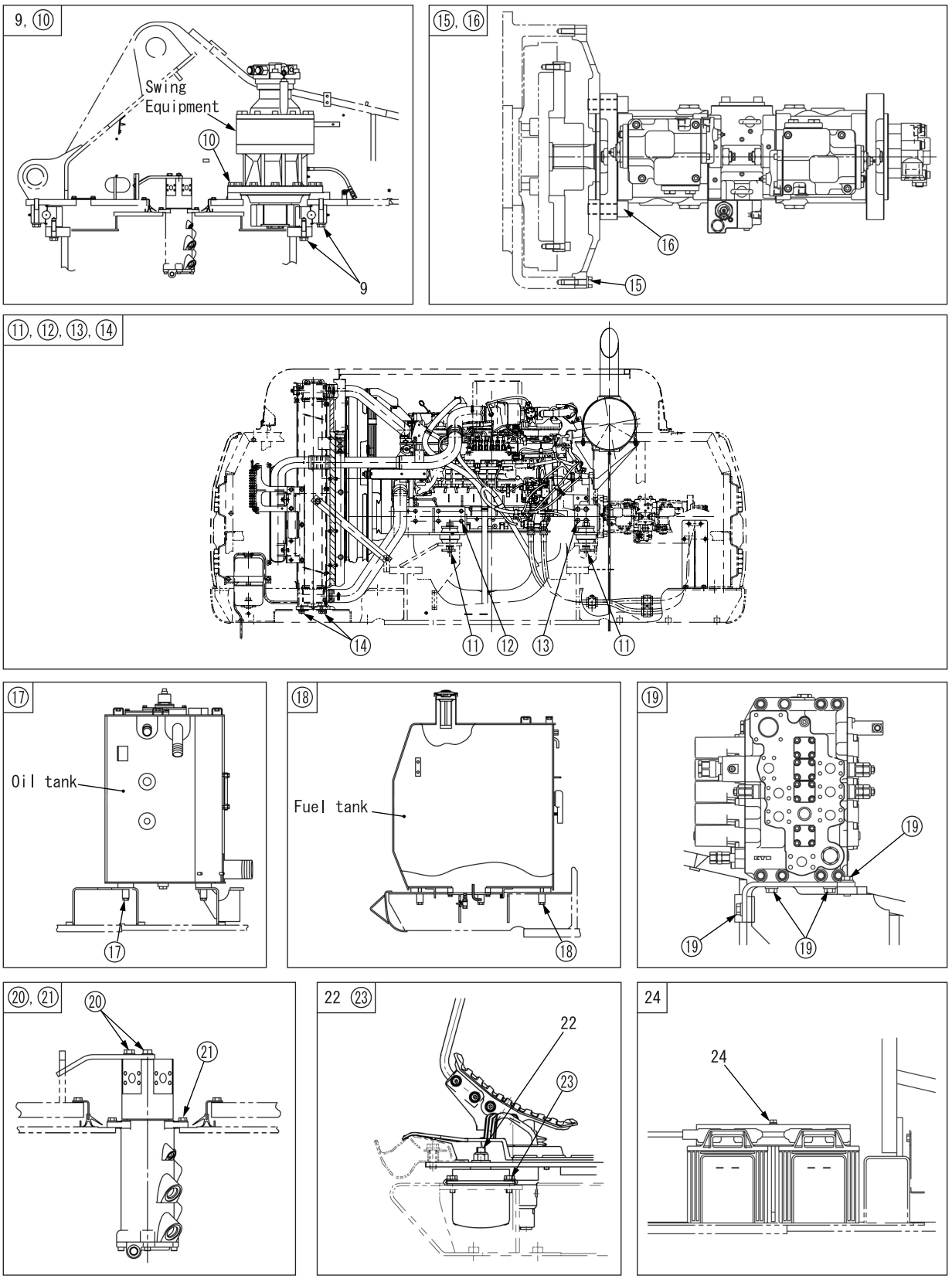

https://truckmanualshub.com/

Lower Mechanism

Track Shoe

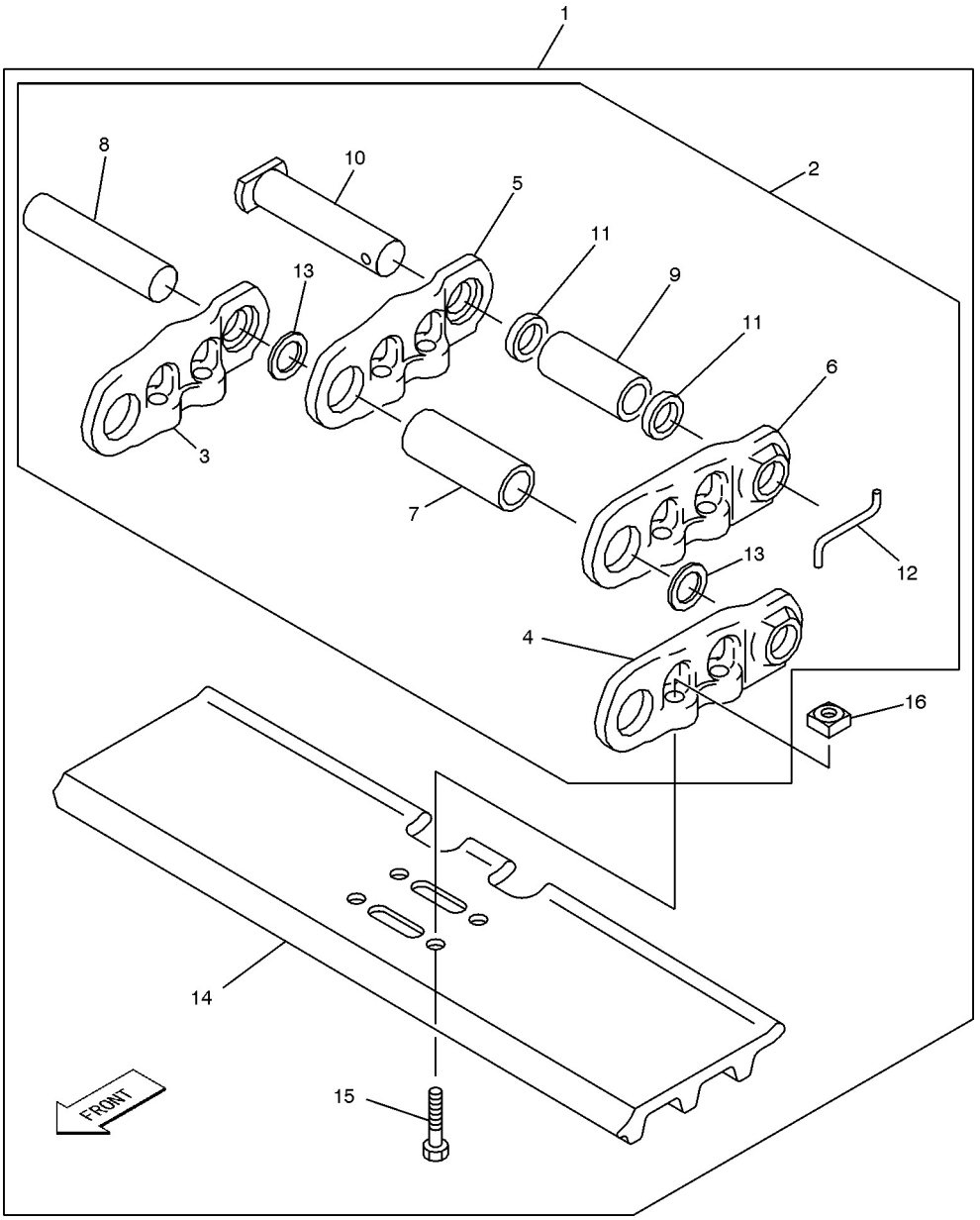

SYMBOL	PART NAME
1	GROUSER SHOE
2	TRACK LINK ASSEMBLY
3	TRACK LINK (RIGHT)
4	TRACK LINK(LEFT)
5	MASTER LINK (RIGHT)
6	MASTER LINK(LEFT)
7	TRACK BUSHING
8	TRACK PIN
9	MASTER BUSHING
10	MASTER PIN
11	COLLAR
12	LOCKING PIN
13	SEAL
14	SHOE PLATE
15	SHOE BOLT
16	SHOE NUT

https://truckmanualshub.com/

1. Disassembly

1	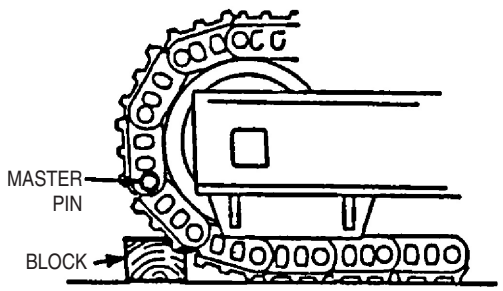	Position the master pin of the track shoe as shown in the drawing on the left. Place track shoe support blocks as shown in the drawing.
2	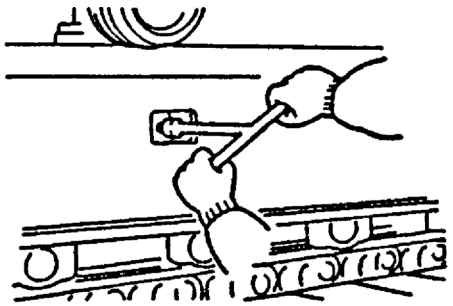	Loosen the track shoe. **CAUTION:** Discharge the grease from the grease cylinder gradually by loosening the cylinder check valve. Loosen the check valve slowly and carefully. Stop loosening when the grease starts to comes out. (If the valve is loosened too much, the extremely high pressure inside may cause grease to erupt or the plug to pop out.)
3	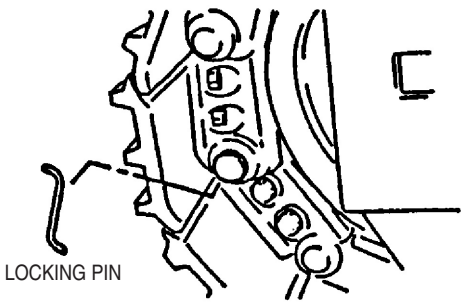	Separate the track shoe. • Remove the locking pin. • Pull out the master pin using a jig. • Remove the track shoe supporting blocks.
4	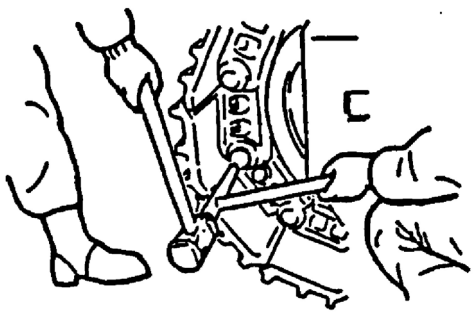	
5	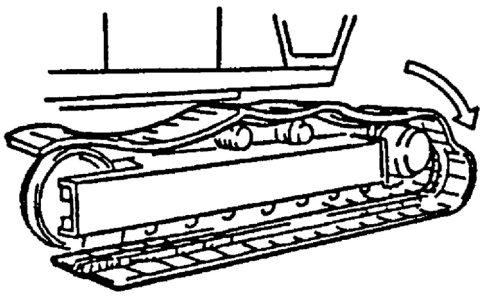	Lift one side of the lower frame about 20 cm and hold it there. **CAUTION:** Place protection blocks under the lower frame and secure them. Move the travel unit as shown in the drawing to the left to remove the track shoe.

https://truckmanualshub.com/

2. Assembly

1	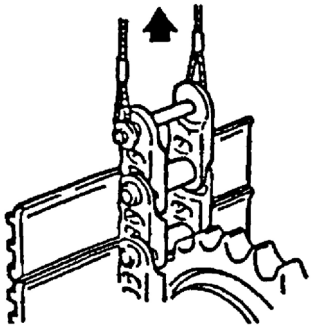	Lift the track shoe and align it to the drive sprocket.
2	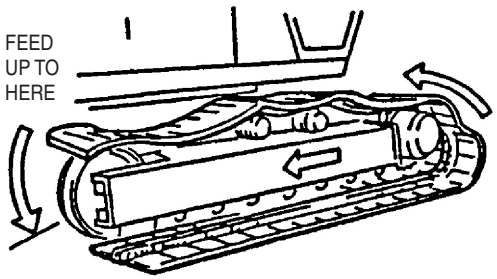	Feed the track shoe toward the take-up roller by moving the travel unit slowly as shown in the drawing to the left. **NOTE:** Be careful. Sudden and quick movements may cause the track shoe to jump and run off. (During work, lift the roller shoe using the steel bar when crossing over the upper roller.) Remove protection blocks and lower the lower frame.
3	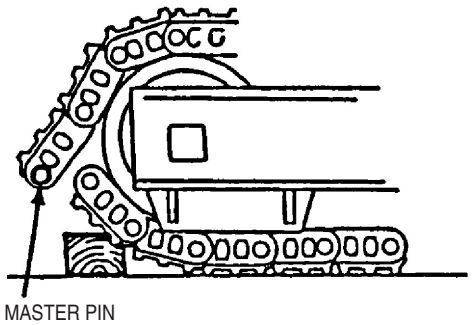	Wind the end of the track shoe onto the take-up roller of the track shoe. Connect the track shoe. • Place the track shoe support blocks. • Insert the master pin using a jig. • Insert a locking pin.
4	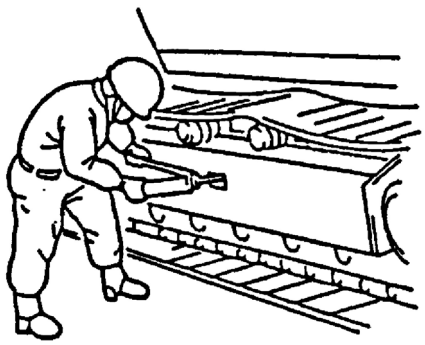	Adjust the track shoe to the specified tension. • Fasten the check valve to the original position. • Fill the grease cylinder with grease, while observing the track shoe tension. **NOTE**: For the track shoe tension adjustment, refer to *Inspection and Maintenance in the Instruction Manual.*

https://truckmanualshub.com/

3. Track link changing procedure

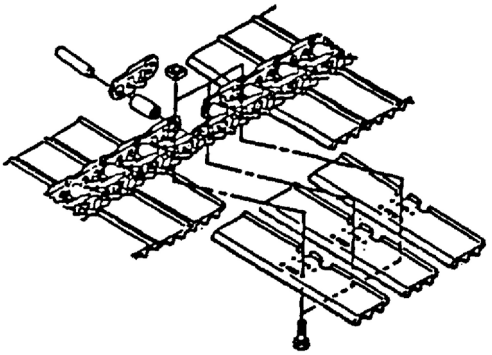

[1] Remove the track shoe.

[2] Remove bolts, nuts and shoe plates for three sections, including the sections on both sides of the damaged link section.

[3] Pull the track pin using a jig.

[4] Remove the damaged link.

[5] Align a new track link.

[6] Press fit the track pin using a jig.

[7] Align the shoe plate and tighten the bolts to the specified torque.

[8] Install the track shoe.

https://truckmanualshub.com/

Travel Unit

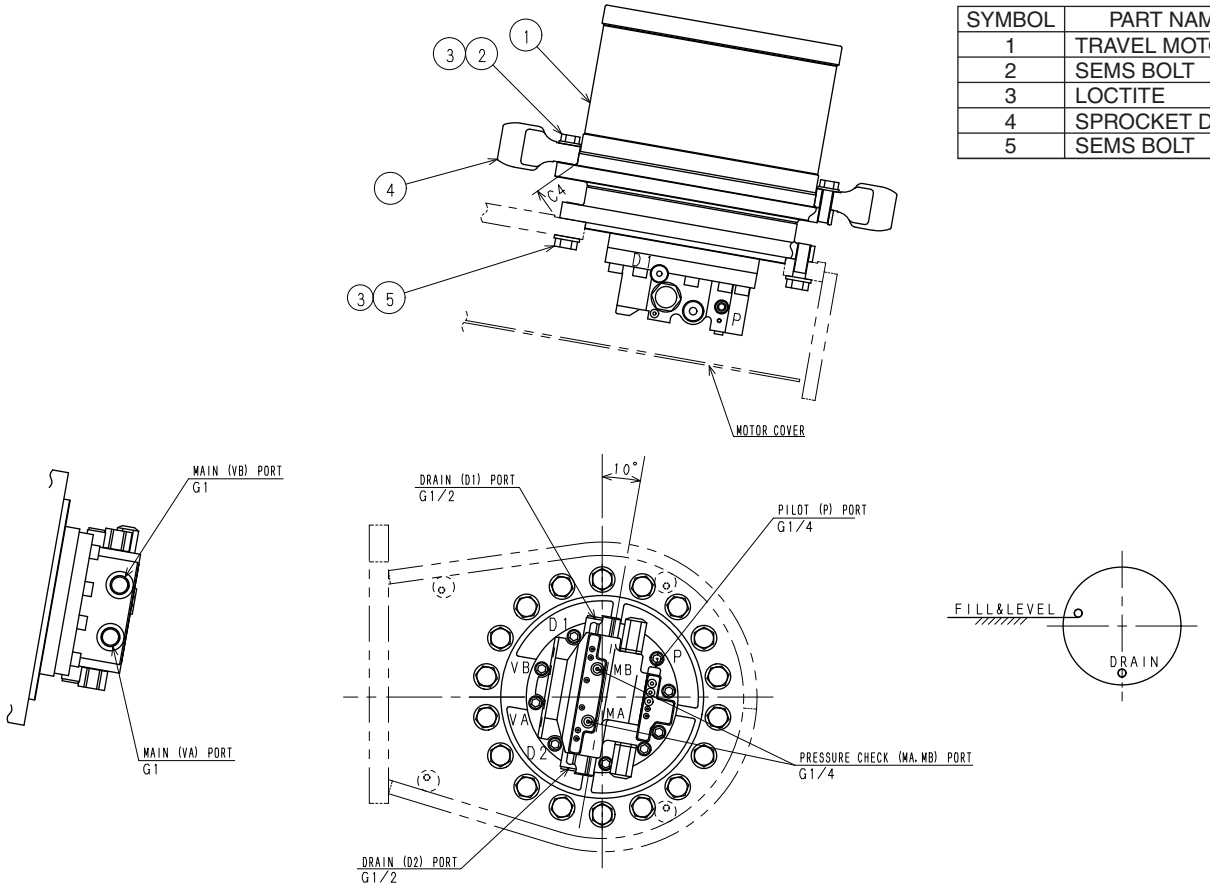

SYMBOL	PART NAME
1	TRAVEL MOTOR
2	SEMS BOLT
3	LOCTITE
4	SPROCKET DRIVE
5	SEMS BOLT

1. Precautions when assembling

[1] Be careful of direciton when attaching sprockets to the machine.
The side having the C4 chamfer of the sprocket must face the traction motor.

[2] Coat the threads with loctite # 262 or equivalence, and fasten them by tightening torque.

[3] When starting the machine after assembling, bleed the air.

[4] Set the reduction gear as shown in the follewing fig when checking and filling the oil.
(The lowest point of oil level port is the standard oil level.)

[5] When changing the reduction gear oil, remove drain plugs from the reduction gear side, and let the oil drain out. Next, screw the plugs back in and fill the oil the normal oil level.

https://truckmanualshub.com/

2. Disassembly

[1] Remove track shoe.
(See *2. Track Shoe, Disassembly*.)

[2] Lift one side of lower frame about 20 cm and hold it there.
(Lift it high enough for the drive sprocket to be removed from the track shoe.)

[3] Place protection blocks under lower frame and secure them.

[4] Stop engine and release pressure in hydraulic circuits.
(See the *procedures for bleeding the hydraulic pressure in Precautions for Use in Chapter 0*.)

[5] Remove motor cover.

[6] Remove drive sprocket mounting bolts (2).

[7] Separate drive sprocket from mounting flange on travel unit using a steel bar.

[8] Attach a lifting tool onto the drive sprocket.

※ [9] Using the lifting tool, lift the drive sprocket and remove it from the travel unit.

[10] Attach marking tags to the travel motor hoses to tell them apart when they are reconnected.

[11] Remove the hoses and put bull plugs or caps on them to keep out dust.

[12] Attach the lifting tool onto the travel unit.

Note: Lift the travel unit until the wire on the lifting tool is tense.

[13] Remove travel unit mounting bolts (5).

[14] Remove travel unit using a steel bar.

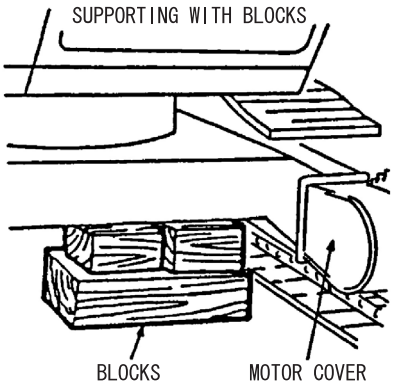

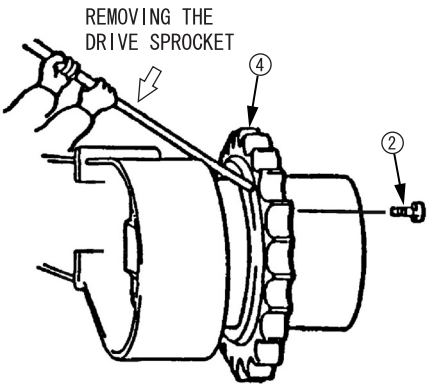

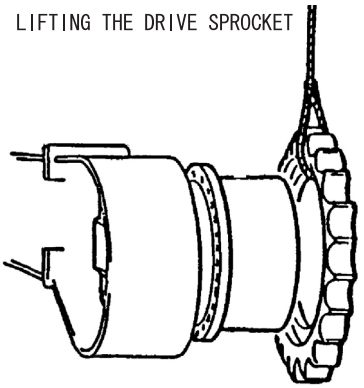

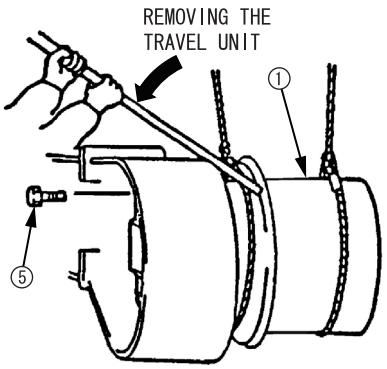

https://truckmanualshub.com/

3. Assembling

[1] Lift travel unit and align it so that it fits on the frame. (Be careful of the fitting angles.)

[2] Apply Loctite No. 262 to threads of travel unit mounting bolts (5) and finger tighten all mounting bolts.

[3] Tighten travel unit mounting bolts (5) to the specified torque alternatively, up/down and left/right, so that the tightening force acts on them equally. (Refer to *Tightening torque in the Maintenance Instructions*.)

[4] Lift drive sprocket and confirm that it is oriented correctly.

[5] Align drive sprocket to mounting flange on the travel unit using a steel bar.

[6] Apply Loctite No. 262 to threads of drive sprocket mounting bolts (2), and finger tighten all mounting bolts.

[7] Tighten drive sprocket mounting bolts (2) to the specified torque alternatively, up/down and left/right, so that the tightening force acts on them equally. (Refer to *Tightening torque in the Maintenance Instructions*.)

[8] Connect hoses to travel motor.

[9] Check reduction gear oil level. Fill if necessary.

[10] Bleed air from travel motor. (Fill motor with hydraulic oil)

[11] Remove protection blocks.

[12] Lower the lower frame on the track shoe.

[13] Install track shoe. (See *Track Shoe, Assembly*)

[14] Check to ensure that there is no oil leakage. If leakage is found, take appropriate measures.

[15] Install motor cover.

BOLT TIGHTENING ORDER:
TIGHTEN THE FOUR NUMBERED BOLTS EVENLY IN THE SEQUENCE SHOWN BELOW, AND THEN FASTEN THE REMAINING BOLTS.

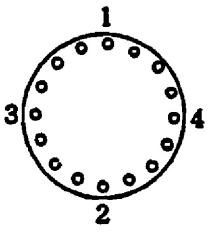

https://truckmanualshub.com/

Lower Mechanism

Recoil Spring Assembly

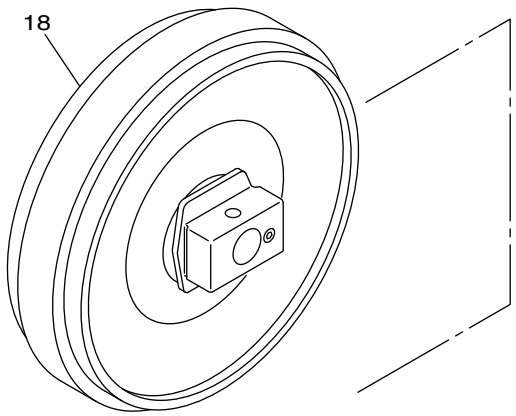

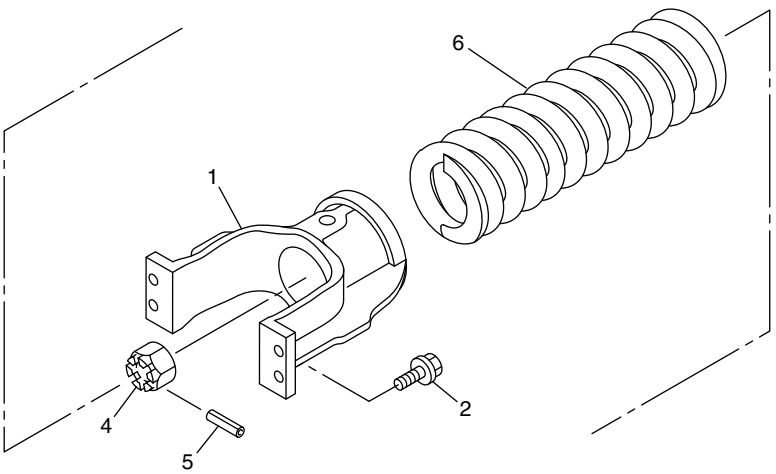

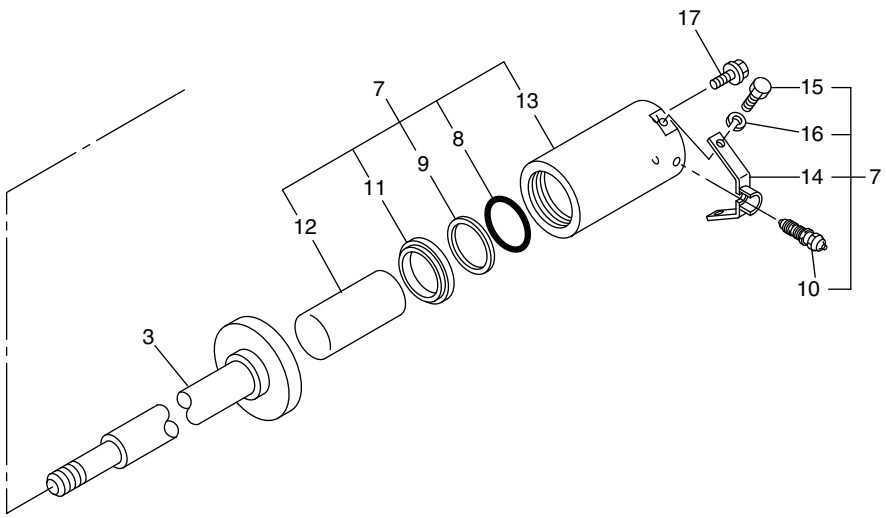

SYMBOL	PART NAME
1	YOKE
2	SEMS BOLT
3	THREADED ROD
4	CASTLE NUT
5	SPRING PIN
6	SPRING
7	GREASE CYLINDER ASSEMBLY
8	O-RING
9	BACKUP RING
10	CHECK VALVE
11	DUST SEAL
12	PISTON ROD
13	GREASE CYLINDER
14	BRACKET
15	HIGH-STRENGTH BOLT
16	SPRING WASHER
17	SEMS BOLT
18	TAKE-UP ROLLER

https://truckmanualshub.com/

1. Disassembly

[1] Remove the track shoe. (See *Track Shoe, Disassembly*.)

[2] Pull out the recoil spring assembly from the side frame using a steel bar.

[3] Attach a lifting tool to the recoil spring assembly.

[4] Lift the recoil spring assembly out from the side frame using the lifting tool.

[5] Place the recoil spring assembly on blocks.

[6] Remove the take-up roller mounting bolts (2) to separate the take-up roller and coil spring.

[7] Prepare hydraulic jack and jigs for recoil spring disassembling and reassembling.

[8] Set recoil spring in jig as shown in the drawing to the left.

[9] Raise the hydraulic jack to compress the spring.

[10] Pull out the spring pin (5) and remove the castle nut (4).

[11] Lower the hydraulic jack to restore the spring to its original position.

[12] Take the recoil spring components out from the jig in the following order: yoke (1), spring (6) .

[13] Remove the grease cylinder mounting bolts (17) them, remove the grease cylinder from the side frame.

PULLING OUT THE ASSEMBLY

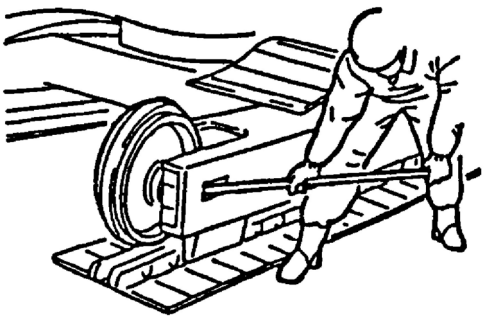

LIFTING THE ASSEMBLY

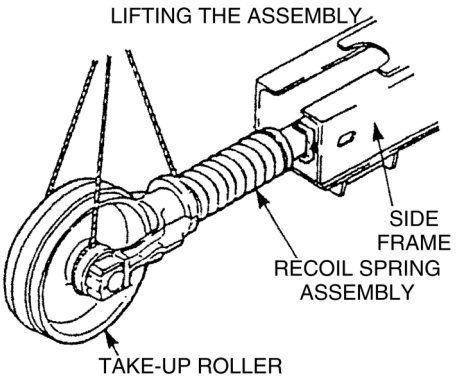

https://truckmanualshub.com/

2. Assembly

[1] Apply Loctite No.262 to the grease cylinder mounting bolts (17).

[2] Tighten the grease cylinder mounting bolts (17) according as the specified torque on the side frame.

Note: Set it so that the grease cylinder check valve faces outward.

[3] Set the recoil spring components in the recoil spring jig in the following order: spring (6) and yoke (1).

[4] Raise the hydraulic jack to compress the spring. Mounting length of spring: 779 mm

[5] Attach the castle nut (4) and lock it with spring pin (5).

[6] Lower the hydraulic jack to restore the spring to the original position.

[7] Remove the recoil spring from the jig.

[8] Apply Loctite No. 262 to the take-up roller mounting bolts (2).

[9] Tighten the take-up roller mounting bolts (2) to the specified torque to reassemble the take-up roller and recoil spring.

[10] Attach lifting tool to recoil spring assembly.

[11] Place recoil spring assembly on side frame using a lifting tool.

[12] Set the recoil spring assembly in the side frame using a steel bar.

[13] Install the track shoe. (See *Track Shoe, Assembly*.)

⚠	**CAUTION:** A jig should be used for disassembly and reassembly because the coil spring is compressed.

PLACING THE ASSEMBLY ON BLOCKS

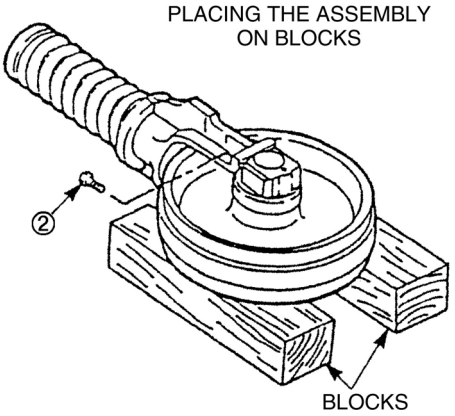

USING THE JIG

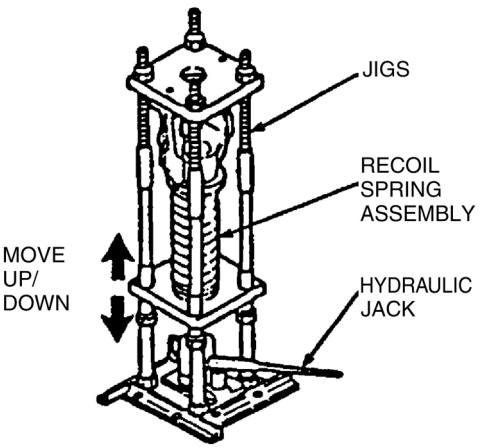

https://truckmanualshub.com/

Lower Mechanism

First Edition : 03/2005

Upper Roller

SYMBOL	PART NAME
1	UPPER ROLLER
2	SEMS BOLT
3	LOCTITE 262
4	SHIM

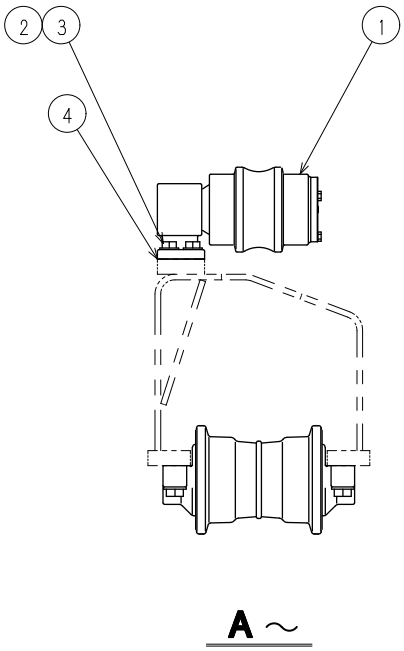

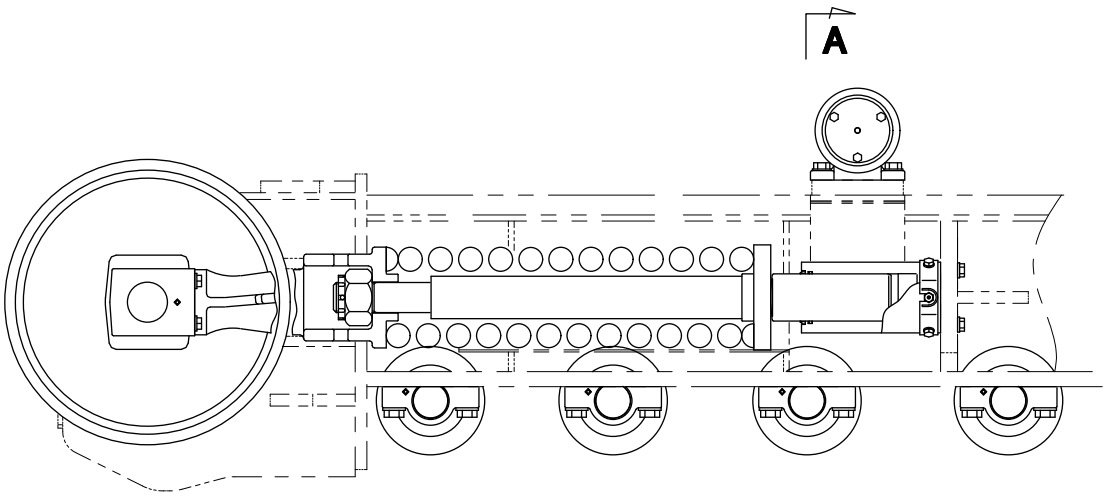

https://truckmanualshub.com/

1. Disassembly

[1] Loosen the track shoe. (See Track shoe, Disassembly)

[2] Place the hydraulic jack as shown in the drawing to the left.

[3] Using the hydraulic jack, lift the track shoe high enough that the upper roller can be removed.

[4] Place blocks between the track shoe and side frame and secure them.

[5] Loosen the upper roller mounting bolt (2) slightly (so that the bolt head comes off 2 to 4 mm).

※ [6] Hit the upper roller gently with a copper hammer and detach it from the side frame.

[7] Attach lifting tools on the upper roller.

[8] Remove the upper roller by removing mounting bolts (2) completely while lifting the upper roller using the lifting tools.

Note: Be careful to keep fingers and hands clear.

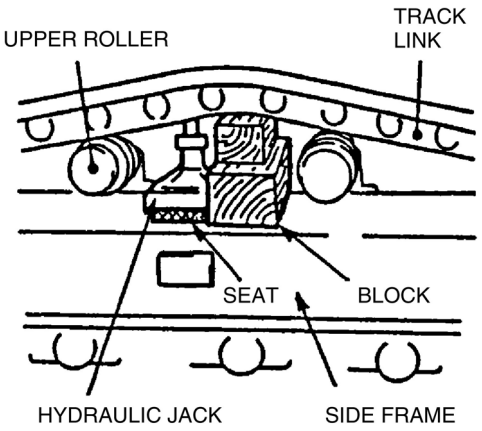

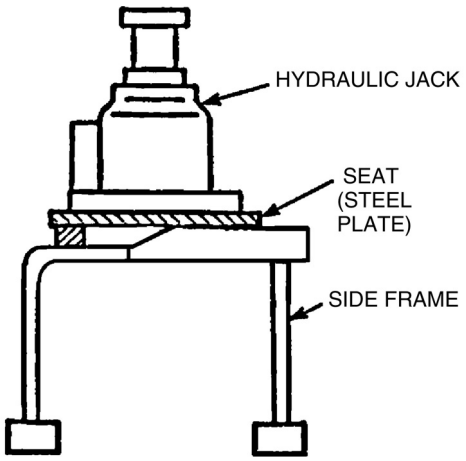

2. Assembly

[1] Apply Loctite No. 262 to the upper roller mounting bolts (2).

※ [2] Finger tighten all upper roller mounting bolts (2) while lifting the upper roller.

Note: Adjust the position of the upper roller if necessary, using shims (4) so that the track links are evenly supported.

[3] Tighten the upper roller mounting bolts (2) to the specified torque.

[4] Remove the blocks and jack.

[5] Fill grease into the grease cylinder and give the track shoe the specified tension.
(See *Track shoe, Assembly*)

https://truckmanualshub.com/

Lower Mechanism

Lower Roller

SYMBOL	PART NAME
1	LOWER ROLLER
2	SEMS BOLT
3	LOCTITE 262

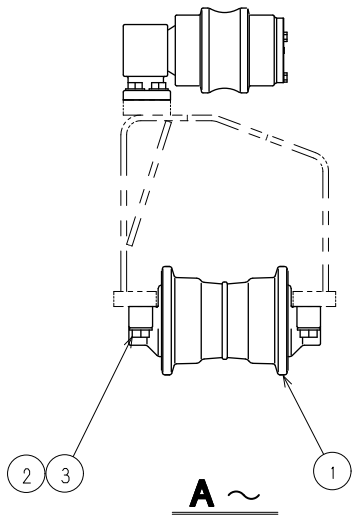

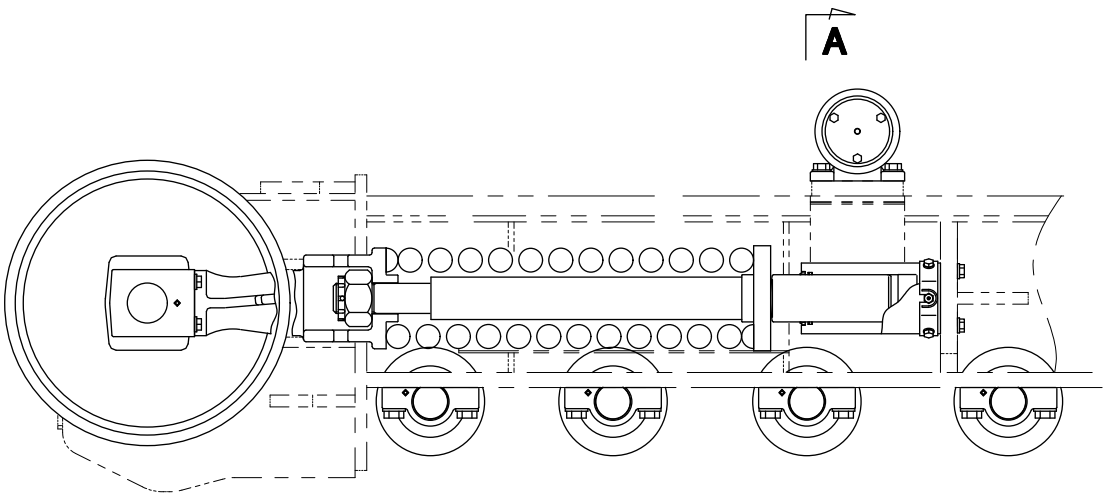

https://truckmanualshub.com/

Lower Mechanism

1. Disassembly

[1] Loosen the track shoe. (See *Track Shoe, Disassembly*)

[2] Remove the lower roller mounting bolts (2).

[3] Lift one side of the lower frame about 20 cm and hold it there. (Lift it high enough that the lower roller can be removed from the track shoe.)

[4] Place protection blocks under the lower frame and secure them.

[5] Remove the lower roller from the track shoe.

SUPPORTING THE FRAME WITH BLOCK

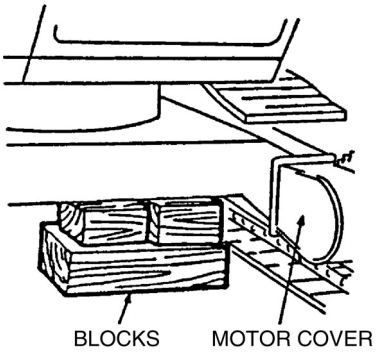

2. Assembly

[1] Place the lower roller on the track links with its fitting surface up.

[2] Remove the protection blocks.

[3] Lower the frame slowly and gradually to where the bolts can be installed.

Note: Be careful to keep fingers and hands clear. (Keep the frame raised about 5 to 10 mm, instead of lowering it completely.)

[4] Align the lower roller to the frame fitting position.

[5] Apply Loctite No. 262 to the lower roller mounting bolts (2).

[6] Tighten the lower roller mounting bolts (2) to the specified torque.

[7] Fill the grease cylinder with grease to give the track motor cover shoe the specified tension.
(See *Track shoe, Assembly*)

PLACING THE LOWER ROLLER

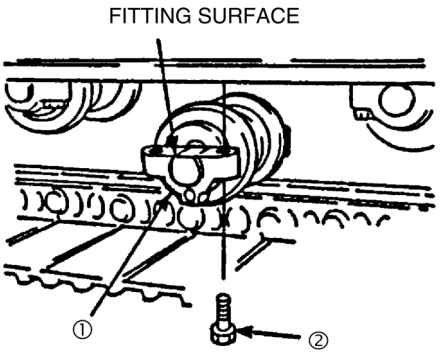

https://truckmanualshub.com/

Lower Mechanism

Rotating Joint

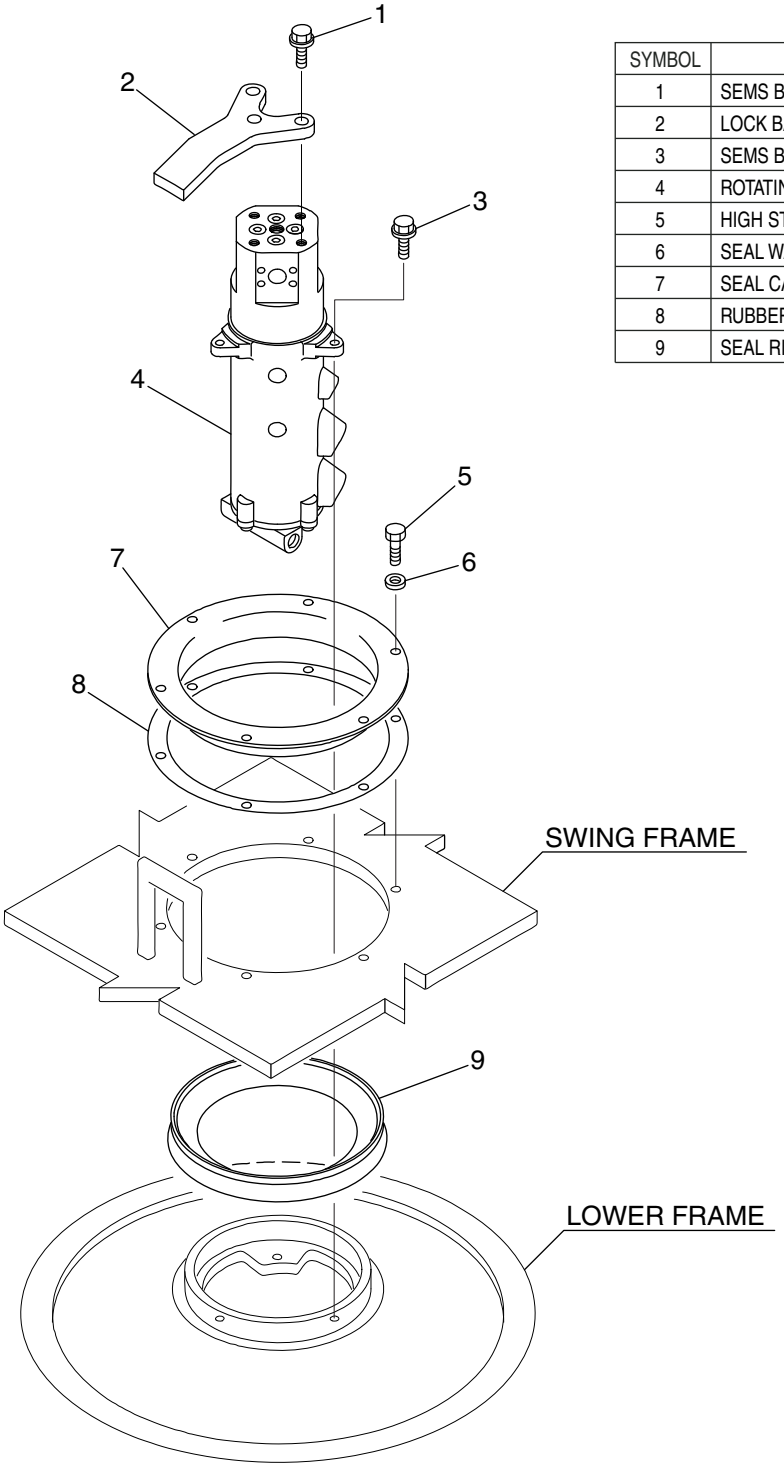

SYMBOL	PART NAME
1	SEMS BOLT
2	LOCK BAR
3	SEMS BOLT
4	ROTATING JOINT ASSY
5	HIGH STRENGTH BOLT
6	SEAL WASHER
7	SEAL CAP
8	RUBBER PACKING
9	SEAL RING

https://truckmanualshub.com/

Lower Mechanism

1. Disassembly

[1] Jack up the body.

[2] Stop the engine and release pressure in the hydraulic circuits. (Refer to the procedures for bleeding the hydraulic pressure in *05 Precautions for Use in Choter 0.*)

[3] Place protection blocks under the track shoe and secure them.

[4] Remove the under cover.

[5] Attach marking tags to the rotating joint hoses to tell them apart when they are reconnected.

[6] Remove the hoses and put blank plugs or caps on them to keep out dust.

[7] Remone the lock bar mounting bolts (1).

[8] Remove the lock bar (2).

[9] Remove the rotating joint mounting bolts (3).

[10] Lift out the rotating joint.

2. Assembly

[1] Align it so that it fits on the lower frame.

[2] Apply Loctite No. 262 to the rotating joint mounting bolts (3).

[3] Tighten the rotating joint mounting bolts (3) to the specified torque.

[4] Apply Loctite No. 262 to the lock bar mounting bolts (1).

[5] Tighten the lock bar mounting bolts (1) to the specified torque to install the lock bar (2). (See illustration.)

[6] Connect the hoses.

[7] Check to ensure that there is no oil leakage. If leakage is found, take appropriate measures.

[8] Install the under cover.

[9] Remove the blocks.

[10] Lower the body.

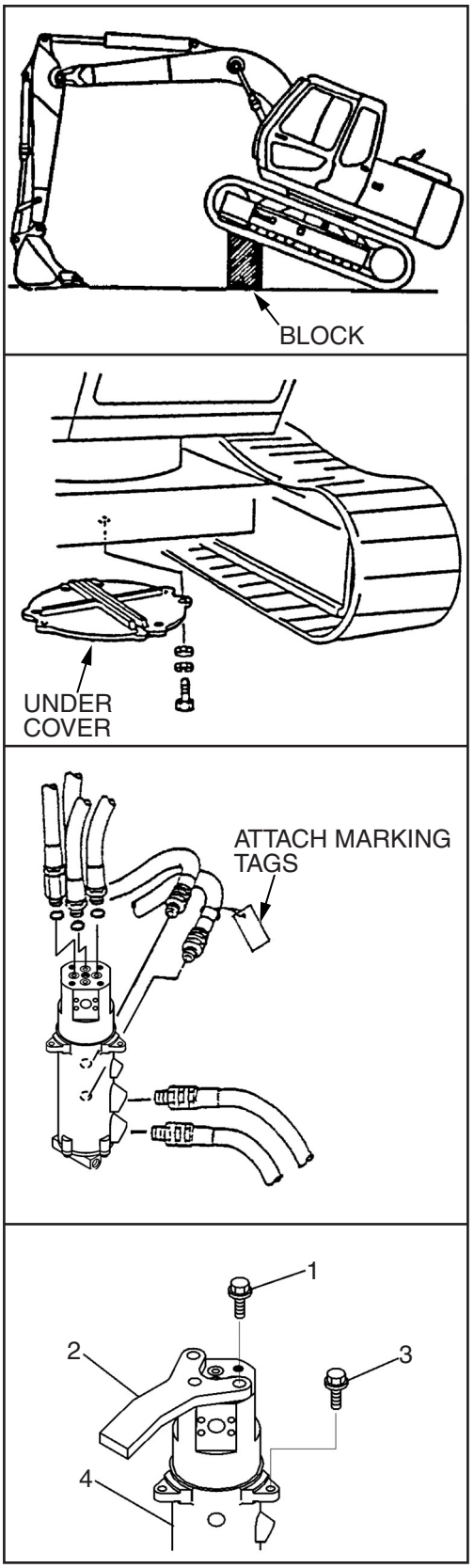

https://truckmanualshub.com/

	300-5-02-01-19
Upper Mechanism	Page No. 1 / 2
	First Edition : 01/2002

Swing Unit

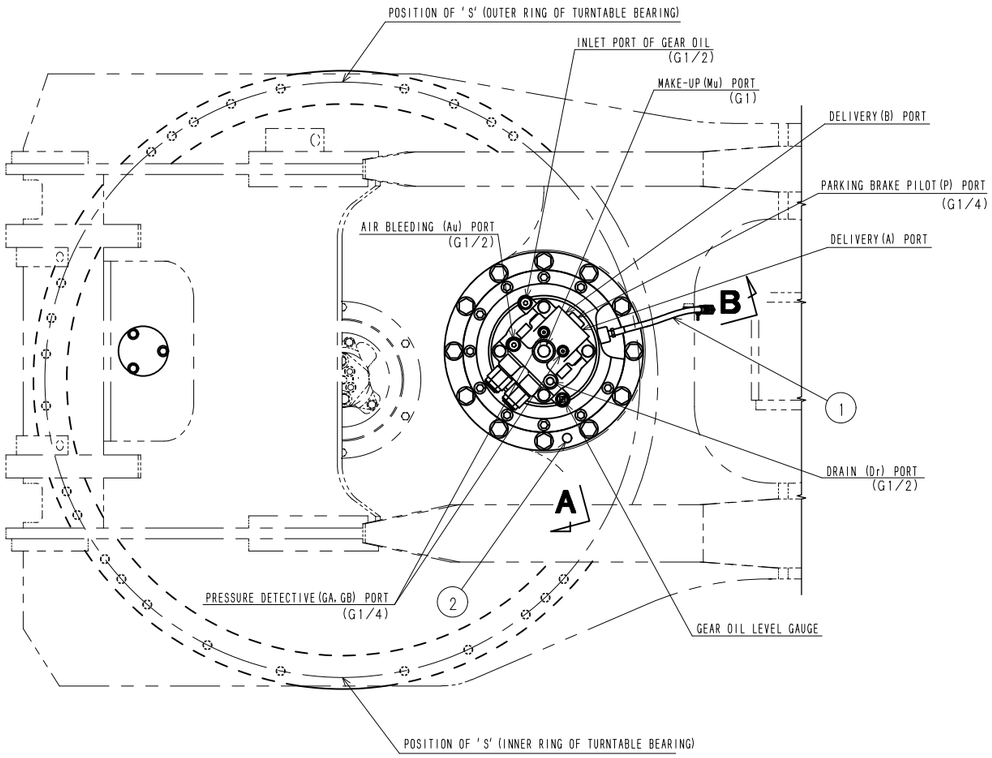

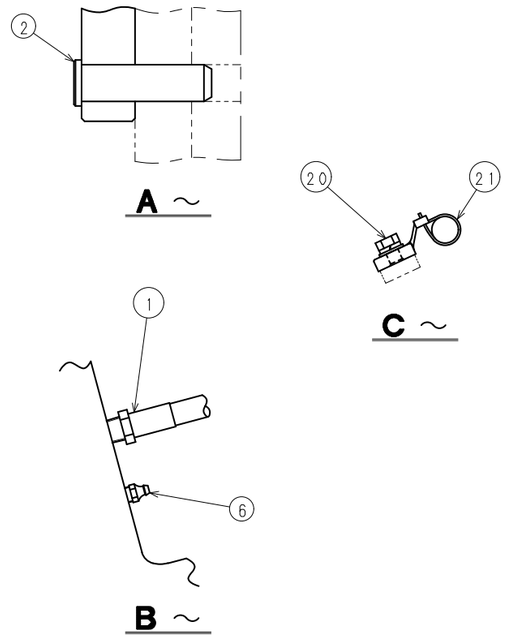

PART NAME	SYMBOL	QTY.
HOSE ASSY	1	1
HEADED PIN	2	1
SEMS BOLT M12x25	3	3
COVER PLATE	4	1
CORK PACKING	5	1
GREASE NIPPLE (A-R1/8)	6	3
HIGH STRENGTH BOLT M24x140	7	41
HIGH STRENGTH WASHER 24	8	41
SEMS BOLT M24x90	9	46
PINION GEAR	10	1
END PLATE	11	1
KEEPER WASHER 125	12	1
HIGH STRENGTH BOLT M16x40	13	2
LOCTITE 262	14	AS NEEDED
LIQUID PACKING 1104	15	AS NEEDED
TURNTABLE BEARING ASSY	16	1
PLUG PF3/8	17	1
SEMS BOLT M24x90	18	12
REDUCTION GEAR	19	1
BOLT M8x25	20	1
CLAMP	21	1

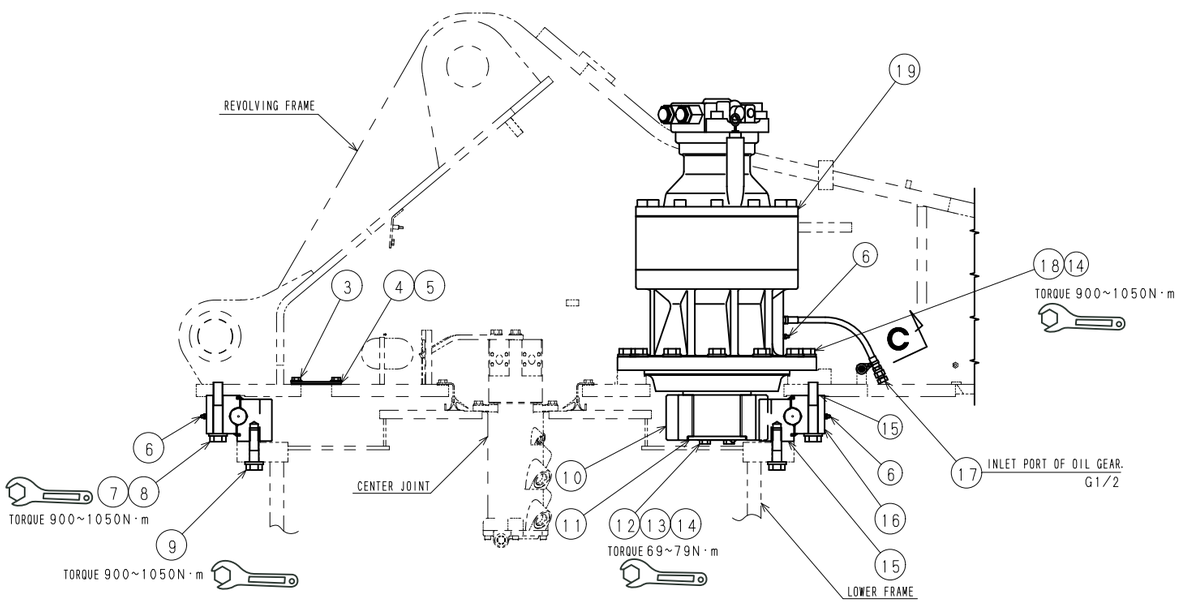

NOTES:

1. THE MOUNTING BOLTS (7), (9), (13) AND (18) SHOULD BE FASTENED TO REQUIRED SPECIFIED TORQUE. PRIOR TO ASSEMBLY, APPLY LOCTITE NO. 262 OR EQUIVALENT TO THE THREADED PORTION OF THE BOLTS (13) AND (18) AFTER DEGREASING THE SURFACE.
2. LIQUID GASKET (THREEBOND 1104) SHOULD BE APPLIED BETWEEN THE TURNTABLE BEARING AND BOTH SWING AND LOWER FRAMES.
3. AFTER ASSEMBLING THE MACHINE OR LONG TERM STORAGE OF THE MACHINE, OPERATE IT AT A LOW SPEED FIRST TO CHECK IF THERE ARE ANY ABNORMAL NOISES OR VIBRATIONS.
4. REMOVE PLUG OF DRAIN PORT AND FILL THE SWING MOTOR CASING WITH HYDRAULIC OIL BEFORE OPERATION. AND THE AIR IN THE SWING MOTOR SHOULD BE BLED OFF FROM AIR BLEEDING PORT.

KSC0229Z-D02

https://truckmanualshub.com/

Upper Mechanism

PART NAME	SYM-BOL	QTY.
SWING MOTOR	1	1
LIQUID PACKING	2	AS NEEDED
REDUCTION GEAR ASSY	3	1

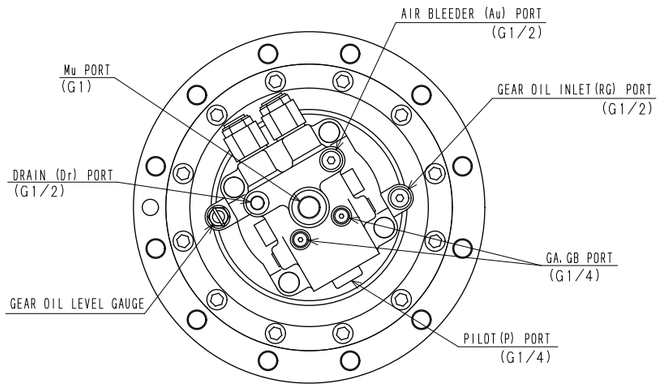

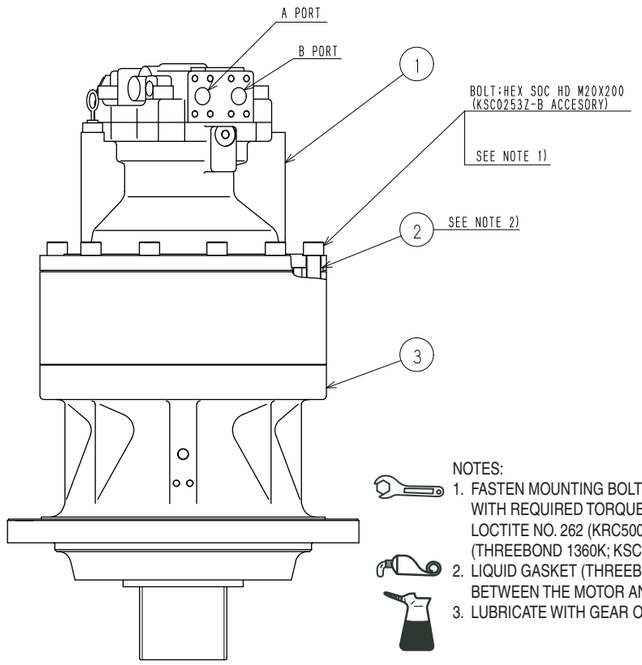

NOTES:
1. FASTEN MOUNTING BOLTS (HEX. SOCKET HEAD BOLTS) TO MOTOR WITH REQUIRED TORQUE OF 568.4 $^{+81}_{0}$N·m. BEFORE FASTENING, APPLY LOCTITE NO. 262 (KRC5007) OR LIQUID GASKET (THREEBOND 1360K; KSC0188) TO THE THREADED PORTION OF THE BOLTS.
2. LIQUID GASKET (THREEBOND 1215; KTF0086) SHOULD BE APPLIED BETWEEN THE MOTOR AND THE REDUCTION GEARS.
3. LUBRICATE WITH GEAR OIL API GL-5 (3.7 L).

KSC0231Z-C04

https://truckmanualshub.com/

	330-5-02-02-24
Upper Mechanism	Page No. 1 / 1
	Second Edition : 04/2006

Engine

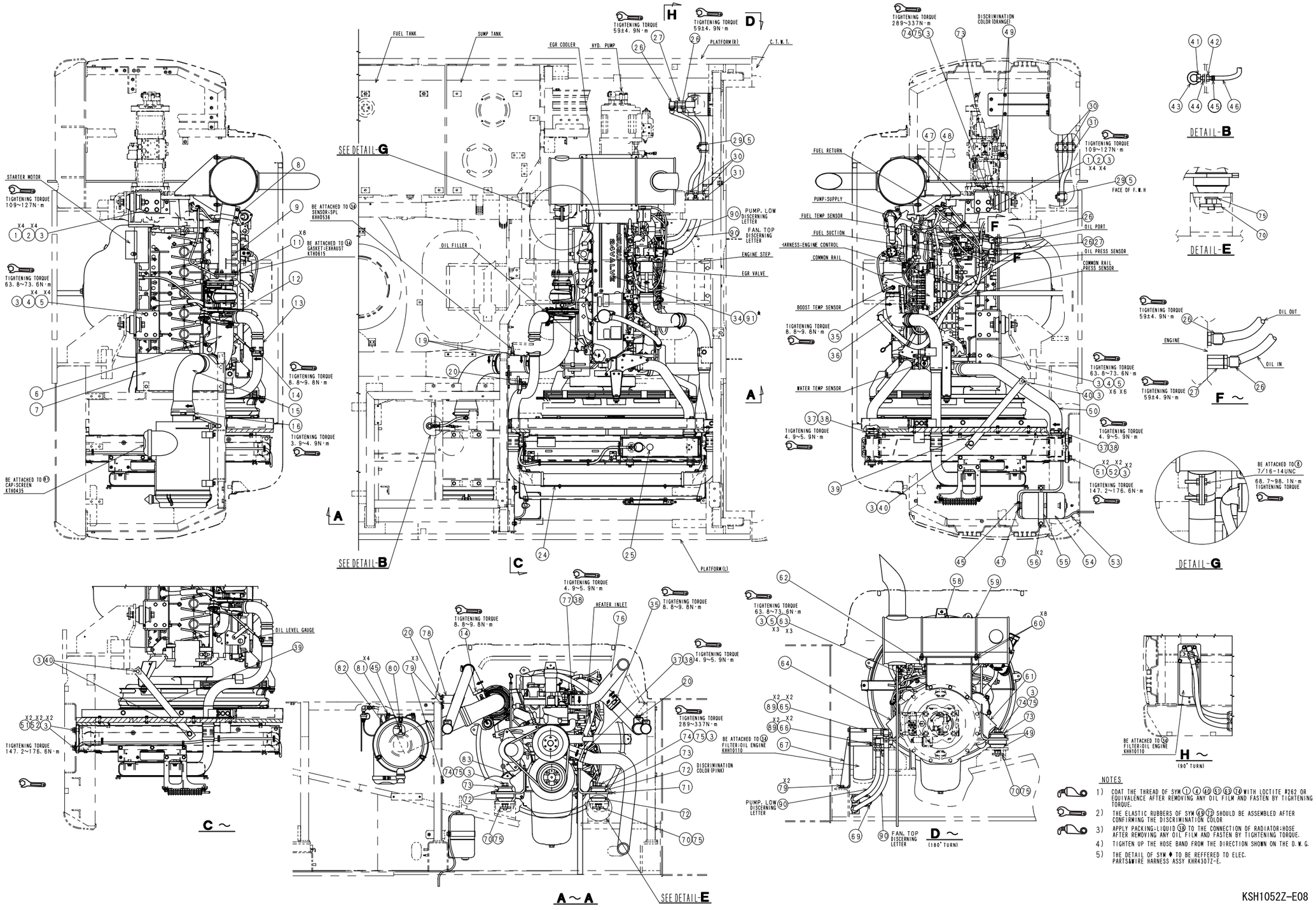

NOTES

1) COAT THE THREAD OF SYM ① ④ ⑩ ⑤1 ⑥3 ⑦4 WITH LOCTITE #262 OR EQUIVALENCE AFTER REMOVING ANY OIL FILM AND FASTEN BY TIGHTENING TORQUE.
2) THE ELASTIC RUBBERS OF SYM ⑥9 ⑦2 SHOULD BE ASSEMBLED AFTER CONFIRMING THE DISCRIMINATION COLOR.
3) APPLY PACKING-LIQUID ⑤8 TO THE CONNECTION OF RADIATOR:HOSE AFTER REMOVING ANY OIL FILM AND FASTEN BY TIGHTENING TORQUE.
4) TIGHTEN UP THE HOSE BAND FROM THE DIRECTION SHOWN ON THE D.W.G.
5) THE DETAIL OF SYM ♦ TO BE REFFERED TO ELEC. PARTS&WIRE HARNESS ASSY KHR4307Z-E.

KSH1052Z-E08

PART NAME	SYM	QTY
HIGH STRENGTH BOLT M12x40	1	8
HIGH STRENGTH WASHER 12	2	8
LOCTITE 262	3	NEED
HIGH STRENGTH BOLT M10x35	4	10
HIGH STRENGTH WASHER 10	5	15
AIR HOSE	6	1
BRACKET	7	1
SEAL CLAMP	8	1
EXHAUST PIPE	9	1
NUT M10x1.25	11	8
JUBILEE CLIP	12	1
AIR HOSE	13	1
HOSE CLAMP	14	2
AIR HOSE	15	1
JUBILEE CLIP	16	1
JUBILEE CLIP	19	2
SEMS BOLT M10x25	20	3
RADIATOR (STD.) ASSY	24	1
LABEL	25	1
ELBOW	26	4
STUD	27	2
HIGH STRENGTH WASHER 10	29	2
HOSE CLAMP	30	4
CLAMP	31	2
DIESEL ENGINE	34	1
HOSE CLAMP	35	2
AIR HOSE	36	1
HOSE CLAMP	37	3
LIQUID PACKING	38	NEED
RADIATOR STAY	39	2
SEMS BOLT M16x40	40	4
ELBOW	41	1
HIGH STRENGTH NUT M10x1.25	42	1
VACUUM SENSOR	43	1
JOINT	44	1
HOSE BAND	45	1
RUBBER HOSE	46	1
HOSE BAND	47	2
TUBE	48	1
ELASTIC RUBBER	49	4
RADIATOR HOSE	50	1
HIGH STRENGTH BOLT M16x30	51	4
HIGH STRENGTH WASHER 16	52	4
VINUL HOSE	53	1
RESERVE TANK	54	1
HOLDER	55	1
SEMS BOLT M10x20	56	2
MUFFLER	58	1
U BOLT	59	2
FLANGED NUT M10	60	8
ENGINE SUPPORT	61	1
MUFFLER BRACKET	62	1
HIGH STRENGTH BOLT M10x50	63	3
ENGINE SUPPORT	64	1
HIGH STRENGTH BOLT M8x110	65	2
HIGH STRENGTH BOLT M8x140	66	2
BRACKET	67	1
RUBBER GROMMET	69	1
NUT	70	4
ENGINE SUPPORT	71	1
ELASTIC RUBBER	72	4
PLATE	73	4
HIGH STRENGTH BOLT M20x150	74	4
HIGH STRENGTH WASHER 20	75	8
RADIATOR HOSE	76	1
HOSE CLAMP	77	1
BRACKET	78	1
SEMS BOLT M12x30	79	5
ELBOW	80	1
SEMS BOLT M10x30	81	4
AIR CLEANER	82	1
ENGINE SUPPORT	83	1
HIGH STRENGTH WASHER 8	89	4
HOSE ASSY	90	1
DIESEL ENGINE	91	1

https://truckmanualshub.com/

Upper Mechanism

Hydraulic Pump

	PORT NAME	PORT SIZE
$A_{1,2}$	DELIVERY PORT	SAE6000psi 1"
B_1	SUCTION PORT	SAE2500psi 2 1/2"
D_{r1}	DRAIN PORT	G 3/4-20
$P_{H1,H2}$	PRESS. SENSOR PORT	G 3/8-17
P_{SV}	SERVO ASSIST PORT	G 1/4-15
$P_{i1,i2}$	NEGATIVE CONTROL PORT	G 1/4-15
$a_{1,2,4}$	GAUGE PORT	G 1/4-15
a_3	GAUGE PORT	G 1/4-14
A_3	GEAR PUMP DELIVERY PORT	G 1/2-19
B_3	GEAR PUMP SUCTION PORT	G 3/4-20.5
D_{r3}	GEAR PUMP DRAIN PORT	G 3/8-15

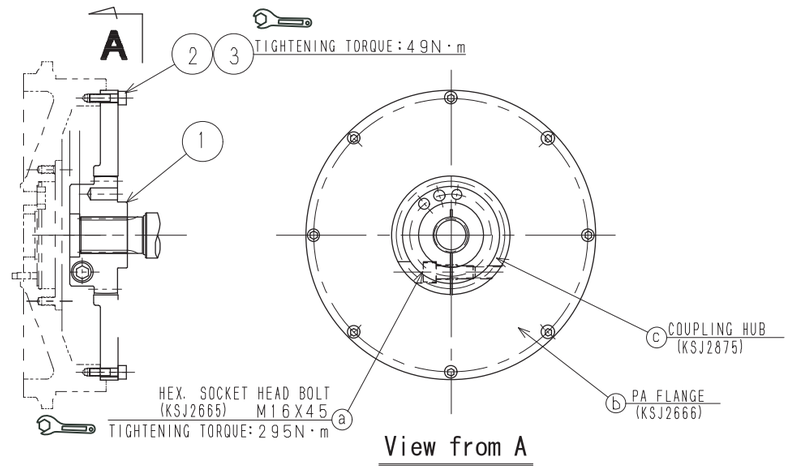

DETAIL OF COUPLING INSTALLMENT

DESCRIPTION	SYMBOL	QTY
CPLG:PUMP	1	1
BOLT:HEX SOC HD M10X35	2	8
BOND 262	3	NEED
FLANGE:SPL	4	1
BOLT:HEX SOC HD	5	4
PUMP:HYD	6	1
BOLT:HIGH STRENGTH M10X40	7	9
WASHER:HIGH STRENGTH	8	9
GROMMET:RUBBER	9	2

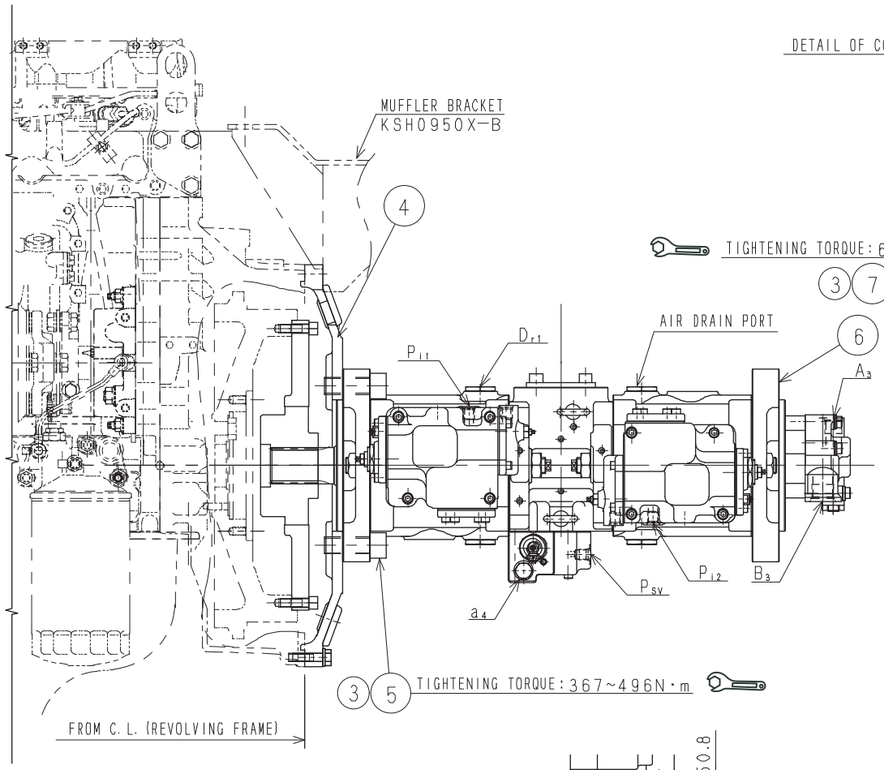

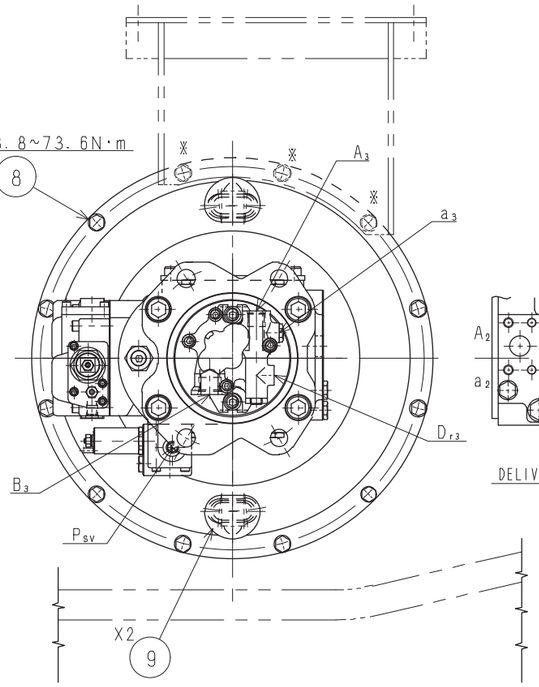

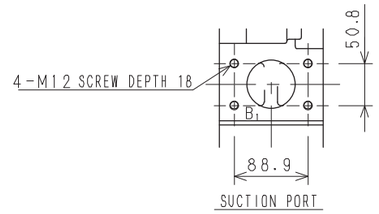

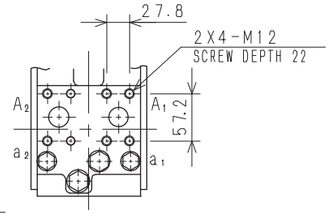

NOTES

1) AFTER ASSEMBLED THE MACHINE OR LONG TERM STORAGE OF THE MACHINE, FILLED INSIDE OF THE PUMP WITH THE HYDRAULIC OIL FROM Dr PORT (AIR-BLEEDING PORT).
2) BOLTS INDICATED WITH THE MARK ※, ARE INCLUDED IN THE ENGINE ASSEMBLY DRAWING. (THEY ARE USED FOR THE PUMP AND FOR THE MUFFLER BRACKET 3 POINT).
3) THE PUMP SHAFT AND FLANGE SURFACES SHOULD BE CLEANED. (FOR REMOVING ANTI-RUST MATERIAL)

PROCEDURE OF ASSEMBLING

1. PROCEDURE TO FIX THE COUPLING HUB ON THE PUMP SHAFT.
   a. ADJUST THE HUB FACE(SPOT FACING) AND SPLINE SHAFT END TO SAME SURFACE.
   b. FIX ⓒ COUPLING HUB(KSJ2875) BY TIGHTENING THE ⓐ HEX. SOCKET HEAD BOLT(KSJ2665).
      TIGHTENING TORQUE 295N·m
2. PROCEDURE TO FIX FLANGE TO THE ENGINE FLYWHEEL.
   a. APPLY LOCTITE #262 ③ OR EQUAL ON THE FEMALE THREAD OF FLYWHEEL.
   b. FIX ⓑ PA FLANGE(KSJ2666) BY TIGHTENING THE ② HEX. SOCKET HEAD BOLT.
      TIGHTENING TORQUE 49N·m
3. PROCEDURE TO FIX THE PUMP TO THE ENGINE.
   a. FIT THE PIN AND COUPLING HOLE AND INSTALL THE PUMP ON ENGINE AT THE LEVEL.
   b. TIGHTEN THE BOLTS ⑦ . WASHER ⑧ TIGHTENING TORQUE 63.8~73.6N·m.

KSJ2975Z-C03

https://truckmanualshub.com/

Upper Mechanism

Control Valve

	DESCRIPTION	SYMBOL	QTY.
	BRACKET	1	1
	SEMS BOLT M16x40	2	8
	LOCTITE 262	3	AS NEEDED
※	CONTROL VALVE	4	1
★	CONTROL VALVE HBCV	5	1

CONTROL VALVE PORTS

LINE NAME	MAIN PORT	LINE NAME	MAIN PORT
BUCKET OPEN LINE	B7	OPTION CONFLUENCE LINE	P3, P4
BUCKET CLOSED LINE	A7	RETURN LINE	T1, T2
BOOM DOWN LINE	B8	NEGATIVE CONTROL	ps1, ps2
BOOM UP LINE	A8	TRUCTION PRESSURE NEASUREMENT	PT
TRAVEL LEFT FORWARD LINE	A6	RAISED PRESSURE	PH
TRAVEL LEFT BACKWORD LINE	B6	ATTACHMENT PRESSURE MEASUREMENT	PP, PA
ARM OUT LINE	A5	DRAIN	DR
ARM IN LINE	B5	LOAD HOLDING AT ARM	pc1
SWING RIGHT LINE	B3	LOAD HOLDING AT BOOM	pc2
SWING LEFT LINE	A3	BYPASS FILTER	T4
OPTION LINE	A2	HEAT LINE	T5
OPTION LINE	B2	SWING MOTOR MAKE-UP	T3
TRAVEL RIGHT FORWARD LINE	A1	SWING PRIORITY (ARM)	pc3, pc3'
TRAVEL RIGHT BACKWARD LINE	B1	SWING PRIORITY RELEASE	pbu
PRESSURE LINE	P1, P2		

NOTE:
1. LOCTITE #262 OR EQUAL SHOULD BE APPLIED ON THE THREAD OF THE BOLTS AFTER REMOVING THE OIL FILM.

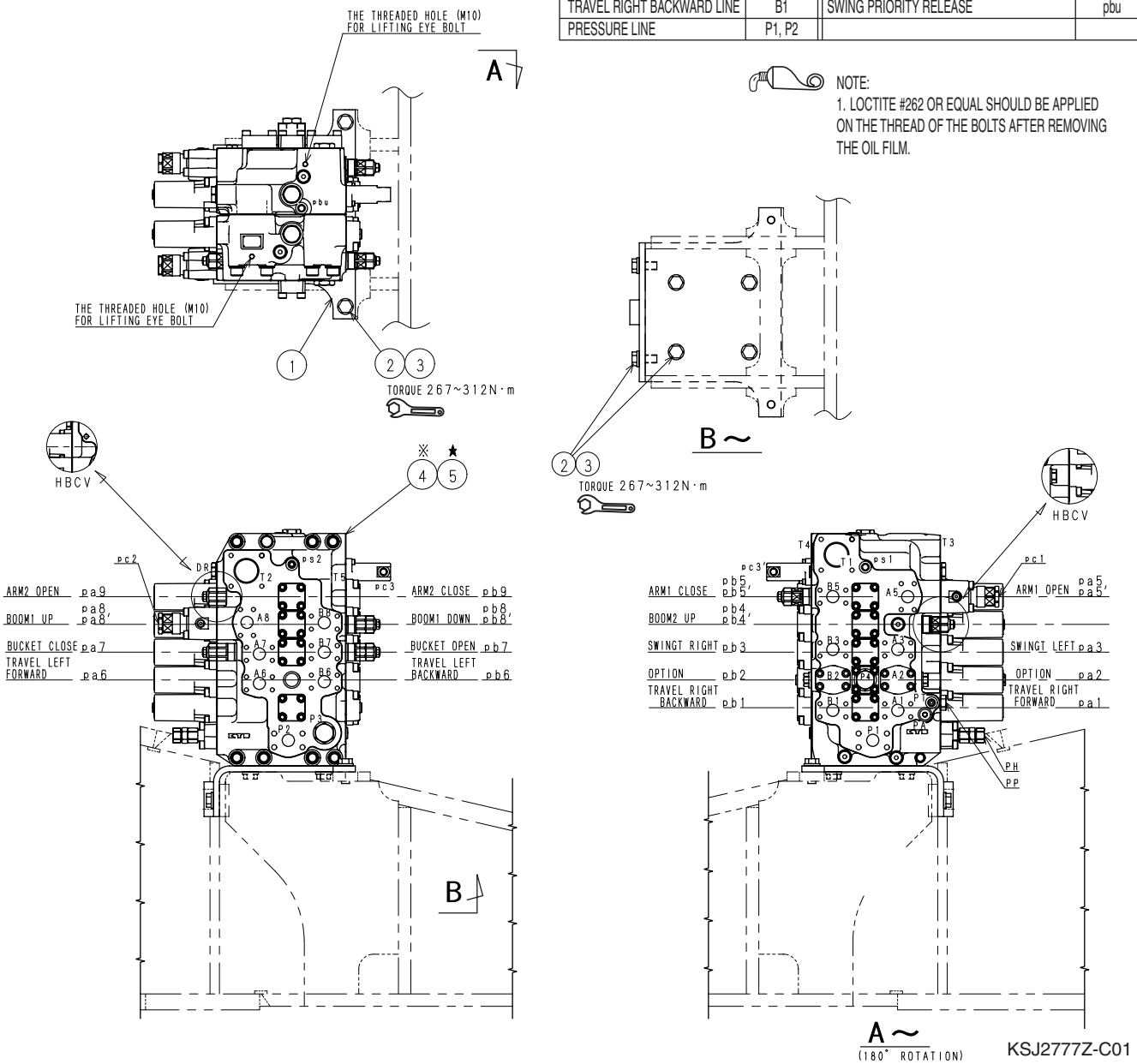

	000-5-02-05-09
Upper Mechanism	Page No. 1 / 1
	Second Edition : 04/2006

Remote Control Valve

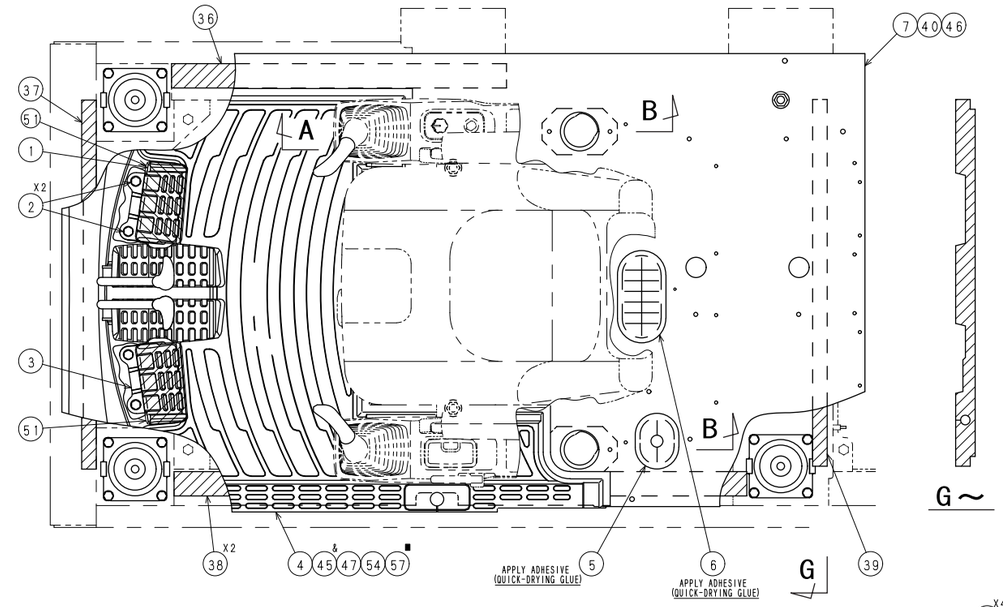

PROCEDURE FOR ASSEMBLING AND ADJUSTING THE GUARD:HOSE.

WHEN ATTACH THE GUARD:HOSE⑫ TO BRACKET HOSE GUARD⑬, SHOULD BE ADJUSTED THE DISTANCE BETWEEN EDGE OF GUARD HOSE ⑫ AND BRACKET HOSE GUARD⑬. THE DISTANCE IS 20~25mm.

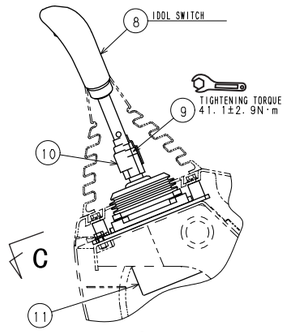

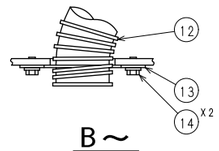

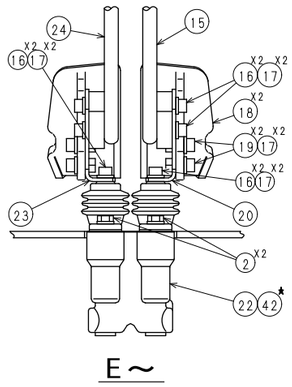

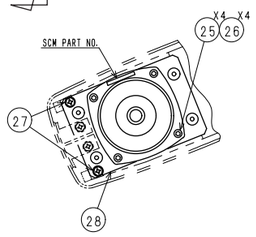

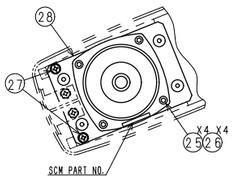

NOTES

1) ㊱㊲㊳㊴ PASTE SEAL;CUSHION ON THE PLATFORM.
2) SYM※㊶ VALVE;REMOTECONT. IS USED FOR THE MODEL WITH 2WAY SELECTR.
3) SYM★㊷ VALVE;REMOTE CONT. IS USED FOR SH120-3(RV)MODEL.
4) SYM#㊸ RUBBER;MOUNT ARE USED FOR SH120-3 RV MODEL.
5) SYM&㊺ MAT FLOOR IS USED FOR CRANE MODEL.
6) ※LABEL;WARNING FOR MODELS MARKED ※ IS INCLUDED IN UG NAME PLATE.
7) ◇LABEL;OPR. AND HOLDER ARE USED FOR 2WAY MODELS.
8) SYM■㊼ MAT FLOOR IS USED FOR HR MODEL.

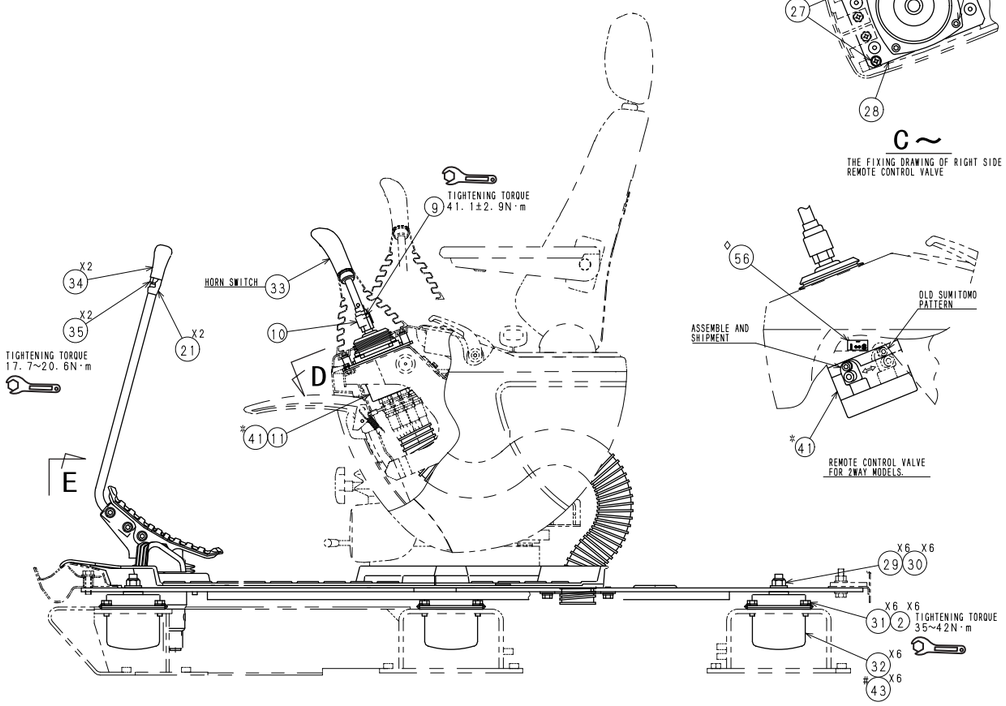

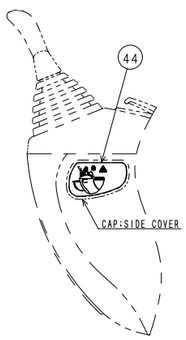

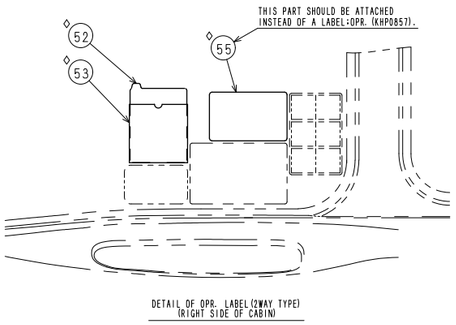

KRJ6188Z-E25

	PART NAME	SYM	QTY
	FOOT REST (R)	1	1
	SEMS BOLT M10X25	2	32
	FOOT REST (L)	3	1
	FLOOR MAT (STANDARD)	4	1
	RUBBER GROMMET	5	1
	RUBBER GROMMET	6	1
	FLOOR	7	1
	KNOB (R)	8	1
	JAM NUT M14	9	2
	VINYL CAP	10	2
	REMOTE CONTROL VALVE	11	2
	HOSE GUARD (L = 820)	12	2
	HOSE GUARD BRACKET	13	2
	SEMS BOLT M8X16	14	4
	TRAVEL LEVER (LEFT)	15	1
	HEXAGON SOCKET HEAD BOLT M10X20	16	8
	HIGH STRENGTH WASHER 10	17	12
	PEDAL	18	2
	HEXAGON SOCKET HEAD BOLT M10X25	19	4
	PEDAL BRACKET (LEFT)	20	1
	TRAVEL KNOB CAP	21	2
	REMOTE CONTROL VALVE	22	1
	PEDAL BRACKET (RIGHT)	23	1
	TRAVEL LEVER (RIGHT)	24	1
	HEXAGON SOCKET HEAD BOLT M6X25	25	8
	QUADRATE SPRING WASHER 6	26	8
	HIGH STRENGTH BOLT M6X16 (BUILT-IN WASHER)	27	4
	REMOTE CONTROL VALVE BRACKET	28	2
	U-NUT	29	6
	SPECIAL WASHER	30	6
	LOCTITE 262	31	AS NEEDED
	MOUNTING RUBBER (FLUID)	32	6
	KNOB (L)	33	1
	TRAVEL KNOB	34	2
	HIGH STRENGTH NUT M12X1.25	35	2
	CUSHION SEAL	36	1
	CUSHION SEAL	37	1
	CUSHION SEAL	38	2
	CUSHION SEAL	39	1
☆	FLOOR	40	1
※	REMOTE CONTROL VALVE (WITH 2-WAY SELECTOR)	41	1
☆	REMOTE CONTROL VALVE (TRAVEL)	42	1
#	MOUNTING RUBBER (FLUID)	43	6
	WARNING LABEL, GATE LOCK	44	1
&	FLOOR MAT (CRANE)	45	1
	FLOOR	46	1
	FLOOR MAT (BLADE)	47	1
	VINYL COVER (FOOT REST)	51	2
◇	2-WAY OPERATION LABEL	52	1
◇	OPERATION LABEL HOLDER	53	1
	FLOOR MAT (STANDARD, FOR EXTINGUISHER-EQUIPPED MODEL)	54	1
◇	CAUTION LABEL	55	1
◇	INST LABEL	56	1
■	FLOOR MAT	57	1

https://truckmanualshub.com/

	000-5-02-06-06
Upper Mechanism	Page No. 1 / 1
	Third Edition : 11/2005

Operator's Cab

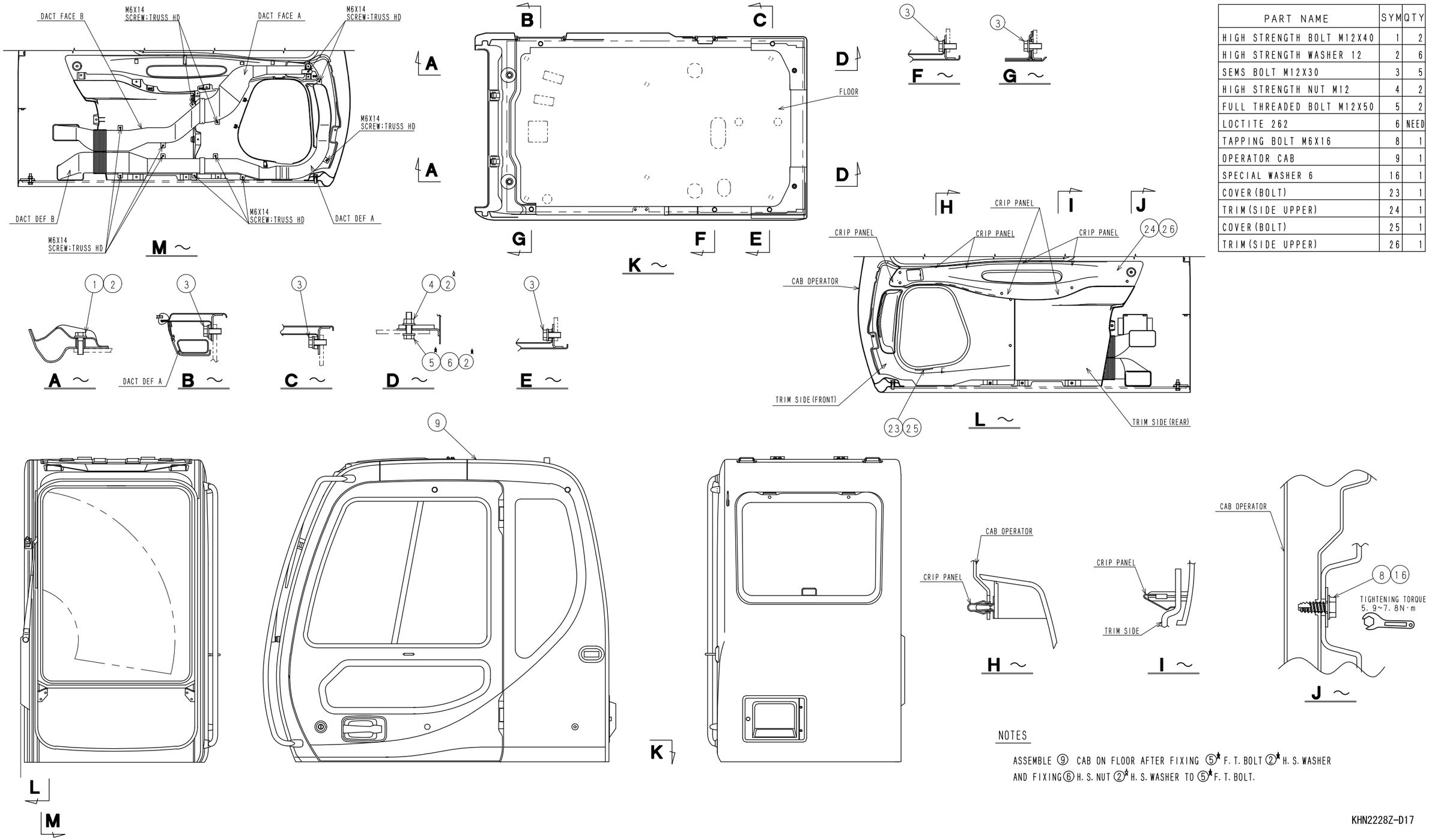

PART NAME	SYM	QTY
HIGH STRENGTH BOLT M12X40	1	2
HIGH STRENGTH WASHER 12	2	6
SEMS BOLT M12X30	3	5
HIGH STRENGTH NUT M12	4	2
FULL THREADED BOLT M12X50	5	2
LOCTITE 262	6	NEED
TAPPING BOLT M6X16	8	1
OPERATOR CAB	9	1
SPECIAL WASHER 6	16	1
COVER(BOLT)	23	1
TRIM(SIDE UPPER)	24	1
COVER(BOLT)	25	1
TRIM(SIDE UPPER)	26	1

NOTES

ASSEMBLE ⑨ CAB ON FLOOR AFTER FIXING ⑤★ F. T. BOLT ②★ H. S. WASHER AND FIXING ⑥ H. S. NUT ②★ H. S. WASHER TO ⑤★ F. T. BOLT.

KHN2228Z-D17

https://truckmanualshub.com/

Bucket Cylinder Removal and Installation

1. Removal

1	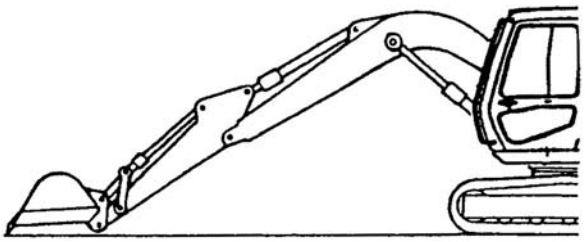	Lower the attachment to the ground.
2	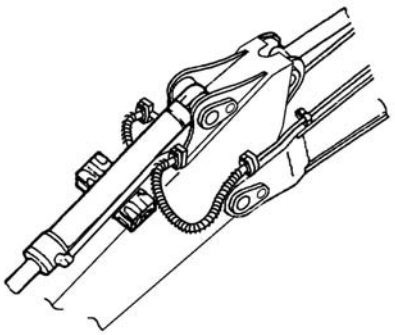	Put a block between the bucket cylinder and the arm.
3	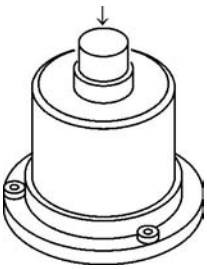 UPPER SIDE OF HYDRAULIC OIL TANK	Stop the engine and release pressure in the hydraulic circuit. Note: Refer to the procedures for bleeding the hydraulic pressure in *Precautions for Use in Chapter 0 .* When releasing pressure from the tank, stop the engine and press the button to completely release the internal pressure. The hydraulic oil may be hot, so be careful not to get burned.
4	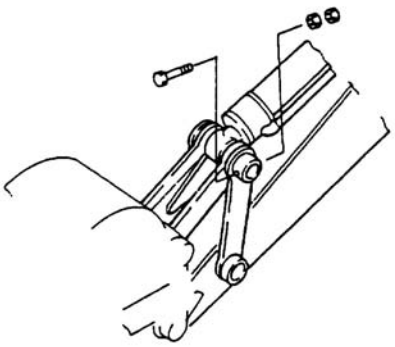	Remove the nuts and bolt.

https://truckmanualshub.com/

5	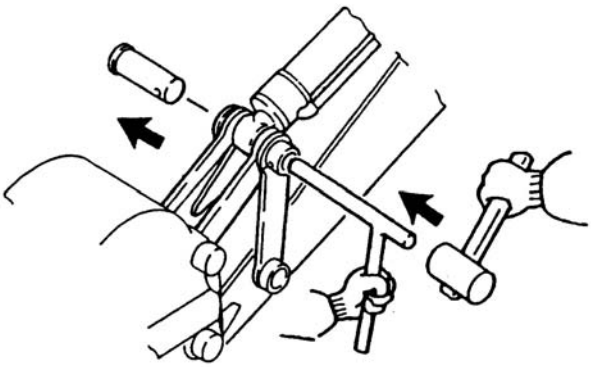	Drive out the pin, using a steel bar and hammer.
6	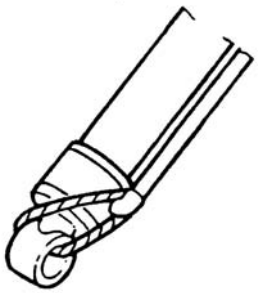	Fasten a wire to prevent the cylinder rod from extending.
7	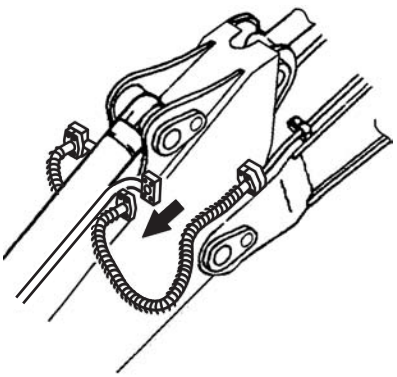	Remove the hoses. Install bull plugs.
8	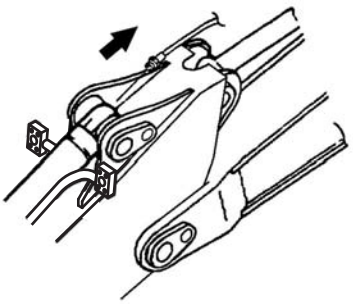	Remove the grease hose.

https://truckmanualshub.com/

9	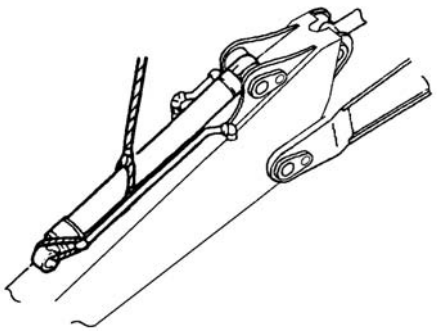	Lift the bucket cylinder, using a sling.
10	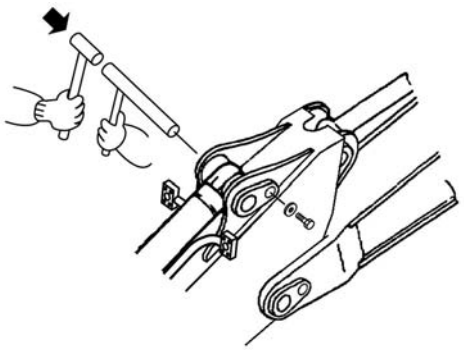	Remove the bolt and spacer. Drive out the pin, using a steel bar and hammer. Remove the bucket cylinder.

https://truckmanualshub.com/

2. Installation

1	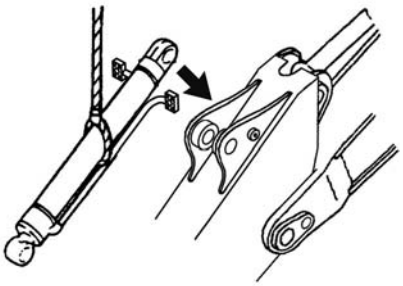	Lift the bucket cylinder and position it so that it is aligned for installation in the arm.
2	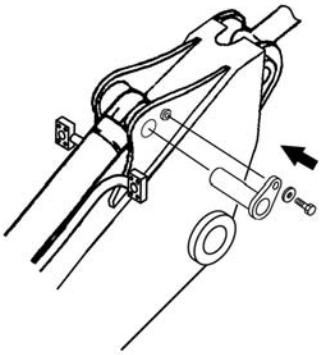	Install the pin and fasten it with a bolt and spacer. When putting in a pin, it unites with the circle boss of a arm.
3	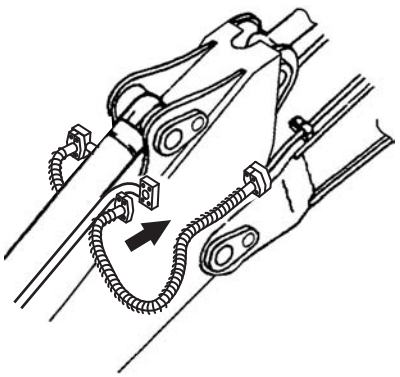	Connect the hoses to the bucket cylinder.
4	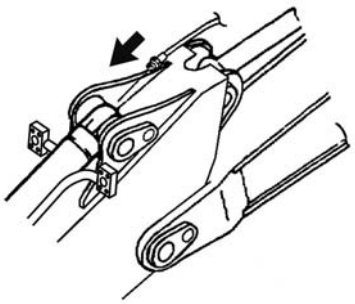	Install the grease hose to the bucket cylinder.

https://truckmanualshub.com/

5	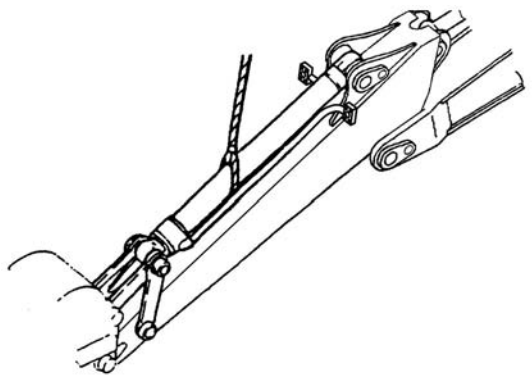	Position the cylinder head so that it is aligned for installation in the link.
6	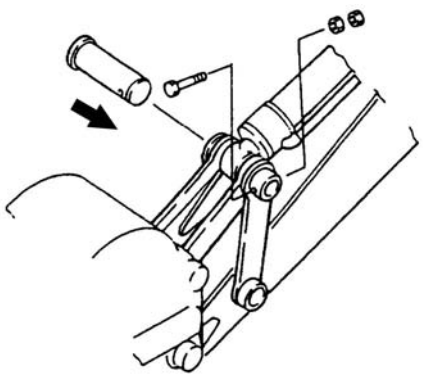	Install the pin and fasten it with a bolt and nuts. Note: Cycle the cylinder to bleed air from the cylinder. After leading air, check for oil leakage.

https://truckmanualshub.com/

Arm Cylinder Removal and Installation

1. Removal

1	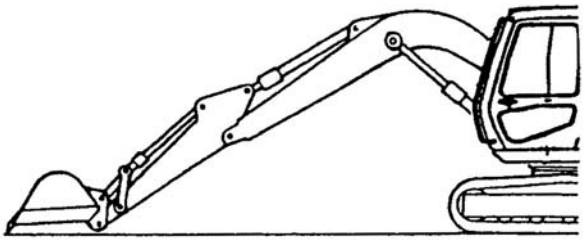	Lower the attachment to the ground.
2	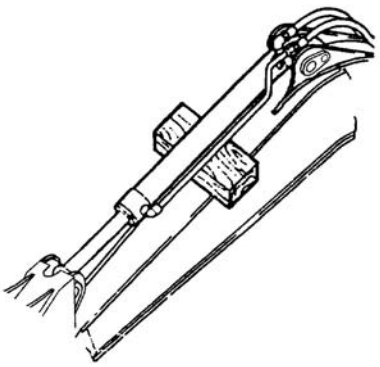	Put a block between the arm cylinder and the boom.
3	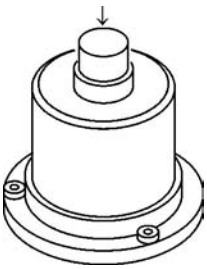 UPPER SIDE OF HYDRAULIC OIL TANK	Stop the engine and release pressure in the hydraulic circuit. Note: Refer to the procedures for bleeding the hydraulic pressure in *Precautions for Use in Chapter 0* . When releasing pressure from the tank, stop the engine and press the button to completely release the pressure. The hydraulic oil may be hot so be careful not to get burned.
4	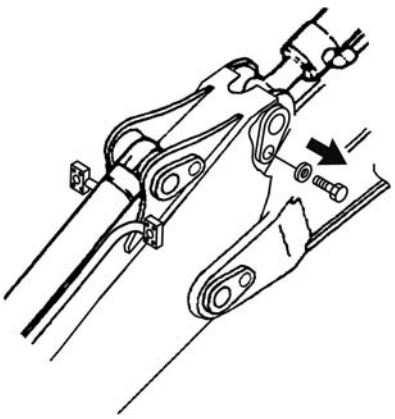	Remove the bolt and spacer.

https://truckmanualshub.com/

5	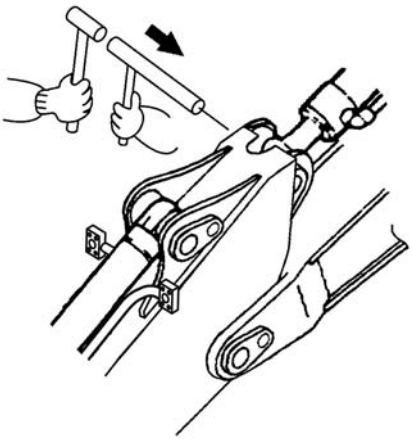	Drive out the pin, using a steel bar and hammer.
6	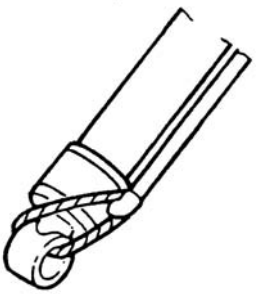	Fasten a wire to prevent the cylinder rod from extending.
7	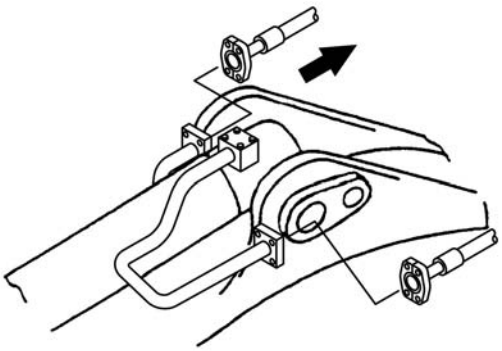	Remove the hoses. Install bull plugs.
8	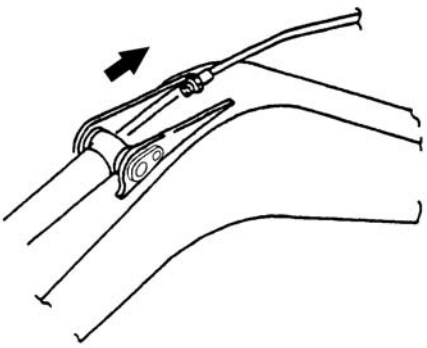	Remove the grease hose.

https://truckmanualshub.com/

9	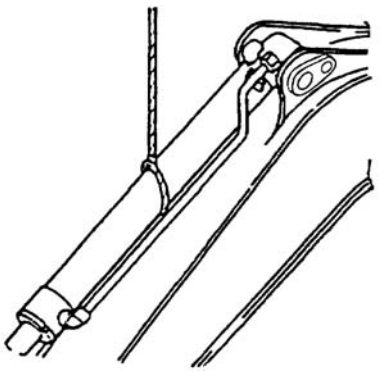	Lift the arm cylinder, using a sling.
10	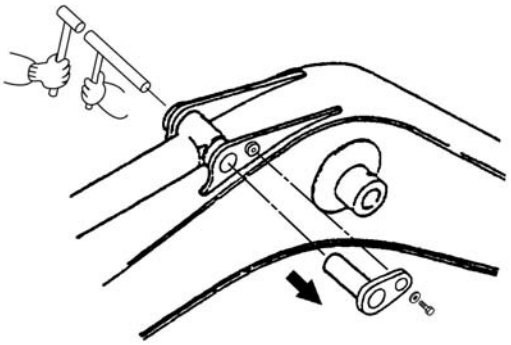	Remove the bolt and spacer. Drive out the pin, using a steel bar and hammer. Remove the arm cylinder.

https://truckmanualshub.com/

2. Installation

1	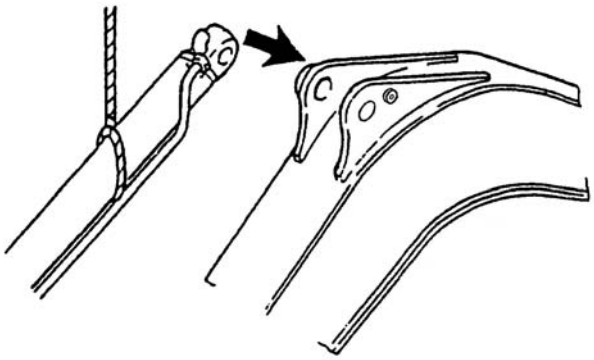	Lift the arm cylinder and position it so that it is aligned for installation in the boom.
2	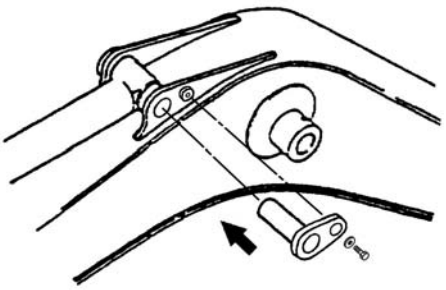	Install the pin and fasten it with a bolt and spacer. When putting in a pin, it unites with the circle boss of a arm.
3	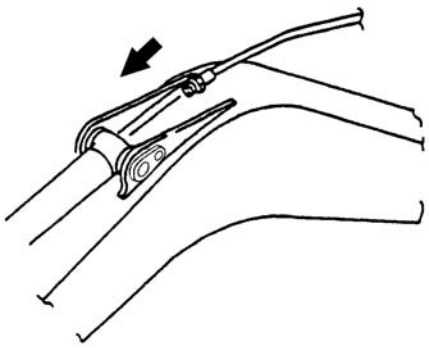	Install the grease hose to the arm cylinder.
4	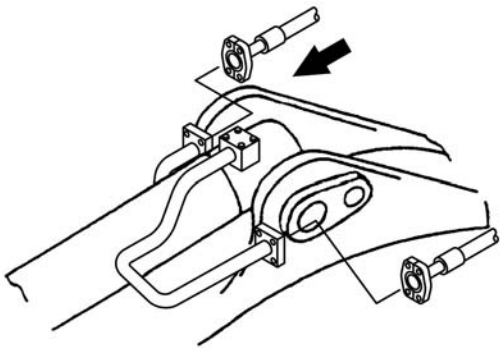	Connect the hoses to the arm cylinder.

https://truckmanualshub.com/

5	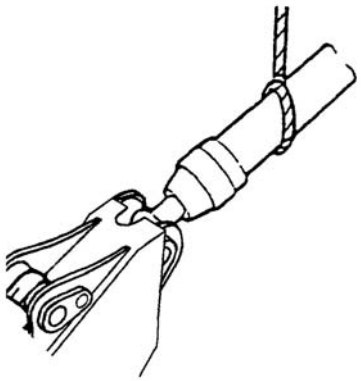	Position the cylinder head so that it is aligned for installation in the arm.
6	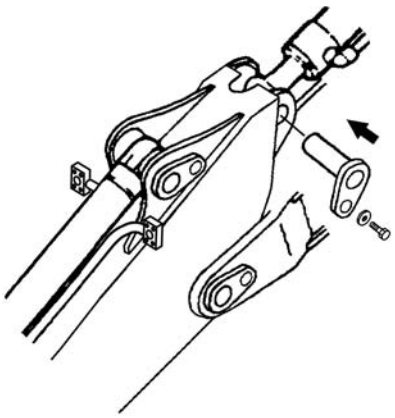	Install the pin and fasten it with a bolt and spacer. When putting in a pin, it unites with the circle boss of a arm. Note: Cycle the cylinder to bleed air from the cylinder. After bleeding air, check for oil leakage.

https://truckmanualshub.com/

Boom Cylinder Removal and Installation

1. Removal

1	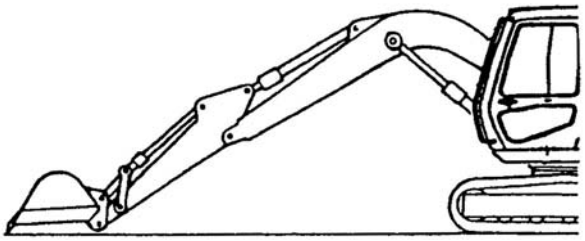	Lower the attachment to the ground.
2	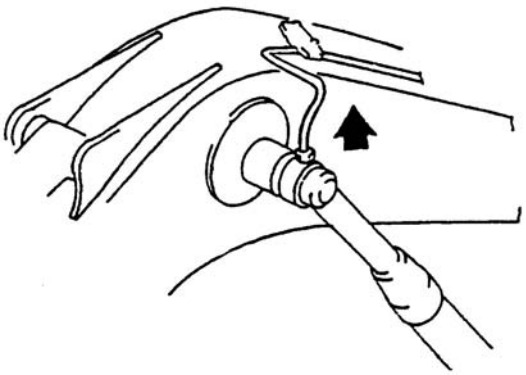	Remove the grease hose.
3	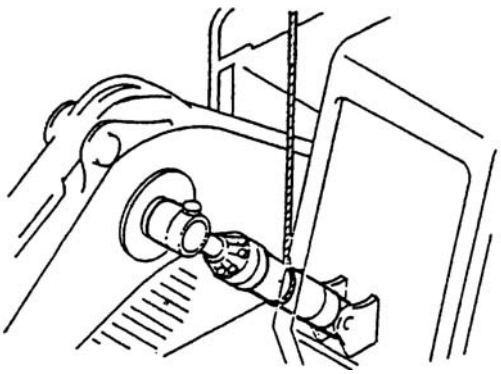	Attach a sling to the boom cylinder.
4	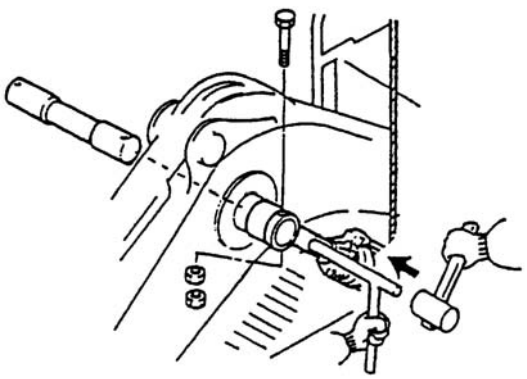	Remove the nuts and bolt to remove the collar. Pull out the pin, using a steel bar and hammer.

https://truckmanualshub.com/

5	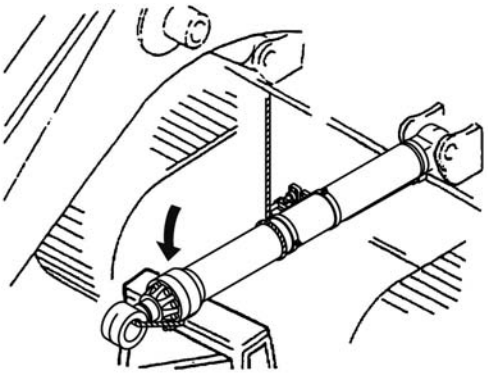	Lower the cylinder and place on a stand.
6	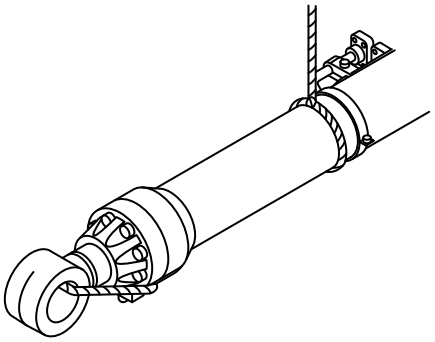	Attach a wire to prevent the cylinder rod from extending.
7	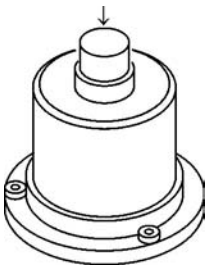 UPPER SIDE OF HYDRAULIC OIL TANK	Stop the engine and release pressure in the hydraulic circuit. Note: Refer to the procedures for bleeding the hydraulic pressure in *Precautions for Use in Chapter 0* . When releasing pressure from the tank, stop the engine and press the button to completely release the pressure. The hydraulic oil may be hot so be careful not to get burned.
8	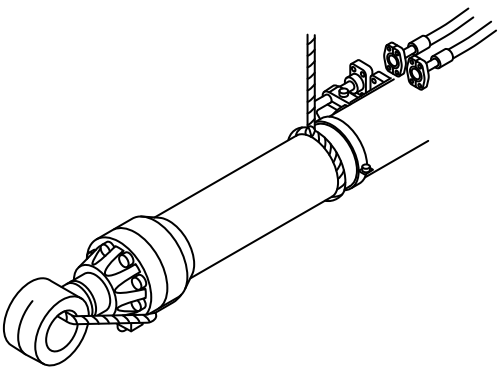	Remove the hoses. Install bull plugs.

https://truckmanualshub.com/

9	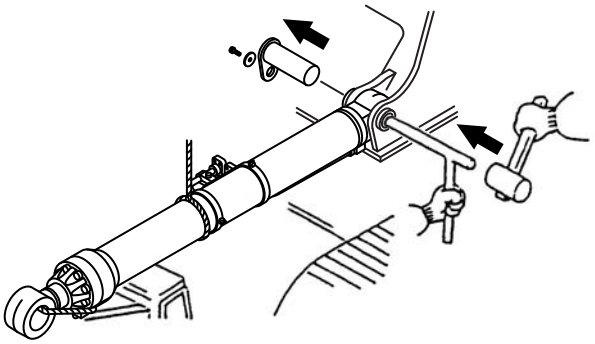	Remove the bolt and spacer. Drive out the pin, using a steel bar and hammer.
10	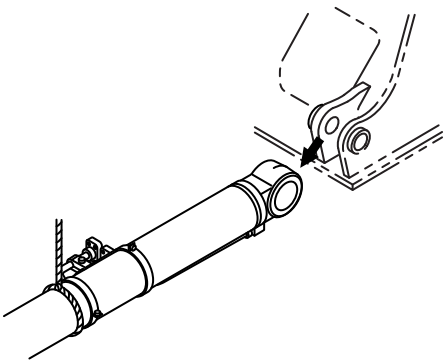	Remove the boom cylinder.

https://truckmanualshub.com/

2. Installation

1	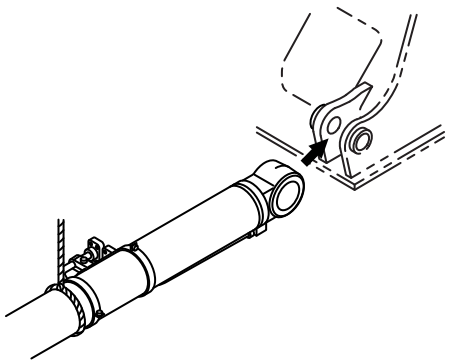	Lift the boom cylinder and position it so that it is aligned for installation in the frame.
2	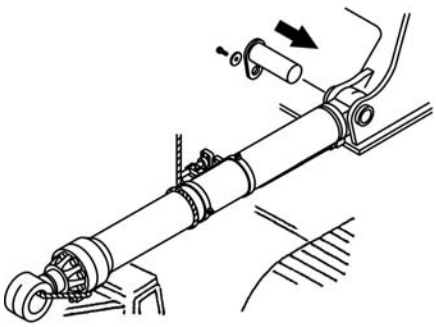	Install the pin and fasten it with a bolt and spacer. When putting in a pin, it unites with the circle boss of a frame.
3	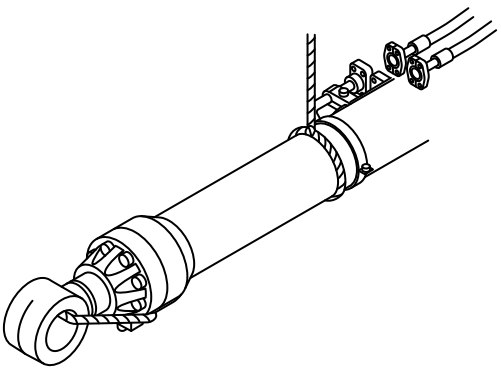	Connect the hoses to the boom cylinder.
4	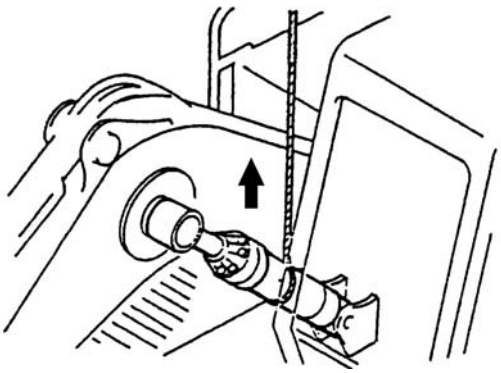	Position the cylinder so that the head is aligned for installation in the boom.

https://truckmanualshub.com/

5	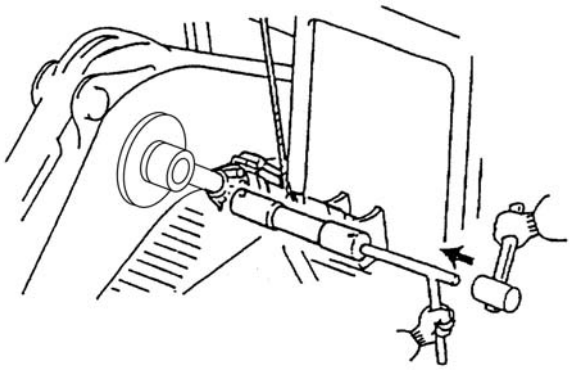	Install a pin with a steel bar and hammer.
6	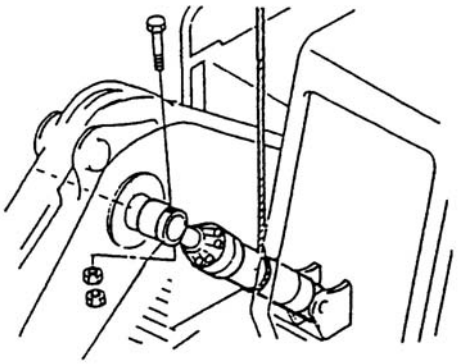	Attach the collar and install the bolt and nuts.
7	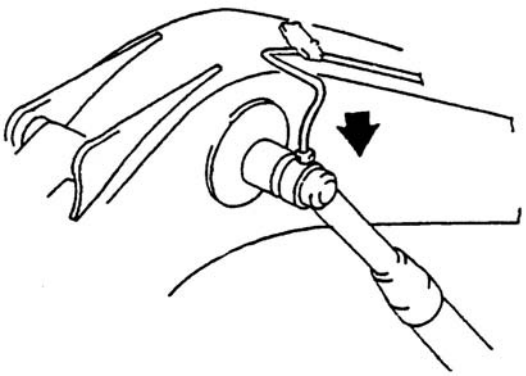	Connect the grease hose. Note: Cycle the cylinder to bleed air from the cylinder. After bleeding air, check for oil leakage.

https://truckmanualshub.com/

Take-up Roller

Disassembling and Assembling Instructions

1. Component Diagram

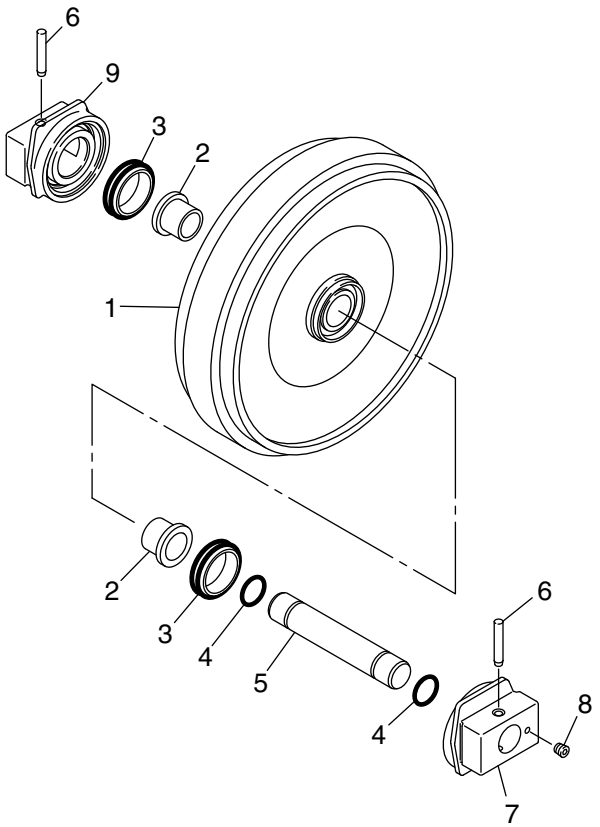

SYMBOL	PART NAME
1	TAKE-UP ROLLER
2	BUSHING
3	FLOATING SEAL
4	O-RING
5	SHAFT
6	HUB PIN
7	HUB (WITH PLUG)
8	PLUG
9	HUB (WITHOUT PLUG)

2. Tools and Jigs

(1) Tools

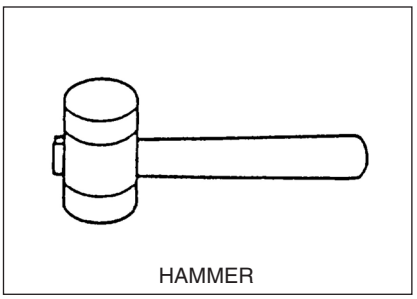
HAMMER

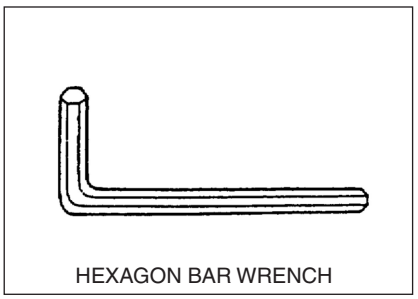
HEXAGON BAR WRENCH

(2) Jigs

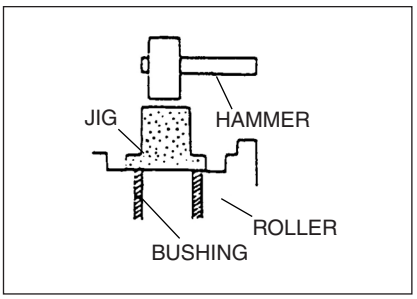

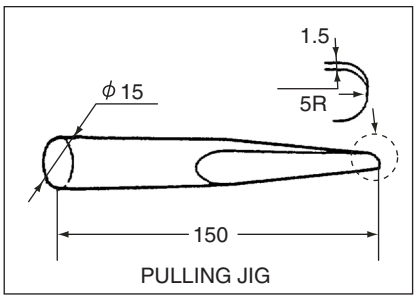

PULLING JIG

https://truckmanualshub.com/

3. Disassembling Instructions

(1) Preparation

Prior to disassembly, take full preparatory measures.

[1] Workbench with vises
Prepare a suitable workbench large enough to arrange and keep parts and perform the work.

[2] Tools and Jigs
For tools and jigs, refer to the previous section.

(2) General cautions

[1] Handle precision parts carefully during the operation; do not drop or hit them on other parts during the operation.

[2] Do not attempt to finish the operation quickly; do not forcedly pry or hit the parts.
Perform the operation carefully and patiently in order to prevent parts deformation, oil leakage and lower efficiency.

[3] As disassembled parts tend to get rusted or collect dust and dirt, dust proof and rust prevention treatment should be applied immediately after disassembling the parts.

(3) Disassembling procedure

1	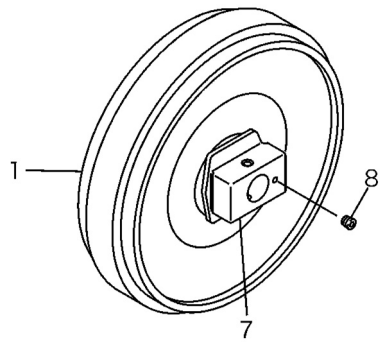	1. Clean the take-up roller with kerosene. 2. Remove the plug (8) from the hub (7) to drain the oil.
2	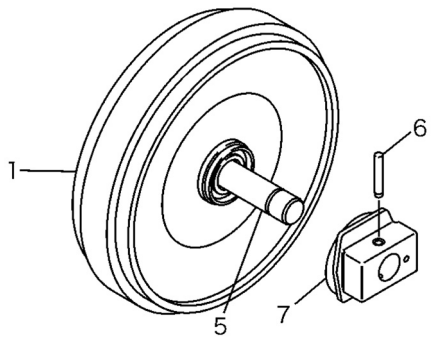	1. Remove the hub pin (6) from the shaft (5) (or hub (7)). The removal is to be performed on one side only. 2. Remove the hub (7) from the shaft (5). The removal is to be performed on one side only.

https://truckmanualshub.com/

3	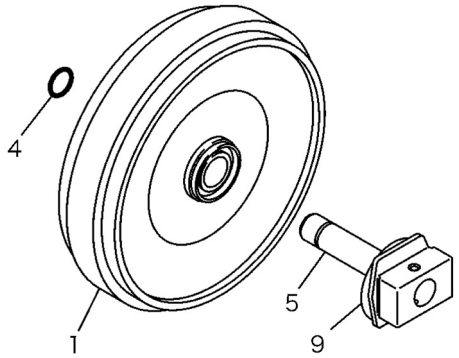	1. Remove the O-ring (4) from the shaft (5). 2. Pull out the shaft (5) from the take-up roller (1).
4	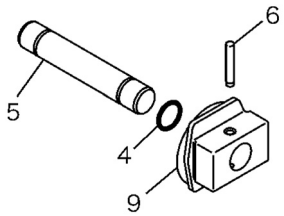	1. Remove the hub pin (6) from the shaft (5) (or hub (9)). 2. Remove the hub (9) from the shaft (5). 3. Remove the O-ring (4) from the shaft (5).
5	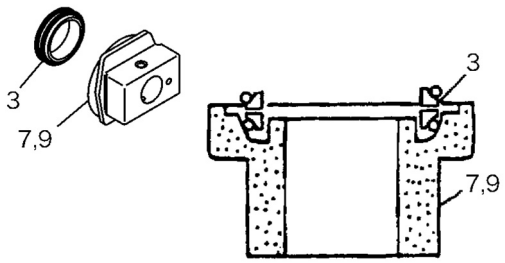	Remove the floating seals (3) from the hubs (7),(9).
6	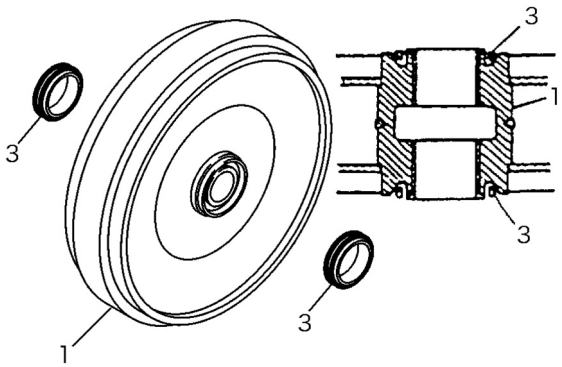	Remove the floating seals (3) from the take-up roller (1).

https://truckmanualshub.com/

7	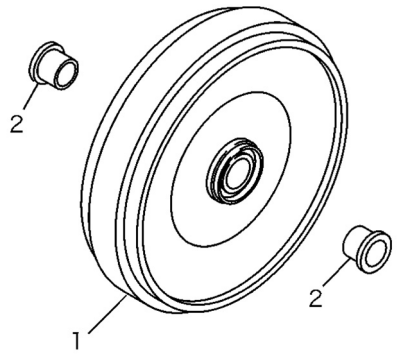	Remove the bushings (2) from the take-up roller (1) using pulling jigs, press and other instruments. ※ Do not attempt to disassemble bushings (2) unless they are unusable due to wear.
8	Cleaning Parts 1. Preparatory cleaning 1) Place parts in the preparatory cleaning container containing cleaning oil. ※ Wash off deposited substances which may cause scratches. Leave the parts submerged in the kerosene until the dirt and grease come off and float up.	2. Finish cleaning 1) Put the parts in the finish cleaning container containing cleaning oil and wash them by slowly moving them. 2) Wipe off remaining cleaning oil with clean cloth. ※ Place the parts somewhere free of dust and moisture, and dry them using compressed air. After drying, apply engine oil to the parts.

4. Assembling instructions

(1) Prior to assembly:

- Clean all the parts.
- Polish scratches, flashes or burrs using oil stones.
- Change sealing parts such as O-rings with new ones.

(2) Assembling procedure

1	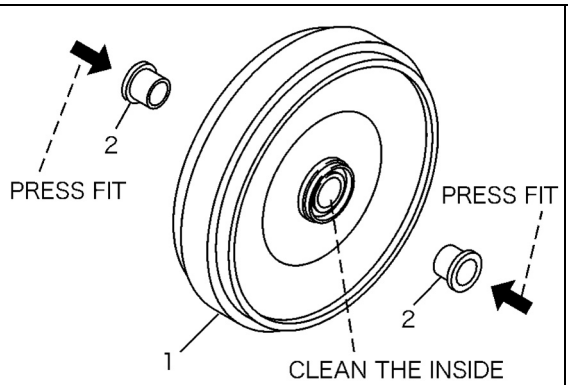	Install bushings (2) to the take-up roller (1) using a jig and hammer Note: Pay full attention when inserting the bushings (2) by hammering. Do not reuse bushings (2). 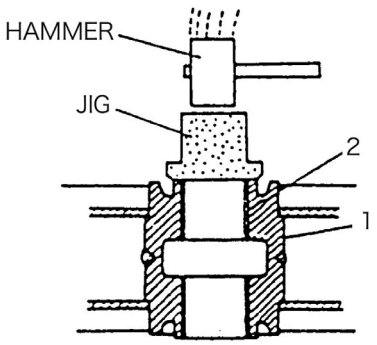

https://truckmanualshub.com/

2	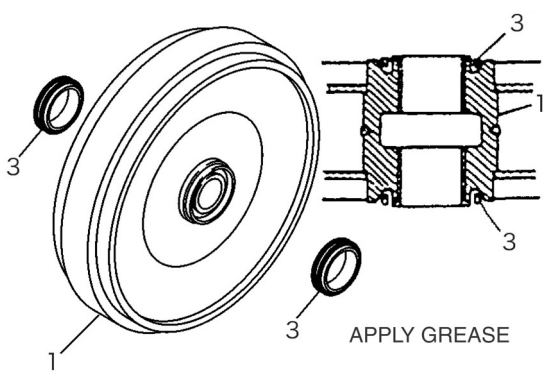	1. Install the floating seals (3) to take-up roller (1). 2. Apply grease to the floating seals. ※ Do not reuse floating seals (3).
3	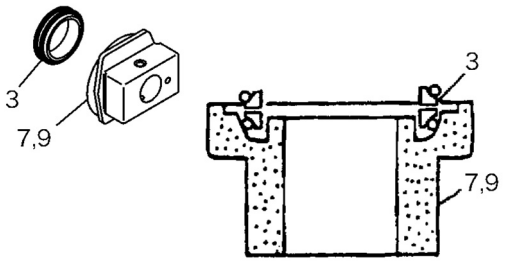	Install the floating seals (3) to the hubs (7),(9). ※ Do not reuse floating seals (3).
4	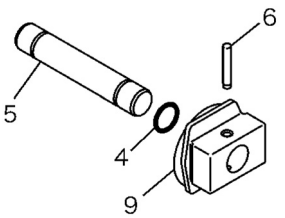	1. Install the greased O-ring (4) to the shaft (5). The installation is to be performed on one side only. 2. Install the shaft (5) to the hub (9) and secure them with a hub pin (6). ※ Do not reuse hub pin (6) and O-ring (4).
5	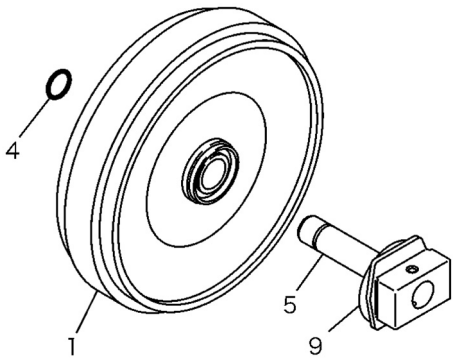	1. Apply grease on the surface of the shaft. 2. Install the shaft (5) to the take-up roller (1).

https://truckmanualshub.com/

6	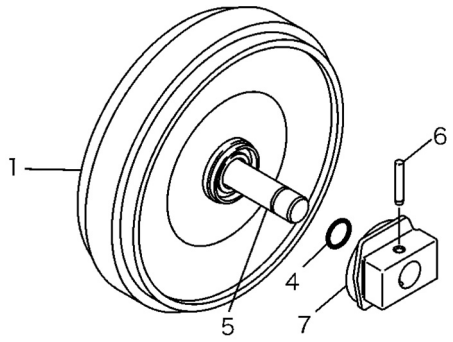	1. Install the greased O-ring (4) to the shaft (5). 2. Install the hub (7) to the shaft (5) and secure them with a hub pin (6). ※ Do not reuse hub pin (6) and O-ring (4).
7	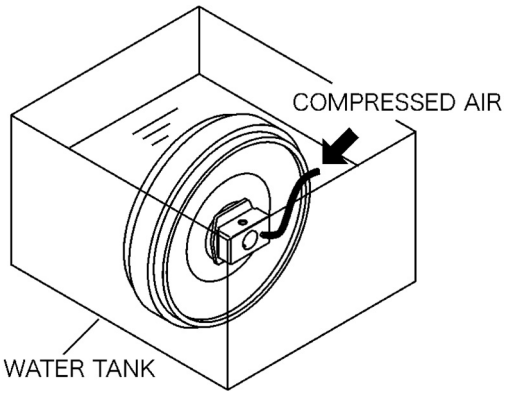	Check for leakage in the assembly using compressed air. Compressed air pressure: 0.2 MPa
8	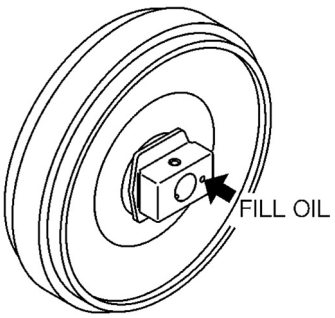	Fill oil through the plug.
9	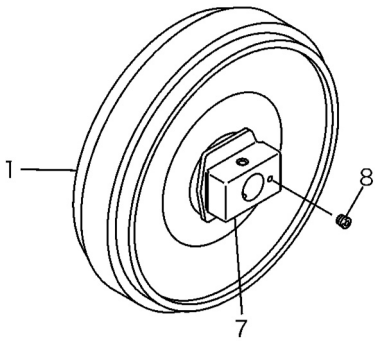	Install the plug (8). Clean the assembly and dry it using compressed air. Now the assembly has been completed.

https://truckmanualshub.com/

Take-up Roller

Assembly Drawings

PART NAME	SYM	QTY
TAKE-UP ROLLER	1	1
BUSHING	2	2
FLOATING SEAL	3	2
O-RING 1A-G80	4	2
ROLLER SHAFT	5	1
HUB PIN	6	2
HUB(WITH PLUG)	7	1
PLUG 1/4	8	1
HUB(WITHOUT PLUG)	9	1

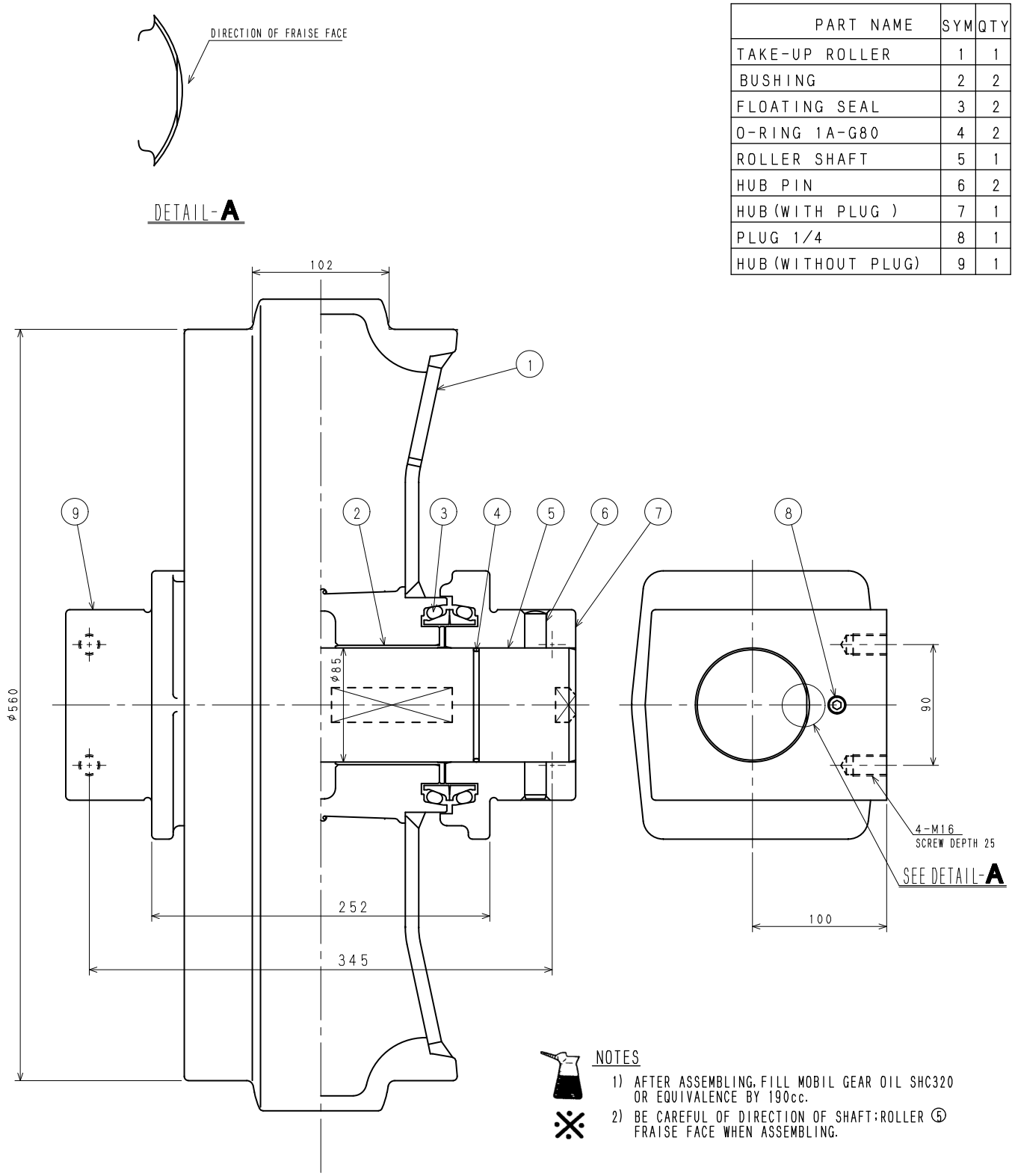

KSA1307Z-C01

https://truckmanualshub.com/

Upper Roller

Disassembling and Assembling Instructions

1. Component Diagram

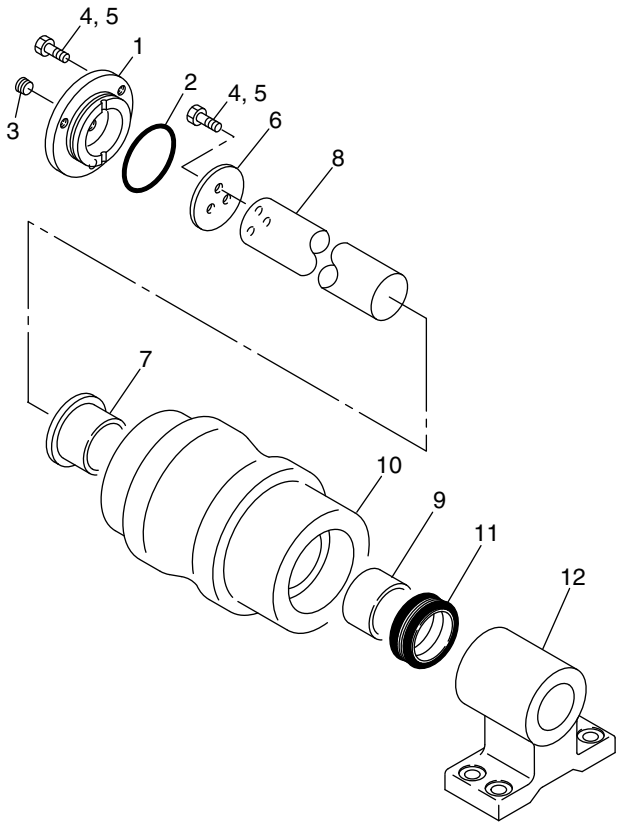

SYMBOL	PART NAME
1	COVER
2	O-RING
3	PLUG
4	HIGH STRENGTH BOLT
5	LOCTITE 262
6	THRUST PLATE
7	BUSHING
8	SHAFT
9	BUSHING
10	ROLLER
11	FLOATING SEAL
12	BRACKET

2. Tools and Jigs

(1) Tools

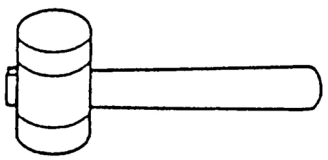

HAMMER

SPANNER

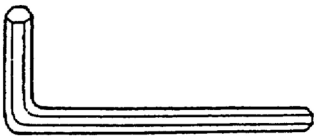

HEXAGON BAR WRENCH

(2) Jigs

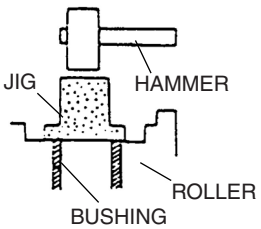

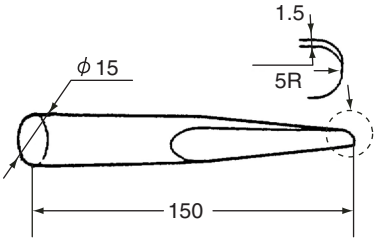

PULLING JIG

https://truckmanualshub.com/

3. Disassembling Instructions

(1) Preparation

Prior to disassembly, take full preparatory measures.

[1] Workbench with vises
Prepare a suitable workbench large enough to arrange and keep parts and perform the work.

[2] Tools and Jigs
For the tools and jigs, refer to the previous section.

(2) General cautions

[1] Handle precision parts carefully during the operation; do not drop or hit them on other parts during the operation.

[2] Do not attempt to finish the operation quickly; do not forcedly pry or hit the parts. Perform the operation carefully and patiently in order to prevent parts deformation, oil leakage and lower efficiency.

[3] As disassembled parts tend to get rusted or collect dust and dirt, dust proof and rust prevention treatment should be applied immediately after disassembling the parts.

(3) Disassembling procedure

1	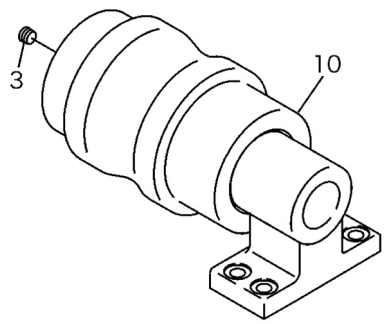	1. Clean the upper roller with kerosene. 2. Remove the plug (3) from the cover to drain the oil.
2	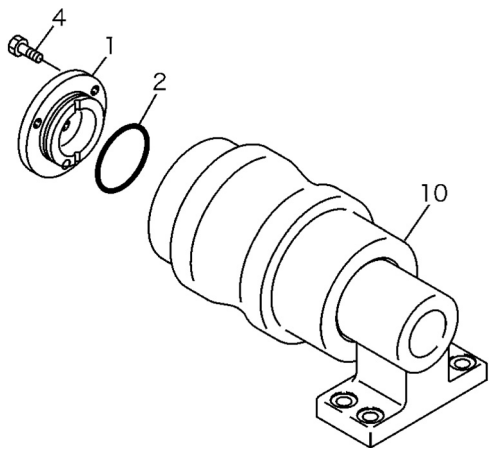	1. Remove the High strength bolts (4) and cover (1) from the upper roller (10). 2. Remove O-ring (2) from the cover (1).

https://truckmanualshub.com/

Upper Roller

3	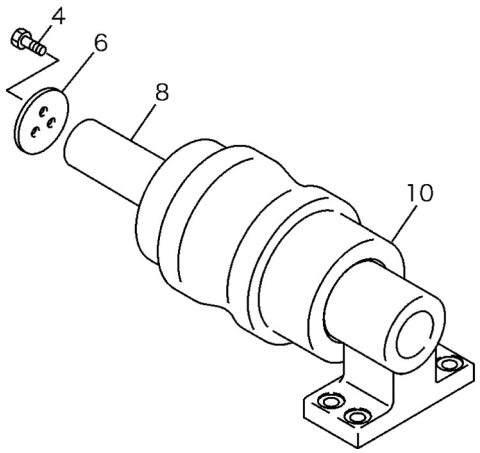	Secure the shaft on the bench with vises, remove the High strength bolts (4) and thrust plate (6) from the shaft (8).
4	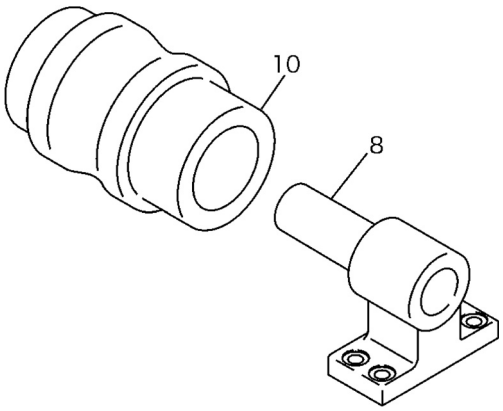	Pull out the roller (10) from the shaft (8).
5	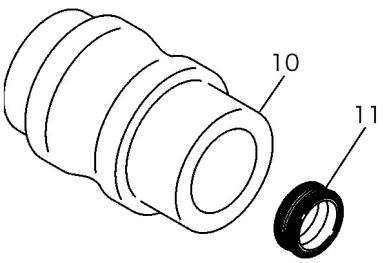	Remove the floating seal (11).
6	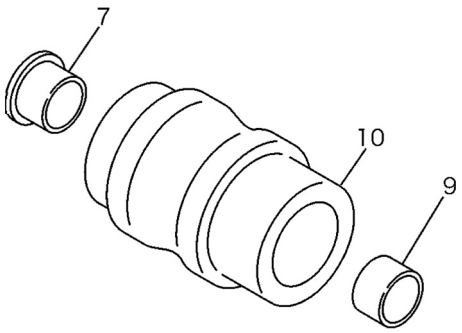	Remove the bushings (7),(9) from the roller (10) using press and pulling jig. Do not attempt to disassemble bushings (7),(9) unless they are unusable due to wear.

https://truckmanualshub.com/

7	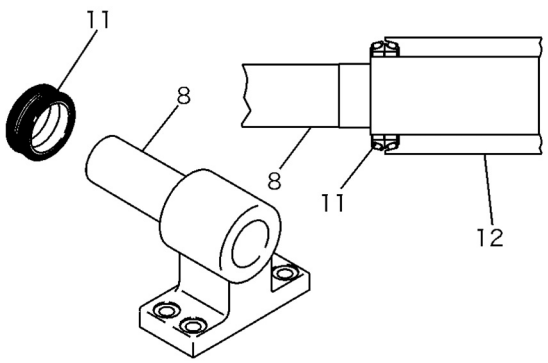	Remove the floating seal (11) from the bracket (12) using pulling jig.
8	Cleaning Parts 1. Preparatory cleaning 1) Place parts in the preparatory cleaning container containing cleaning oil. ※ Wash off deposited substances which may cause scratches. Leave the parts submerged in the cleaning oil until the dirt and grease come off and float up. 2. Finish cleaning 1) Put the parts in the finish cleaning container containing cleaning oil and wash them by slowly moving them. 2) Wipe off the remaining cleaning oil with clean cloth. ※ Place the parts somewhere free of dust and moisture, and dry them using compressed air. After drying, apply engine oil to the parts.	

https://truckmanualshub.com/

4. Assembling instructions

(1) Prior to assembly:

- Clean all the parts.
- Polish scratches, flashes or burrs by using an oil stone.
- Replace sealing parts such as O-rings with new ones.

(2) Assembling procedure

1	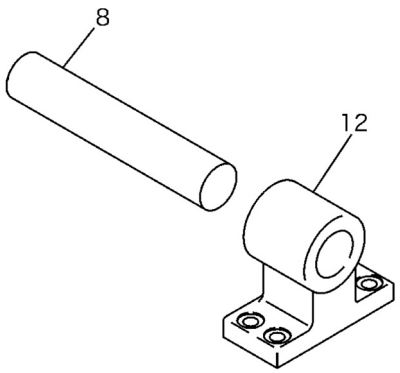	Press fit the shaft (8) into the bracket (12). Press fitting should be securely conducted through the side of the plug hole. ※ In an ordinary case, do not disassembly the bracket from the shaft. Reassembly will be a very difficult task.
2	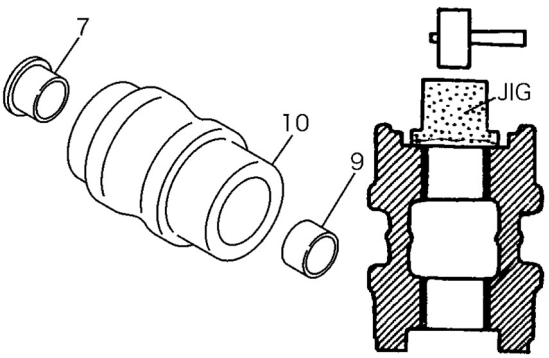	Install the bushings (7),(9) to the roller (10) using a jig and hammer. ※ Do not reuse bushings (7),(9).
3	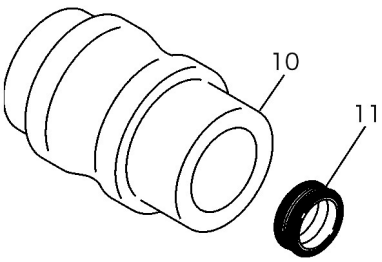	1. Install the floating seal (11) to the roller (10). 2. Apply oil to the surface (lip section) of the floating seal. ※ Do not reuse floating seal (11).

https://truckmanualshub.com/

Upper Roller

4	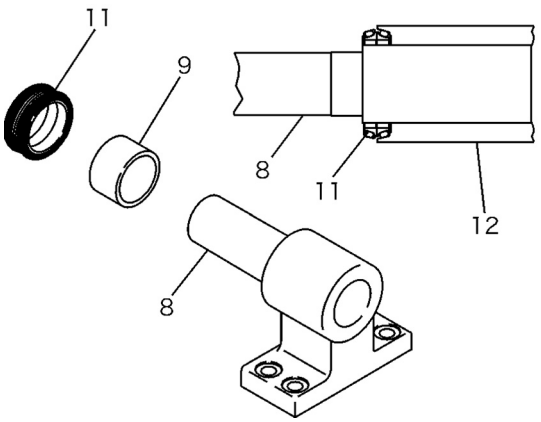	Install floating seal (11) to the bracket (12) and apply oil to the seal surfaces (lip section). ※ Do not reuse floating seal (11).
5	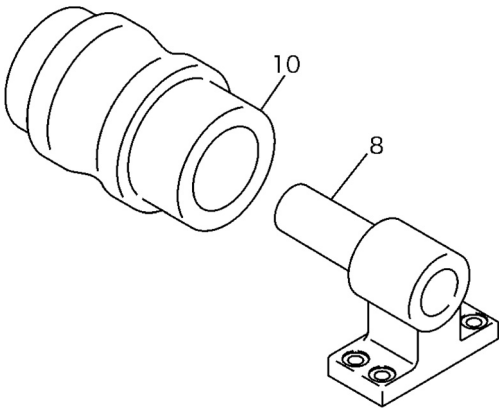	1. Apply grease on the surface of the shaft (8). 2. Install the roller (10) to the shaft (8).
6	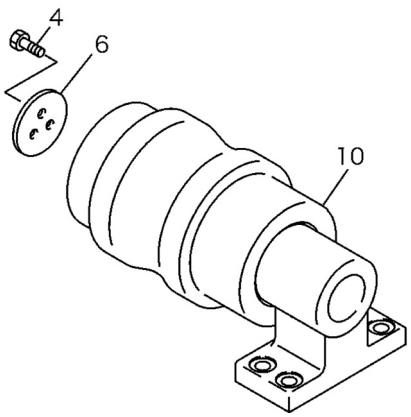	Install the thrust plate (6) to the shaft (8) with High strength bolts (4). Apply grease to inner side of the thrust plate (6). Apply Loctite No.262 to High strength bolts (4).

https://truckmanualshub.com/

Upper Roller

7	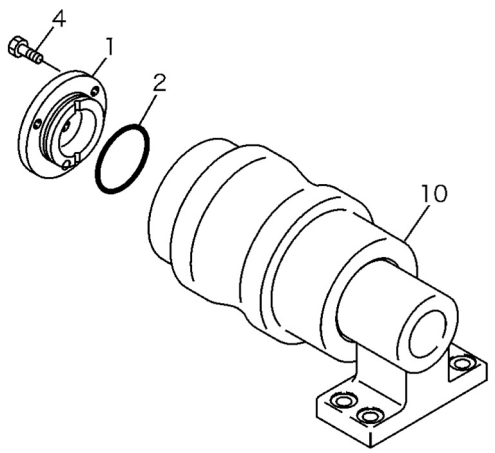	1. Install the grease applied O-ring (2) to the cover (1). 2. Place the cover (1), which has been installed with O-ring to the roller (10) and fasten them with High strength bolts (4). ※ Do not reuse O-ring. Apply Loctite No.262 to High strength bolts (4).
8	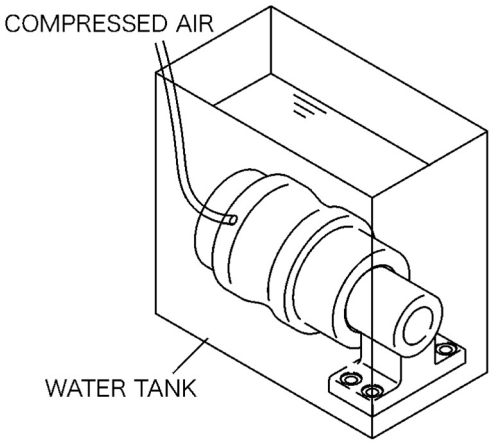	Check for leakage in the assembly using compressed air. Compressed air: 0.2 MPa
9	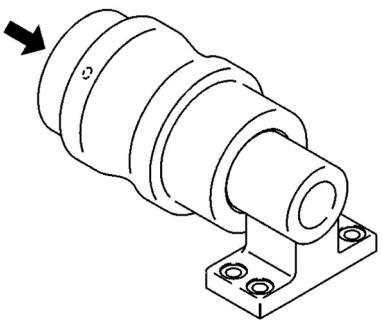	Fill oil through the plug hole.
10	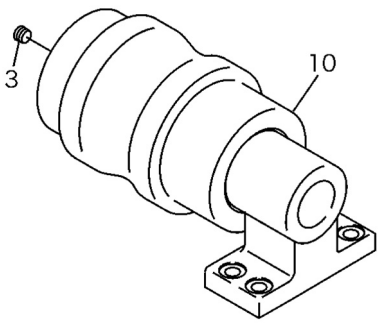	Install the plug (3). Clean the assembly and dry it using compressed air. Now the assembly has been completed.

https://truckmanualshub.com/

Upper Roller

Assembly Drawings

PART NAME	SYM	QTY
COVER	1	1
O-RING 1A-G90	2	1
PLUG 1/4	3	1
HIGH STRENGTH BOLT M10X30	4	6
LOCTITE 262	5	NEED
THRUST PLATE	6	1
BUSHING	7	1
ROLLER SHAFT	8	1
BUSHING	9	1
CARRIER ROLLER	10	1
FLOATING SEAL	11	1
BRACKET	12	1

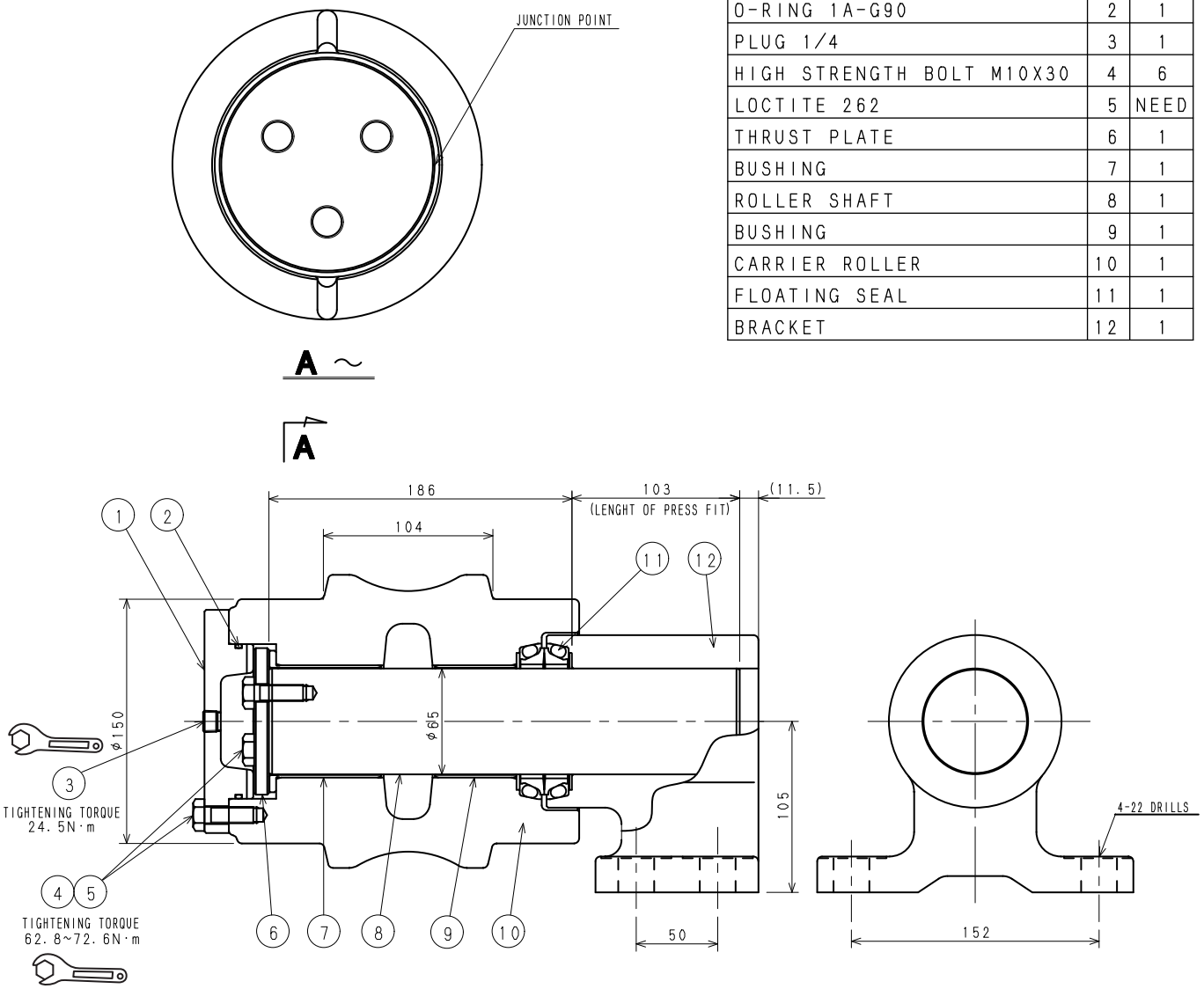

NOTES

1) AFTER ASSEMBLING, FILL 160cc OF MOBILE OIL SHC320 OR EQUIV.

2) ASSEMBLING THE SHAFT ⑧ WITH AND THE BLACKET ⑫ REQUIRES A PRESS-FIT. THE DIMENSIONAL RELATIONSHIP WITH THE SHAFT & THE COLLAR IS 186±0.2 AS SHOWN IN THE DRAWING.

3) ASSEMBLE THE BUSHINGS WITH THE ROLLER BY A PRESS FIT.
NOTE: THE SLIT OF BUSHING & THE GROOVE OF THE ROLLER SHOULD BE OUT OF PHASE WITH EACH OTHER.

KBA1141Z-C02

https://truckmanualshub.com/

Lower Roller

Disassembling and Assembling Instructions

1. Component Diagram

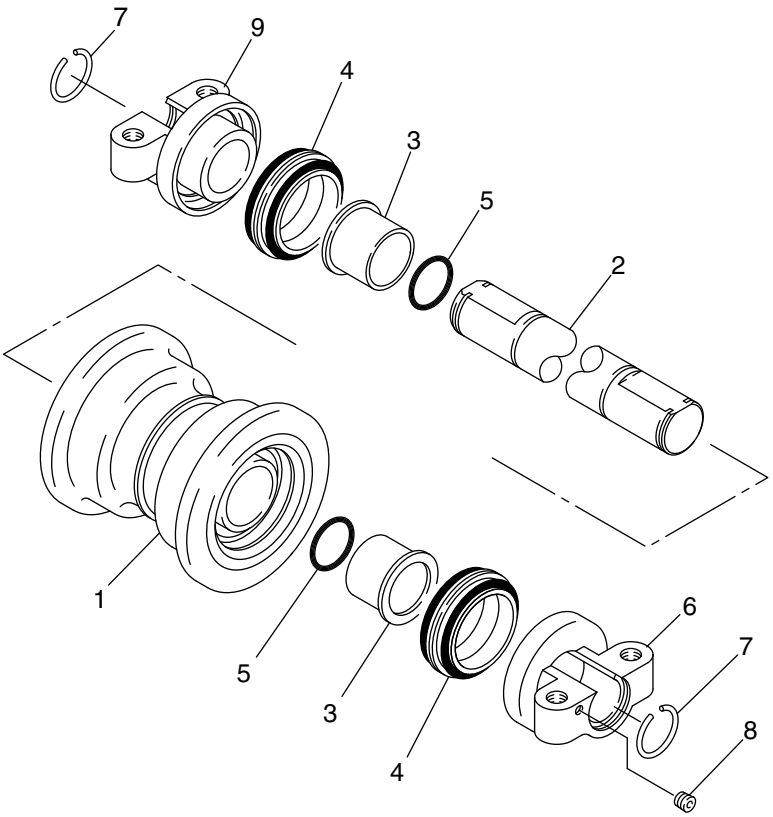

SYMBOL	PART NAME
1	ROLLER
2	SHAFT
3	BUSHING
4	FLOATING SEAL
5	O-RING
6	COLLAR (WITH PLUG)
7	WIRE CLIP
8	PLUG
9	COLLAR (WITHOUT PLUG)

2. Tools and Jigs

(1) Tools

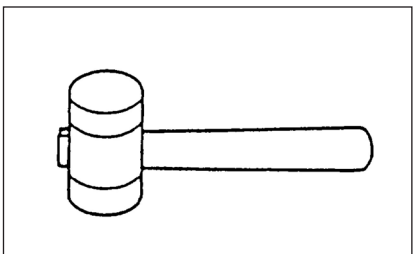

HAMMER

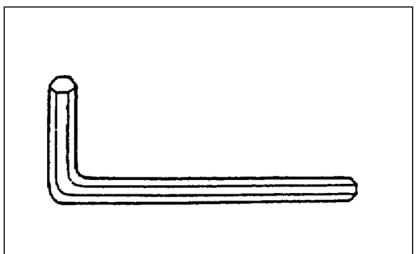

HEXAGON BAR WRENCH

(2) Jigs

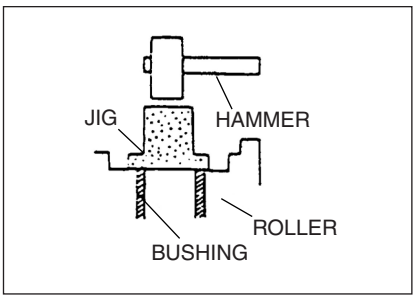

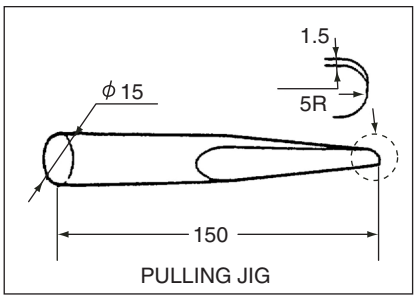

PULLING JIG

https://truckmanualshub.com/

3. Disassembling Instructions

(1) Preparation

Prior to disassembly, take full preparatory measures.

[1] Workbench with vises
Prepare a suitable workbench large enough to arrange and keep parts and perform the work.

[2] Tools and Jigs
For the tools and jigs, refer to the previous section.

(2) General cautions

[1] Handle precision parts carefully during the operation; do not drop or hit them on other parts during the operation.

[2] Do not attempt to finish the operation quickly; do not forcedly pry or hit the parts.
Perform the operation carefully and patiently in order to prevent parts deformation, oil leakage and lower efficiency.

[3] As disassembled parts tend to get rusted or collect dust and dirt, dust proof and rust prevention treatment should be applied immediately after disassembling the parts.

(3) Disassembling procedure

1	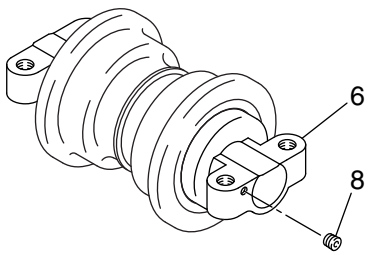	1. Clean the lower roller with kerosene. 2. Remove the plug (8) from the collar (6) to drain the oil.
2	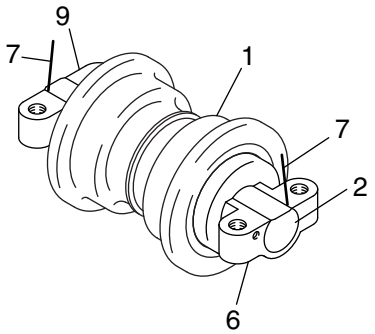	1. Remove the wire clips (7) from the shaft (2). 2. Remove the collars (6),(9) from the shaft (2).
3	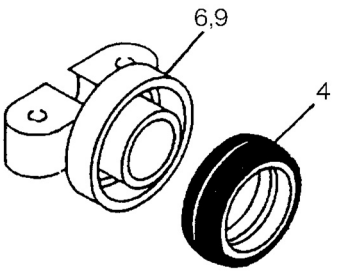	Remove the floating seals (4) from the collars (6),(9) using pulling jig.

https://truckmanualshub.com/

4	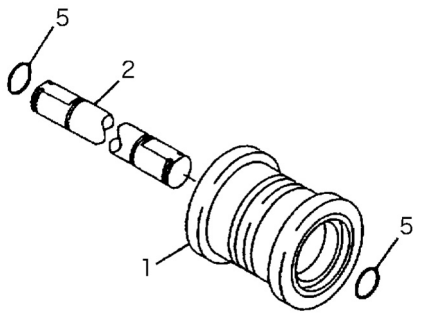	1. Remove the O-rings (5) from the shaft (2). 2. Draw out the shaft (2) from the roller (1).
5	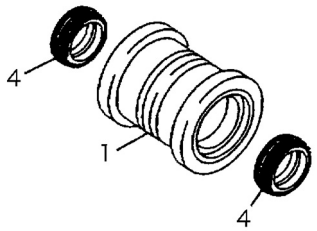	Remove the floating seals (4) from the roller (1).
6	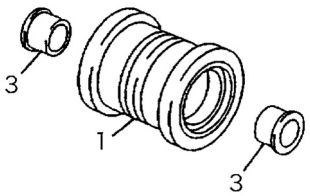	Remove the bushings (3) from the roller (1) using pulling jig and press.
7	Cleaning Parts 1. Preparatory cleaning 1) Place parts in the preparatory cleaning container containing kerosene. ※ Wash off deposited substances which may cause scratches. Leave the parts submerged in the kerosene until the dirt and grease come off and float up.	2. Finish cleaning 1) Put the parts in the finish cleaning container containing kerosene and clean them by slowly moving them. 2) Wipe off kerosene with clean cloth. ※ Place the parts somewhere free of dust and moisture and dry them using compressed air. After drying, apply engine oil to the parts.

https://truckmanualshub.com/

4. Assembling instructions

(1) Prior to assembly:

- Clean all the parts.
- Polish scratches, flashes or burrs by using an oil stone.
- Change sealing parts such as O-rings with new ones.

(2) Assembling procedure

1	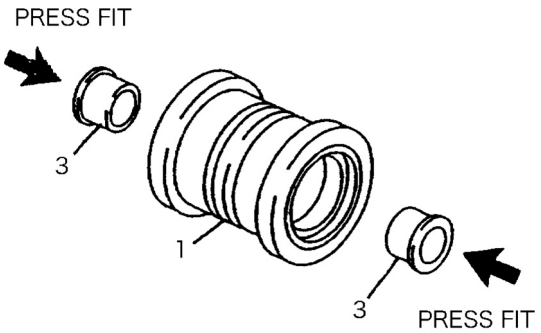	Install the bushings (3) to the roller (1) using jig and hammer. ※ Pay full attention when inserting the bushings by hammering. Do not reuse bushings (3). 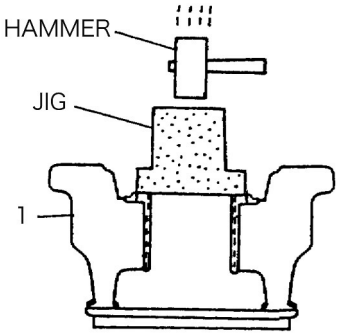
2	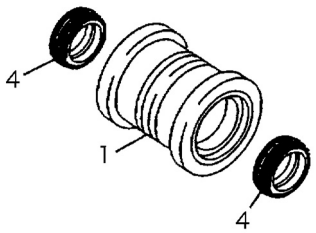	Install the floating seals (4) to the roller (1). ※ Do not reuse floating seals (4).
3	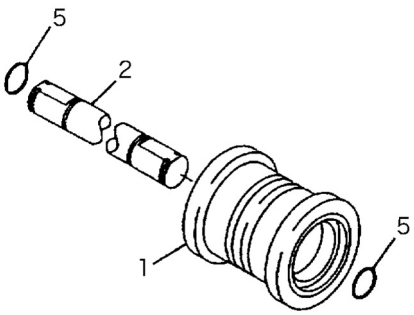	1. Apply grease to the surface of the shaft (2). 2. Install the shaft (2) to the roller (1). 1. Install the greased O-rings (5) to the shaft (2). ※ Do not reuse O-rings (5).

https://truckmanualshub.com/

4	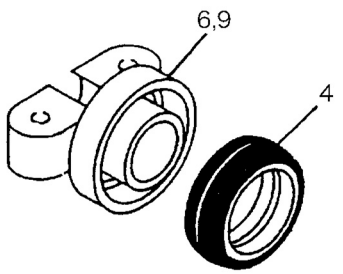	Install the floating seals (4) to the collars (6),(9). ※ Do not reuse floating seals (4).
5	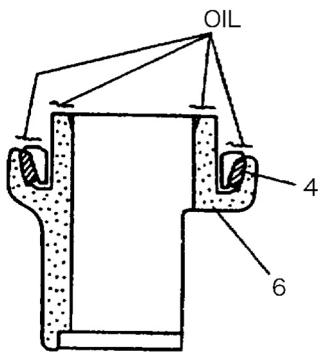	Apply oil to the surface (lip section) of the floating seal.
6	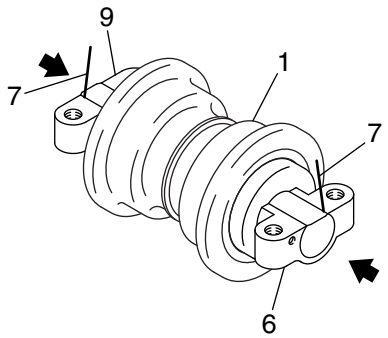	Press fit the collars (6),(9) to the shaft (2) and install the wire clips (7). (Temporary fastening) ※ Do not reuse wire clips (7).
7	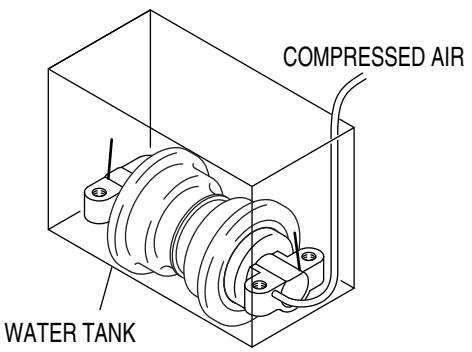	Check for leakage in the assembly using compressed air. Compressed air pressure: 0.2 MPa

https://truckmanualshub.com/

8	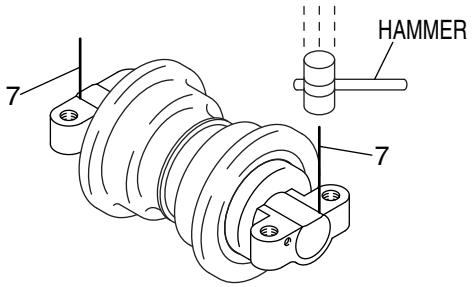	Install the wire clips (7) using a hammer. ※ Do not reuse wire clip (7).
9	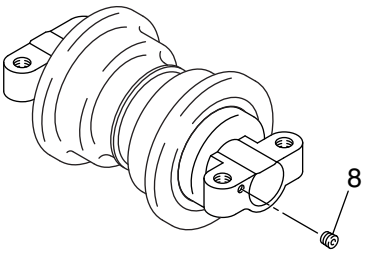	1. Fill oil through the plug hole. 2. Install the plug (8). Clean the assembly and dry them using compressed air. Now the assembly has been completed.

https://truckmanualshub.com/

Lower Roller

Second Edition : 03/2005

Assembly Drawings

PART NAME	SYM	QTY
TRACK ROLLER	1	1
ROLLER SHAFT	2	1
BUSHING	3	2
FLOATING SEAL	4	2
O-RING 1A-G70	5	2
COLLAR (WITH PLUG)	6	1
WIRE CLIP	7	2
PLUG 1/4	8	1
COLLAR (WITHOUT PLUG)	9	1

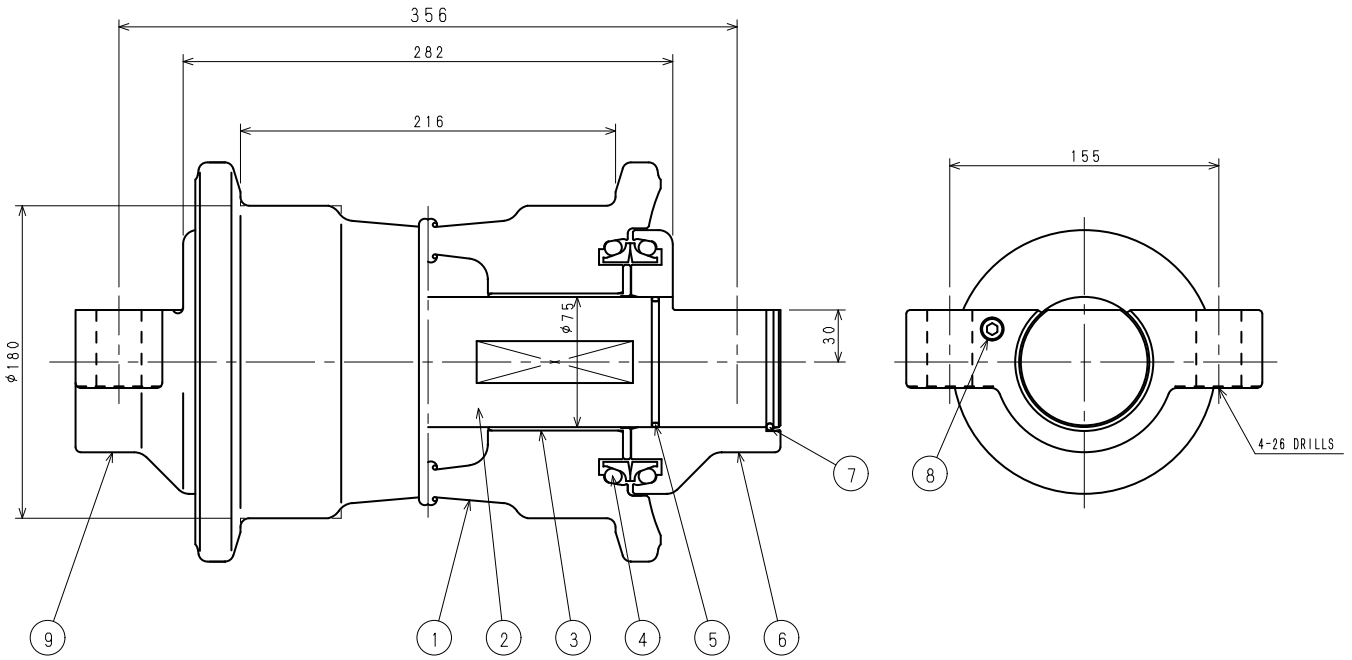

NOTES

AFTER ASSEMBLING, FILL MOBIL GEAR OIL SHC320 OR EQUIVALENT BY 280cc.

KSA1068Z-C02

https://truckmanualshub.com/

Safety

Second Edition : 01/2002

Sections marked with this symbol address extremely important safety issues.
Make sure to read and fully understand the sections before starting operations.

[1] Before starting maintenance work, read carefully and fully understand materials (instruction manual and maintenance manual).

[2] Before disassembling and assembling, take sufficient safety measures to prevent accidents such as falling loads, being caught in or under the machine and burns.
When working under the machine, use safety blocks to support the machine to avoid workers getting caught.

[3] Cranes and other hoist equipment must be operated by licensed operators.
1) Crane operators and slinging workers must be licensed.
2) Make sure to inspect rigging.

[4] Wear proper clothing and protective gear as necessary during inspection or maintenance (safety shoes, helmets, protective goggles, gloves, earplugs, dust mask and other protective devices).

[5] Always keep the work area clean to avoid accidents such as skidding during travel and falling objects.

[6] Make sure to ventilate properly when inspecting or servicing a machine indoors.

[7] Be prepared for any emergencies and take necessary fire preventative measures.

https://truckmanualshub.com/

Grease Cylinder

Disassembling and Assembling Instructions

1. Component Diagram

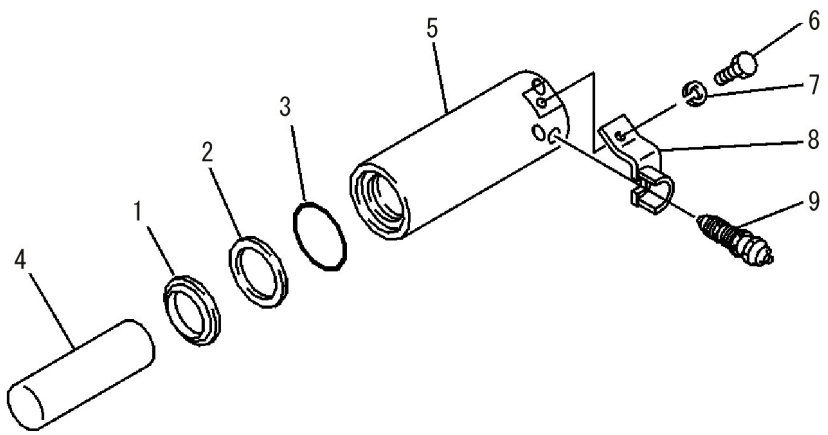

SYMBOL	PART NAME
1	DUST SEAL
2	BACKUP RING
3	O-RING
4	PISTON ROD
5	GREASE CYLINDER
6	HIGH STRENGTH BOLT
7	SPRING WASHER
8	BRACKET
9	CHECK VALVE

2. Tools and Jigs

(1) Tools

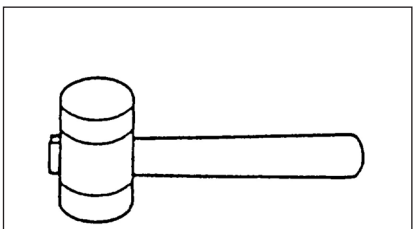

HAMMER

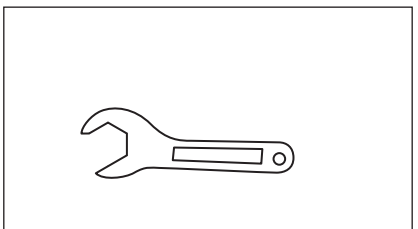

SPANNER

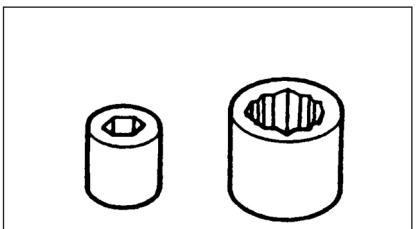

SOCKET

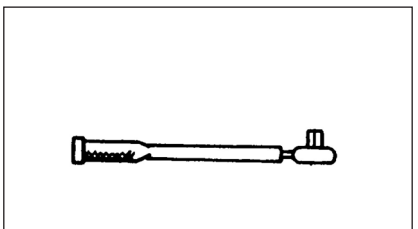

RATCHET HANDLE

(2) Jigs

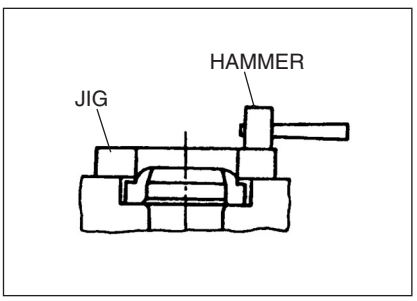

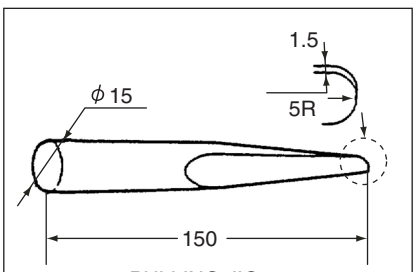

PULLING JIG

https://truckmanualshub.com/

3. Disassembling Instructions

(1) Preparation

Prior to disassembly, take full preparatory measures.

[1] Workbench with vises
Prepare a suitable workbench large enough to arrange and keep parts and perform the work.

[2] Tools and jigs
For the tools and jigs, refer to the previous section.

(2) General cautions

[1] Handle precision parts carefully during the operation; do not drop or hit them on other parts during the operation.

[2] Do not attempt to finish the operation quickly; do not forcedly pry or hit the parts.
Perform the operation carefully and patiently in order to prevent parts deformation, oil leakage and lower efficiency.

[3] As disassembled parts tend to get rusted or collect dust and dirt, dust proof and rust prevention treatment should be applied immediately after disassembling the parts.

(3) Disassembling procedure

1	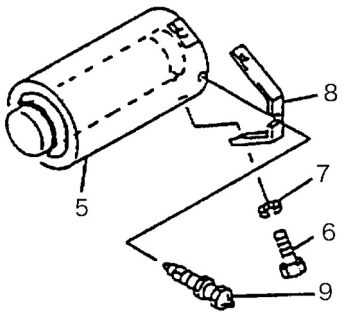	1. Clean grease cylinder with kerosene. 2. Remove bolts (6) and washers (7), and then remove the bracket (8). 3. Remove check valve (9) from grease cylinder (5).
2	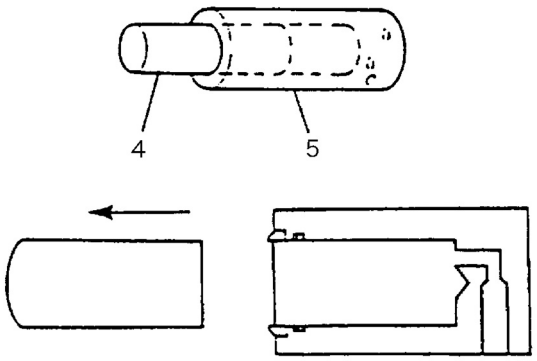	Draw out piston rod (4) from grease cylinder (5).

https://truckmanualshub.com/

3	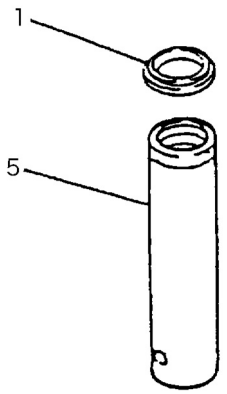	Remove dust seal (1) from grease cylinder (5) using a pulling jig.
4	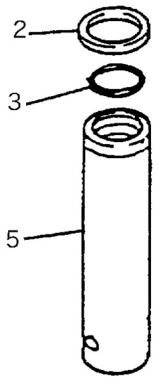	Remove back-up ring (2) and O-ring (3) from grease cylinder (5).

4. Assembling instructions

(1) Prior to assembly:

- Clean all parts.
- Polish scratches, flashes or burrs using an oil stone.
- Change sealing parts such as O-rings with new ones.

(2) Assembling procedure

1	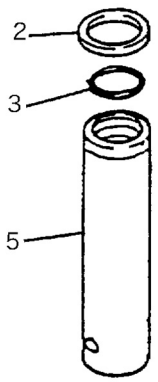	1. Install grease-applied O-ring (3) to grease cylinder (5). 2. Install back-up ring (2). ※ Do not reuse back-up ring (2) and O-ring (3).

https://truckmanualshub.com/

2	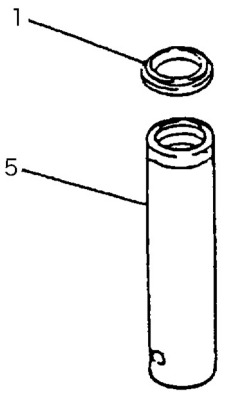	1. Install dust seal (1) to grease cylinder (5) using a jig and hammer. 2. Apply grease on lip section of dust seal. ※ Do not reuse dust seal (1). 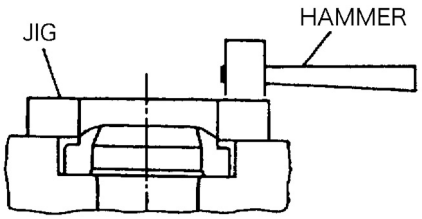
3	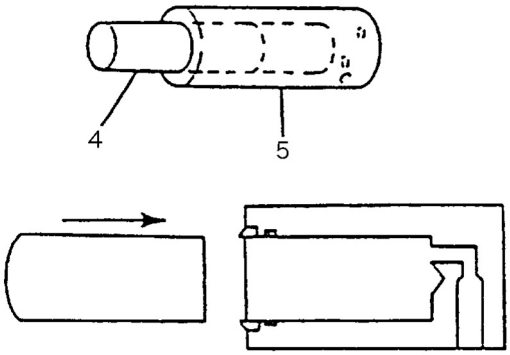	1. Apply grease on surface of piston rod (4). 2. Insert piston rod (4) into grease cylinder (5).
4	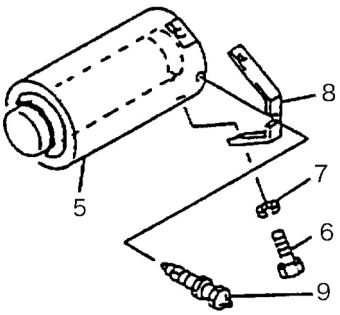	1. Install check valve (9) to grease cylinder (5) by applying specified tightening torque. 2. Install bracket (8), and then fasten it with bolts (6) and washers (7).

https://truckmanualshub.com/

Grease Cylinder

Second Edition : 03/2005

Assembly Drawings

PART NAME	SYM	QTY
DUST SEAL	1	1
BACKUP RING T-P100	2	1
O-RING 1B-P100	3	1
PISTON ROD	4	1
GREASE CYLINDER	5	1
HIGH STRENGTH BOLT M12X25	6	2
SPRING WASHER 12	7	2
BRACKET	8	1
CHECK VALVE	9	1

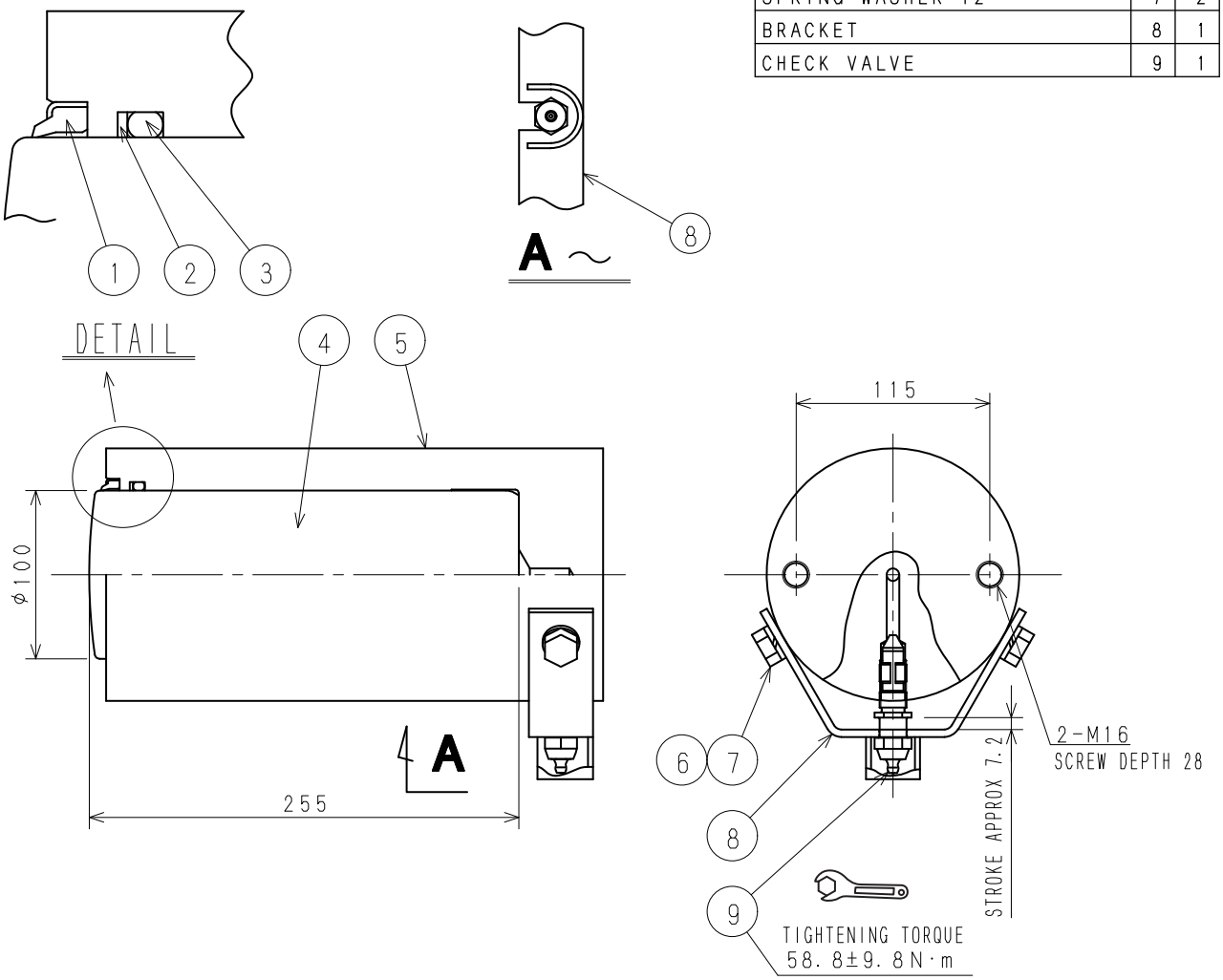

NOTES

1) NOTE: THE POSITION OF BACKUP-RING ② & O-RING ③, APPLY GREASE ON O-RING BEFORE ASSEMBLY.

※ 2) THE SPHERICAL SURFACE OF PISTON ROD ④ IS TOWARD THE OUTSIDE OF THE GREASE CYLINDER.

3) ASSEMBLE THE BRACKET ⑧ AS SHOWN IN THE DRAWING, AFTER ASSEMBLING THE CHECK VALVE.

KSA0832Z-B01

https://truckmanualshub.com/

Rotating Joint

Disassembling and Assembling Instructions

1. Component diagram

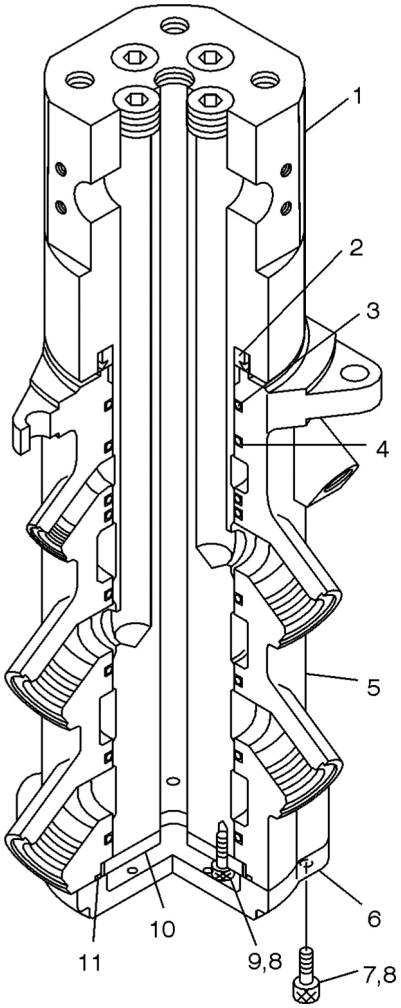

Symbol	Part Name
1	AXLE
2	V-RING
3	O-RING
4	PAKING RING
5	ROTOR
6	COVER
7	HEXAGON SOCKET HEAD BOLT
8	LOCTITE
9	HEXAGON SOCKET HEAD BOLT
10	THRUST PLATE
11	O-RING

https://truckmanualshub.com/

2. Tools and Jigs

(1) Tools

(1) Hexagon bar spanner
(2) Torque wrench
(3) Box spanner
(4) Flash light
(5) Inspection mirror
(6) Brush (vinyl made)

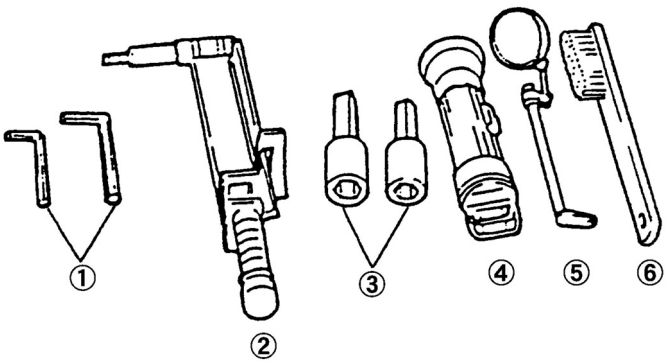

(2) Jigs

Jig for pushing out axle

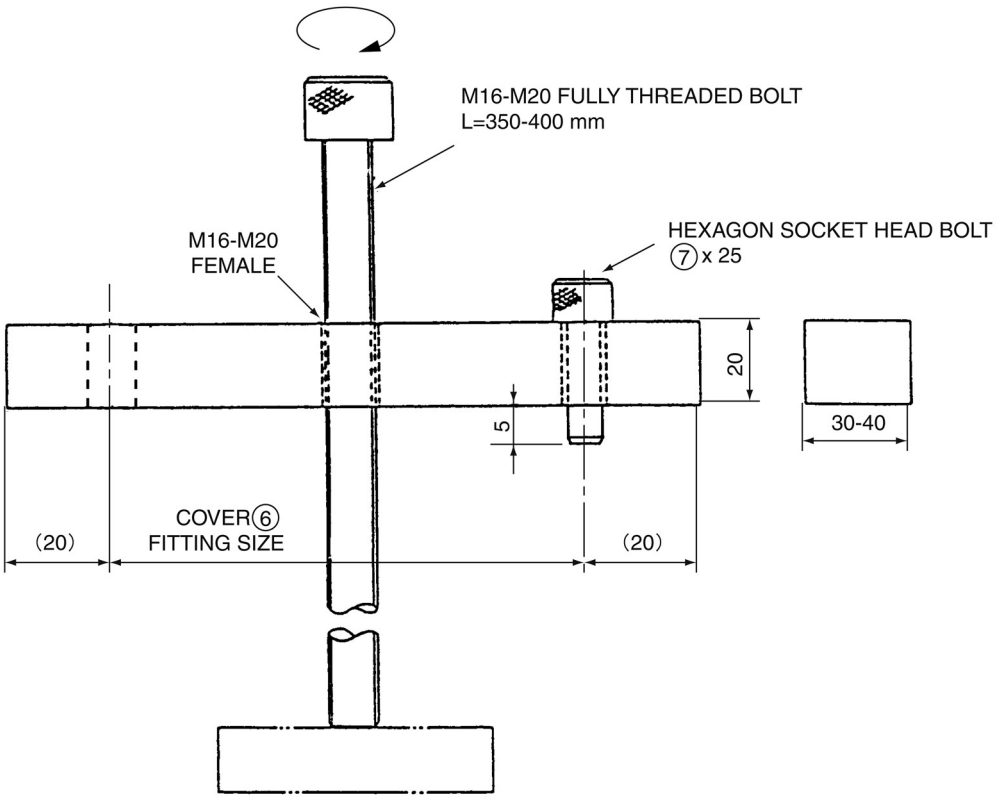

https://truckmanualshub.com/

3. Disassembling instructions

(1) Prior to disassembly

[1] As this is a hydraulic device, follow the cautions below.
- Rough handling should be avoided (e.g. forcedly prying and hitting).
- Be careful when handling parts; do not drop or hit against other parts.
- Do not allow foreign substances such as dirt or moisture to enter into the parts.

[2] Always use jigs when disassembling axles and rotors.

[3] Use a strongly-built, stable workbench which has enough space. The workspace should be clean and free of dirt and moisture. Remove all dirt and moisture before starting work.

[4] Inspect the tools and jigs before starting work. Remove dirt and moisture to make them clean.

[5] Use suitable tools and jigs which meet requirements for the job.
Follow the procedure below to disassemble rotating joints.

(2) Disassembling procedure

1	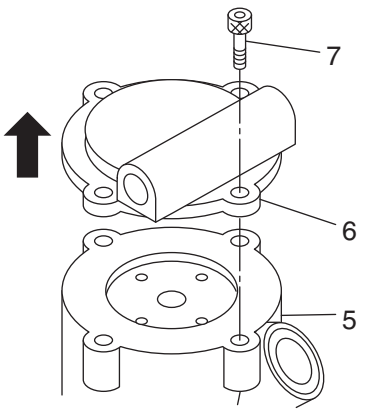	Remove the cover (6) together with the bolt (7).
2	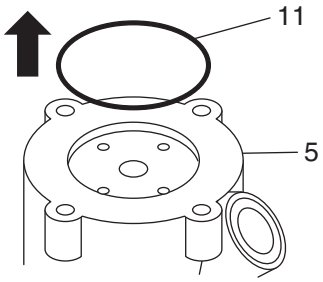	Remove the O-ring (11).
3	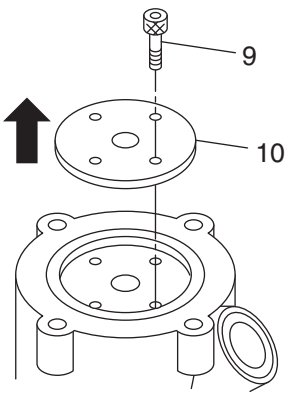	Remove the thrust plate (10) together with the bolt (9).

https://truckmanualshub.com/

4	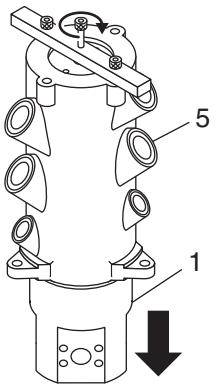	Push out the axle (1) from the rotor (5) using a jig. ※ Do not hit the parts with a hammer while carrying out this operation.
5	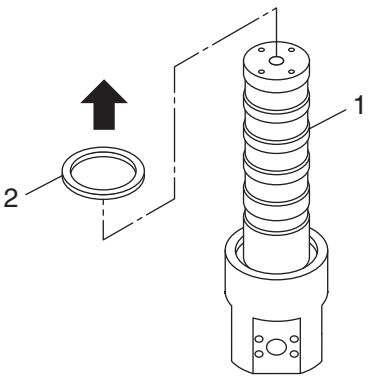	Remove the V-ring (2) from the axle (1).
6	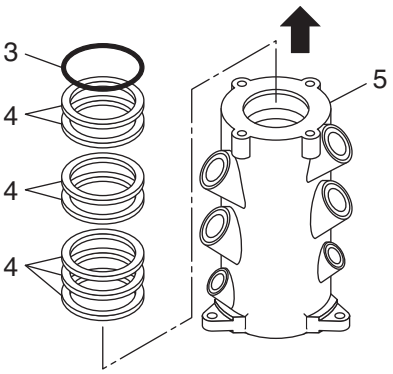	Remove the O-ring (3) and packing rings (4) from the rotor (5).

https://truckmanualshub.com/

4. Assembling instructions

(1) Prior to assembly:

- Clean all the parts.
- Polish scratches, flashes or burrs using an oil stone.
- Change sealing parts such as O-rings and packing ring with new ones.

  Prior to the disassembly described in the Section 3-(1), perform the same cautions and measures mentioned in this section.

(2) Assembling procedure

1	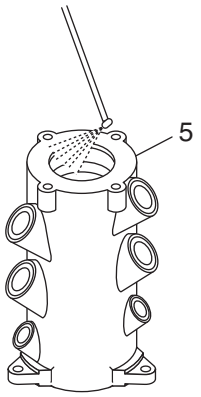	1. Clean the rotor (5) using cleaning liquid or compressed air. 2. After cleaning, check for scratches, flashes, burrs or dents on the inner sides or grooves of the rotor.
2	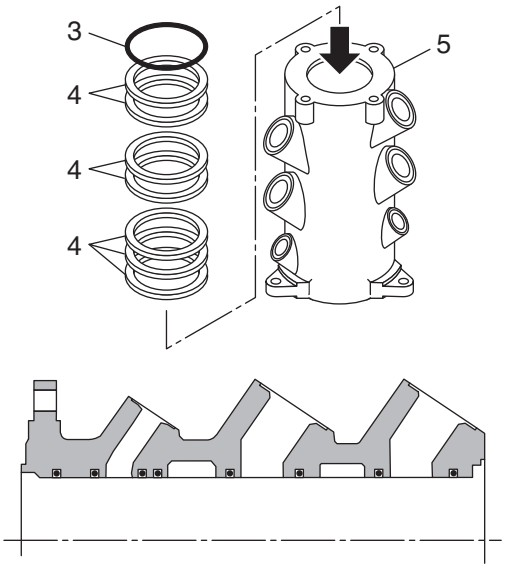	Check the number of packing rings (4) and the O-rings (3). Apply grease and install them following the steps shown below. 1. Set one packing rings (4) in each groove up to the second from the top. 2. Set the O-ring (3) in the top groove. Do not reuse packing rings (4). ※ Do not reuse O-ring (3).

https://truckmanualshub.com/

3	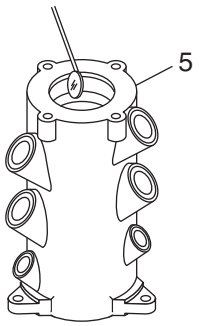	After installing O-ring and packing ring, check for extrusions or twists using a mirror. Also check for installation errors. After the check is complete, apply grease. After the grease application, check again for extrusion.
4	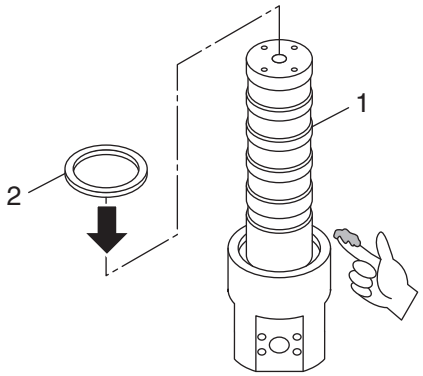	Install the V-ring (2) to the axle (1), and apply plenty of grease. Ensure that no water or dirt mixes into the grease. ※ Do not reuse V-ring (2).
5	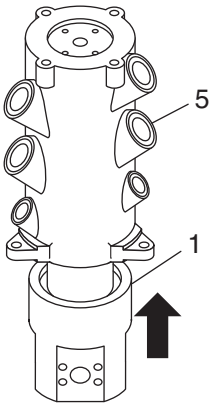	Install the axle (1) to the rotor (5). ※ Be careful not to cause any cuts or damage to the V-ring (2) while setting.
6	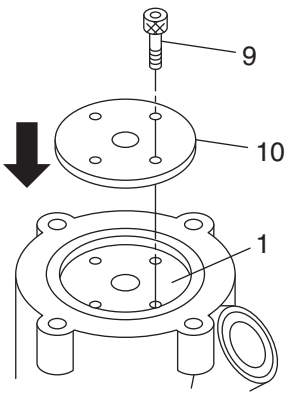	Apply Loctite to hexagon socket head bolt (9) and install the thrust plate (10) to the axle (1) with the bolt by applying the specified tightening torque.

https://truckmanualshub.com/

7	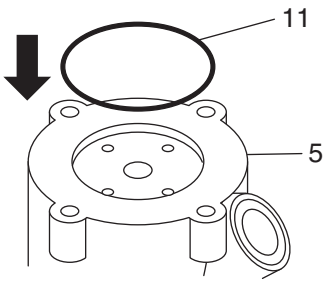	Install the O-ring (11) to the rotor (5). ※ Do not reuse O-ring (11).
8	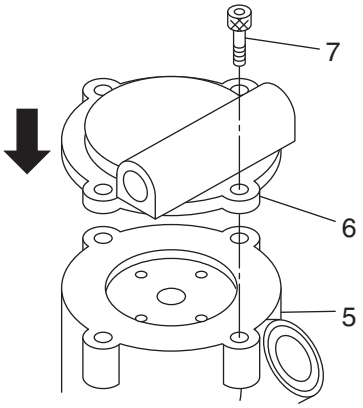	Apply Loctite to the hexagon socket head bolt (7) and install the cover (6) to the rotor (5) with the bolt by applying the specified tightening torque.

https://truckmanualshub.com/

Rotating Joint

First Edition : 04/2006

Assembly Drawings

SYMBOL	PART NAME	QTY
1	AXLE	1
2	V-RING	1
3	O-RING	1
4	PACKING RING	7
5	ROTOR	1
6	COVER	1
7	HEXAGON SOCKET HEAD CAP SCREW	4
8	LOCTITE	AS NEEDED
9	HEXAGON SOCKET HEAD CAP SCREW	4
10	THRUST PLATE	1
11	O-RING	1
12	DRIVE SCREW	2
13	TRADE MARK PLATE	1

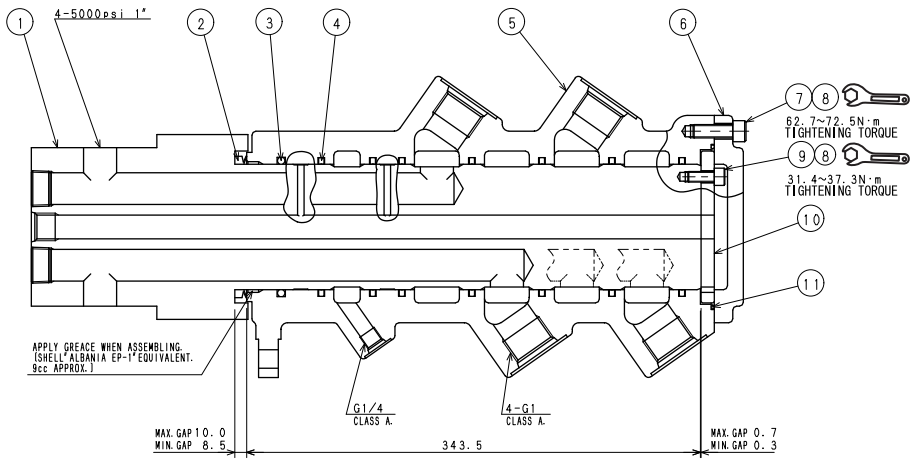

A ~ A
(SCALE:1/2)

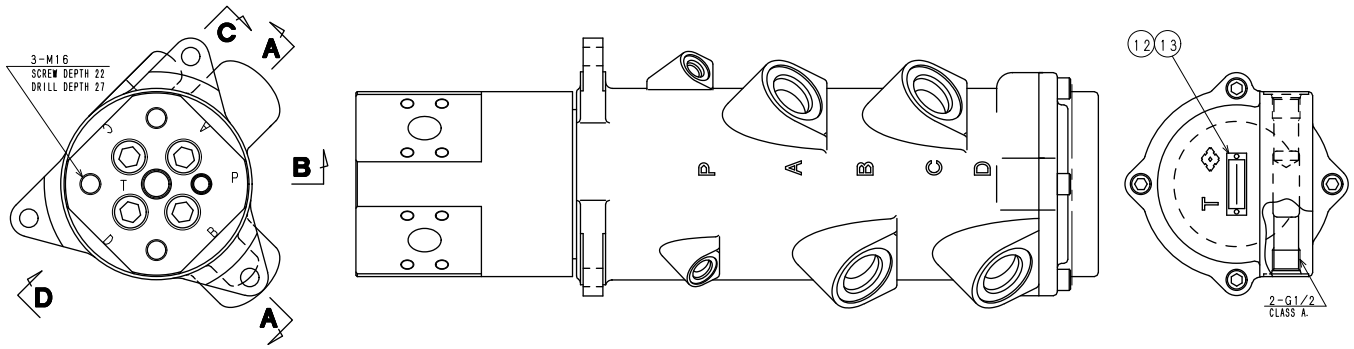

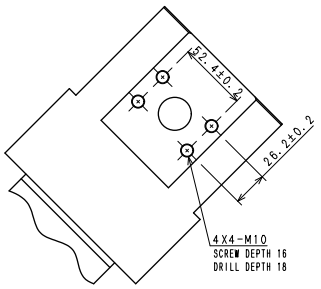

D ~

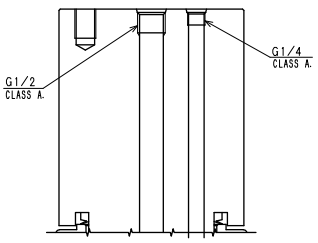

B ~

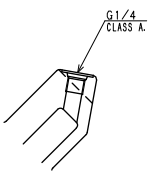

C ~

NOTES

1) NEED TREATMENT FREE FROM DUST & RUST.

KSA1305X-D00

https://truckmanualshub.com/

Disassembling and Assembling Instructions

1. Precautions for Work

[1] When fastening the piping connection for refrigerating circuits, apply special oil (SP-10) to O-rings and fasten the connecting parts using tightening torque shown in Table 1. Further, tighten screws and bolts using torque shown in Table 2.

Table 1

	Pipe fastening section	Tightening torque N・m
1	D hose and compressor (M8 bolt)	20 to 30
2	S hose and compressor (M8 bolt)	20 to 30
3	D hose and condenser (1/2 inch nut)	20 to 25
4	Condenser and L hose (L pipe) (8 mm nut)	12 to 15
5	L hose (L pipe) and receiver dryer (M 6 bolt)	8 to 12
6	S hose, L hose and expansion valve (M6 x P1.25)	8 to 12

Table 2

Category	Type	Nominal diameter (mm)	Pitch (mm)	Tightening torque N・m
Bolt	7T	M6	1.0	8 to 12
		M8	1.25	20 to 30
		M10 (air conditioning unit mounting section)	—	17 to 19
		M10	1.25	40 to 54
		M10	1.5	37 to 51
	9T	M8	1.25	24 to 36
		M10	1.25	56 to 76
		M10	1.5	53 to 72
Nut	Pipe diameter	8 mm	1.5	12 to 15
		1/2 inch	1.5	20 to 25
		5/8 inch	1.5	30 to 35

https://truckmanualshub.com/

※ [2] About oil capacity for compressors
SD7H13WM7359 X1 Series compressors are filled with 135 cc of oil (SP-10). Low oil level may cause it to seize up at high speeds and reduce durability while excessive oil may reduce its cooling performance. While the air conditioning is running, the oil is distributed in the refrigerating circuits. Therefore, the oil level must be adjusted following the instructions in Table 3 when changing parts.

Table 3

Replacement part	Oil level adjustment
Compressor	1. Measure the oil volume in compressor that is removed. 2. Remove all the oil except that remaining in the compressor that was removed from the brand new compressor. Example: If 30 cc of oil remains in the removed compressor (for a SD7H13WM7359 compressor),remove 105 cc from the brand new compressor. (135 cc - 30 cc = 105 cc)
Evaporator	Refill 40 cc.
Condenser	Refill 40 cc.
Receiver dryer	Refill 20 cc.

※ Note: The oil type is different according to compressors. Refer to the nameplate attached to the compressor, which has indications for the oil type.

※ [3] Before starting the operation, stop the engine and turn off the power for air conditioner related devices.

※ [4] Avoid water or dust from entering the refrigerating circuits. In addition, do not leave the piping unattached from the machine.
Avoid conducting piping removal or fitting work under rainy conditions.

※ [5] When the work is completed, check that the faulty parts have been fully repaired by running the air conditioner.

https://truckmanualshub.com/

2. Disassembling and Assembling Air Conditioning Unit

[1] Name for each part of air conditioning unit

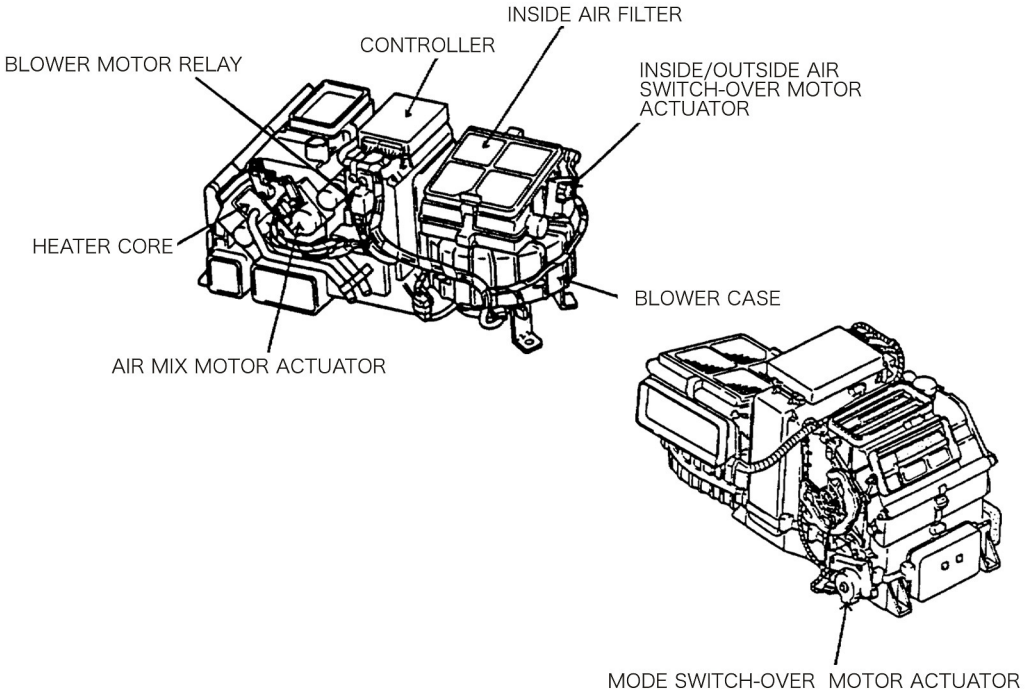

[2] Removing the intake case and blower case:

1) Remove the inside air filter, and remove the 4 screws (+T5 x 14) to remove the intake case.
2) Remove the blower case by removing the 3 screws (+T5 x 14) that mount the blower case to the unit case.

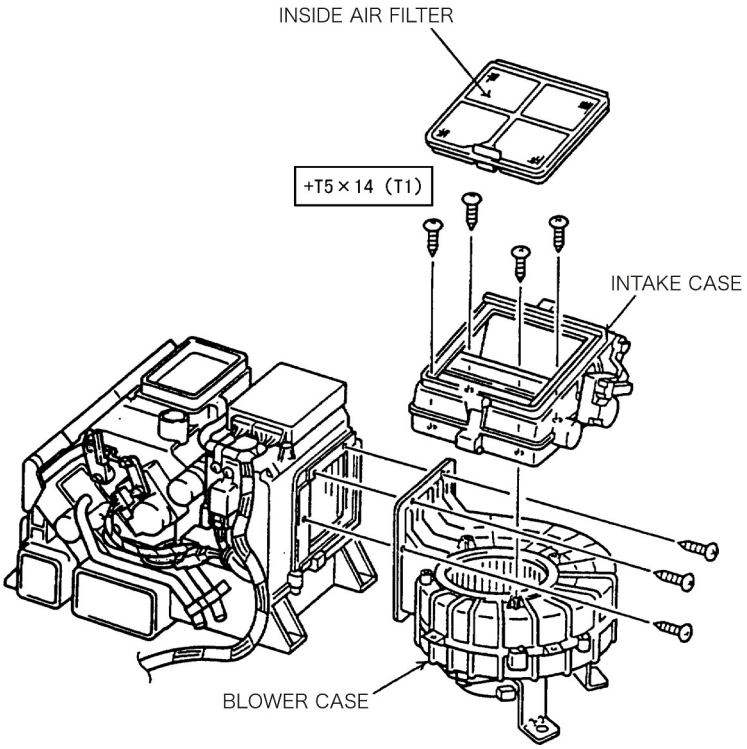

https://truckmanualshub.com/

[3] Removing the blower motor and blower controller:

1) After removing the cooling hose, remove the 3 bolts (+N5 x 16) fitted under the blower case and pull out the blower motor.

   Note: Do not remove the fan from the blower motor.

2) Remove the 2 screws (+T4 x 14) under the blower case and pull out the blower controller.

   Note: Do not disassemble the blower controller.

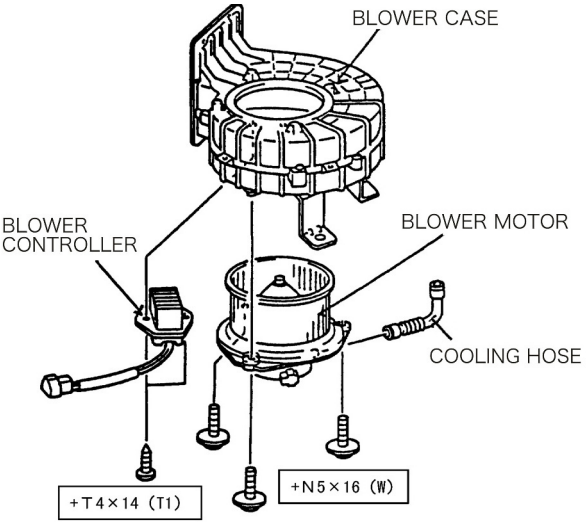

[4] Removing the heater core:

1) Drain the cooling water, detach the heat hose and then remove the 2 screws (5 x 16).

2) Remove the pipe clamp and the AHC bracket, and then pull out the heat core.

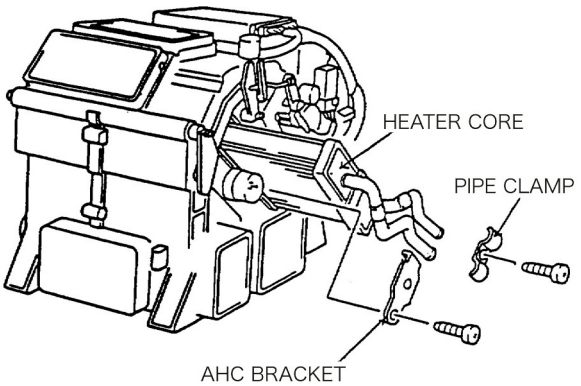

https://truckmanualshub.com/

[5] Removing the upper and lower cases of the air conditioning unit:

1) Remove the rod D from the rod holder mounted on the lever of the mode motor actuator.
2) Remove the motor actuator mounted on the lower unit case and the upper unit case by removing 3 screws.
3) Remove the 11 mounting screws (+N5 x 16) from the lower unit case and the upper unit case.
4) Pull upward the upper unit case, paying attention not to have evaporation sensor cords caught by the case.

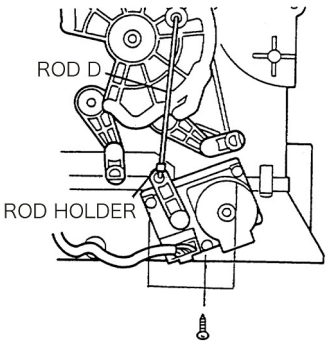

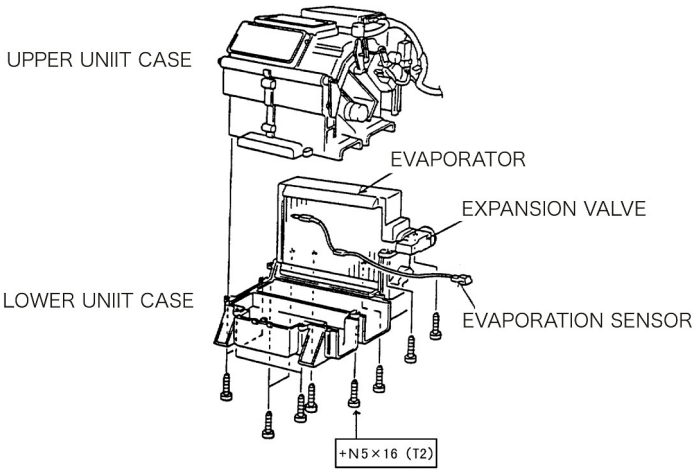

[6] Changing the evaporator and the expansion valve:

1) Pull out the evaporator with its heat insulating material attached from the lower unit case.
2) Pull out the evaporation sensor with its sensor holder attached from the evaporator.
3) Remove the 2 hexagon bolts (M5 x 40) from the evaporator, and then, remove the expansion valve from evaporator.
4) Install O-rings (5/8 and 1/2 NFO rings) onto a new evaporator and then fit the expansion valve.

※ Special care should be taken while installing to avoid O-ring engagement.

※ Do not reuse O-rings.

※ Install O-rings with bare hands.

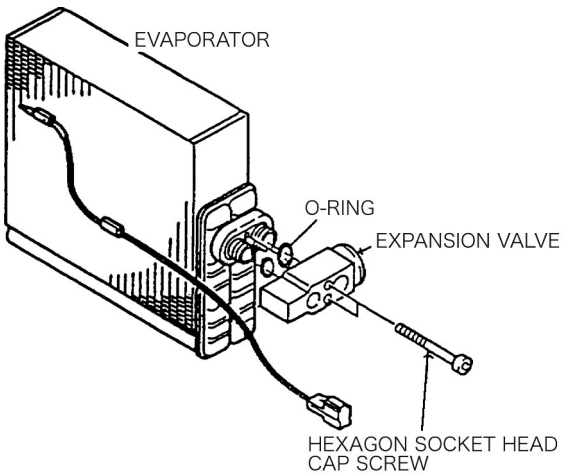

https://truckmanualshub.com/

[7] Installing the evaporation sensor:

※ Attach the evaporation sensor to the holder, place the tip of the holder and sensor in place as shown in the figure below.

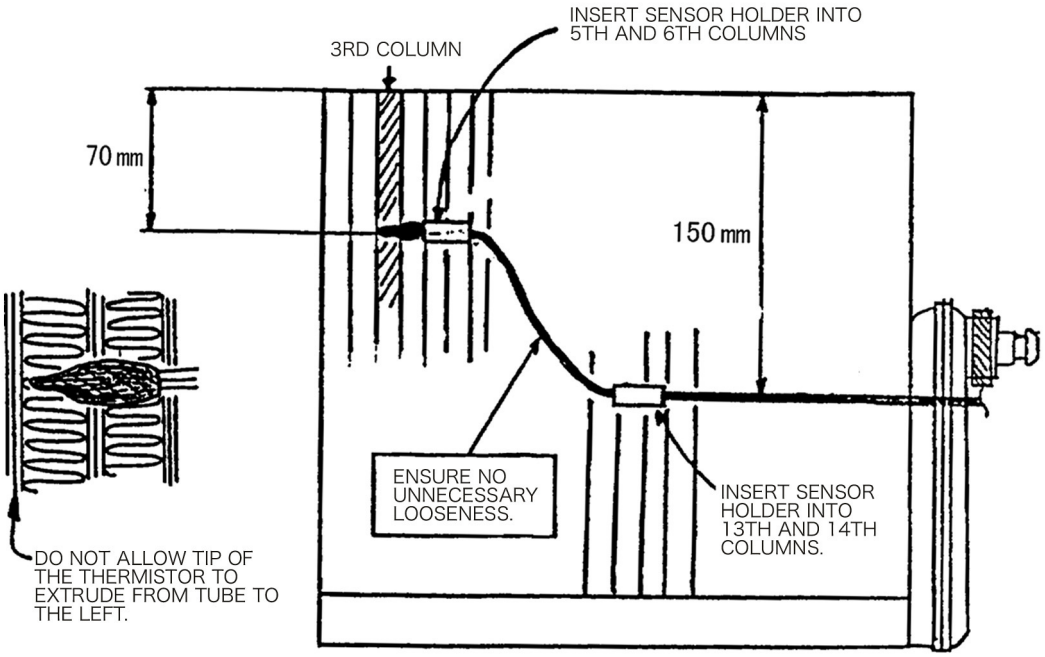

[8] Replacement of the motor actuator:
Replacement of mode motor actuator:

1) Remove the rod clamp C interlocking the mode motor actuator and mode cam by pushing to the direction of ARROW.
2) Remove 3 mounting screws from the motor actuator and remove the motor actuator with its rod clamp and lever attached from the unit.
3) Remove the rod clamp and lever. Then, install them on a new motor actuator in the reverse order of the disassembly.

MODE SWITCH-OVER MOTOR ACTUATOR

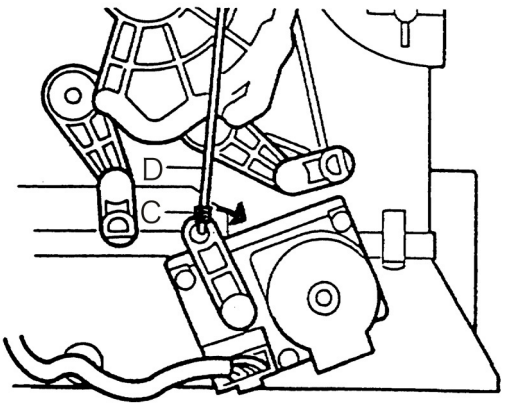

https://truckmanualshub.com/

Replacement of the air mix motor actuator:

1) Remove the rod B from the lever by pushing the rod clamp A, which is attached on the lever of the motor actuator, to the direction of ARROW.
2) Remove the 3 mounting screws from the motor actuator, and remove the motor actuator with its rod clamp and lever attached from the unit.
3) Remove the rod clamp and lever from the motor actuator. Install a new motor actuator in the reverse order of the disassembly.

AIR MIX MOTOR ACTUATOR

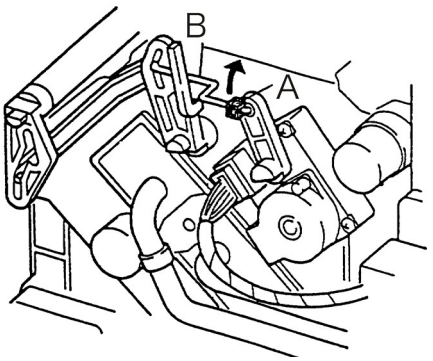

Replacement of the inside/outside air switch-over motor actuator:

1) Remove the screw fixing the motor actuator with its lever E attached, and remove the motor actuator.
2) Remove the lever from the motor actuator. Install a new motor actuator in the reverse order of the disassembly.

INSIDE/OUTSIDE AIR SWITCH-OVER MOTOR ACTUATOR

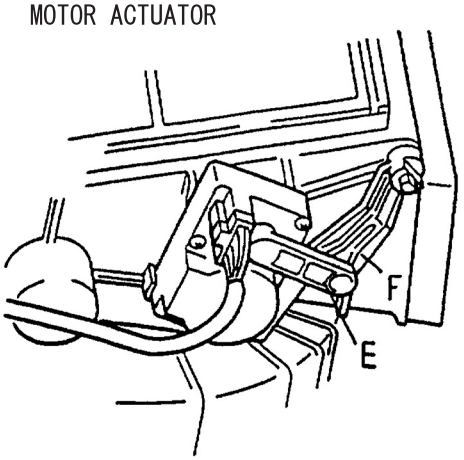

https://truckmanualshub.com/

Check Sheets

1. Drive Sprocket

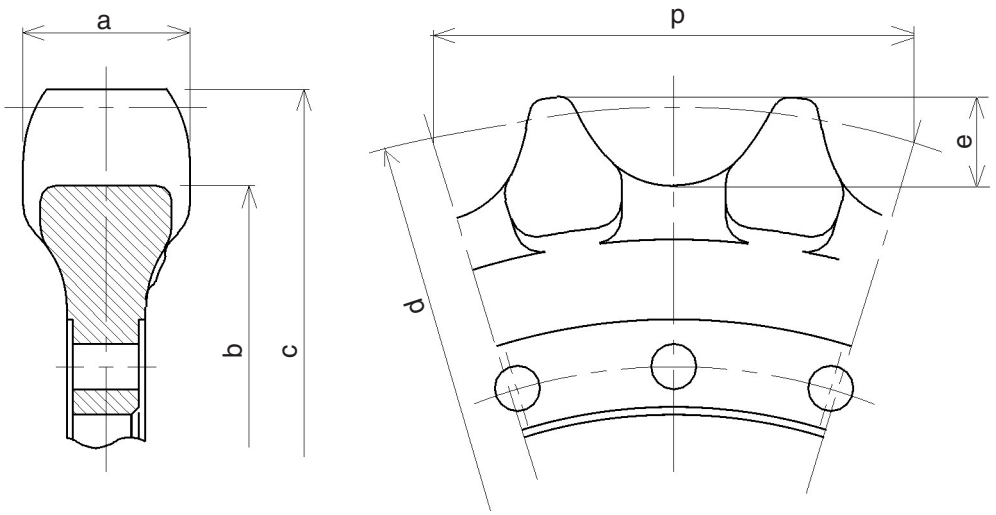

Note:For measuring gauges, refer to the reference data for inspection gauge.
Use the Maintenance Standard Value Table for determination.

Part Name	Symbol	Measured dimensions (mm)	Determination	Measures
Drive sprocket	a		Good / No good	Buildup welding or replacement
	b	Diameter:	Good / No good	
	c	Diameter:	Good / No good	
	d	Diameter:	Good / No good	
	e		Good / No good	
	p		Good / No good	

https://truckmanualshub.com/

2. Take-up Roller

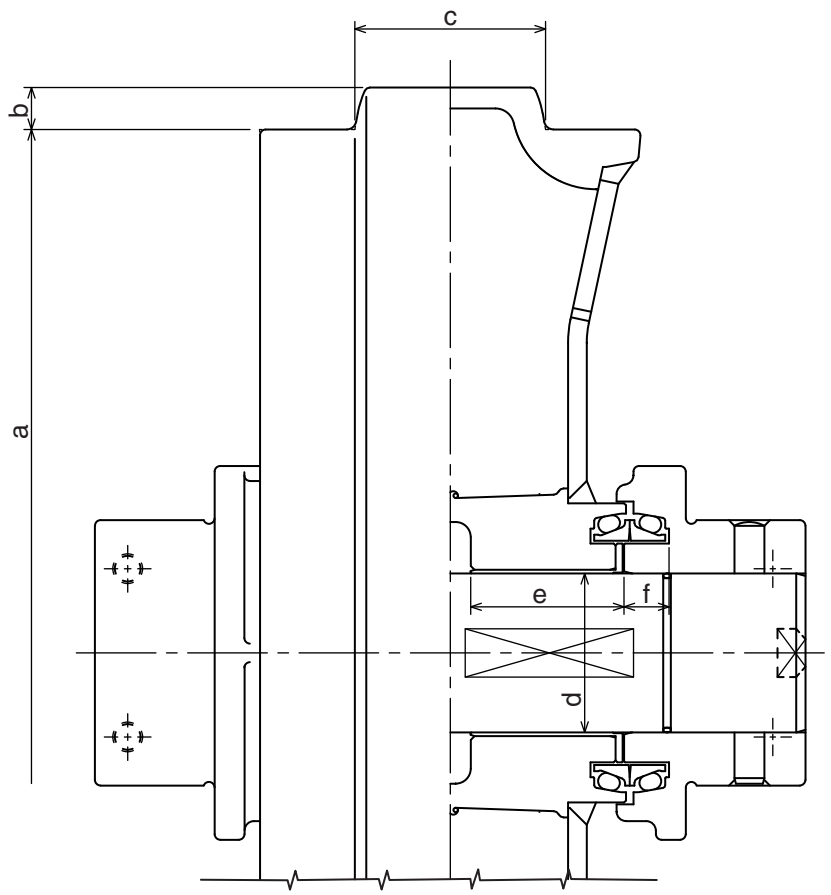

Note:For measuring gauges, refer to the reference data for inspection gauge.
Use the Maintenance Standard Value Table for determination.

Part Name	Symbol	Measured dimensions (mm)	Determination	Measures
Take-up roller	a	Diameter:	Good / No good	Buildup welding or replacement
	b		Good / No good	
	c		Good / No good	
Shaft	d	Diameter:	Good / No good	Replacement
Bushing	d	Diameter:	Good / No good	Replacement
	e		Good / No good	
Hub	f		Good / No good	Replacement

https://truckmanualshub.com/

3. Upper Roller

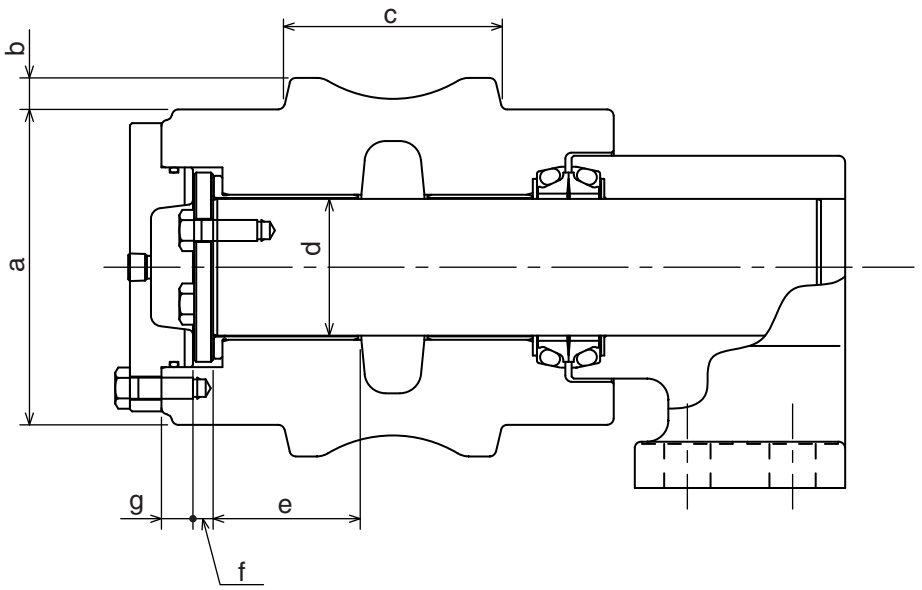

Note: For measuring gauges, refer to the reference data for inspection gauge.
Use the Maintenance Standard Value Table for determination.

Part Name	Symbol	Measured dimensions (mm)	Determination	Measures
Upper roller	a	Diameter:	Good / No good	Buildup welding or replacement
	b		Good / No good	
	c		Good / No good	
Shaft	d	Diameter:	Good / No good	Replacement
Bushing	d	Diameter:	Good / No good	Replacement
Bushing	e		Good / No good	Replacement
Thrust plate	f		Good / No good	Replacement
Cover	g		Good / No good	Replacement

https://truckmanualshub.com/

4. Lower Roller

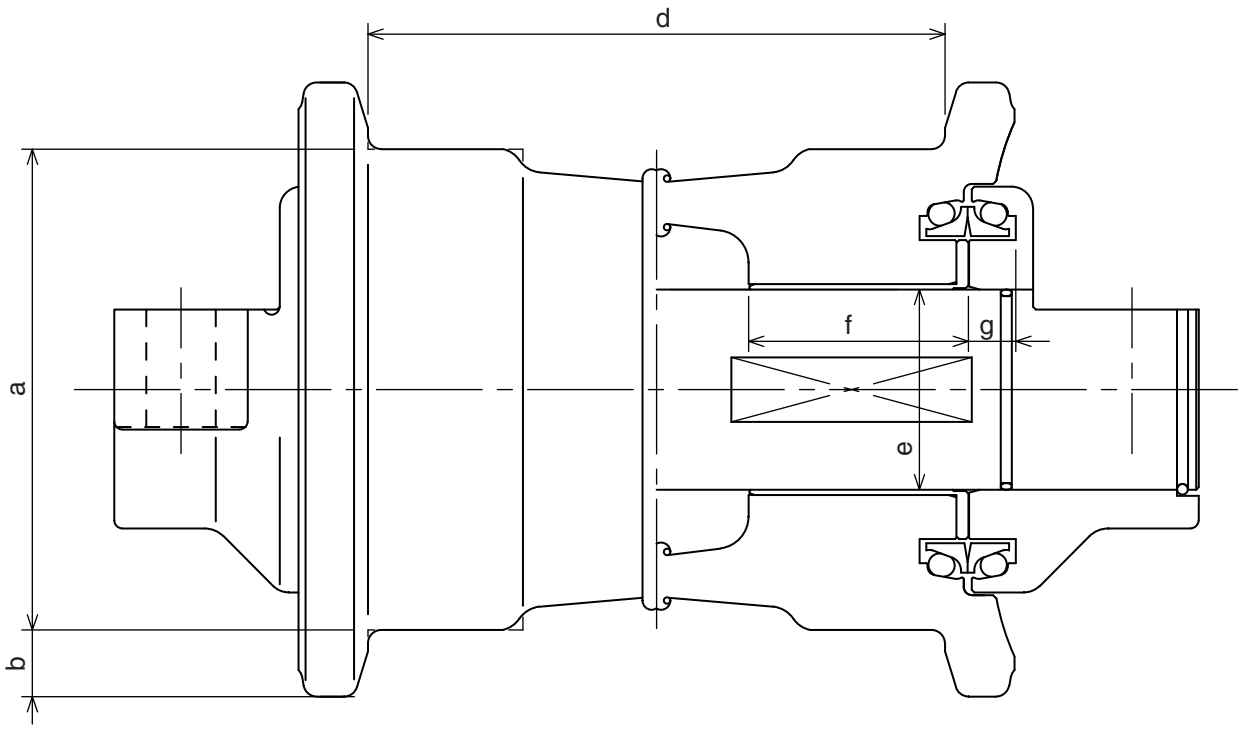

Note:For measuring gauges, refer to the reference data for inspection gauge.
Use the Maintenance Standard Value Table for determination.

Part Name	Symbol	Measured dimensions (mm)	Determination	Measures
Lower roller	a	Diameter:	Good / No good	Buildup welding or replacement
	b		Good / No good	
	d		Good / No good	
Shaft	e	Diameter:	Good / No good	Replacement
Bushing	e	Diameter:	Good / No good	Replacement
	f		Good / No good	
Collar	g		Good / No good	Replacement

https://truckmanualshub.com/

5. Track Shoe (Grouser Shoe)

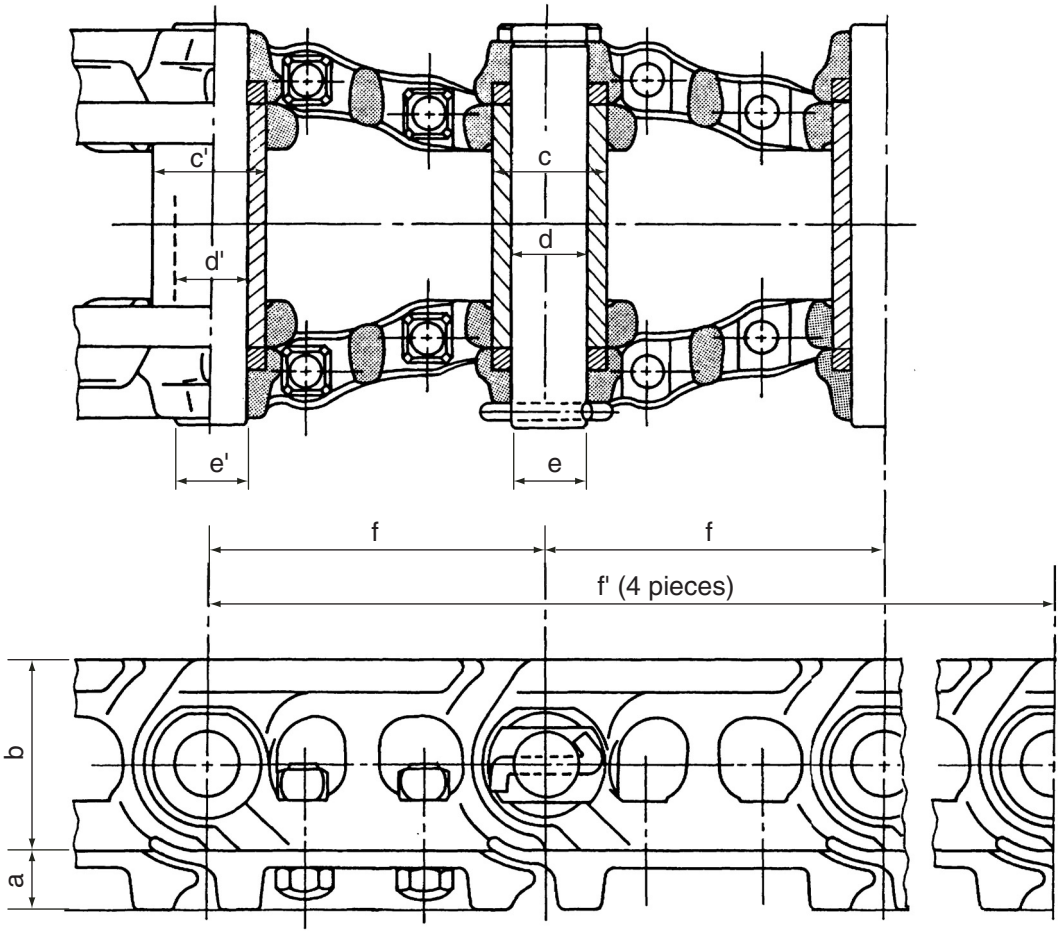

Note: *Use the Maintenance Standard Value Table* for determination.

Part Name	Symbol	Measured dimensions (mm)	Determination	Measures
Shoe plate	a		Good / No good	Replacement
Link	b		Good / No good	Buildup welding or replacement
Master bushing	c	Diameter:	Good / No good	Replacement
	d	Diameter:	Good / No good	
Master pin	e	Diameter:	Good / No good	Replacement
Link pitch	f		Good / No good	Replacement
	f'		Good / No good	
Track bushing	c'	Diameter:	Good / No good	Replacement
	d'	Diameter:	Good / No good	
Track pin	e'	Diameter:	Good / No good	Replacement

https://truckmanualshub.com/

6. Attachment (Back Hoe)

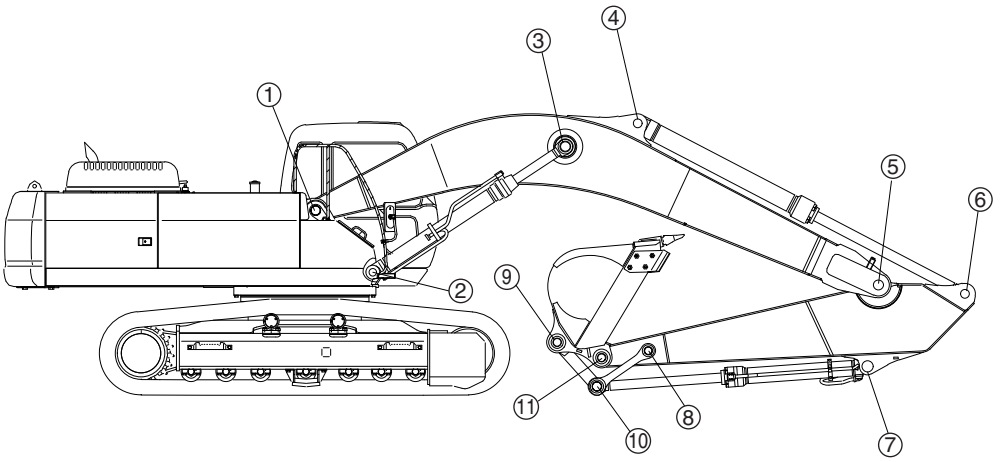

① Boom and swing frame mounting section

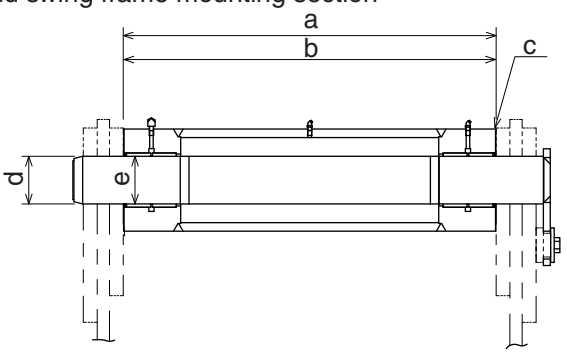

② Boom cylinder and swing frame mounting section

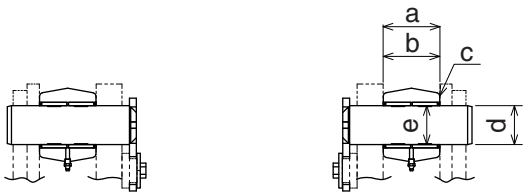

Note: *Use the Maintenance Standard Value Table* for determination.

Part Name	Symbol	Measured dimensions (mm)	Determination	Measures
① Boom and swing frame mounting section				
Swing frame	a		Good / No good	—
Boom	b		Good / No good	Replacement
Clearance	c (a - b)		Good / No good	Adjust by shims
Pin	d	Diameter:	Good / No good	Replacement
Bushing (boom)	e	Diameter:	Good / No good	Replacement
② Boom cylinder and swing frame mounting section				
Swing frame	a		Good / No good	—
Boom cylinder (foot section)	b		Good / No good	Replacement
Clearance	c (a - b)		Good / No good	Adjust by shims
Pin	d	Diameter:	Good / No good	Replacement
Bushing (boom cylinger)	e	Diameter:	Good / No good	Replacement

https://truckmanualshub.com/

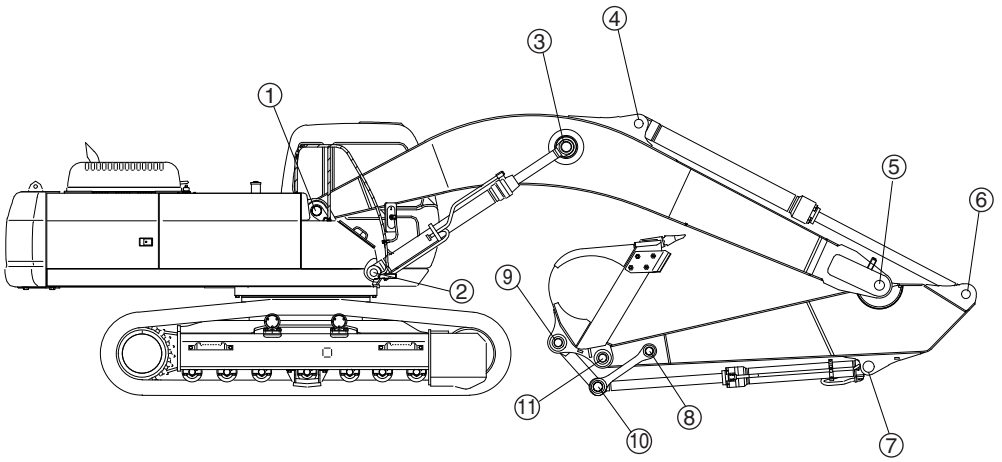

③ Boom and boom cylinder mounting section

④ Boom and arm cylinder mounting section

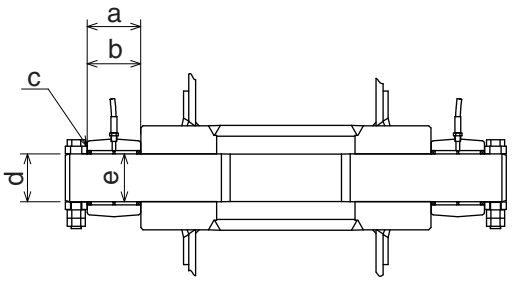

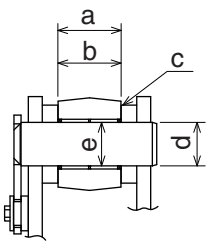

Note: *Use the Maintenance Standard Value Table* for determination.

Part Name	Symbol	Measured dimensions (mm)	Determination	Measures
③ Boom and boom cylinder mounting section				
Boom cylinder (top section)	a		Good / No good	Replacement
Boom	b		Good / No good	Replacement
Clearance	c		Good / No good	Adjust by shims
Pin	d	Diameter:	Good / No good	Replacement
Bushing (boom cylinder)	e	Diameter:	Good / No good	Replacement
④ Boom and arm cylinder mounting section				
Boom	a		Good / No good	Replacement
Arm cylinder (foot section)	b		Good / No good	Replacement
Clearance	c (a - b)		Good / No good	Adjust by shims
Pin	d	Diameter:	Good / No good	Replacement
Bushing (arm cylinder)	e	Diameter:	Good / No good	Replacement

https://truckmanualshub.com/

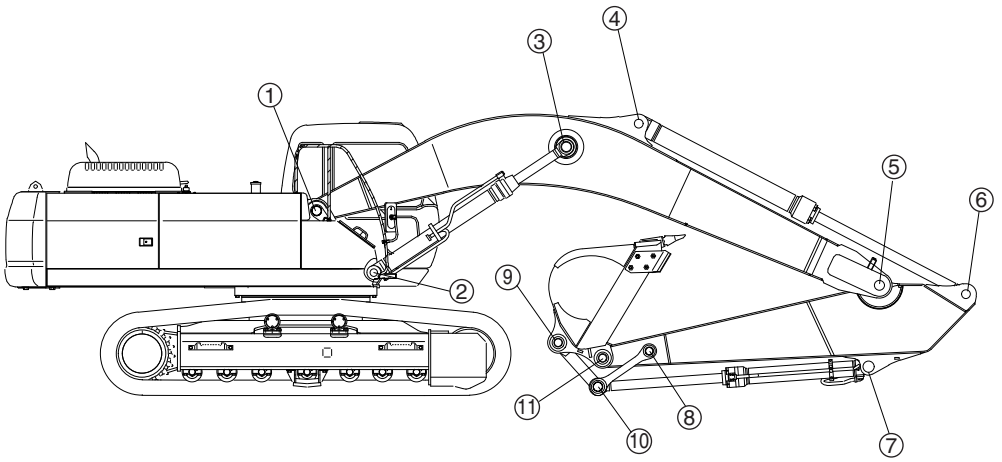

⑤ Boom and arm mounting section

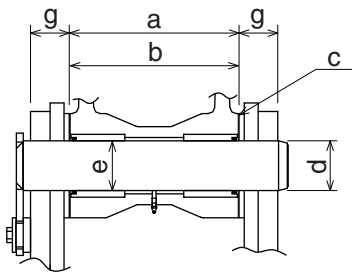

Note: *Use the Maintenance Standard Value Table* for determination.

Part Name	Symbol	Measured dimensions (mm)	Determination	Measures
⑤ Boom and arm mounting section				
Boom	a		Good / No good	Replacement
Arm	b		Good / No good	Replacement
Clearance	c (a - b)		Good / No good	Adjust by shims
Pin	d	Diameter:	Good / No good	Replacement
Bushing (arm)	e	Diameter:	Good / No good	Replacement
Boom	g		Good / No good	Replacement

https://truckmanualshub.com/

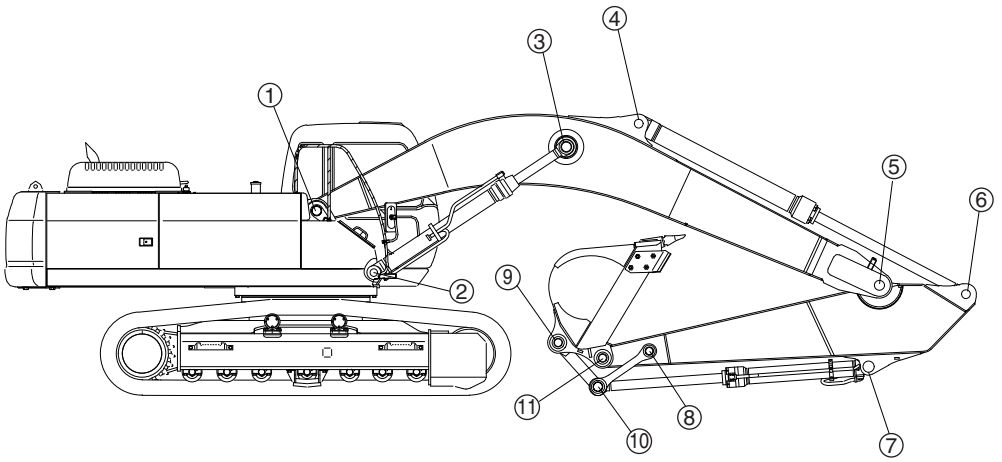

⑥ Arm and arm cylinder mounting section

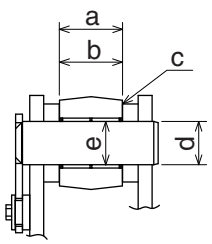

⑦ Arm and bucket cylinder mounting section

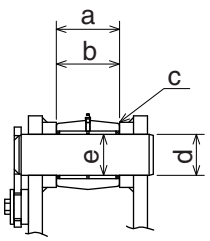

Note: *Use the Maintenance Standard Value Table* for determination.

Part Name	Symbol	Measured dimensions (mm)	Determination	Measures
⑥ Arm and arm cylinder mounting section				
Arm	a		Good / No good	Replacement
Arm cylinder (top section)	b		Good / No good	Replacement
Clearance	c (a - b)		Good / No good	Adjust by shims
Pin	d	Diameter:	Good / No good	Replacement
Bushing (arm cylinder)	e	Diameter:	Good / No good	Replacement
⑦ Arm and bucket cylinder mounting section				
Arm	a		Good / No good	Replacement
Bucket cylinder (foot section)	b		Good / No good	Replacement
Clearance	c (a - b)		Good / No good	Adjust by shims
Pin	d	Diameter:	Good / No good	Replacement
Bushing (bucket cylinder)	e	Diameter:	Good / No good	Replacement

https://truckmanualshub.com/

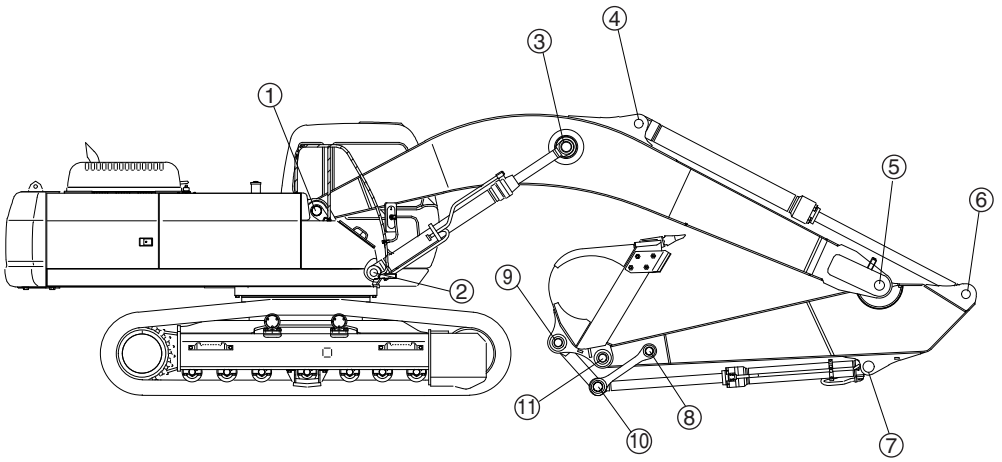

⑧ Arm and arm link mounting section

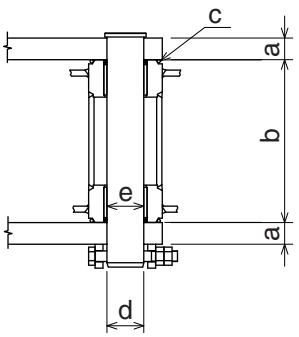

⑨ Bucket and bucket link mounting section

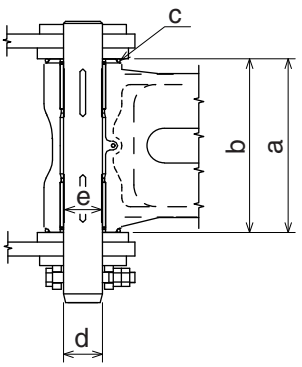

Note: *Use the Maintenance Standard Value Table* for determination.

Part Name	Symbol	Measured dimensions (mm)	Determination	Measures
⑧ Arm and arm link mounting section				
Arm link	a		Good / No good	Replacement
Arm	b		Good / No good	Replacement
Clearance	c		Good / No good	Adjust by shims
Pin	d	Diameter:	Good / No good	Replacement
Bushing (arm)	e	Diameter:	Good / No good	Replacement
⑨ Bucket and bucket link mounting section				
Bucket	a		Good / No good	Replacement
Bucket link	b		Good / No good	Replacement
Clearance	c (a - b)		Good / No good	Adjust by shims
Pin	d	Diameter:	Good / No good	Replacement
Bushing (bucket link)	e	Diameter:	Good / No good	Replacement

https://truckmanualshub.com/

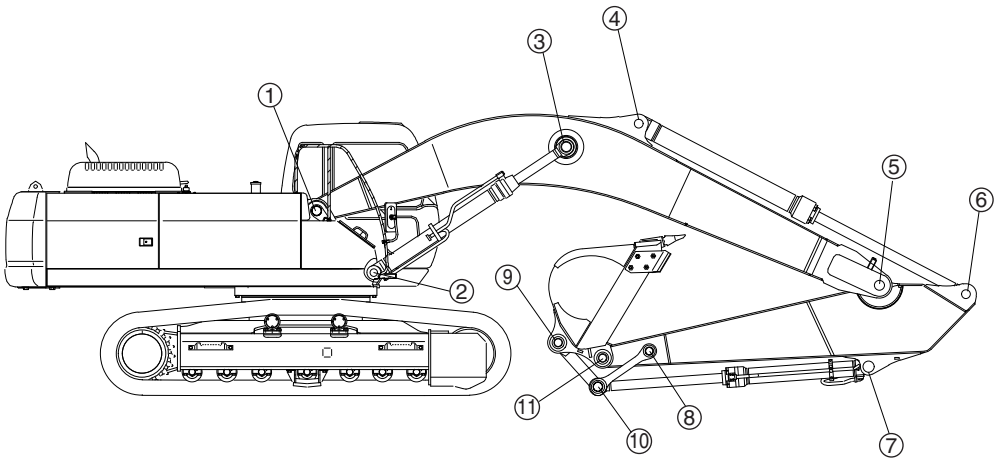

⑩ Bucket link and bucket cylinder mounting section

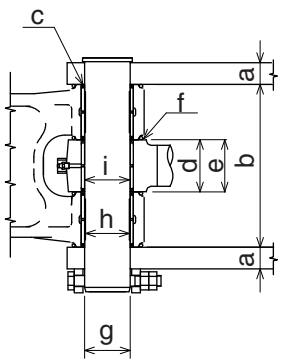

Note: *Use the Maintenance Standard Value Table* for determination.

Part Name	Symbol	Measured dimensions (mm)	Determination	Measures
⑩ Bucket link and bucket cylinder mounting section				
Arm link	a		Good / No good	Replacement
Bucket link	b		Good / No good	Replacement
Clearance	c		Good / No good	Adjust by shims
Bucket link	d		Good / No good	Replacement
Bucket cylinder (top section)	e		Good / No good	Replacement
Clearance	f (d - e)		Good / No good	Adjust by shims
Pin	g	Diameter:	Good / No good	Replacement
Bushing (bucket link)	h	Diameter:	Good / No good	Replacement
Bushing (bucket cylinder)	i	Diameter:	Good / No good	Replacement

https://truckmanualshub.com/

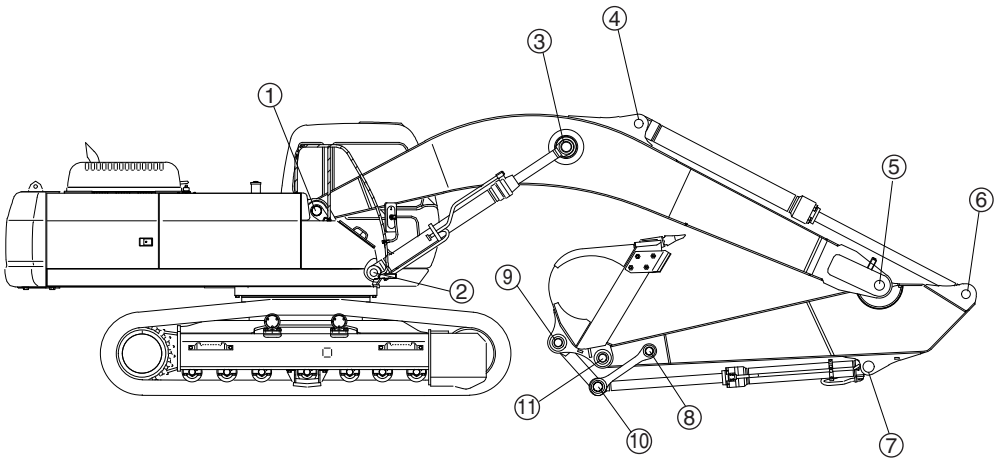

⑪ Bucket and arm mounting section

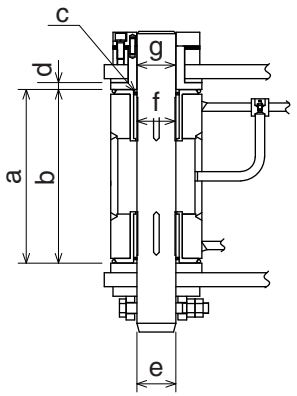

Note: *Use the Maintenance Standard Value Table* for determination.

Part Name	Symbol	Measured dimensions (mm)	Determination	Measures
⑪ Bucket and arm mounting section				
Bucket	a		Good / No good	Replacement
Arm	b		Good / No good	Replacement
Clearance	c (a - b)		Good / No good	Adjust by shims
Bushing (bucket)	d		Good / No good	Replacement
Pin	e	Diameter:	Good / No good	Replacement
Bushing (arm)	f	Diameter:	Good / No good	Replacement
Bushing (bucket)	g	Diameter:	Good / No good	Replacement

https://truckmanualshub.com/

Maintenance Standards Value Table-Lower

(Units : mm)

No.	Symbol	Part Name	Reference value	Use limit
1	a	Drive sprocket	83	73
	b		ϕ 660.7	ϕ 649.2
	c		ϕ 748	ϕ 738
	d		ϕ 732.5	—
	e		40	45
	p		215.9	—
2	a	Take-up roller	ϕ 560	ϕ 550
	b		22.5	—
	c		102	92
	d	Shaft	ϕ 85	ϕ 84
	d	Bushing	ϕ 85	ϕ 86
	e		82	81
	f	Hub	24	23.6
3	a	Upper roller	ϕ 150	ϕ 140
	b		15	—
	c		104	—
	d	Shaft	ϕ 65	ϕ 64
	d	Bushing	ϕ 65	ϕ 66
	e		69	68
	f	Thrust plate	9	8.5
	g	Cover	15	—
4	a	Lower roller	ϕ 180	ϕ 170
	b		25	20
	d		216	224
	e	Shaft	ϕ 75	ϕ 74
	e	Bushing	ϕ 75	ϕ 76
	f		ϕ 82	ϕ 81
	g	Collar	17.5	17.0
5	a	Shoe plate	49	34
	b	Link	129	124
	c	Master bushing	ϕ 71	ϕ 67
	d		ϕ 47	—
	e	Master pin	ϕ 46.83	—
	f	Link pitch	215.9	220.2
	f'	Link pitch (4 pieces)	863.6	880.8
	c'	Track bushing	ϕ 71	ϕ 67
	d'		ϕ 47	—
	e'	Track pin	ϕ 47	—

https://truckmanualshub.com/

Maintenance Standards Value Table-Attachment

(Units : mm)

No.	Symbol	Part Name	Reference value	Use limit
1	a	Swing frame	860	868
	b	Boom	857	855
	c	Clearance	3.0~5.5	Shim adjustment
	d	Pin	ϕ 110	ϕ 109
	e	Bushing (boom)	ϕ 110	ϕ 111.5
2	a	Swing frame	131	137
	b	Boom cylinder (foot section)	130	127
	c	Clearance	1.0~3.5	Shim adjustment
	d	Pin	ϕ 90	ϕ 89
	e	Bushing (boom cylinder)	ϕ 90	ϕ 91.5
3	a	Boom cylinder (top section)	123	120
	b	Boom	669	665
	c	Clearance	2.0~3.0	Shim adjustment
	d	Pin	ϕ 110	ϕ 109
	e	Bushing (boom cylinder)	ϕ 110	ϕ 111.5
4	a	Boom	146	152
	b	Arm cylinder (foot section)	145	143
	c	Clearance	0.5~3.0	Shim adjustment
	d	Pin	ϕ 100	ϕ 99
	e	Bushing (arm cylinder)	ϕ 100	ϕ 101.5
5	a	Boom	392	395
	b	Arm	387.7	389
	c	Clearance	4.3~4.9	Shim adjustment
	d	Pin	ϕ 115	ϕ 114
	e	Bushing (arm)	ϕ 115	ϕ 116.5
	g	Boom	89	87
6	a	Arm	146	151
	b	Arm cylinder (top section)	145	143
	c	Clearance	0.5~2.5	Shim adjustment
	d	Pin	ϕ 100	ϕ 99
	e	Bushing (arm cylinder)	ϕ 100	ϕ 101.5

https://truckmanualshub.com/

(Units : mm)

No.	Symbol	Part Name	Reference value	Use limit
7	a	Arm	146	152
	b	Bucket cylinder (foot section)	145	143
	c	Clearance	1.0~2.5	Shim adjustment
	d	Pin	ϕ 95	ϕ 94
	e	Bushing (bucket cylinder)	ϕ 95	ϕ 96.5
8	a	Arm link	50	47
	b	Arm	375	371
	c	Clearance	1.0~1.5	Shim adjustment
	d	Pin	ϕ 85	ϕ 84
	e	Bushing (arm)	ϕ 85	ϕ 86.5
9	a	Bucket	401	406
	b	Bucket link	400	397
	c	Clearance	1.0~3.5	Shim adjustment
	d	Pin	ϕ 90	ϕ 89
	e	Bushing (bucket link)	ϕ 90	ϕ 91.5
10	a	Arm link	50	48
	b	Bucket link	375	371
	c	Clearance	1.0~1.5	Shim adjustment
	d	Bucket link	121	123
	e	Bucket cylinder (top section)	120	118
	f	Clearance	1.0~2.0	Shim adjustment
	g	Pin	ϕ 105	ϕ 104
	h	Bushing (bucket link)	ϕ 105	ϕ 106.5
	i	Bushing (bucket cylinder)	ϕ 105	ϕ 106.5
11	a	Bucket	401	406
	b	Arm	400	397
	c	Clearance	0.8~3.7	Shim adjustment
	d	Bushing (bucket)	16	10
	e	Pin	ϕ 90	ϕ 89
	f	Bushing (arm)	ϕ 90	ϕ 91.5
	g	Bushing (bucket)	ϕ 90	ϕ 91.5

https://truckmanualshub.com/

List of Shims for Adjusting Attachment Gaps

(Units: mm)

Part No.	I.D.	O.D.	Shim Thickness	Material
KMV0650	30.2	50	0.4	SPCC
KMV0651	30.2	50	0.8	SPCC
KMV0652	30.2	50	1.6	SPHC
KMV0653	30.2	50	3.2	SPHC
KMV0654	30.2	50	4.5	SS00
KMV0655	30.2	50	6.0	SS00
KMV0912	32	45	0.4	SPCC
KMV0913	32	45	0.8	SPCC
KMV0914	32	45	1.2	SPCC
KHV0327	36	65	1.2	SPHC
KHV0316	36	70	1.2	SPHC
KHV0315	41	75	1.2	SPHC
KHV0324	41	80	1.2	SPHC
KHV0317	41	90	1.2	SPHC
KAV0058	43	90	1.6	SPHC
KHV0347	46	80	1.2	SPHC
KAV0180	46	80	1.6	SPHC
KAV0682	46	90	1.2	SPHC
KHV0299	46	100	1.2	SPHC
KHV0328	51	85	1.2	SPHC
KAV0160	51	85	1.6	SPHC
BHV1030	51	90	1.2	SPHC
BHV1031	51	90	2.6	SPHC
KHV0330	51	95	1.2	SPHC
KAV0813	51	100	1.2	SPHC
KAV1951	51	100	2.6	SPHC
KAV0061	51	101.6	1.6	SPHC
KHV0348	51	105	1.2	SPHC
KAV0805	51	120	1.2	SPHC
KAV0812	56	90	1.2	SPHC
KAV0558	56	100	1.2	SPHC
BHV1033	56	100	2.6	SPHC
KHV0298	56	105	1.2	SPHC
KAV0395	56	110	0.8	SPHC
KAV0060	56	110	1.6	SPHC
KAV0396	56	115	1.2	SPHC
KAV0427	56	120	1.2	SPHC
KMV0771	60.5	76	1.2	SPHC
KAV0161	61	90	1.6	SPHC

https://truckmanualshub.com/

(Units: mm)

Part No.	I.D.	O.D.	Shim Thickness	Material
KAV0811	61	110	1.2	SPHC
KNV0230	61	110	1.2	SPHC
KAV0059	61	110	1.6	SPHC
KHV0286	61	120	1.2	SPHC
KAV0801	61	130	1.2	SPHC
KMV0942	61	140	3.2	SPHC
KMV1246	61	160	1.2	SPHC
KMV0693	65.5	90	1.2	SPHC
KNV0538	66	100	1.2	SPHC
KLV0034	66	110	1.2	SPHC
KNV0535	66	120	1.2	SPHC
KMV0122	66	130	1.2	SPHC
KHV0273	66	150	1.2	SPHC
KHV0458	66	170	1.2	SPHC
KNV0696	71	110	1.2	SPHC
KNV0539	71	130	1.2	SPHC
KRV0823	71	130	1.2	SPHC
KMV0144	71	135	1.2	SPHC
KMV0145	71	135	2.6	SPHC
KMV0774	71	150	1.2	SPHC
KMV0775	71	150	2.6	SPHC
KMV0941	71	150	3.2	SPHC
KNV0189	71	150	1.2	SPHC
KRV1176	76	130	1.2	SPHC
KRV1177	76	140	1.2	SPHC
KRV1584	76	140	1.2	SPHC
KHV0169	76	140	1.2	SPHC
KNV0534	76	160	1.2	SPHC
KRV2264	76	180	1.2	SPHC
KAV0776	77	120	1.2	SPHC
KSV0141	78	170	1.2	SPHC
KSV0142	78	170	2.6	SPHC
KSV0143	78	170	3.2	SS00
KAV0095	81	105	1.6	SPHC
KLV0170	81	110	1.2	SPHC
KRV1197	81	140	1.2	SPHC
KRV0822	81	150	1.2	SPHC
KRP1350	81	150	2.6	SPHC
KLV0035	81	170	1.2	SPHC

https://truckmanualshub.com/

(Units: mm)

Part No.	I.D.	O.D.	Shim Thickness	Material
KSP0408	81	200	1.2	SPHC
KSP0409	81	200	2.6	SPHC
KBV0122	82	120	3.2	SS00
KBV0123	82	120	4.5	SS00
KBV0124	82	120	6.0	SS400
KBV0373	82	180	1.0	SPCC
KRV1178	86	130	1.2	SPHC
KRV1585	86	150	1.2	SPHC
KHV0170	86	150	1.2	SPHC
KBV0389	87	210	1.0	SPCC
KBV0390	87	210	1.6	SPCC
BHV1030	90	51	1.2	SPHC
KBV0837	91	135	1.2	SPHC
KSV0477	91	145	1.2	SPHC
KSP0411	91	145	2.6	SPHC
KMV0121	91	159	1.2	SPHC
KBV0769	91	160	1.2	SPHC
KSP0269	91	160	2.6	SPHC
KBV0764	91	165	1.2	SPHC
KRV0559	91	180	1.2	SPHC
KRV1180	91	190	1.2	SPHC
KSP0412	91	200	1.2	SPHC
KSP0413	91	200	2.6	SPHC
KBV0381	92	180	1.0	SPCC
KBV0382	92	180	1.6	SPCC
KBV0383	92	180	2.0	SPCC
KBV0384	92	180	3.2	SS00
KBV0377	92	220	1.0	SPCC
KBV1749	96	140	1.2	SPHC
KNV0468	96	150	1.2	SPHC
KSP0828	96	150	1.2	SPHC
KBV1629	96	170	1.2	SPHC
KBV0361	97	250	1.0	SPCC
KBV0362	97	250	1.6	SPCC
BHV1032	100	56	1.2	SPHC
KSV0478	101	160	1.2	SPHC
KSP0415	101	160	2.6	SPHC
KSP0416	101	180	1.2	SPHC
KSP0417	101	180	2.6	SPHC
KBV0474	101	219	1.2	SPHC

https://truckmanualshub.com/

(Units: mm)

Part No.	I.D.	O.D.	Shim Thickness	Material
KBV0369	102	210	1.0	SPCC
KSV0138	103	190	1.2	SPHC
KSV0139	103	190	2.6	SPHC
KSV0140	103	190	3.2	SS00
KSV0135	103	213	1.2	SPHC
KSV0136	103	213	2.6	SPHC
KSV0137	103	213	3.2	SS00
KSP0827	106	170	1.2	SPHC
KHV0190	111	150	1.2	SPHC
KSP0418	111	180	1.2	SPHC
KSP0419	111	180	2.6	SPHC
KTV0533	111	190	1.2	SPHC
KSV0476	111	230	1.2	SPHC
KBV0214	112	150	6.0	SS400
KBV0215	112	150	9.0	SS400
KBV0357	112	270	1.0	SPCC
KHV0193	121	155	1.2	SPHC
KMV1517	121	220	0.4	SPHC
KMV1518	121	220	0.6	SPHC
KMV1519	121	220	0.8	SPHC
KHV0296	121	230	1.2	SPHC
KTV0534	121	250	1.2	SPHC
KWV0101	131	170	1.2	SPHC
KSV0839	131	200	1.2	SPHC
KHV0287	131	240	1.2	SPHC
KTV0850	141	225	1.2	SPHC
KHV0297	141	240	1.2	SPHC
KHV0288	151	300	1.2	SPHC
KUV0080	171	280	1.2	SPHC

https://truckmanualshub.com/

List of Shims for Adjusting Attachment Gaps (for Boom Foot)

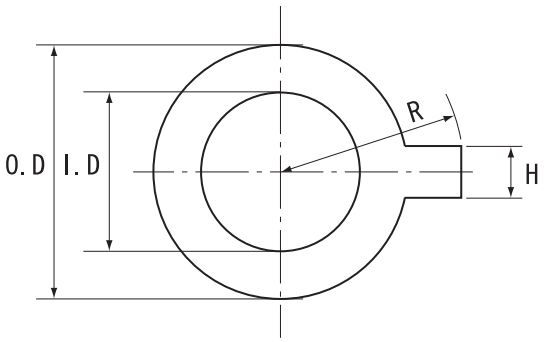

Part No.	I.D.	O.D.	R	H	Shim Thickness	Material
KNV1132	76	160	100	30	1.2	SPHC
KRV2390	91	190	115	30	1.2	SPHC
KBV1441	101	220	130	30	1.2	SPHC
KBV1748	101	230	135	30	1.2	SPHC
KSV1805	111	240	140	30	1.2	SPHC

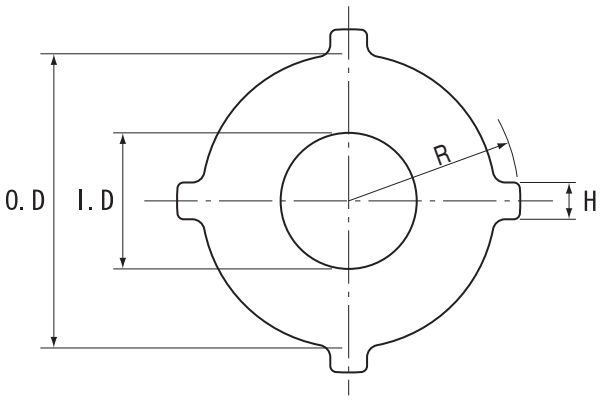

Part No.	I.D.	O.D.	R	H	Shim Thickness	Material
KSV1930	111	240	140	30	1.0	Urethone
KSV11380	111	240	140	30	2.0	Urethone
KSV1931	116	240	140	30	1.0	Urethone
KSV11390	116	240	140	30	2.0	Urethone
KWV0097	141	280	160	50	1.0	Urethone
KWV10510	141	280	160	50	2.0	Urethone
KWV0096	141	300	180	50	1.0	Urethone
KWV10500	141	300	180	50	2.0	Urethone
KUV10150	141	300	170	30	1.0	Urethone
KUV10160	141	300	170	30	2.0	Urethone
KUV10130	151	300	170	30	1.0	Urethone
KUV10140	151	300	170	30	2.0	Urethone

https://truckmanualshub.com/

Inspection Gauges

1. For Drive Sprocket Use

(Units: mm)

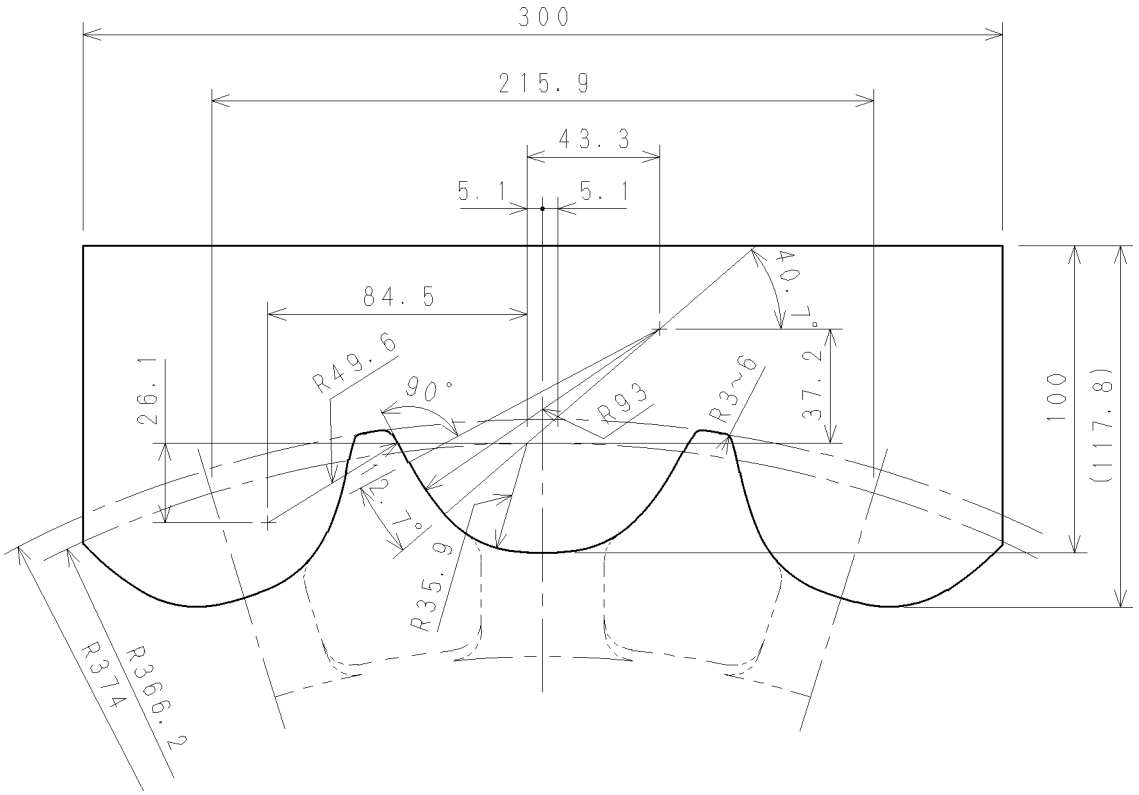

2. For Take-up Roller Use

(Units: mm)

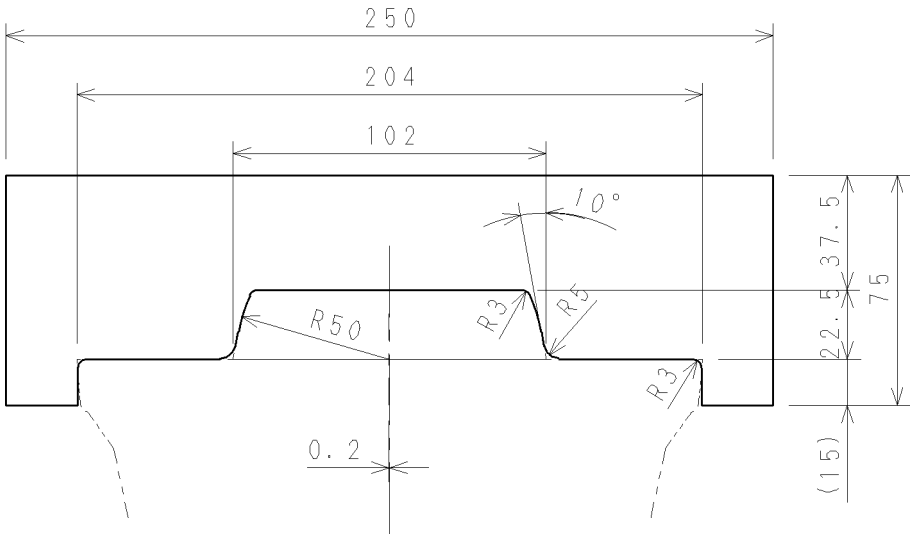

https://truckmanualshub.com/

3. For Upper Roller Use

(Units: mm)

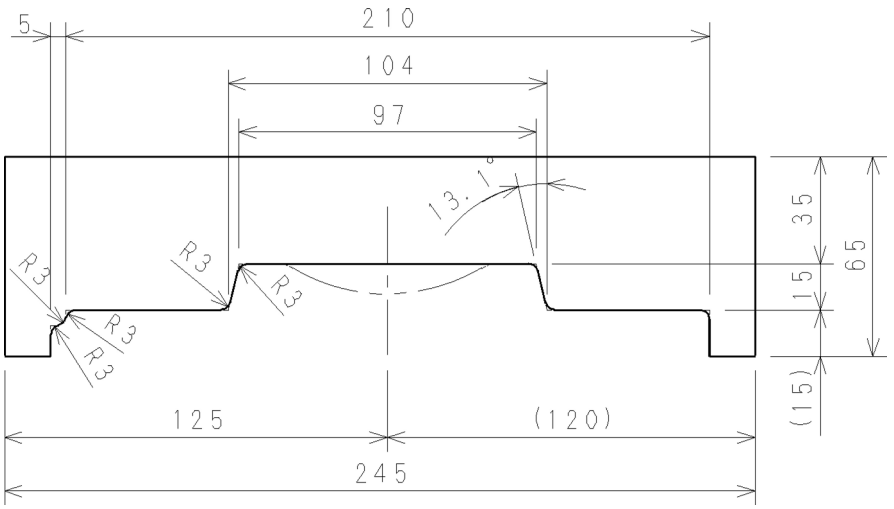

4. For Lower Roller Use

(Units: mm)

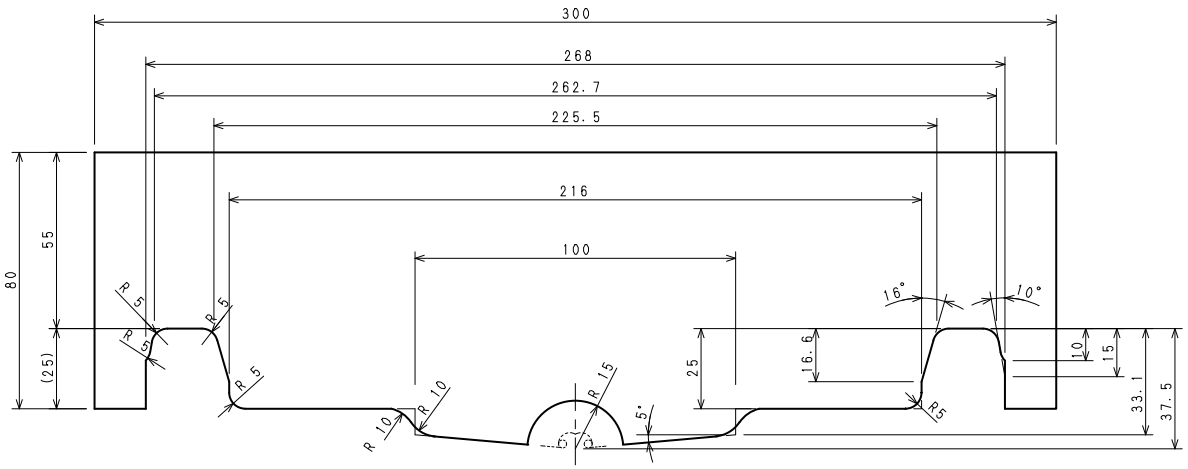

https://truckmanualshub.com/

Hydraulic Pump Maintenance

1. Pump Main Body – Disassembling and Assembling Instructions

(1) Tools

Tools required for disassembling and assembling K3V/K5V pump are shown in the following table. Bolts and plugs are different depending on the type. Circles (O) indicate required tools.

Tool name and size		Pump type				Part Name			
Tool name	B	K5V80 K3V63	K5V140 K3V112	K3V140	K5V200 K3V180	Hexagon socket head bolt	Rc filling plug (Rc screw)	PO piug (G screw)	Hexagon screw set screw
Hexagon bar spanner 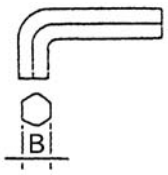	2					Å|	Å|	Å|	M4
	2.5					Å|	Å|	Å|	M5
	3					Å|	Å|	Å|	M6
	4	Åõ	Åõ	Åõ	Åõ	M5	BP-1/16	Å|	M8
	5	Åõ	Åõ	Åõ	Åõ	M6	BP-1/8	Å|	M10
	6	Åõ	Åõ	Åõ	Åõ	M8	BP-1/4	PO-1/4	M12 M14
	8	Åõ		Åõ	Åõ	M10	BP-3/8	PO-3/8	M16 M18
	10					M12	BP-1/2	PO-1/2	M20
	12					M14	–	–	–
	14	Åõ				M16 M18	BP-3/4	PO-3/4	–
	17		Åõ	Åõ	Åõ	M20 M22	BP-1	PO-1, 1 1/4, 1 1/2	–
	19					M24 M27	–	–	–
	21					–	–	–	–
	22					M30	–	PO-2	–
Ring spanner Socket wrench Double head (single head) wrench	19	Åõ	Åõ	Åõ	Åõ	M12	M12	VP-1/4	–
	22					–	–	VP-3/8	–
	24		Åõ	Åõ	Åõ	M16	M16	–	–
	27	Åõ		Åõ	Åõ	M18	M18	VP-1/2	–
	30		Åõ	Åõ	Åõ	M20	M20	–	–
	36		Åõ	Åõ	Åõ	–	–	VP-3/4	–
	41					–	–	VP-1	–
	50					–	–	VP-11/4	–
	55					–	–	VP-11/2	–
Adjustable wrench	–					1 Medium size			
Screwdriver	–	Åõ	Åõ	Åõ	Åõ	2 Minus type screwdrivers, medium size			
Hammer	–	Åõ	Åõ	Åõ	Åõ	1 Plastic hammer			
Pliers	–	Åõ	Åõ	Åõ	Åõ	TSR - 160 for stop ring			
Steel bar	–	Åõ	Åõ	Åõ	Åõ	Steel bar for key aproxmately 10 x 8 x 200			
Torque wrench	–	Åõ	Åõ	Åõ	Åõ	Wrenches capable of tightening to the torque spec.			

https://truckmanualshub.com/

(2) Disassembling instructions

Disassemble the pump following the steps described below after reading the entire disassembling instructions.
The numbers inside parentheses next to the part names indicate the part numbers on Attached Cross sectional View of Pump.
This is a disassembling instruction for both the single pump and the tandem type double pump. When disassembling, confirm the type of pump. In case of the double pump, be carefull not to mix up the parts for each pump.

No.	Procedures	Notes	Types
1	Choose a work area for disassambly.	1. Choose a clean area. 2. Place a rubber plate or cloth on a workbench to prevent scratches on the parts.	
2	Remove debris or rust from the surface of pump with cleaning oil or equivalent.		
3	Remove the drain port plug (468) and drain the oil from the pump casing.	In case of the tandem type pump. Drain from each plug on the front pump and rear pump.	
4	Disconnect the hexagon socket head bolts (412 and 413). 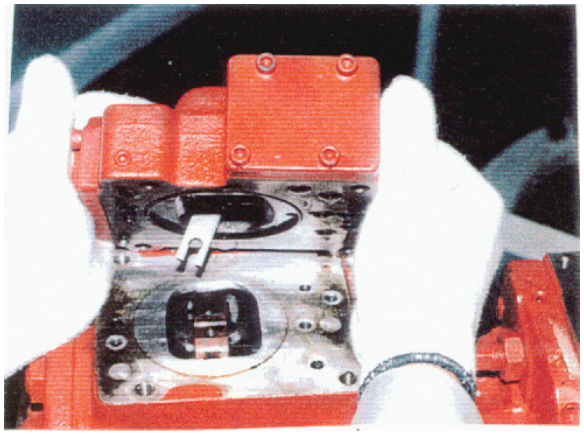	1. Refer to the regulator sub-section for disassembling the regulator.	
5	Loosen the hexagon socket head bolts (401), which lock the swash plate support (251), pump casing (271), and valve block (312).	If a gear pump and others are attached to the back side of the pump, this procedure should be done after disconnecting the gear pump and others.	

https://truckmanualshub.com/

No.	Procedures	Notes	Types
6	Place the pump horizontally with the regulator installation side facing down on the workbench and disconnect the pump casing (271) and valve block (312). 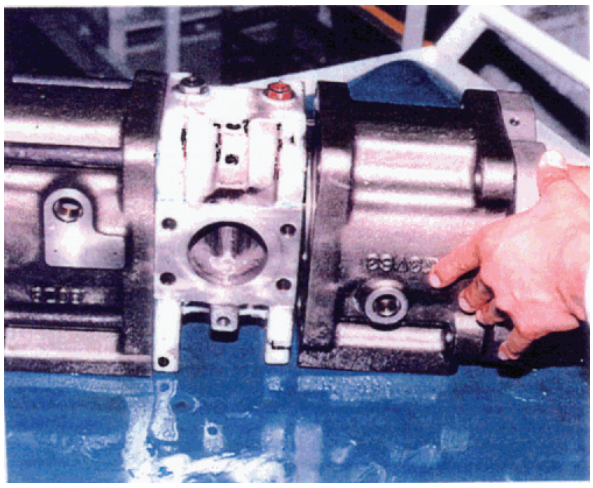	When placing the pump with the regulator installation side facing down, make sure that the workbench is covered with rubber plates or equivalent to prevent damage on the installation side.	
7	Pull out the cylinder block (141) from the pump casing (271) along the direction of the drive shaft (111) and remove the piston (151), retainer (153), spherical bush (156), and cylinder spring (157) at the same time. 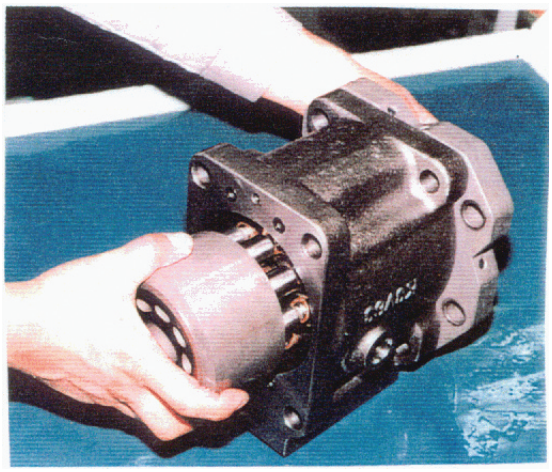	Handle with care to prevent scratches on the frictional surfaces of the cylinders, spherical bush, and swash plate, etc.	All types

https://truckmanualshub.com/

No.	Procedures	Notes	Types
8	Disconnect the hexagon socket head bolts (406) and remove the seal cover (F) (261). 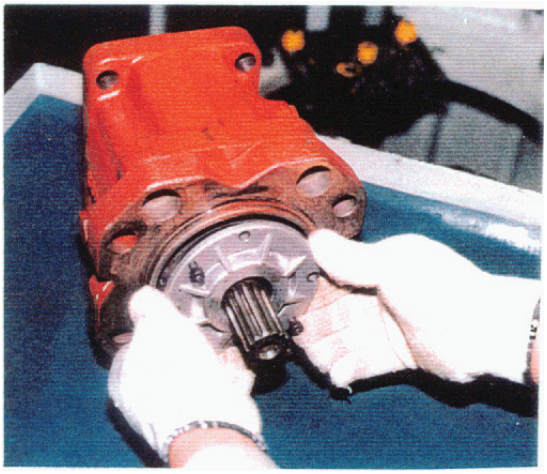	1. Remove the seal cover (F) with a bolt inserted in the tapping hole for easier operation. 2. Handle with care when removing the seal cover (F), to prevent scratches on the oil seal, which is attached to the seal cover (F).	Size of tapping hole: K5V80 M6 K3V63 M6 K3V112 M8 K3V140 M8 K3V180 M8 K3V280 M8 K5V140 M8 K5V200 M8
9	Tap lightly from the pump casing side on the mounting flange part on the swash plate support (251) and detach the swash plate support from the pump casing. 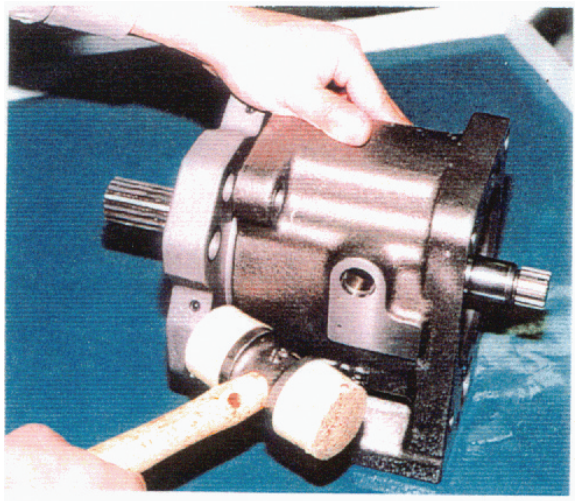		

https://truckmanualshub.com/

No.	Procedures	Notes	Types
10	Remove the shoe plate (211) and swash plate (212) from the pump casing (271). 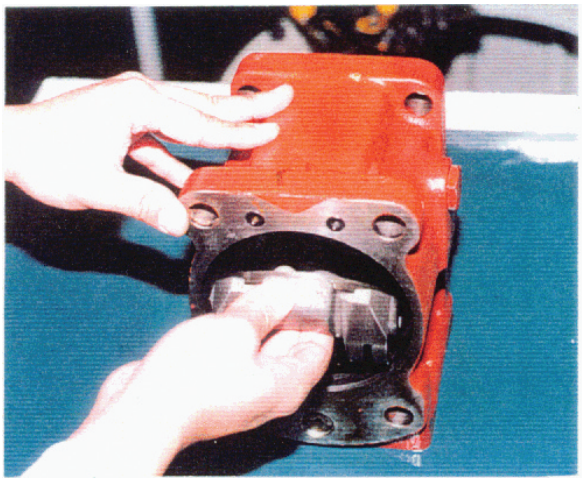		
11	Tap lightly on the shaft end of the drive shaft (111 and 113) with a plastic hammer or equivalent and remove the drive shaft from the swash plate support. 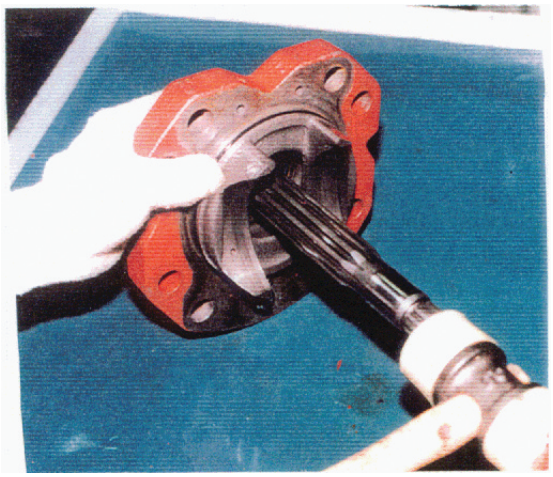		

https://truckmanualshub.com/

No.	Procedures	Notes	Types
12	Remove the valve plates (313 and 314) from the valve block (312). 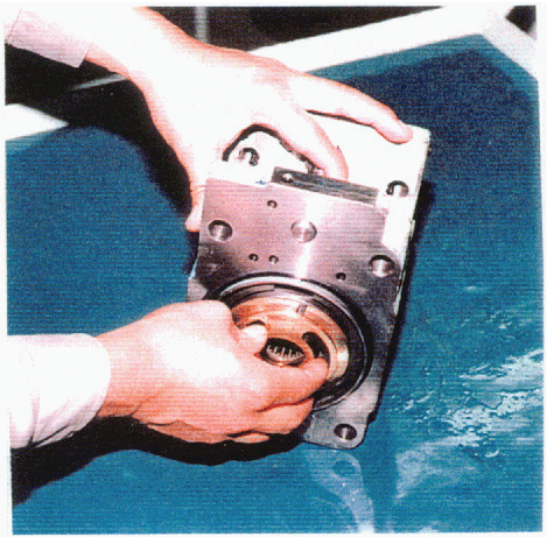	They may be removed during the procedure 6.	All types
13	If necessary, remove the stopper (L) (534), stopper (S) (535), servo piston (532), tilting pin (531) from the pump casing (271) and needle bearing (124) and the gear 1st (116) from the valve lock (312).	1. When removing the leaning pin, use appropriate tools to prevent damage to the top of the leaning pin. 2. Be careful not to damage the servo piston because Loctite is applied to the connecting part of the leaning pin and the servo piston. 3. The needle bearing should not be removed except when it wears out. 4. Do not loosen the hexagonal nut for the valve block and swash plate support. Loosening the nut causes the flow rate to change.	All types

https://truckmanualshub.com/

(3) Assembling instructions

Installation will be done in the opposite order of the disassembling procedure; however, keep in mind the following notes.

[1] Make sure to repair the damaged parts and prepare replacement parts beforehand.
[2] Clean each part with cleaning oil and install them after air-blowing them.
[3] When installing the sliding parts or bearings, make sure to apply clean lubricant.
[4] Replace sealing parts such as O-rings and oil seals with new one as a general rule.
[5] Use torque wrenches for each mounting bolt and plugs, etc. and tighten with the standard torque shown in Maintenance Standards.
[6] In case of a tandem pump, be careful not to mix up the parts for the front pump and rear pump.

No.	Procedures	Notes	Types
1	Install the swash plate support (251) on the pump casing (271) with light strokes of a hammer. 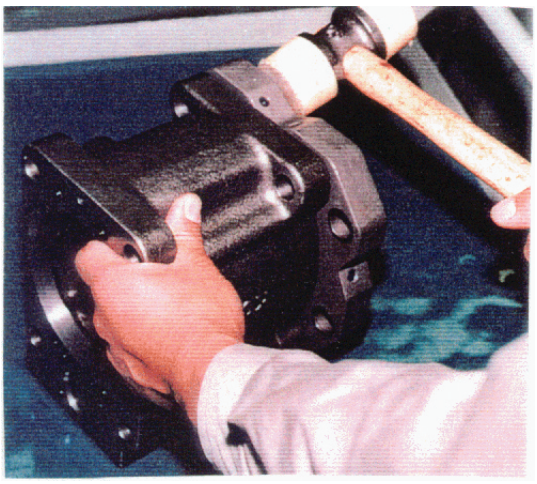	1. When you remove the servo piston, leaning pin, stopper (L), and stopper (S), install them on the pump casing before performing the further procedure. 2. When fastening the servo piston and leaning pin, use appropriate tools to prevent damages on the top of the leaning pin and feed back pin. Also, apply Loctite (medium strengh) to the threaded part.	All types
2	Place the pump casing with the regulator installation side facing down, push down the tilting pin (531) of the swash plate, and install the swash plate (212) on the swash plate support (251) properly. 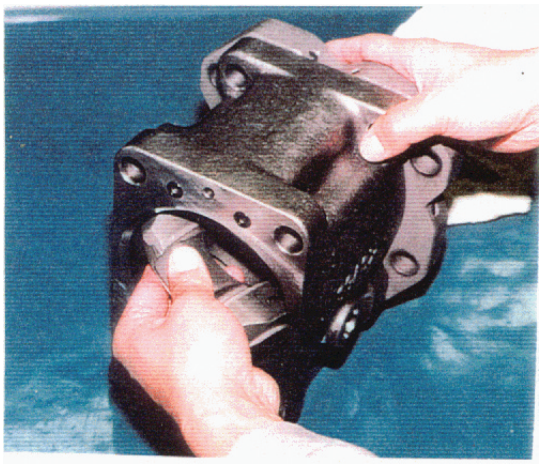	1. Make sure the swash plate moves smoothly by pushing it with finger tips of both hands. 2. Apply grease on the swash plate, swash plate support or other moving part for the easy installation of the drive shaft.	All types

https://truckmanualshub.com/

No.	Procedures	Notes	Types
3	Install the drive shaft (111), which are attached with the roller bearing (123), bearing spacer (127), and stop ring (824), on the swash plate support (251). 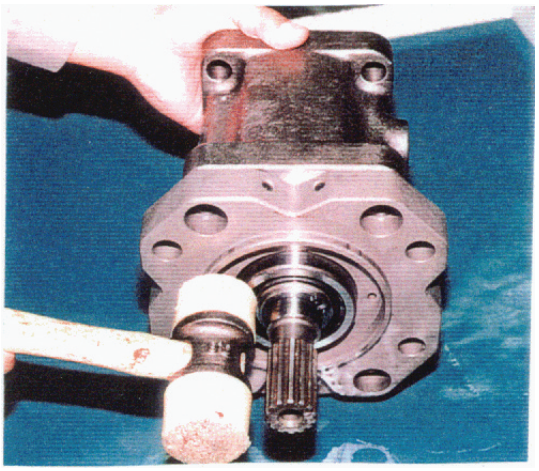	1. Do not hit the drive shaft with a hammer, etc. 2. Fit the outer ring of the bearing with a light strokes of a plastic hammer and make sure that it is fit firmly using a steel bar or equivalent.	All types
4	Assemble the seal cover (F) (261) with the pump casing (271), and secure them with hexagon socket head bolts (406). 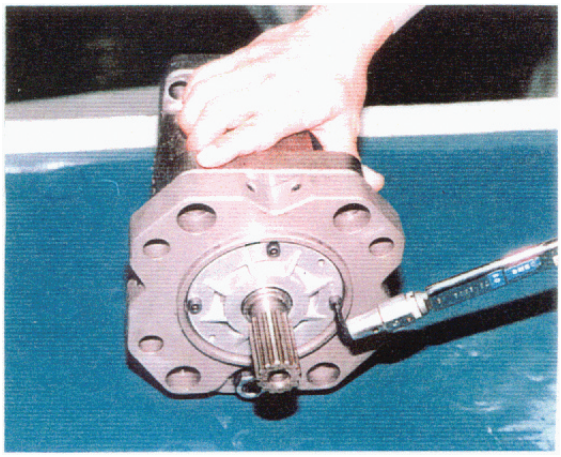	1. Apply grease lightly on the oil seal inside the seal cover (F). 2. Make sure not to damage the oil seal when handling it.	All types

https://truckmanualshub.com/

No.	Procedures	Notes	Types
5	Assemble the piston cylinder subassembly (cylinder block [141] piston sub [151,152] retainer [153], spherical bush [156], cylinder spring [157]), and insert them into the pump casing aligning the phase angle of the spline with the spherical bush and cylinder. 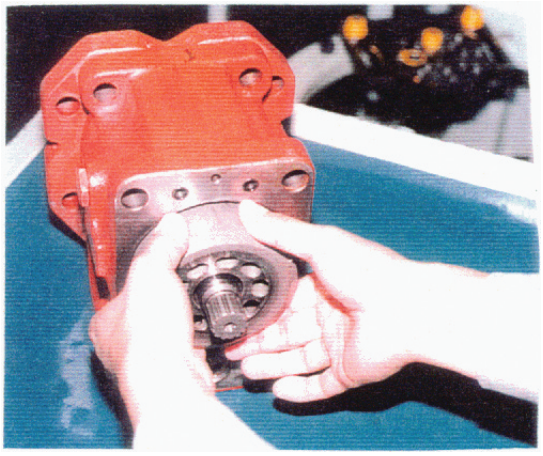		All types
6	Install the valve plate (313) on the valve block (312) with the pins aligned. 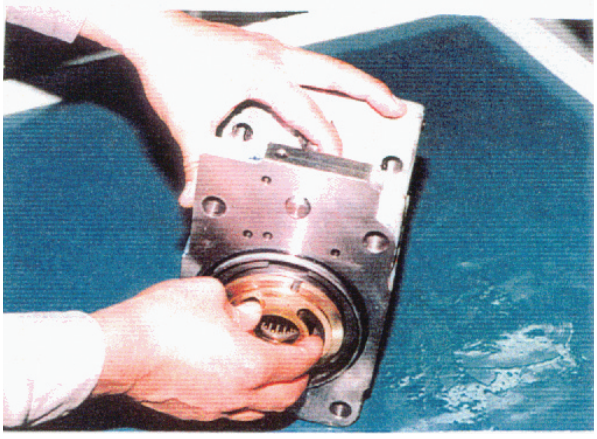	Be careful not to mix up the inlet and outlet direction on the valve plate.	

https://truckmanualshub.com/

No.	Procedures	Notes	Types
7	Install the valve block (312) on the pump casing (271), tighten the hexagon socket head bolts (401). 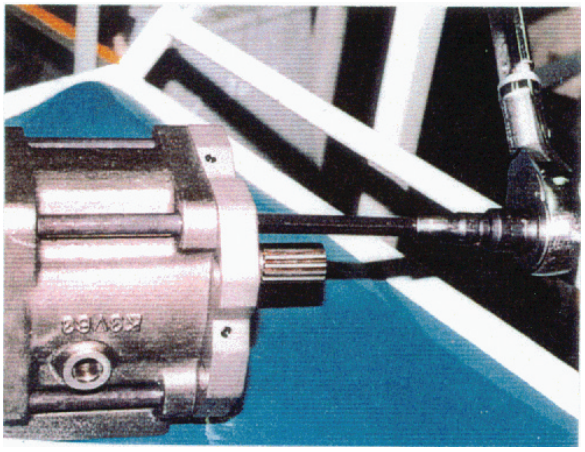	1. Assemble the pump on the rear side first. 2. Be careful not to mix up the orientation of the valve block. In case of the pump for clock wise rotation (viewed from the input shaft side) position of the discharge port :left side. [position of the regulator : above] In case of the pump for counter clock wise rotation (viewed from the input shaft side) position of the discharge port :right side. [position of the regulator port : above]	
8	Clamp the feedback pin of the tilting pin on the feedback lever of the regulator, install and fasten the hexagon socket head bolts (412, 413). 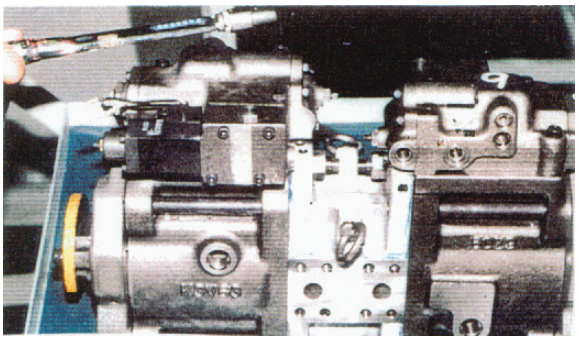	Be careful not to mix up the regulator for the front use and the rear use.	All types
9	Install the drain port plug (467) to complete the procedure.		All types

https://truckmanualshub.com/

2. Pump Main Body - Maintenance Standards

(1) Replacement standard for worn-out parts

If the wear on a part exceeds the standards below, replace or readjust the part.

Names and inspection items	Standard size / recommended value of replacement				Actions
	Pump types				
	K3V63, K5V80	K3V112, K5V140	K3V140	K3V180, K5V200	
Clearance between the piston and cylinder bore (D - d)	0.028 / 0.056	0.039 / 0.067	0.043 / 0.070	0.0375 / 0.078	Replacement of piston or cylinder
Loseness of piston, shoe, and caulking (d)	0 - 0.1 / 0.3	0 - 0.1 / 0.3	0 - 0.1 / 0.3	0 - 0.1 / 0.35	Replacement of piston and shoe assembly
Thickness of shoe (t)	3.9 / 3.7	4.9 / 4.7	5.4 / 5.0	5.4 / 5.0	Replacement of piston and shoe assembly
Free height of cylinder spring (L)	31.3 / 30.5	41.1 / 40.3	47.9 / 47.1	40.9 / 40.1	Replacement of cylinder spring
Combined height of pressure plate and spherical bush (H - h)	19.0 / 18.3	23.0 / 22.0	23.7 / 22.7	23.7 / 22.7	Replacement of pressure plate and spherical bush

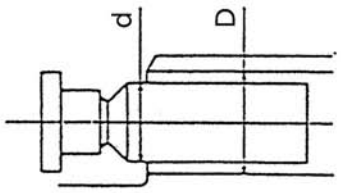

Clearance between the piston and cylinder bore : D-d

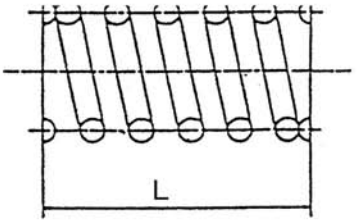

Free height of cylinder spring : L

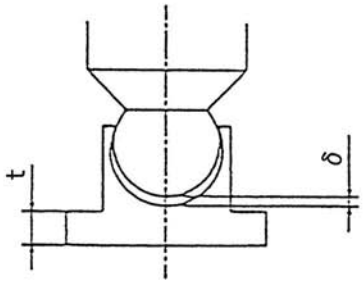

Loseness of piston, shoe, and caulking : δ
Thickness of shoe : t

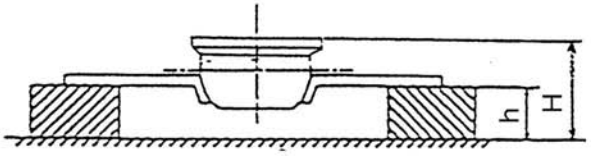

Combined height of pressure plate and spherical bush : H-h

https://truckmanualshub.com/

(2) Repair standards for cylinder, valve plate and swash plate (shoe plate)

Valve plate (sliding part) Swash plate (shoe plate area) Cylinder (sliding part) Each surface roughness	Surface roughness when modification is required	3-Z
	Standard face roughness (modified value)	0.4 z or less (lapping)

(3) Tightening torque

Part Name	Size	Tightening torque (N・m)	Tool name (mm)	
Hexagon socket head cap screw (Material SCM435)	M5	6.9	B=4	 Hexagon bar wrench
	M6	11.8	5	
	M8	29.4	6	
	M10	56.9	8	
	M12	98.1	10	
	M14	156.9	12	
	M16	235.4	14	
	M18	333.4	14	
	M20	431.5	17	
Rc plug (Material SCM45C) Note: Wrap seal tape with 1.5 to 2 rotations.	R 1/16	6.9	4	
	R 1/8	10.3	5	
	R 1/4	17.2	6	
	R 3/8	34.3	8	
	R 1/2	49.0	10	
PF Plug (Material S45C)	G 1/4	29.4	6	
	G 1/2	98.1	10	
	G 3/4	147.1	14	
	G 1	186.3	17	
	G 1 1/4	264.8	17	
	G 1 1/2	274.6	17	

https://truckmanualshub.com/

3. Troubleshooting

(1) General precautions

Following are countermeasures if you find abnormality during the operation of Kawasaki swash plate type axial piston pump and motor.
General precautions are:

[1] Considerations before starting repair.
Determine the characteristics of the abnormality before starting repair. Consider if the cause is originated from the wrong circuit, failure of regulator, or attached valve. Double check that the problem involves the pump motor.

[2] Before disassembling a system, make sure to read through the service manual. Conduct the disassembly in a correct manner.

[3] When disassembling a system, be careful not to allow dust to enter.

[4] Parts are finished precisely. Be careful not to damage them when handling.

(2) Troubleshooting for the pump main body

Pumps are often attached to a regulator, attached valves and attached pumps. It can be difficult to find the cause of the problem. Checking the following points is useful to identify the problem area.

[1] Filter check and drain oil check
Check the filter element. Check if a considerable amount of contamination is found.
It is normal that a little amount of metal dust originated from abrasion of the shoe or cylinders is seen. However, if the amount of metal dust is extremely high in the filter, the shoe might be damaged. Check drain oil of inside the pump casing, as well.

[2] Abnormal noise / abnormal vibration
Check for abnormal noise or abnormal vibration in the main pump. Examine if the sound repeats with regular frequency such as, a hunching sound in the regulator or hunching sound of the valve relief.
If there is an abnormal vibration or sound, cavitation or damage inside the pump should be considered.

[3] When using two pumps.
If piping uses two single pumps or two motors, change the pipe of each pump.
By changing the pipe, the problem can be identified whether it is caused by a pump failure or a piping failure after the pump.

[4] Perform pressure measurement.
If the problem is related to the controlling function, examine the problem areas using pressure measurement tools instead of performing overhaul inspection.

https://truckmanualshub.com/

(3) Overload on the motor

Causes	Countermeasures	Notes
1. Rotational speed-check if pressure is set higher than expected value.	Set pressure at an expected value.	
2. Check if the torque set of the regulator is high.	Recheck the regulator.	Refer to the regulator instruction manual.
3. Damage and burning on the internal parts of the pump.	Replacement of damaged parts.	Check filter and drain oil for abnormal dust from abrasion.
4. Wrong piping for the regulator.	Correct the regulator piping.	

(4) When pump flow rate declines significantly or discharging pressure does not increase.

Causes	Countermeasures	Notes
1. Faulty regulator.	Repair the regulator.	Refer to the regulator instruction manual.
2. Damage and burning on the internal parts of the pump.	Replacement of damaged parts.	Check filter and drain oil.
3. Attached faulty pump.	Replace damaged parts.	Disconnect the attached pump and check the shaft coupling section.
4. Attached faulty valve.	Check attached valve. (Check especially poppets and seat springs.)	Refer to the attached valve instruction manual.
5. Wrong regulator piping.	Correct the regulator piping.	

(5) Abnormal noise / abnormal vibration

Causes	Countermeasures	Notes
1. Cavitation	Prevention of cavitation. Check hydraulic oil for white turbidness.	• Boost pressure is too low. • Failure of auxiliary pump. • Air is drawn from the intake pipe. • Intake resistance is too high.
2. Damage on the shoe caulking area.	Replacement of piston shoe, shoe plate or others.	
3. Cracks on the cylinder	Replacement of the cylinder	
4. Failure of pump installation	Reinstallation	
5. Hunching of the regulator	Repair of the regulator	Refer to the regulator instruction manual.
6. Hunching of the relief valve on the attached valve	Repair the attached valve.	Refer to the attached valve instruction manual.

4. Attached Diagram and Chart

Hydraulic Pump

(1) Exploded View of Pump

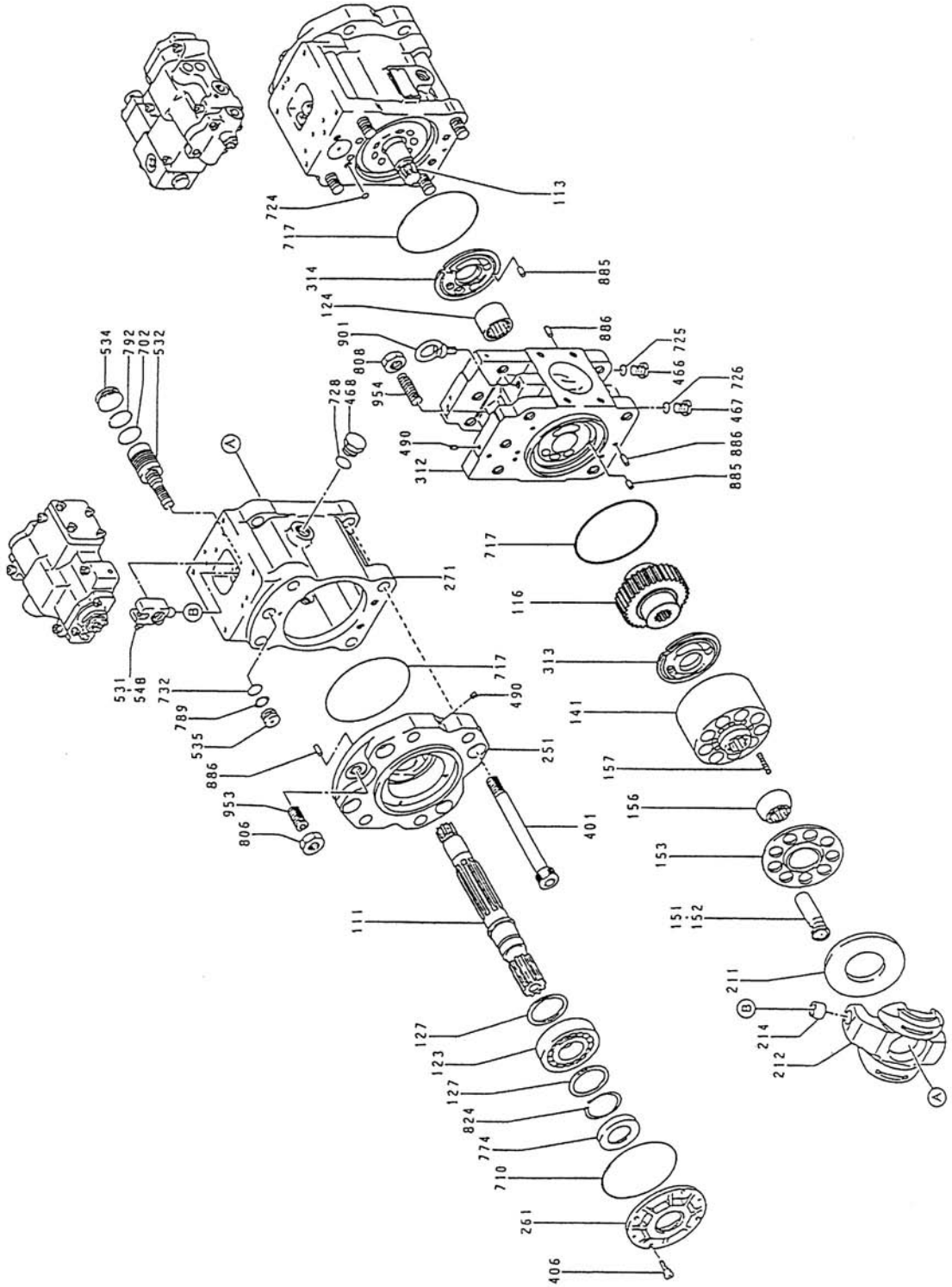

https://truckmanualshub.com/

Hydraulic Pump

Cross Sectional View of Pump

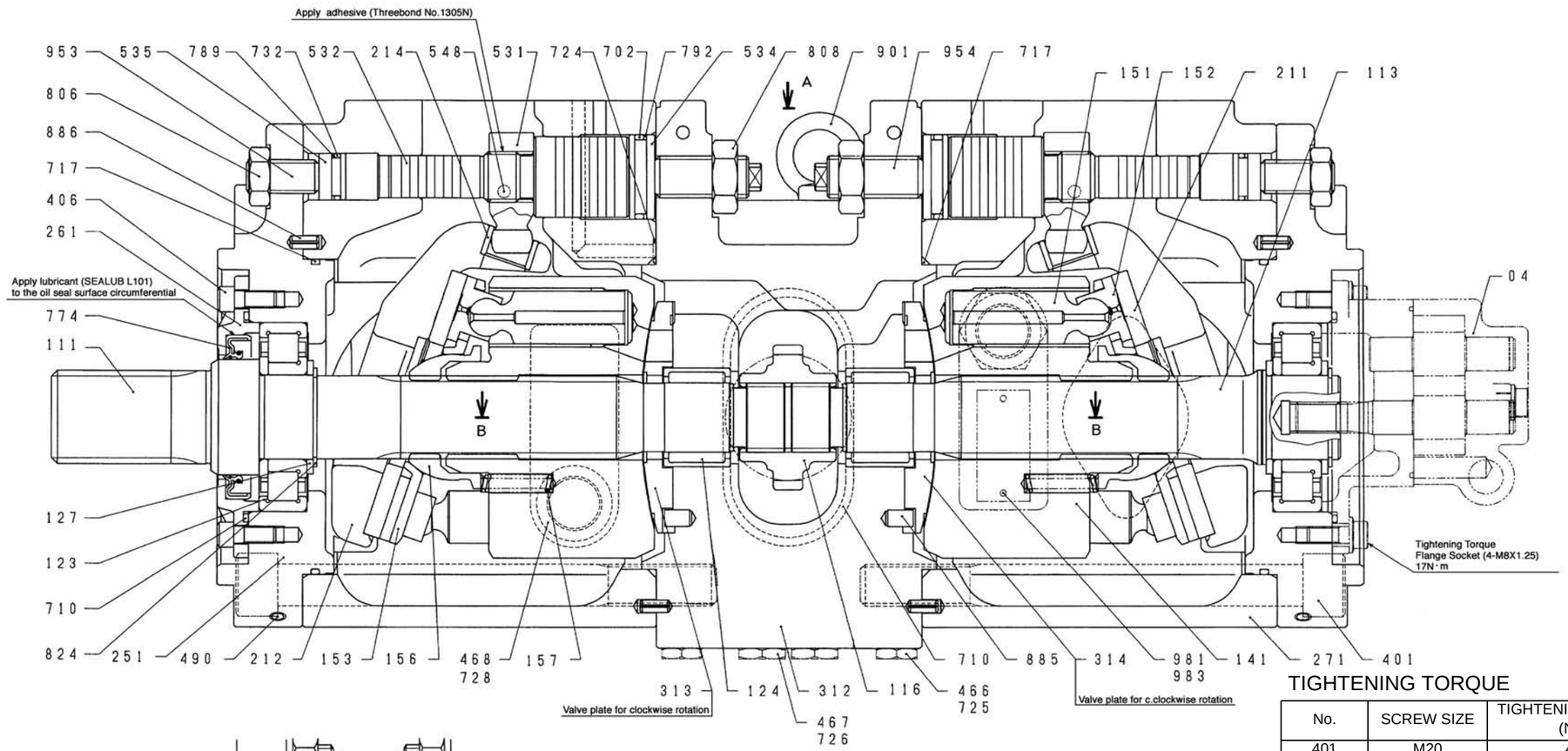

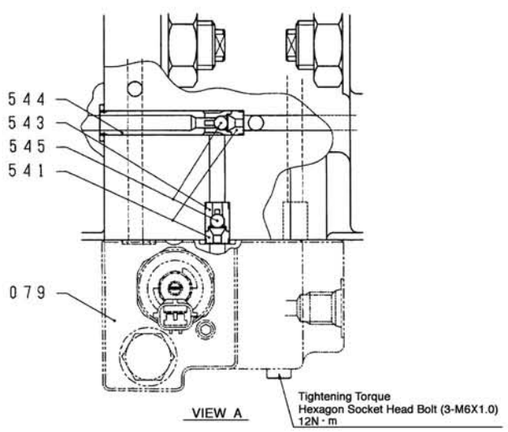

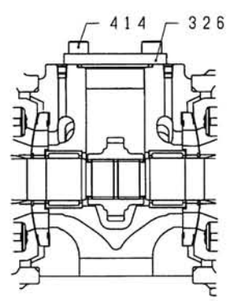

TIGHTENING TORQUE

No.	SCREW SIZE	TIGHTENING TORQUE (N•m)
401	M20	430
406	M8	29
414	M10	57
466	G1/4	36
467	G3/8	74
468	G3/4	170
490	NPTF1/16	8.8
531, 532	M24¥2	240
806	M16	130
808	M20	240

No.	PART NAME	QTY	COUNSTITUENT PART (QTY)
04	GEAR PUMP	1set	ZX15LGRZ2
011	PISTON ASSY	2set	151 (9PC), 152 (9PC)
013	CYLINDER (R) ASSY	1set	141 (1PC), 313 (1PC)
014	CYLINDER (L) ASSY	2set	141 (1PC), 314 (1PC)
030	SWASH PLATE ASSY	2set	212 (1PC), 214 (1PC)
041	CHECK VALVE 1 ASSY	2set	541 (1PC), 543 (1PC), 545 (1PC)
042	CHECK VALVE 2 ASSY	2set	541 (1PC), 544 (1PC), 545 (1PC)
079	PROPORTINAL REDUCING VALVE ASSY	1set	KDRDE5KR-V3-V
530	TILTING PIN ASSY	2set	531 (1PC), 548 (1PC)

No.	PART NAME	QTY
111	DRIVE SHAFT (F)	1
113	DRIVE SHAFT (R)	1
116	GEAR 1ST	1
123	ROLLER BEARING	2
124	NEEDLE BEARING	2
127	BEARING SPACER	3
141	CYLINDER BLOCK	2
151	PISTON	18
152	SHOE	18
153	RETAINER	2
156	SPHARICAL BUSH	2
157	CYLINDER SPRING	18
211	SHOE PLATE	2
212	SWASH PLATE	2
214	TILTING BUSH	2
251	SWASH PLATE SUPPORT	2
261	SEAL COVER (F)	1
271	PUMP CASING	2
312	VALVE BLOCK	1
313	VALVE PLATE (R)	1
314	VALVE PLATE (L)	1
326	COVER	1
401	HEX SOCKET HEAD BOLT	8
406	HEX SOCKET HEAD BOLT	4
414	HEX SOCKET HEAD BOLT	4
466	PLUG	2
467	PLUG	2
468	PLUG	4
490	PLUG	32
531	TILTING PIN	2
532	SERVO PISTON	2
534	STOPPER (L)	2
535	STOPPER (S)	2
541	SEAT	4
543	STOPPER 1	2
544	STOPPER 2	2
545	STEAL BALL	4
548	FEED BACK PIN	2
702	O-RING	2
710	O-RING	2
717	O-RING	4
724	O-RING	16
725	O-RING	4
726	O-RING	2
728	O-RING	4
732	O-RING	2
774	OIL SEAL	1
789	BACKUP RING	2
792	BACKUP RING	2
806	NUT	2
808	NUT	2
824	STOP RING	2
885	VALVE PLATE PIN	2
886	SPRING PIN	4
901	EYE BOLT	2
953	SET SCREW	2
954	SET SCREW	2
981	NAME PLATE	1
983	PIN	2

https://truckmanualshub.com/

Gear Pump Handling

1. Structure and Function

(1) Structure

Casing is consists of the front case (361) and the gear case (351), and includes a pair of drive gear (353), a pair of Idle gear (354) and relief valve which sets up the discharging oil pressure, The relief valve is consists of the filter (355), poppet (307), seat (308), spring (310), ring (309), adjusting screw (311) and lock nut (312). For avoiding the oil leak to the outside, the front case is equipped with the square ring (700) and the O-ring (710).

(2) Function

Inhaled oil from the suction port B_3 is discharged by the drive gear and the Idle gear from the discharge port A_3. The relief valve keeps pressure of the discharging oil 3.9MPa. Surplus discharging oil is discharged from the tank port through the relief valve.

https://truckmanualshub.com/

2. Assembly drawing

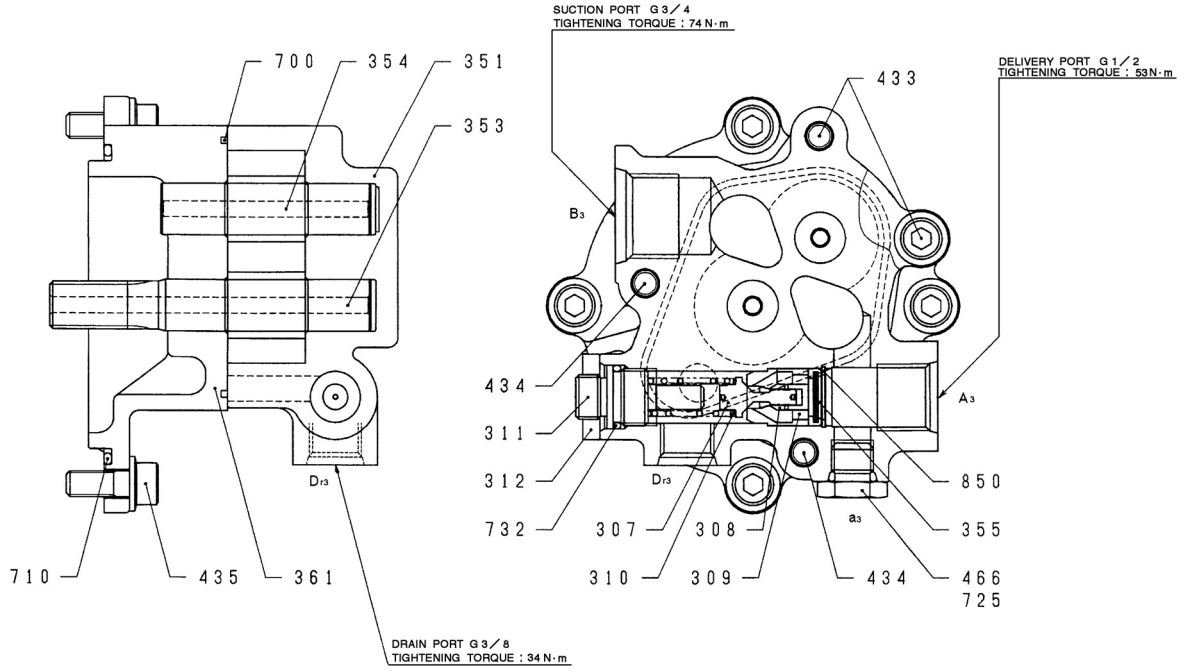

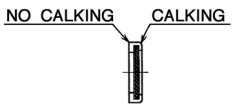

NOTES

1. After assembling check that the drive gear turns smoothly. (TORQUE:BELOW 0.1N·m)
2. When assembling, pour enough oil on the sliding surfaces.
3. The filter must be assembled with its non caked surface firmly contacting with the bottom surface of the recess.

TIGHTENING TORQUE

NO.	SCREW SIZE	TIGHTENING TORQUE N・m
312	M14 × 1.5	29
433, 434	M8	17
435		
466	G1/4	16

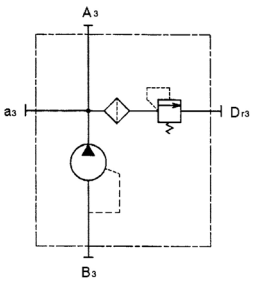

NO.	PART NAME	QTY	NO.	PART NAME	QTY
307	POPPET	1	433	FLANGE SOCKET	2
308	SEAT	1	434	FLANGE SOCKET	2
309	RING	1	435	FLANGE SOCKET	4
310	SPRING	1	466	VP PLUG	1
311	ADJUSTING SCREW	1	700	SQUARE RING	1
312	LOCK NUT	1	710	O-RING	1
351	GEAR CASE	1	725	O-RING	1
353	DRIVE GEAR	1	732	O-RING	1
354	IDLE GEAR	1	850	LOCKING RING	1
355	FILTER	1			
361	FRONT CASE	1			

https://truckmanualshub.com/

Regulator Handling

1. Description

The regulator KR 3*-9N** for KAWASAKI incline type axial piston pump K3V Series use is composed of the following control mechanism.

[1] Power control

As the discharge pressure P_1 at the self pump and discharge pressure P_2 at the counterpart pump rise, restrain the input torque to a constant value or less by reducing the pump incline rotation angle (discharge flow) automatically (when the number of revolutions is constant, the input power is kept constant).

It is operated by the load pressures(1.33 x Self pump load pressure + 0.67 x Counterpart pump load pressure) at the two pumps of the tandem type double pumps.

The overload of the self pump is prevented by adopting the mechanism that raises the sensitivity of the self pump load pressure for the counterpart pump load pressure.

Moreover, the overload of the motor is automatically prevented with this mechanism irrespective of the load of two pumps.

[2] Power shift control

Set power values can be shifted by changing command current values for the electromagnetic proportional pressure-reducing valve that is attached to the regulator.

There is only one electromagnetic proportional pressure-reducing valve but the secondary pressure Pf (power shift pressure) is introduced into the power control section in the regulator of each pump through the passage inside the pump. Each pressure is shifted into the same set power value. As the pump's output power can be changed to an arbitrary value through this mechanism, it is possible to obtain optimal power according to the work condition.

[3] Flow control

By changing pilot pressure Pi, the pump incline rotation angle (discharge flow) can be arbitrarily controlled.

This regulator adopts a negative flow control (negative control) method where the discharge flow Q decreases as the pilot pressure Pi increases. Through this mechanism, a pilot pressure matching the flow required for the work is instructed, the pump discharges only the required flow, thus no useless power is consumed.

This regulator has those three control mechanisms above described, but each control works in a combined way. The priority is given to the low incline rotation (low flow) command by mechanical computing which is to be described later.

https://truckmanualshub.com/

2. Description of Operation

(1) Flow control

As shown in the figure on the right, the pump discharge flow is controlled arbitrarily by pilot pressure Pi.

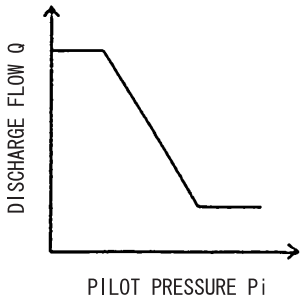

1) Flow decrease operation

When pilot pressure Pi rises, pilot piston (643) moves to the right and stops at a position where the force of pilot spring (646) and the oil pressure force are balanced. As Pin (876) fixed on lever 2 (613) is fitted in the grooved section [Section A] made on the pilot piston, when the pilot piston moves, lever 2 turns around the fixation point as a fulcrum due to the function of fulcrum plug (614) and pin (875). As pin (897) fixed on feedback lever (611) is projected into the larger hole section on lever 2 [Section C], pin (897) moves to the right as lever 2 rotates. The part formed with two surfaces [Section D] on the feedback lever has the pin (548) fixed onto incline rotation pin (531) which oscillates the swash plate, the feedback lever rotates with Section D as its fulcrum when pin (897) moves. As the feedback lever has spool (652) jointed to it via pin (874), the spool moves to the right.

When the spool moves, discharge pressure P_1 is communicated with Port Cl through the spool and is introduced into the servo piston's large diameter part. The discharge pressure P_1 is always introduced into the servo piston's small diameter part but the servo piston moves to the right because of the differential area, and the incline rotation angle is reduced.

When the servo piston moves to the right, Point D also moves to the right. As the spool has a return spring (654) fitted and the spring force to pull to the left always acts on the spool, pin (897) is pushed against the larger hole section [Section C] on the lever 2. Therefore, the feedback lever turns around Point C as its fulcrum as Point D moves, and the spool moves to the left.

In junction with this movement, the opening between the sleeve (651) and spool (652) starts closing gradually and the servo piston stops at the position where the opening has completely closed.

2) Flow increase operation

When pilot pressure Pi decreases, pilot piston (643) moves to the left by the force of pilot spring (646) and lever 2 (613) turns around Point B as its fulcrum. As pin (897) is pushed against the larger hole section [Section C] on lever 2 by return spring (654) via spool (652), pin (874) and feedback lever (611), the feedback lever turns around Point D as its fulcrum as the lever 2 rotates and the spool moves to the left.

As Port Cl is opened to the tank port when the spool moves, the pressure in the large diameter part is released and the servo piston moves to the left by action of discharge pressure P_1 in the small diameter section. As a result, the flow increases.

As the servo piston moves, Point D moves to the left, the feedback lever turns around Point C as its fulcrum, and the spool moves to the right. The spool continues to move until the spool sleeve opening is closed. It stops at the position where the opening has been closed.

https://truckmanualshub.com/

(2) Power control

As shown in the figure on the right , the overload of the motor and the overload of the self pump are prevented by reducing the pump incline rotation angle when the load pressure rises.
As this regulator adopts the method to assume the oil pressure power of the sum of the 1.33 times the self pump pressure power and 0.67 times the counterpart pump pressure to be a signal and to control the horsepower.

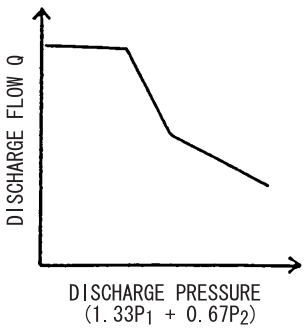

(The area of Compensation piston
Self pump pressure part : Counterpart pump pressure part = 2 : 1)

1) Overload preventive operation

When the discharge pressure P_1 at the self pump or the discharge pressure P_2 at the counterpart pump rises as P_1 and P_2 act on the stepped section of compensation piston (621), compensation rod (623) is pushed to the right and moves to the position where the forces of the outer spring (625) and inner spring (626) are balanced with the hydraulic oil force. The motion of the compensation rod is transferred to lever 1 via pin (875) and lever 1 turns around the center of pin (876) (Point E) fixed on casing (601). As pin (897) fixed on feedback lever (611) is projected into the larger hole section on the lever 1 [Section F], the feedback lever turns around Point D as its fulcrum and spool (652) moves to the right as the lever 1 rotates.
When the spool moves, discharge pressure P_1 is introduced into the servo piston's larger diameter part via Port CI. As a result, the servo piston moves to the right, the pump discharge flow is reduced and overload on the motor is prevented.
The motion of the servo piston is transferred to the feedback lever via Point D, the feedback lever turns around Point F as its fulcrum, and the spool moves to the left. The spool moves until the opening between the spool and sleeve (651) is closed. It stops at the position where the opening has been just closed.

2) Flow return operation

When the discharge pressure P_1 at the self pump or the discharge pressure P_2 at the counterpart pump falls, compensation rod (623) is pushed back by the force of springs (625 and 626) and lever 1 turns around Point E. The feedback lever turns around Point D as its fulcrum as lever 1 rotates, and the spool moves to the left. Therefore, Port CI is opened to the tank port, the pressure in the large diameter part of the servo piston is released and the servo piston moves to the left, as a result, the pump discharge flow increases.
The motion of the servo piston is transferred to the spool through the feedback mechanism, and the mechanism continues to operate until the opening between the spool and sleeve is closed.

https://truckmanualshub.com/

(3) Low incline rotation (low flow) command priority mechanism

As described above, an incline rotation command to the flow control or power control is transferred to the feedback lever and spool via the larger hole section [Sections C and F] on lever 1 and lever 2, but only the lever which makes the incline rotation smaller can contact pin (897). On the other hand, the hole (dia. 8) on the side under the command of larger incline rotation is not in contact with pin (897) and in a free state because Sections C and F have a structure where pin (dia. 4) is projected into the large holes (dia. 8). Through this mechanical selection method, priority is given to a command which belongs to the low incline rotation side at the flow control and power control.

(4) Power shift control

As shown in the figure on the right, pump's set power is controlled arbitrarily by power shift pressure Pf. When power shift pressure Pf increases, since compensation rod (623) moves to the right via pin (898) and compensation piston (621), the pump inline rotation angle decreases and set power increases as described in Overload preventive operation in Power control. On the contrary, as power shift pressure Pf decreases, the set power increases.

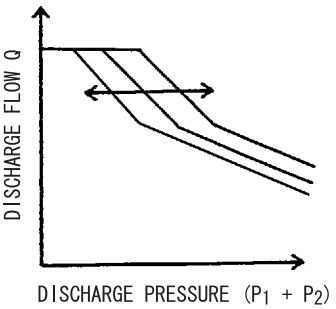

3. Adjusting the Regulator

The maximum flow, minimum flow, power controlling characteristics and flow controlling characteristics can be adjusted by using adjusting screws on this regulator.
(Each adjustment is shown in Attached List 1.)

(1) Adjusting maximum flow

Loosen hexagon nut (808), and fasten (or loosen) set screw (954) to do adjustment. The maximum flow, but not other controlling characteristics will change.

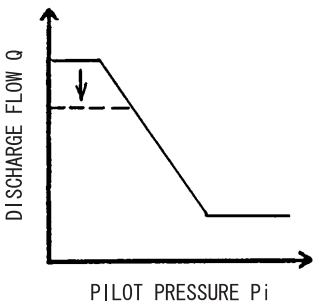

(2) Adjusting minimum flow

Loosen hexagon nut (808), and fasten (or loosen) hexagonal socket set screw (953) to do adjustment. As with adjusting maximum flow, other controlling characteristics do not change but if it is fastened too far, required power may increase at the time of maximum discharge pressure (at the time of relief). This needs special attention.

(3) Adjusting input power

As this is a simultaneous total power mechanism, when changing set power, do the same amount of adjustment by using the adjusting screws on both front and rear pumps. Changes in pressure by adjustment are valves where pressures of two pumps increase at the same time.

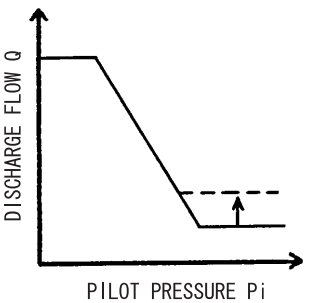

https://truckmanualshub.com/

1) Adjusting outer spring

Loosen hexagon nut (630), and fasten (or loosen) adjusting screw C (628) to do adjustment. If the adjusting screw is fastened, the input power moves to the right as shown in the figure on the right and the input power increases. If the adjusting screw C is rotated by N turns, the setting on the inner spring changes. Once rotate back adjusting ring C (627) by N x A turns in the reverse direction.

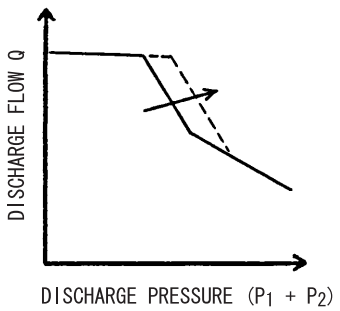

2) Adjusting inner spring

Loosen hexagon nut (802), and fasten (or loosen) adjusting ring C (627) to do adjustment. If the adjusting screw is fastened, the flow increases as shown in the figure on the right and the input power increases.

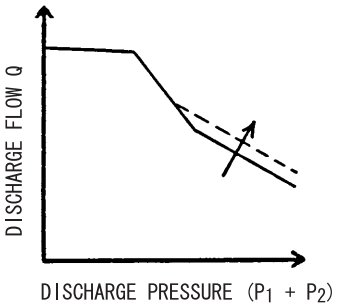

(4) Adjusting flow controlling characteristics

Loosen hexagon nut (801), and fasten (or loosen) hexagonal socket set screw (924) to do adjustment. If the adjusting screw is fastened, the control line moves to the right as shown in the figure on the right.

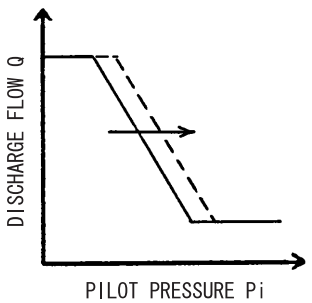

https://truckmanualshub.com/

4. Troubleshooting

If malfunctions possibly caused by regulator occurs, disassemble and reassemble it referring to the maintenance instructions.

(1) Motor Overloading

Apply a load onto each pump separately and find out which pump (front or rear) is abnormal? If both are abnormal, first check the following (1) and (2):
If only one side is available, start from (3).

[1] Check that the power shift command current value is normal.

[2] Lower power shift pressure.
- Check for dither on the amplifier
- Replace electromagnetic proportional pressure-reducing valves

[3] Compensation piston/compensation rod sticking
- Disassemble and clean

[4] Pin (898) sticking
- Disassemble and clean

(2) Maximum flow is not available

[1] Ensure that pilot pressure Pi is normal.

[2] Pilot piston sticking
- Disassemble and clean

[3] Spool sticking
- Disassemble and clean

Note: If the parts have deep scratches, replace the parts.

https://truckmanualshub.com/

5. Attachements

(1) List of adjustments for regulator

Regulator type:			KR3S-9N0A
Revolution (min^{-1})			2,030
Adjusting Maximum Flow		Adjusting screw (954) Fastening (turns)	+1/4
		Changes in flow (L/min.)	6.3
Adjusting Minimum Flow		Adjusting screw (953) Fastening (turns)	+1/4
		Changes in flow (L/min.)	5.1
Adjusting Input Power	Adjusting outer spring	Adjusting screw (628) Fastening (turns)	+1/4
		Changes in compensation control start pressure (MPa)	1.75
		Changes in input torque (N・m)	71.6
		A	1.9
	Adjusting inner spring	Adjusting ring (627) Fastening (turns)	+1/4
		Changes in flow (L/min.)	12.1
		Changes in input torque (N・m)	63.7
		Set screw (924) Fastening (turns)	+1/4
Adjusting Flow Controlling Characteristics		Changes in flow control start pressure (MPa)	0.15
		Changes in flow (L/min.)	16.4

https://truckmanualshub.com/

(2) Explanatory diagram of regulator operation

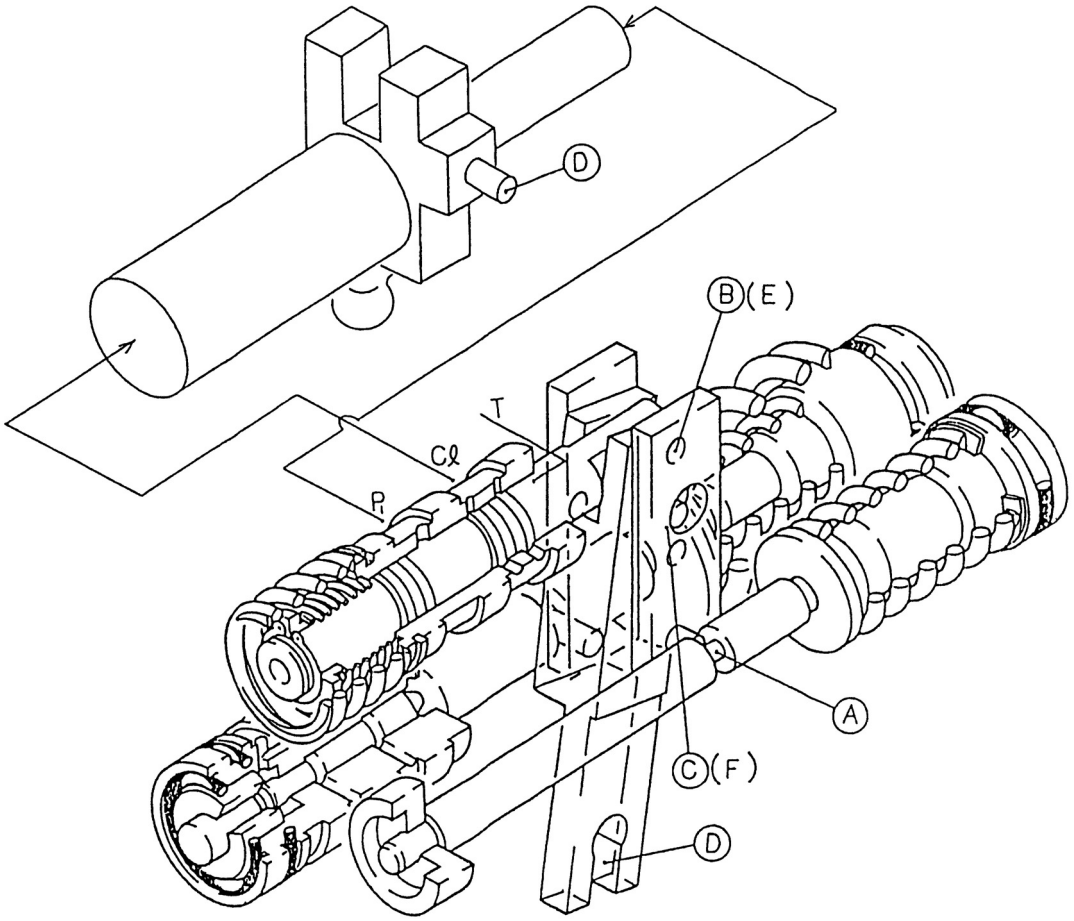

(3) Exploded View of Regulator

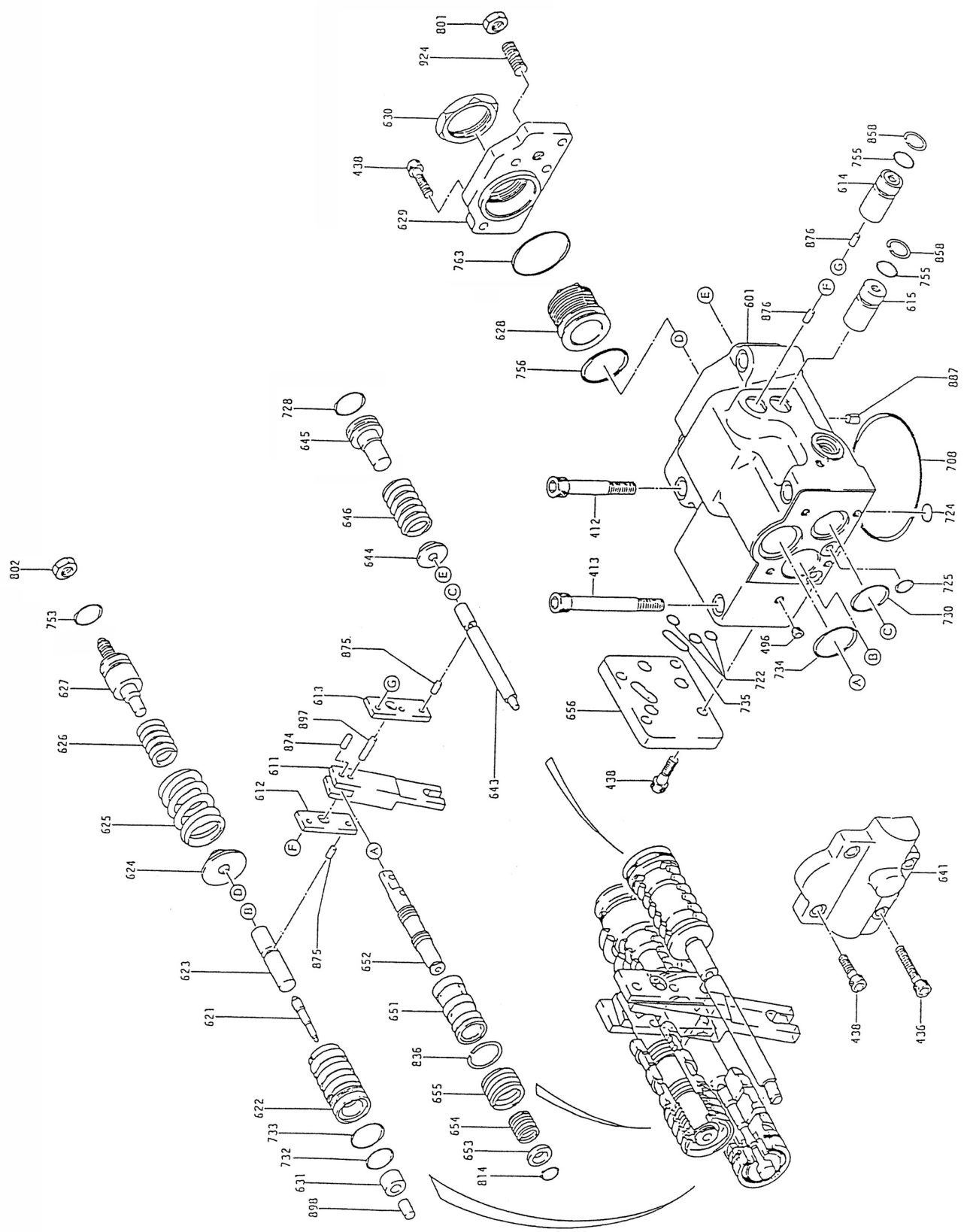

https://truckmanualshub.com/

Regulator Maintenance

1. Disassembling Precautions

[1] This regulator is composed of small precision components. Disassembling and reassembling it involves complicated procedures. We therefore recommend that you replace the entire regulator assembly. However, if you must proceed and disassemble the regulator, thoroughly read the instructions before you do so.

[2] Numbers in parentheses following the part names indicate symbols in the structural drawings.

2. Tools

Tool Name	Tool Size
Hexagon bar wrench	4, 5, 6 (size B, mm)
Socket wrench, double- (single-) ended wrench	
Adjustable wrench	Small size (maximum 36 mm)
Screw driver	
Plastic hammer	
Torque wrench	
Pliers	For stop rings, two
Steel bar	Diameter 4 or less Length = 100
Tweezers	
Bolt	M4, length = approx. 50

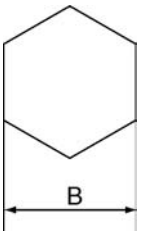

3. Disassembling Instructions

	Procedures	Precautions
1	Pick a work area for disassembling the regulator.	1. Choose a clean area. 2. Place a rubber sheet or cloth on the workbench so parts do not become scratched.
2	Remove debris or rust from the surface of regulator with a solvent.	

https://truckmanualshub.com/

	Procedures	Precautions
3	Remove hexagon socket head bolts (412 and 413), and remove the regulator body from the pump body. 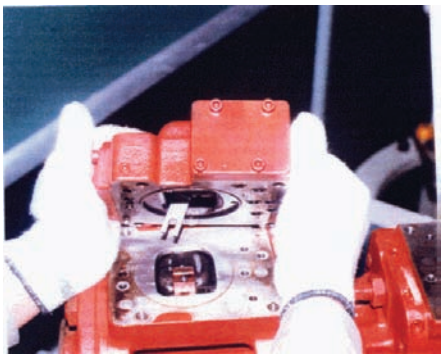	Do not lose the O-rings.
4	Remove hexagon socket head bolts (438) to remove cover (C) (629). 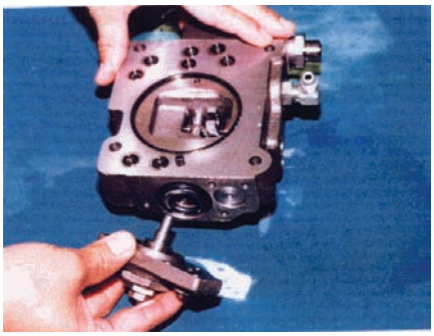	Adjusting screw (C) (628), adjustings ring (C) (627), lock nut (630), hexagon nuts (801, 802), and adjusting screw (924) are fitted on the cover (C). Do not loosen those screws and nuts. If loosened, the pressure and flow settings will be altered.
5	After removing cover (C) (629) subassembly, remove outer spring (625), inner spring (626) and spring seat (C) (624) from the compensating section. Also, pull out adjusting ring (Q) (645), pilot spring (646) and spring seat (644) from the pilot section. 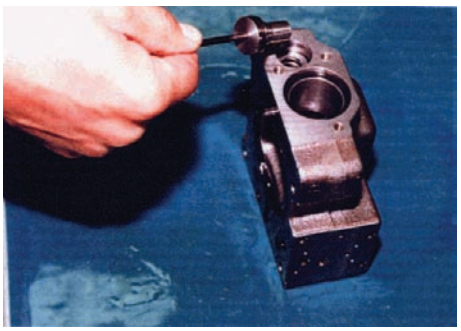	Adjusting ring (Q) (645) comes out easily when you use an M4 bolt to pull it out.

https://truckmanualshub.com/

	Procedures	Precautions
6	Remove hexagon socket head bolts (436 and 438) and remove pilot cover (641). After you remove the pilot cover, remove set spring (655) from the pilot section. 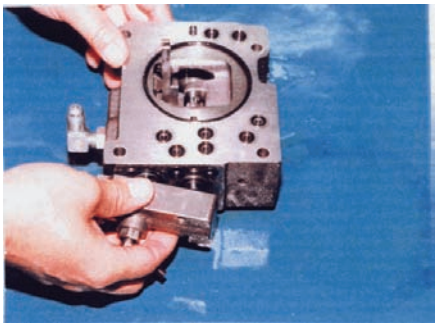	
7	Remove stop ring (814) to remove spring seat (653), return spring (654), and sleeve (651). 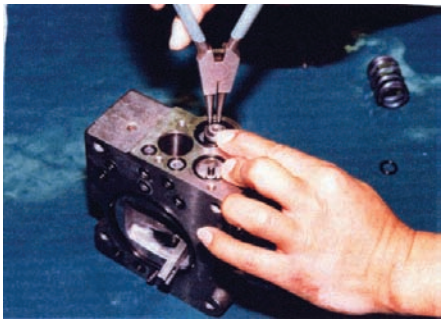	1. A snap ring (836) is fitted onto the sleeve (651). 2. Return spring (654) will pop out while removing stop ring (814); do not lose it.
8	Remove locking ring (858), and remove support plug (614) and adjusting plug (615). 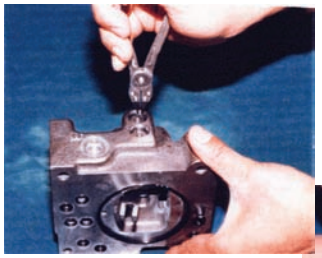 	Support plug (614) and adjusting plug (615) can be easily pulled out if you use an M6 bolt.

https://truckmanualshub.com/

	Procedures	Precautions
9	Remove lever 2 (613). Leave pin (875) in.	Tweezers will facilitate the process.
10	Pull out pin (874) and remove feedback lever (611). 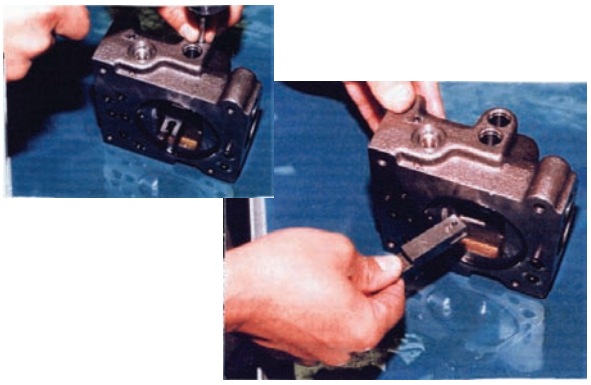	Push out pin (874) (pin dia. 4) from top with a fine steel rod. Avoid hitting lever (1) (612) during this process.
11	Remove lever (1) (612). Leave pin (875) in.	
12	Pull out pilot piston (643) and spool (652).	
13	Pull out piston case (622), compensating piston (621), and compensating rod (623). Now the regulator is completely disassembled.	Piston case (622) can be removed by pushing out the compensating rod (623) from the opposite side of the piston case.

Note: The components are small. Be very careful not to lose them.

4. Reassembling Instructions

Note: Although you can reverse the disassembling procedures to reassemble the regulator, here are some precautions you should keep in mind.

[1] If a part gets damaged during disassembling, replace it or make all necessary repairs. Keep your shelves stocked with replacement parts.

[2] The mixture of foreign substances can cause malfunctions. Clean parts thoroughly with cleaning solvents, air dry them, and pick a clean area for work.

[3] All bolts and plugs are to be tightened to the specified tightening torque.

[4] Always apply clean hydraulic oil to the sliding parts before assembling them.

[5] As a rule, replace seals such as O-rings.

https://truckmanualshub.com/

	Procedures	Precautions
1	Install compensating rod (623) into the compensating hole on the casing (601).	
2	The pin that is press-fitted onto the lever 1 (612) is to be inserted in the compensating groove. After you insert the pin, install lever 1 onto the pin that is press-fitted onto the casing.	
3	Install spool (652) and sleeve (651) into the spool hole on the casing.	1. Ensure that the spool and sleeve slides smoothly in casing without engagement. 2. The spool must be oriented properly. 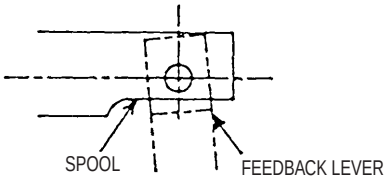
4	Install feedback lever (611), align the pinholes on the feedback lever, and insert pin (874).	1. You can facilitate the process by slightly inserting the pin into the feedback lever beforehand. 2. The feedback lever must be facing the right direction. 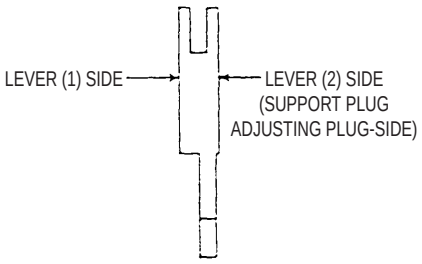
5	Install pilot piston (643) into the negative control hole on casing.	Ensure that the pilot piston slides smoothly without engagement.
6	The pin that is press-fitted onto lever 2 (613) is to be inserted in the groove on pilot piston. Insert the pin and install lever 2. 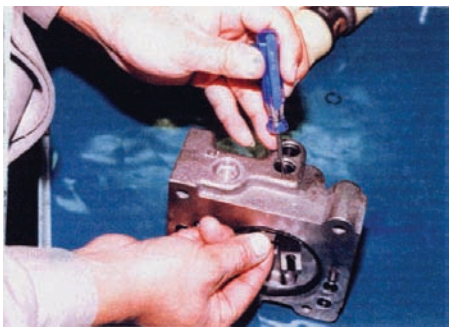	

https://truckmanualshub.com/

	Procedures	Precautions
7	The pin that is press-fitted into support plug (614) goes into the pin hole on lever 2. Install the support plug (614) in this manner, and install locking ring (858). 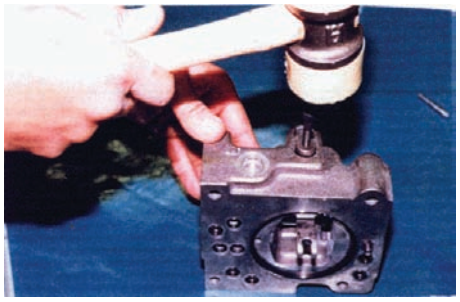	
8	Insert adjusting plug (615) and install the locking ring.	1. Ensure that you placed the support plug and the adjusting plug in the respective holes. 2. At this point, move the feedback lever to see it is not loose and there is no engagement.
9	Install return spring (654) and spring seat (653) into the spool hole, and install stop ring (814). 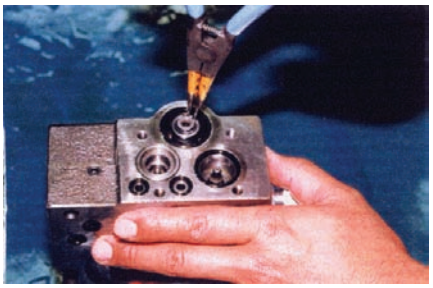	
10	Install set spring (655) into the spool hole, install compensating piston (621) and piston case (622) into the compensating hole, fit pilot cover (641), and fasten hexagon socket head bolts (436). 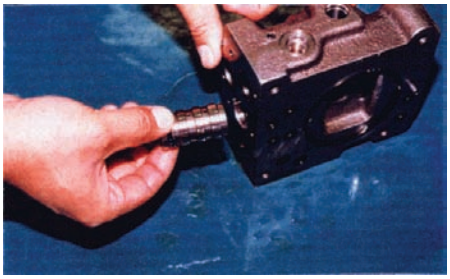	

https://truckmanualshub.com/

	Procedures	Precautions
11	Install spring seat (644), pilot ring (646), adjusting ring (Q) (645) into the pilot hole, then fit spring seat (624), inner spring (626), outer spring (625) into compensating hole. 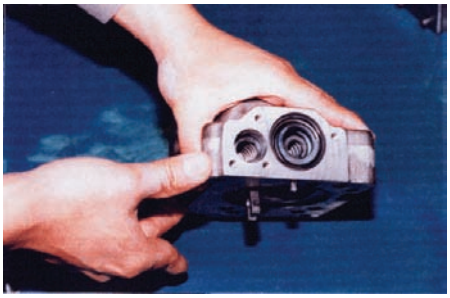	The spring seat must face the right direction.
12	Install cover (C) (629), into which you have already set adjusting screw (628), adjusting ring (C) (627), lock nut (630), hexagon nuts (801, 802), and set screw (924). Then fasten hexagon socket head bolts (438) to complete the assembly. 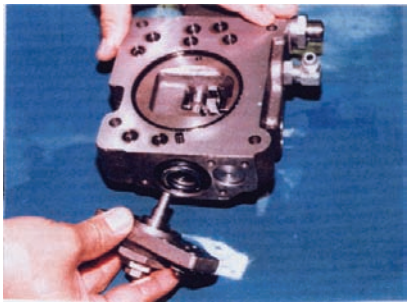	

https://truckmanualshub.com/

5. Cross-sectional view of regulator

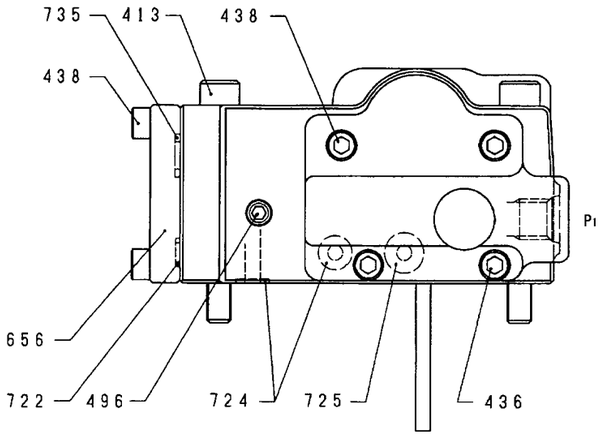

VIEW C

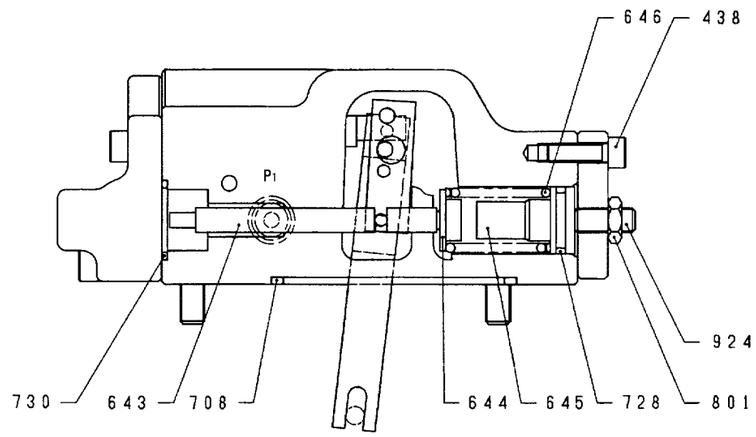

SECTION B - B

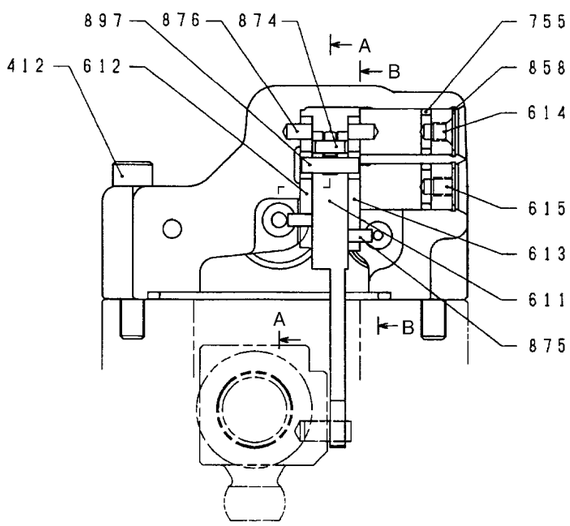

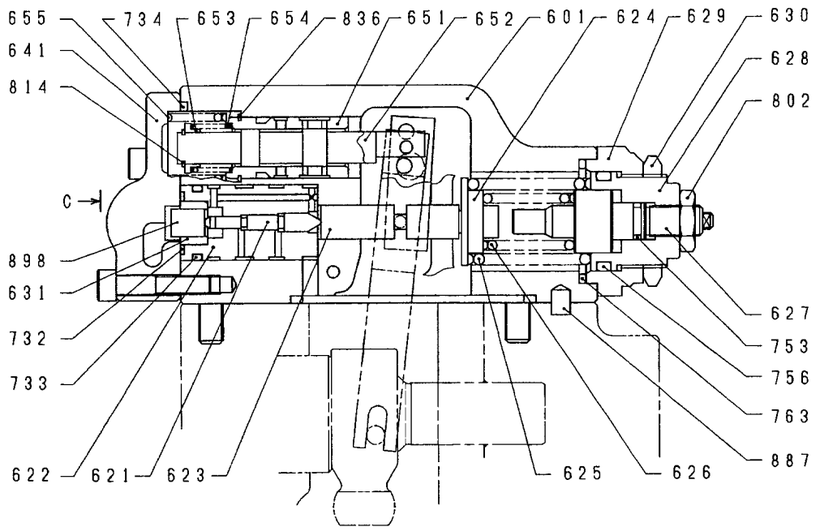

SECTION A - A

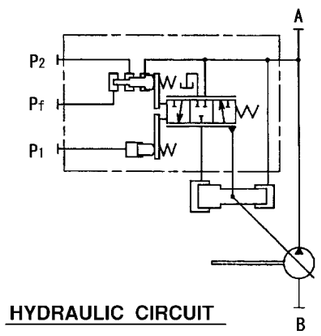

HYDRAULIC CIRCUIT

TIGHTENING TORQUE

No.	SCREW SIZE	TIGHTENING TORQUE (N・m)
412, 413	M8	29
436, 438	M6	12
496	NPTF1/16	8.8
630	M30 x 1.5	160
801	M8	16
802	M10	19

No	PART NAME	QTY
924	SET SCREW	1
898	PIN	1
897	PIN	1
887	PIN	1
876	PIN	2
875	PIN	2
874	PIN	1
858	LOCKING RING	2
836	SNAP RING	1
814	STOP RING	1
802	NUT	1
801	NUT	1
763	O-RING	1
756	O-RING	1
755	O-RING	2
753	O-RING	2
735	O-RING	1
734	O-RING	1
733	O-RING	1
732	O-RING	1
730	O-RING	1
728	O-RING	1
725	O-RING	1
724	O-RING	9
722	O-RING	3
708	O-RING	1
656	BLOCK COVER	1
655	SET SPRING	1
654	RETURN SPRING	1
653	SPRING SEAT	1
652	SPOOL	1
651	SLEEVE	1
646	PILOT SPRING	1
645	ADJUSTING RING (Q)	1
644	SPRING SEAT (Q)	1
643	PILOT PISTON	1
641	PILOT COVER	1
631	Pf SLEEVE	1
630	LOCK NUT	1
629	COVER (C)	1
628	ADJUSTING SCREW (C)	1
627	ADJUSTING RING (C)	1
626	INNER SPRING	1
625	OUTER SPRING	1
624	SPRING SEAT (C)	1
623	COMPENSATOR ROD	1
622	PISTON CASE	1
621	COMPENSATOR PISTON	1
615	ADJUSTING PLUG	1
614	CENTER PLUG	1
613	LEVER (2)	1
612	LEVER (1)	1
611	FEEDBACK LEVER	1
601	CASING	1
496	PLUG	5
438	HEX SOCKET HEAD BOLT	10
436	HEX SOCKET HEAD BOLT	2
413	HEX SOCKET HEAD BOLT	2
412	HEX SOCKET HEAD BOLT	2

https://truckmanualshub.com/

Motor

1. Structural Drawing

(1) STRUCTURE

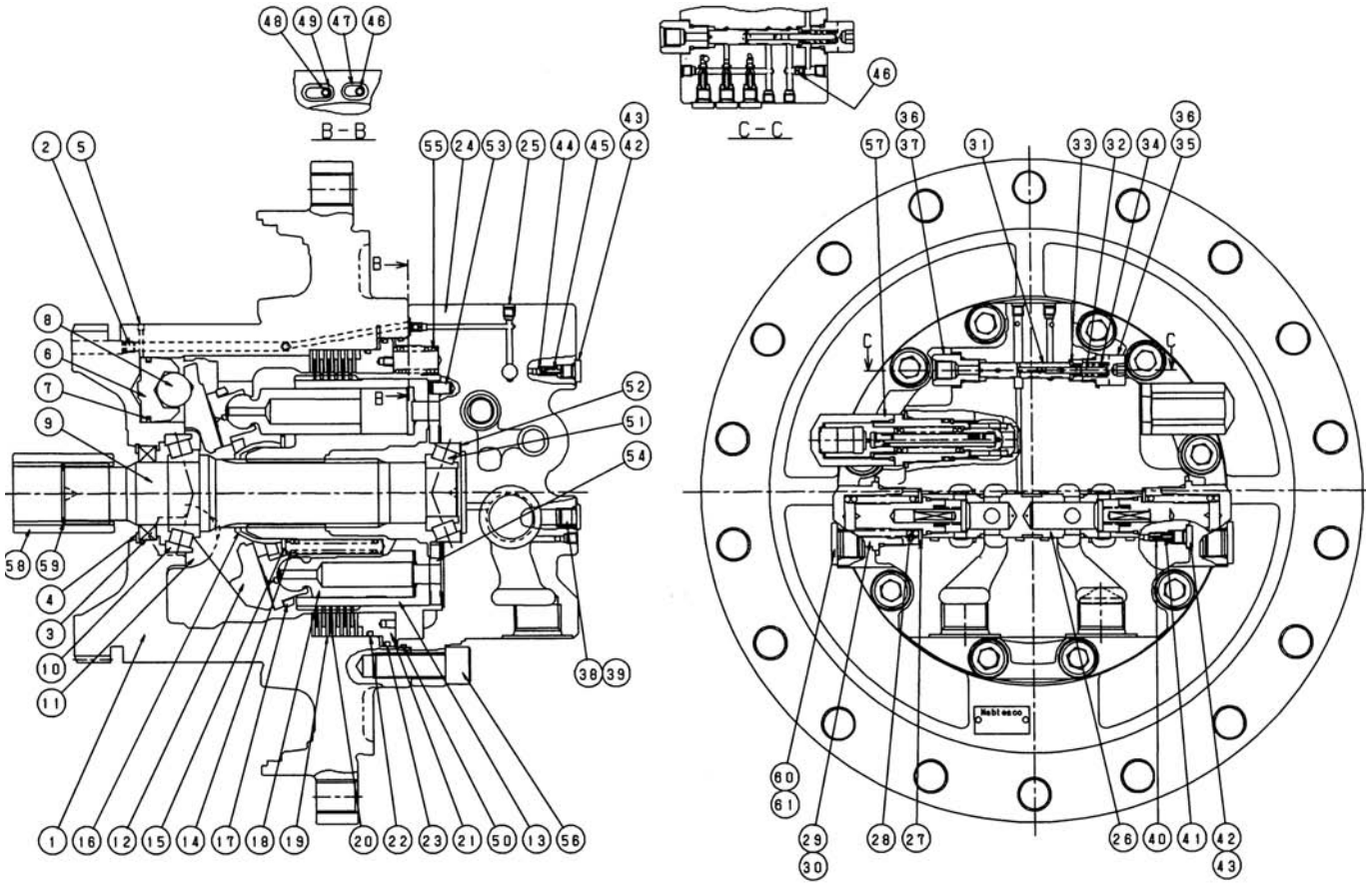

Figure 1. Structure of traveling motor

1	casing	21	brake piston	41	restrictor spring (brake valve)
2	NPT1/16 plug	22	D-ring (small dia.)	42	G1/8 Plug
3	oil seal	23	D-ring (big dia.)	43	O-ring 1B P8
4	retaining ring IRTW68	24	rear cover	44	check valve
5	expander plug MB800-040	25	NPT1/16 plug (MEC)	45	check valve spring
6	shifter piston	26	spool ass'y (M4V260RBV)	46	M6 restrictor (0.6)
7	piston seal	27	spring holder (M4V260RBV)	47	O-ring 1B P12.5
8	steel ball 25	28	spring (M4V 150RBV)	48	M6 restrictor (0.8)
9	shaft	29	M42 plug (M4V260RBV)	49	O-ring 1B P15
10	bearing HR33209J	30	O-ring 1B G40	50	O-ring 215.57 x 2.62
11	pivot	31	pilot valve spool dia. 11 (M4V290)	51	bearing HR32207C
12	swash plate	32	pin (MRC 03)	52	shim
13	cylinder block	33	spring holder (MRC03)	53	parallel pin m6 8 x 12
14	cylinder spring	34	spring (MRC03)	54	valve plate
15	spring holder	35	G3/8 pilot valve plug	55	brake spring
16	ball joint	36	O-ring 1B P14	56	HEX. socket head bolt M18 x 50
17	shoe retainer	37	connector (MRC03)	57	overload relief valve ORV-240L6S 1
18	piston ass'y	38	G1/4 Plug	58	coupling
19	separating plate	39	O-ring 1B P11	59	retaining ring C-type 40
20	friction plate	40	restrictor (brake valve)	60	G1/2 Plug
				61	O-ring 1B P18

https://truckmanualshub.com/

2. Disassembly and Assembly

(1) PREPATATION

a) Tools and jigs

DESCRIPTION	SPECIFICATION etc.
Hex. key	Width across flat 5, 6, 8, 10, 14 mm
Snap ring prier	For bore..... Dia. 32mm - 58mm, for shaft..... Dia. 60mm - 80mm
Plastic hammer	1 piece
Screw driver	Minus(-), medium size, 2 pieces
Torque wrench	For 98.1 N-m, For 324 N-m, For 441 N-m
Gear (bearing) puller	Work size : dia. 75 x width 45 can be handled (e.g. Asahi-tool GP75)
Others	Seal tape, kerosene, grease, hydraulic oil, waists, Compressed air, etc.

Table 1

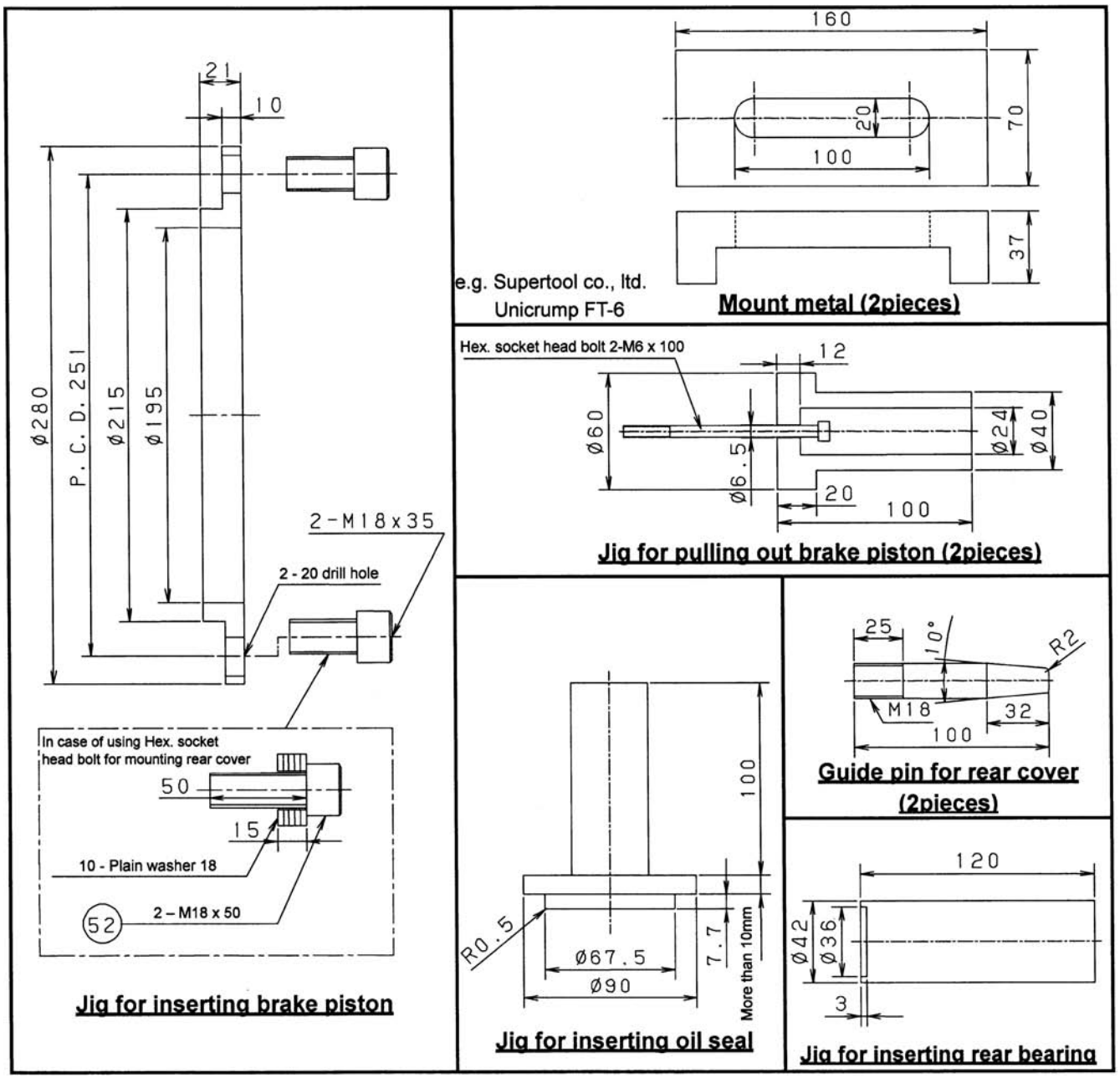

https://truckmanualshub.com/

(2) DISASSEMBLY

1) GENERAL PRECAUTIONS

Combustibles such as white kerosene are used for washing parts. These combustibles are easily ignited, and could result in fire or injury.
Be very careful when using.

Internal parts are coated with hydraulic fluid during disassembling and are slippery. If a part slips out of your hand and falls, it could result in bodily injury or could damage the part.
Be very careful when handling.

[1] Generally, hydraulic equipment is precisely manufactured and clearances between each parts are very narrow.
Therefore, disassembling and assembling works should be performed on the clean place where dusts hardly gather.
Tools and kerosene to wash parts should also be clean and handled with great care.

[2] When motor is removed from the host machine, wash around the ports sufficiently, and put the plugs so that no dust and/or water may invade.
Take off these plugs just before the piping works when re-attach it to the host machine.

[3] Before disassembling, review the sectional drawing and prepare the required parts, depending on the purpose and the range of disassembling.
Seals, O-rings, etc., if once disassembled, are not reusable.
There are some parts that should be replaced as a sub-assembly.
Consult with the parts book in advance.

[4] The piston can be inserted to whichever cylinder block for the initial assembling.
However, their combination should not be changed if they are once used. To reuse them, put the mating mark on both pistons and cylinder block before disassembling.

[5] Take great care not to pinch your hand between parts while disassembling nor let fall parts on your foot while lifting them.

https://truckmanualshub.com/

2) DISASSEMBLING INSTRUCTIONS

※ Numeral in ( ) after the part name corresponds to the number on structure drawing Fig.1 on page 1.

a) Removing accessory valves

Before disassembling motor, remove accessory valves.

※ According to disassembling purpose, select the valves to be removed.

However, you cannot disassemble the motor without removing overload relief valve (57).

⚠ There is dread of the burn, disassemble motor after cooling it to ambient temperature.

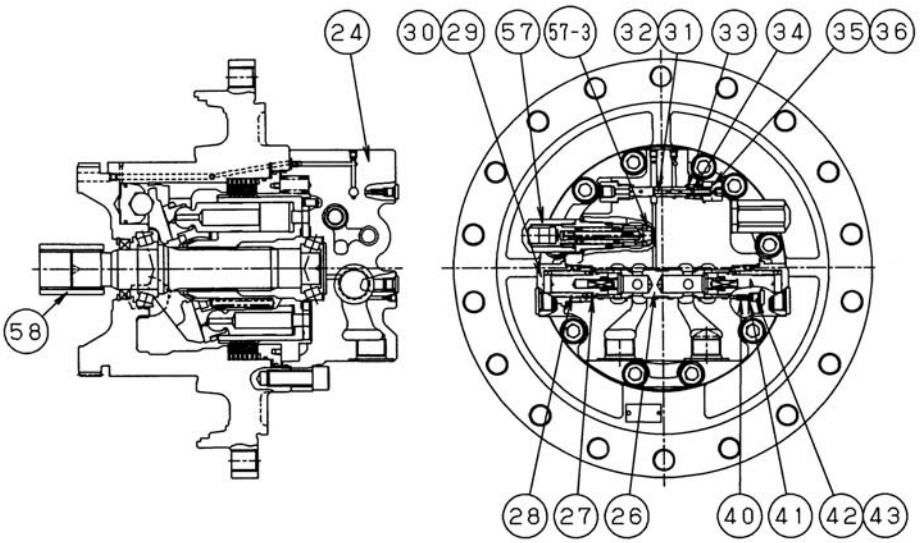

Figure 2. Removing accessory valves

[1] Remove M42 plug (29) and O-ring (30).

[2] Remove spring (28), spring holder (27) and spool ass'y (26).

※ Put the mating mark on both spool ass'y (26) and rear cover (24) so that spool ass'y (26) should not be reversed on re-assembling.

It is impossible to disassemble this spool ass'y (26) further because spool ass'y (26) is fixed by adhesive.

[3] Remove plug (42), O-ring (43), check restrictor spring (41) and restrictor (40).

[4] Remove overload relief valves (57).

※ When removing overload relief valve (57), valve seat (57-3) easily comes off, so take great care not to fall into the rear cover (24) or lose.

[5] Remove pilot valve plug (35) and then, remove O-ring (36), pilot valve spring (34), spring holder (33), pilot valve spool (31) and pin (32).

[6] Remove coupling (58).

https://truckmanualshub.com/

⚠ Take great care not to pinch your hand between parts while disassembling nor let fall parts on your foot while lifting them.

b) Disassembling motor

[1] Place the motor with the shaft horizontal, remove Hex. socket head bolts Ml8 x 50 (56) of rear cover (24) leaving two on diagonally upper and lower position.

[2] Install two guide pins diagonally into rear cover (24).
(Purpose : Prevention of falling rear cover)

[3] Loosen slowly and simultaneously the remaining two Hex. socket head bolts Ml8 x 50 (56).

[4] Remove rear cover (24) and brake springs (55) taking care cylinder block (13) is not coming out stuck with rear cover (24).

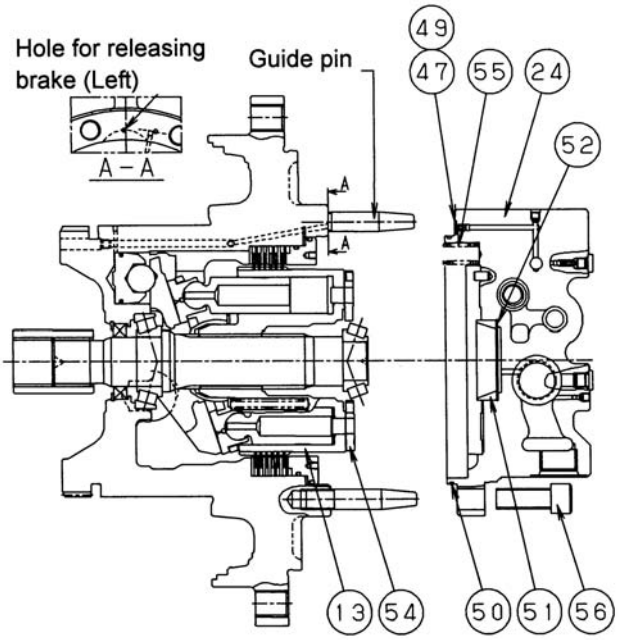

Figure 3. Removing rear cover

⚠ Take great care not to pinch your hand between parts while disassembling nor let fall parts on your foot while lifting them.

※ Do not fall, at this moment, valve plate (54), brake springs (55), outer race of rear bearing (51) and/or O-rings (50), (47), (49).

※ There are shims (52) under the outer race of rear bearing (51). Take a great care not to lose.

[5] Remove valve plate (54) without pulling out cylinder block (13).

※ Put the mating mark on both valve plate (54) and rear cover (24) so that valve plate (54) should not be reversed on re-assembling.

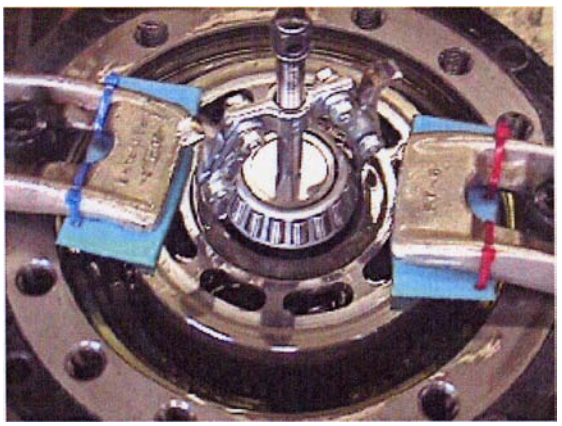

Figure 4. Removing rear bearing

[6] Using removed Hex. socket head bolts M18 x 50 (56), fasten two mount metals so as to push in cylinder block (13) without damaging it then inner race of rear bearing (51) comes out. (See Fig.4)

※ Put a rubber plate between mount metal and cylinder block (13) to protect its sliding surface.

[7] Put two fingers of gear (bearing) puller under the inner race of rear bearing (51) and remove the race.

https://truckmanualshub.com/

[8] Attaching a hand on brake piston (21), supply plant air through oil hole for releasing brake and push out the piston (21).

⚠ Be aware of brake piston (21) popping out.

※ In case of using jig for pulling out brake piston (21), install jigs to M6 thread (2 places) of brake piston (21) and pull out brake piston (21).

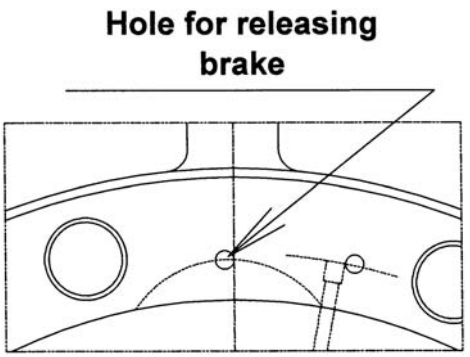

Figure 5. Enlargement figure of mating surface of casing

[9] Put as a mark on a piston ass'y (18) such as a paper pipe and put a mating mark on cylinder block (13) so that they can be re-assembled at the same position as before.

[10] Remove rotary group (cylinder block (13), spring holder (15), nine piston ass'ys (18), shoe retainer (17), ball joint (16) and cylinder spring (14)) as an assembly.

⚠ Take great care not to pinch your hand between parts while disassembling nor let fall parts on your foot while lifting them.

[11] Remove separating plates (19) and friction plates (20).

[12] Remove nine piston ass'ys (18), shoe retainer (17) and ball joint (16) from rotary group simultaneously.

[13] Remove spring holder (1 5) and cylinder springs (14).

※ Put piston ass'ys (18) into the cylinder block (13) mating the mating mark with shoe retainer (17) as if assembled.
The purpose is to put piston ass'ys (18) in the same bore of cylinder block (13) as before when reassembled.

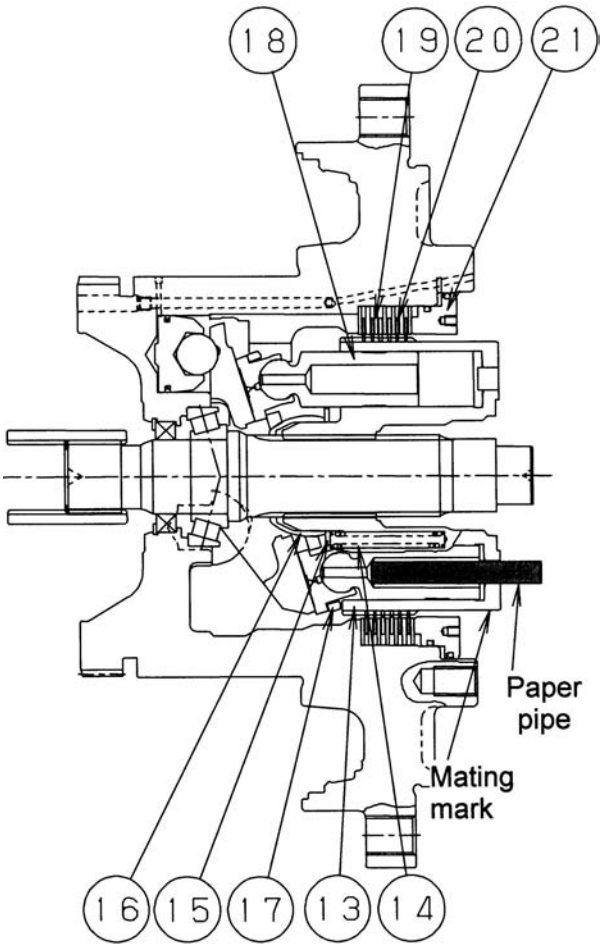

Figure 6. Removing cylinder block

※ Take care not to scratch sliding surfaces.
Do not reuse damaged ones.

※ It is impossible to disassemble piston and shoe because they are calked together.

FOR REFERENCE

Above disassembling is mentioned as a motor only and naturally can be applied to the motor with reduction gears.
The situation is rather easier for with reduction gears because the shaft is rather restricted by a gear to move.

https://truckmanualshub.com/

[14] Remove swash plate (12).

[15] Do not detach shifter piston ass'y (6), (7), (8).
If it needs to detach, attach a hand on shifter piston and supply plant air through the hole shown in Fig.19 and push it out.
Be aware of shifter piston (6) popping out.

[16] Shaft (9) can comes out now.

[17] If front bearing (10) happen to be changed, remove inner races and outer races using bearing puller if needed and exchange to new ones as an assembly.

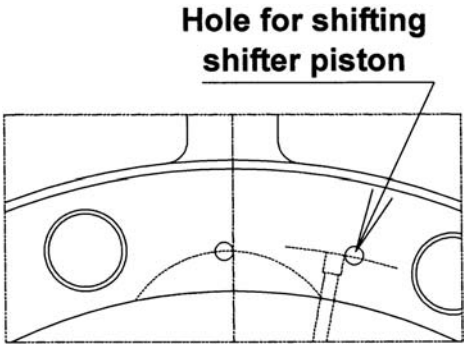

Figure 7. Enlargement figure of mating surface of casing

※ When changing bearings (10), (51), shaft(9), casing(1) or rear cover (24), it affects the clearance of the bearings.
Therefore, shim (52) should be adjusted.
Shim (52) adjustment should be performed by measuring correctly the clearance for shim and change shim that meets the clearance.
(See P.8/20)
Other jigs and tools are needed to measure and decide the thickness of the shim.Please contact dealers for them if necessary.

※ Do not remove pivots (11).
If it needs to disassemble them, put mating mark on pivots (11) with swash plate (12).

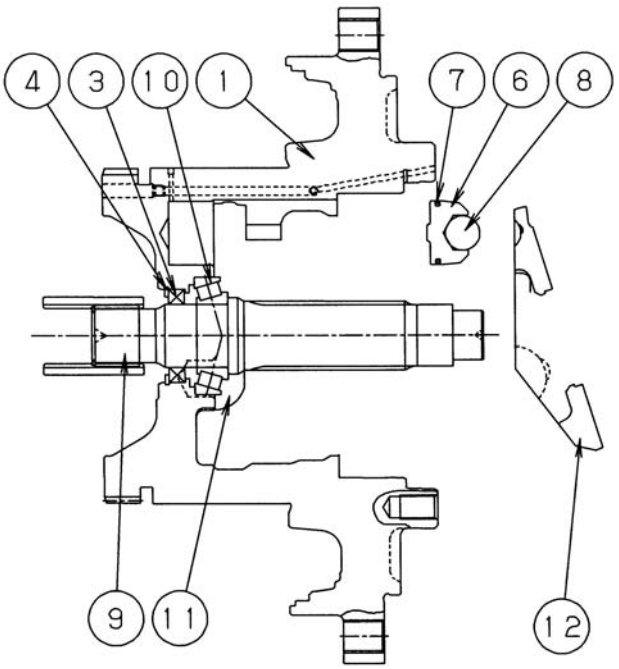

Figure 8. Removing swash plate

※ Never detach oil seal (3) only for the purpose of inspecting it.
If disassembled, remove retaining ring IRTW68 (4) first and remove oil seal (3).
Never fail to replace oil seal (3) with new one.

https://truckmanualshub.com/

[18] Deciding shim (52) thickness for tapered roller bearings.

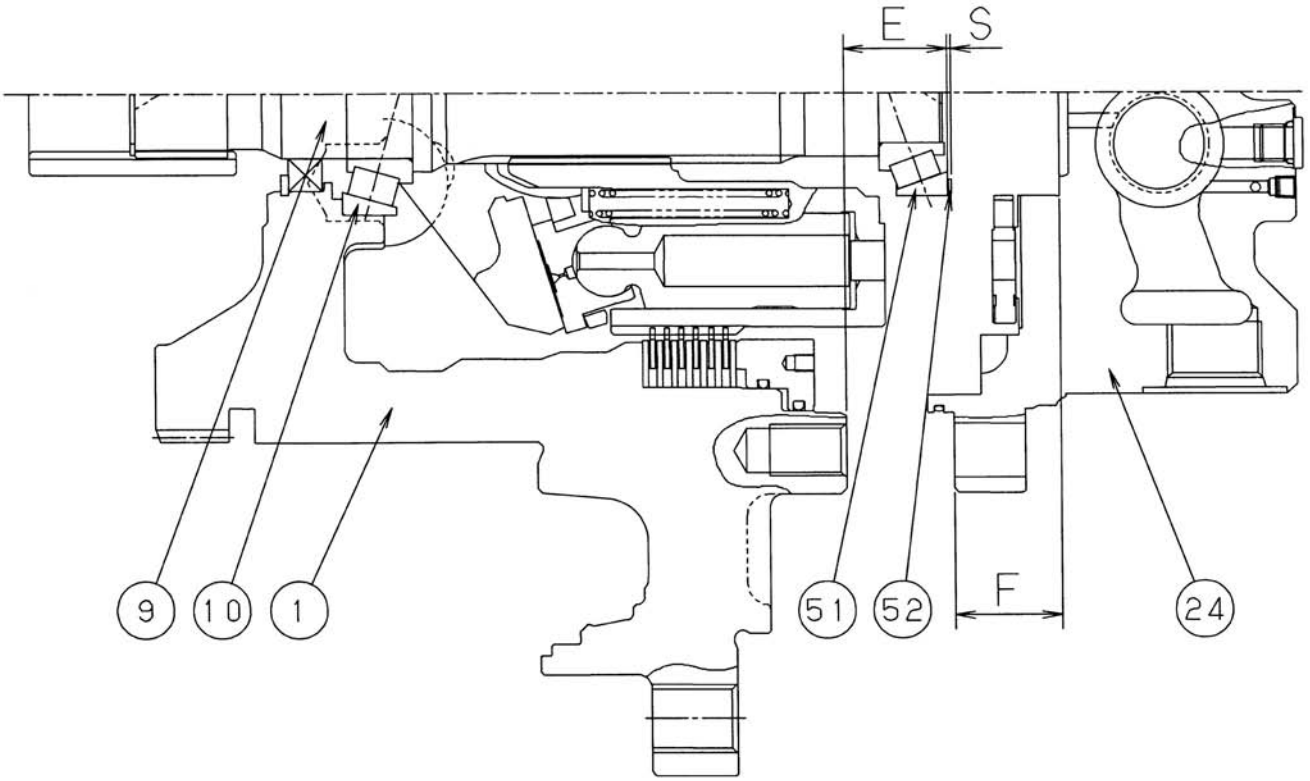

Figure 9. Deciding shim thickness

※ This work should be done only when you have changed bearings (10), (51), shaft (9), casing (1) or rear cover (24).

1) Measure the assembling width "E" (See Fig.9)
   ※ Take care not to incline shaft (9).
2) Measure the depth "F" of rear cover (24)
   ※ Measure them at crossed 4 places on the circuit, then calculate their mean value.
3) When thickness of shim (52) to be used is placed as "S", the clearance "Y" can be calculated as follows:
   Y=F-(E+S)
4) Select one or two shim (52) so as the clearance "Y" to come to 0-0.1 mm (clearance) on this unit.

https://truckmanualshub.com/

c) Disassembling overload relief valve

※ As a rule, overload relief valve (57) should be handled as one service part.
If there are any trouble on overload relief valve (57) , replace as an assembly.

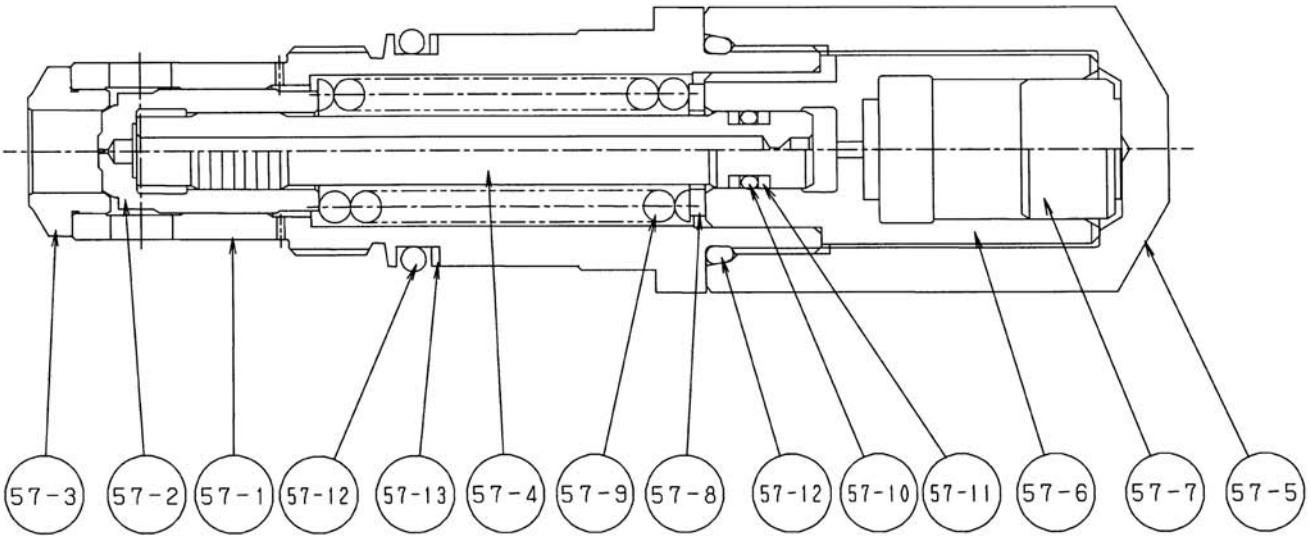

Figure 10. Disassembling overload relief valve

※ Valve seat (57-3) is fitted in bore of socket (57-1) at clearance fit.When removing overload relief valve (57), valve seat (57-3) easily comes off, so take great care not to lose.

When assembling overload relief valve (57) to rear cover (24), apply grease sufficiently on engagement part not to drop valve seat (57-3).

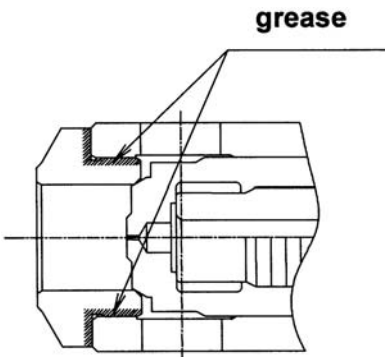

Figure 11. Engagement part of valve seat

https://truckmanualshub.com/

(3) ASSEMBLY

1) GENERAL PRECAUTIONS

[1] Wash each parts sufficiently with kerosene, and blow them by plant air.

[2] Assemble sliding parts after coating clean hydraulic oil on them.

⚠ [3] Take great care not to pinch your hand between parts or tools while assembling nor let fall parts on your foot while lifting them.

2) ASSEMBLING INSTRUCTIONS

[1] Coat outer surface of oil seal (3) and inner face of casing (1) with grease. Using jig, rightly and evenly press in the oil seal (3) into casing (1).

[2] Fix oil seal (3) by retaining ring (4).

[3] Put the outer race of bearing (10) on casing (1) (this fit is loose), and press the inner race on shaft (9) (this fit is tight).

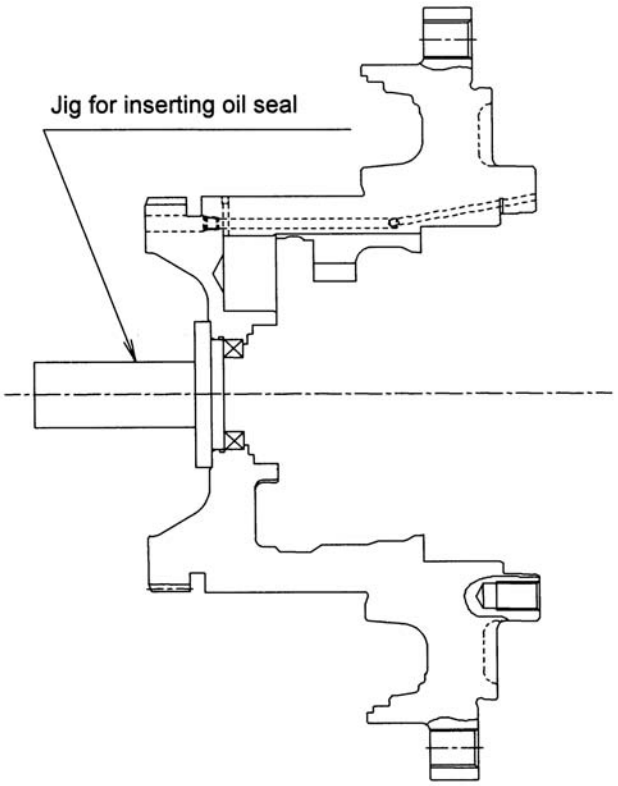

Figure 12. Inserting oil seal

※ It is easier to fit inner race if the inner race is heated or boiled under 100 degrees centigrade.
Never over heat!

⚠ Take great care not to burn

[4] Insert shaft (9) into casing (1) after coating grease on the contact surface to oil seal (3) lip.

[5] Put shifter piston ass'y (6), (7), (8) into casing (1).

※ Insert shifter piston ass'y not to incline

※ When inserting shifter piston ass'y, apply grease sufficiently on piston seal (7) and take a great care not to cut piston seal (7).

[6] Insert pivots (11) into the casing (1). Take care to match the mating mark with casing (1) and also to coincide the direction of sliding trace on sphere surface with those contact trace on swash plate (12) if the motor was operated a certain hours.

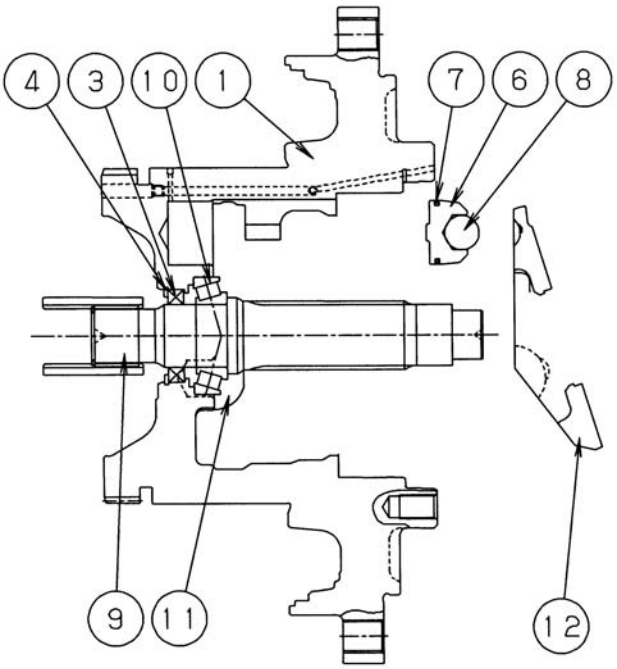

Figure 13. Assembling swash plate

[7] Apply grease sufficiently on three spherical recess of swash plate (12) and assemble it in casing (1).

https://truckmanualshub.com/

[8] Insert piston ass'ys (18), shoe retainer (17), ball joint (16), spring holder (15), cylinder spring (14) on to cylinder block (13) as shown and then insert the whole assembly to shaft (9).

⚠ Take great care not to pinch your hand between parts or tools while assembling nor let fall parts on your foot while lifting them.

※ Piston ass'ys (18) should be inserted into the same bore as before.

[9] Rightly knock in the inner race of rear bearing (51) to the rear end of shaft (9) by using jig (Al) and plastic hammer (A2).

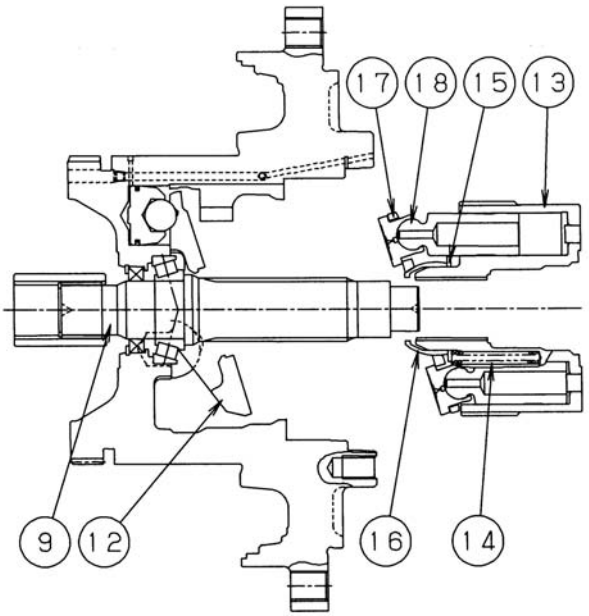

Figure 14. Assembling rotary group

[10] Install all the separating plates (19) and friction plates (20) alternately between casing (1) and cylinder block (13) adjusting on the notches and splines.
Separating plates (19) comes both first and last.

[11] Insert brake piston (21) into casing (1) using inserting jig (B) after attaching D-rings (22), (23) to brake piston (21).

※ Apply grease sufficiently on D-rings (22), (23).

※ Insert brake piston (21) by using inserting jig not to incline.
Two kinds of D-rings are used on brake piston (21). The larger one (23) is first inserted into the hole, then the smaller one (22) enters.
It is impossible to see how the smaller ring goes into the hole. Therefore, never push it forcibly into the hole.
Otherwise, it may be scraped off by the edge of the hole of casing (1).

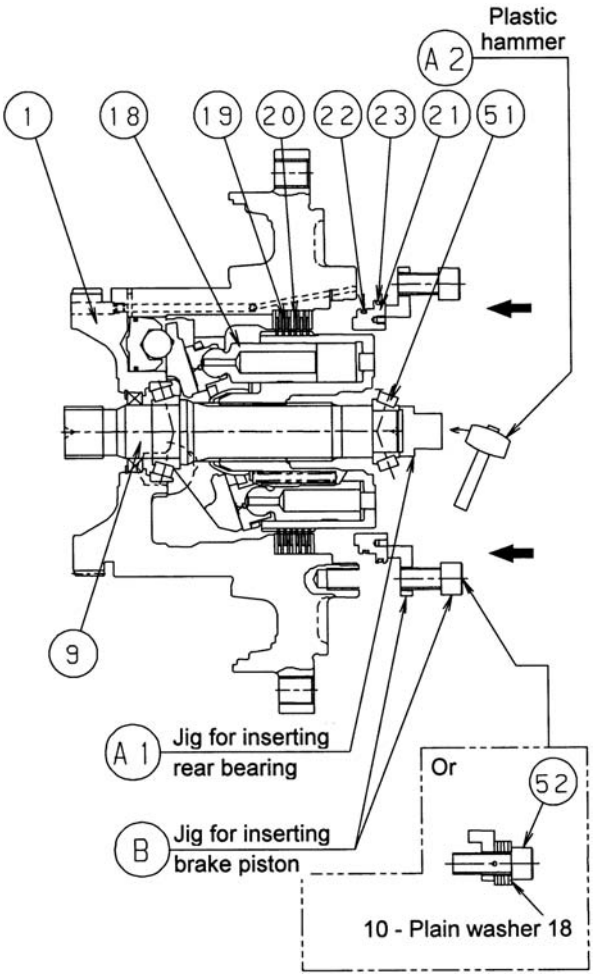

Figure 15. Inserting brake piston

https://truckmanualshub.com/

※ When changing bearings (10), (51), shaft (9), casing (1) or rear cover (24), it affects the clearance of the bearings. Therefore, shim (52) should be adjusted.
Refer to "Deciding shim (52) thickness for tapered roller bearings" (PAGE 8/20) and decide shim (52) thickness.

[12] Install two guide pins diagonally on casing (1).
(Purpose: Guide for installing rear cover)

[13] Lay down rear cover (24) to mount valve plate (54) coinciding mating mark made prior to disassembling and also place brake springs (55) with ample grease to be attached to rear cover (24) while assembling.
Also set shim (52), outer race of rear bearing (51) and O-rings (50), (47), (49) on rear cover (24).

[14] Insert rear cover (24) to casing (1) along the guide pin, and install two Hex. socket head bolts M18 x 50 (56) diagonally upper and lower position and tight them to assemble rear cover (24) parallely.

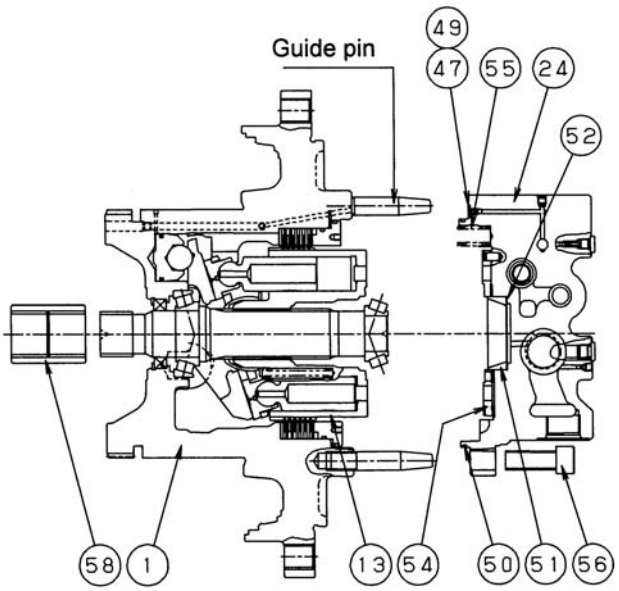

Figure 16. Assembling brake piston

Then, install the rest of Hex. socket head bolts M18 x 50 (56) and remove guide pin and install two the remainder.

⚠ Take great care not to pinch your hand between parts or tools while assembling nor let fall parts on your foot while lifting them.

※ When removing outer race of rear bearing (51), install shim (52) without fail.
Confirm that O-rings (47), (49), (50) are installed to rear cover (24).

※ Tightening torque of Hex. socket head bolt M18 x 50 (56) is 324 ±32.4 N-m without removing rust preventive agent on the threads.

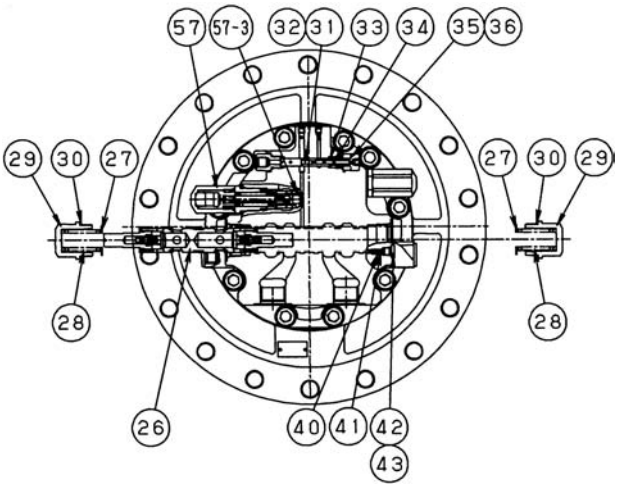

Figure 17. Assembling accessory valves

[15] Assemble coupling (58).

[16] Assemble spring (34), spring holder (33), pilot valve spool (31) and pin (32) to rear cover (24), and then install pilot valve plug (35) with O-ring (36).

※ Tightening torque of pilot valve plug (35) is 49.0 - 58.8 N-m.

https://truckmanualshub.com/

[17] Assemble overload relief valves (57).

※ Valve seat (57-3) is fitted in bore of socket (57-1) at clearance fit.
When assembling overload relief valve (57) to rear cover (24), valve seat (57-3) easily comes off, so take great care not to lose and apply grease sufficiently on engagement part not to drop valve seat (57-3).

※ Tightening torque of overload relief valve (57) is 98.1 - 118 N-m

[18] Assemble restrictor (40) and restrictor spring (41) to rear cover (24), and then install G/18 plug (42) with O-ring (43).

※ Tightening torque of G1/8 plug (42) is 14.7 N-m.

※ In case of assembling NEW restrictor (40), fit valve seat of restrictor (40) with rear cover (24).
(After inserting restrictor (40) to rear cover (24), knock restrictor (40) slightly by hammer.)

[19] Inserting spool ass'y (26) to rear cover (24) coinciding mating mark made prior to disassembling, and then assemble spring holder (27) and spring (28).

※ Spool ass'y (26) is unsymmetry. Insert spool ass'y (26) in an appropriate direction.

[20] Assemble M42 plug (29) with O-ring (30).

※ Tightening torque of M42 plug (29) is 441 - 446 N-m.

(4) INITIAL PRE-CONDITIONING OPERATION

a) Drain charge

Fill up hydraulic oil in the motor casing after assembling.
M4V290/170E motor has two drain ports (G1/2). Bleed air in motor casing from un-piping port (upper side).

b) Initial Pre-conditioning operation

Operate motor 5 minutes at low speed mode and low-idle, check if there are abnormal noise or leak of oil.

https://truckmanualshub.com/

3. Maintenance Standard

(1) MAINTENANCE STANDARD OF PARTS

The followings are the general maintenance standards. However, it is the most important to determine which parts should be replaced, depending on the characteristics before disassembling, damages and discoloration of exterior view, the purpose of disassembling, the expected remaining service life, etc..

ITEM AND MEASURING METHOD

1) Sliding surface of: cylinder block, valve plate and swash plate

JUDGING CRITERIA AND DISPOSITOIN

Measure the surface roughness by roughness tester.

Check Items	Criteria	Allowable Roughness	Disposition
Surface roughness; -cylinder block -valve plate -swashnlate	below 0.4 z μ	below 3.0 z μ	Replace or Repair

Table2

Note: Lap together the surfaces of both cylinder block and valve plate to remedy their roughness. (Lap with #1200 powder)

Measure the surface hardness of swash plate by hardness tester.

Check Items	Criteria	Allowable Handness	Disposition
Swash plate -hardness of sliding surface	Over HS78	HS74	Replace

Table3

2) Clearance between piston and cylinder block

JUDGING CRITERIA AND DISPOSITOIN

Measure outer dia. of piston and bore of cylinder block at least 3 places in the longitudinal direction with micrometer, and obtain:
max. outer dia. = d max
min. outer dia. = d min
min. inner dia. = D min
max. inner dia. = D max

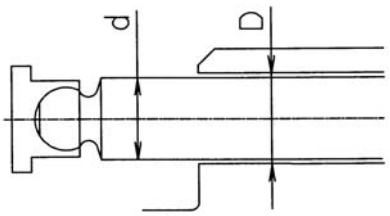

Figure 18. Measurement position

Check Items	Criteria	Allowable Clearance	Disposition
Outer diameter of piston d max-d min	0.01 mm	0.05 mm	Replace piston or cylinder block
Inner diameter of cylinder bore D max - D min	0.01 mm	0.022 mm	
Clearance D-d	0.037 - 0.047 mm	0.065 mm	

Table4

https://truckmanualshub.com/

3) Play between piston and shoe

JUDGING CRITERIA AND DESPOSITOIN

With the jig of Fig.21, hold down the shoe on work stand, and pull up the piston vertical direction to measure the play between piston and shoe.(See Fig.19, 20)

Check Items	Criteria	Allowable play	Disposition
Play between calked piston and shoe	0-0.1mm	0.3 mm	Replace piston

Table5

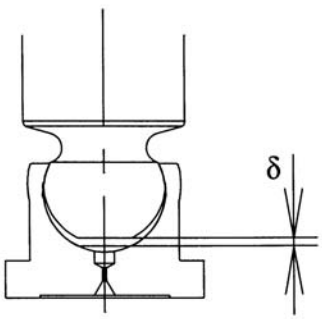

Figure 19. Play

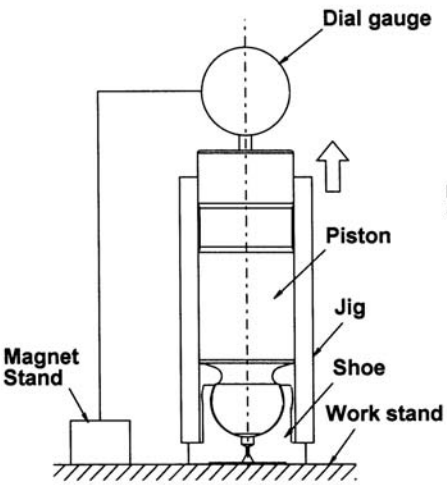

Figure 20. Method

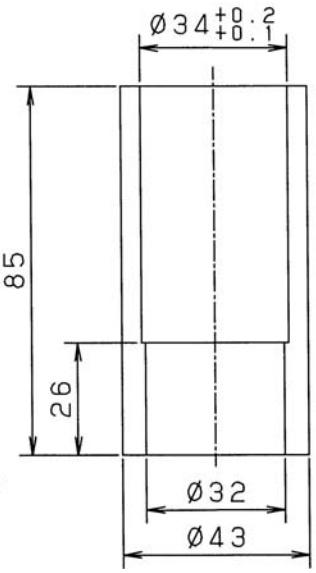

Figure 21. Jig

https://truckmanualshub.com/

4) Parking brake torque

JUDGING CRITERIA AND DISPOSITOIN

After completion of assembly, set the torque wrench on the shaft end, and measure the braking torque generated when the shaft starts to rotate.

Check Items	Criteria	Allowable Torque	Disposition
Parking brake torque	1,171 N-m	1,055 N-m	Replace all -separator and friction plates -sprinXgs

Table6

JUDGING CRITERIA AND DISPOSITOIN

Standard of replacing friction and separating plate.

When measuring parking brake torque, it needs to disassemble traveling unit to motor and reduction gear portion, and it's so hard.
The right allowable value is a standard of replacing friction and separating plate.
If it is impossible to disassemble traveling unit, refer to the right value.

Standard of replacing friction and separating plate

Measure the total thickness of 6 pieces of friction plate and 7 pieces of separating plate.
And if the total thickness is below the following allowable value, replace all separating and friction plates and springs.

Criteria: 33.04 mm (Dimension in the drawing)

Allowable Thickness : 31.5 mm

5) Shaft

Measure the wear at contacting surface of oil seal (3) with the surface roughness tester.

JUDGING CRITERIA AND DISPOSITOIN

If the depth of shaft wear is less than 0.05 mm, the shaft is reusable.

※ In case of replacing the shaft (9), replace oil seal (3) at the same time.

6) Bearing

Replace bearing (10), (51) after decided hours.

JUDGING CRITERIA AND DISPOSITOIN

Replace bearings (10), (51) before hour meter of host machine indicates 10,000 hours.

※ In case replacing the bearings (10), (51), replace both inner and outer races at the same time.

※ Also the bearing shims (52) must be re-adjusted when replaced shaft (9) and/or bearings (10), (51).
Contact dealers for jigs and tools required.

https://truckmanualshub.com/

7) Splines

Replace if the wear of splines exceeds the allowable value.

JUDGING CRITERIA AND DISPOSITOIN

If the wear of splines is less than 0.3 mm, the spline is reusable.

8) Overload relief valve

Do not try to adjust the valve, since special hydraulic test bench is required for inspecting and adjusting the pressure.

JUDGING CRITERIA AND DISPOSITOIN

Replace relief valve part as an assembly each time the host machine works for 10,000 hours.

(2) TIGHTENING TORQUE

Use torque wrench when tightening the following Hex. socket head bolt, plugs and valves. Lubricating with rust preventive oil.

ITEM	DESCRIPTION	SIZE	TIGHTENING TORQUE (N・m)
(29)	Plug	M42	441 - 461
(35)	Plug (Pilot valve)	G3/8	49.0 - 58.8
(38)	Plug	G1/4	29.4
(42)	Plug	G1/8	14.7
(56)	Hex. socket head bolt	M18	324 ± 32.4
(57)	Overload relief valve	M27	98.1 - 118
(60)	Plug	G1/2	98.1

Table 7

https://truckmanualshub.com/

4. CAUSES OF ERRORS AND REMEDIES

The followings are the general instructions to be followed when some troubles occur with hydraulic motors.

(1) GENERAL PRECAUTIONS

[1] Judge the nature of abnormality before trouble shooting, and ascertain if the same symptom has occurred before or not.
Review if the motor itself is actually troubled.

[2] In many cases, the wear is caused by dusts.
Take great care to prevent dusts in disassembling and assembling.

[3] All the parts especially those of moving parts should be carefully handled, and be careful not to score or scratch the sliding surfaces.

[4] Be careful not to score the seating surface for O-ring, etc..
We recommend you to replace O-rings with the new ones, if once disassembled.

(2) CAUSES OF ERRORS AND REMEDIES

1) Hydraulic motor never starts

SYMPTOM	CAUSE	REMEDY
Pressure never increases	Malfunction of built-in relief valve.	Repair or replace relief valve
Pressure increases	1. Parking brake is not released 1) Clogging of restrictor	1. After inspection of clogging, repair or replace
	2. Parking brake is not released 1) Spool is installed in wrong direction	2. Re-install the spool in correct direction
	3. Stuck friction or separating plate of parking brake portion	3. Replace friction and separating plate
	4. Stuck brake piston	4. Repair outer dia. of brake piston or replace It.
	5. Seizure of sliding poston	5. Check, repair or replace piston shoe, swash plate, cylinder block valve plate etc..
	6. Malfunction of spool 1) Stick between spool and body 2) Clogging of restrictor	6. Repair or replace

https://truckmanualshub.com/

2) Hydraulic motor rotates weakly

SYMPTOM	CAUSE	REMEDY
Set pressure of overloadvalve is correct, but brake is released belatedly	Malfunction of spool 1) Stick between spool and body	Repair or replace
Negative brake is released, but motor is hard to start	high oil viscosity.	Raise oil temperature or change the hydraulic oil
Negative brake is released, but motor starts weakly	1. Negative brake is not completely released. 1) Clogging of choke of pressure release passage 2. Relief valve catches small particles 3. Seizure of sliding portion	1. Check clogging of choke 2. Wash relief valve, check or replace seat of it 3. Check, repair or replace sliding portion

3) Drive shaft never rotate up to the set value

SYMPTOM	CAUSE	REMEDY
Rotation of drive shaft never reaches the set value	1. Shortage of oil coming in 2. Large wear or flaw made on shoe, cylinder block or valve plate	1. Check oil flow or hydraulic circuit to motor. 2. Check, repair or replace the parts

4) Brake refuses to work

SYMPTOM	CAUSE	REMEDY
Brake refuses to work	Malfunction of negative brake 1) Worn friction plate 2) broken spnng	Check, repair or replace brake piston, friction plate, spring, etc.
Brake works on cunter lever operation	Malfunction of spool 1) Stick between spool and body 2) Stick of check valve or that by small particle 3) Clogging of restrictor	Repair or replace or clean up

5) Oil leakage

SYMPTOM	CAUSE	REMEDY
Oil leakage	1. Loose Hex. socket head bolt or plug 2. O-ring is torn off 3. Oil leaks inside gear casing	1. Fasten it with given torque 2. Replace O-ring 3. Replace oil seal

https://truckmanualshub.com/

6) Would not shift from high to low

SYMPTOM	CAUSE	REMEDY
Would not shift from high to low	Stick of spool of pilot valve	Replace pilot valve ass'y.

7) Abnormal noise

SYMPTOM	CAUSE	REMEDY
Abnormal noise appear together with big vibration when brake is slowly applied or oil is supplied to other circuits while motor is running	Malfunction of spool 1) Air is caught inside brake valve	Bleed air
	Stick between spool and body	Repair or replace

8) Hunting occurs while descending the slope

SYMPTOM	CAUSE	REMEDY
Severe hunting while inching	Malfunction of spool 1) Stick between spool and body 2) Restrictor is not seated completely	Repair or replace
	Interference with parking brake 1) Permanent set or broken spring	Repair or replace

https://truckmanualshub.com/

Reduction Gears (Unit)

1. Structural Drawing

(1) Structure

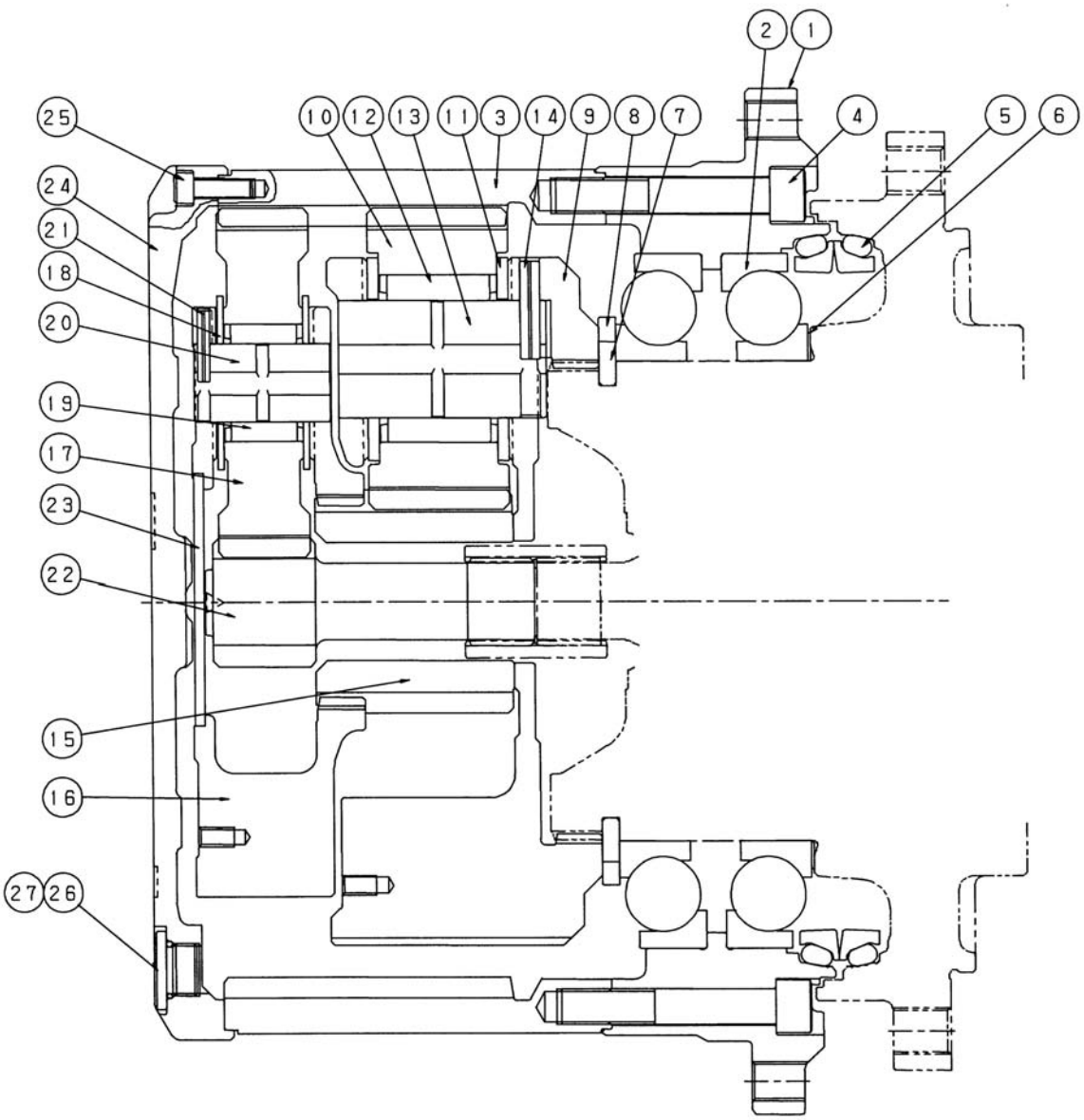

Figure 1. Structure of traveling unit

1	housing	11	thrust washer 2	21	spring pin 6 x 36
2	bearing 245BA35S1GS	12	needle bearing FBNP-608660	22	sun gear 1
3	ring gear	13	carrier pin 2	23	thrust plate
4	HEX. socket head bolt M18 x 110	14	spring pin 10 x 50	24	cover
5	floating seal 368	15	sun gear 2	25	HEX. socket head bolt M10 x 30
6	shim	16	carrier 1	26	plug G3/4
7	lock washer	17	planetary gear 1	27	O-ring 1B P24
8	support ring	18	thrust washer 1		
9	carrier 2	19	needle bearing FBNP-406040		
10	planetary gear 2	20	carrier pin1		

https://truckmanualshub.com/

2. Disassembly and Assembly

(1) Tools

1) Tools and jigs

DESCRIPTION	SPECIFICATIONS etc.
Hex. key	Width across flat 8, 14 mm
Torque wrench	For 490 N-m
Work stand	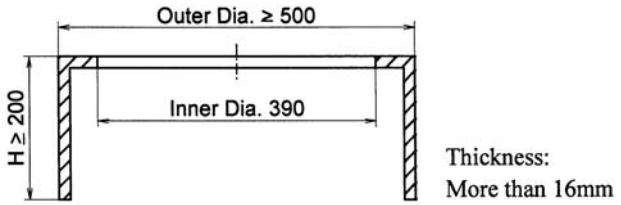
Micro depth gauge	0-15 mm
Vernier caliper	0-150 mm
Pin	For knocking in spring pin (14) and (21) dia. 5.5 x 80, dia. 9.5 x 60
Eye bolt	M10, M20 (or equiv. Hooks) each 3 pcs. each
Vertical press and jigs	To press in angular bearings and to assemble its lock washers. (press capacity 3 ton)
Other small items	Kerosene as cleaner, solvent, gear oil, grease, Loctite#242 and #515, seal tape, waists etc.

https://truckmanualshub.com/

(2) DISASSEMBLY

1) GENERAL INSTRUCTIONS

Combustibles such as white kerosene are used for washing parts. These combustibles are easily ignited, and could result in fire or injury.
Be very careful when using.

Internal parts are coated with gear oil during disassembly and are slippery. If a part slips out of your hand and falls, it could result in bodily injury or could damage the part.
Be very careful when handling.

[1] Therefore, disassembling and assembling works should be performed on the clean place where dusts hardly gather.
Tools and kerosene to wash parts should also be clean and handled with great care.

[2] Before disassembling, review the sectional drawing and prepare the required parts, depending on the purpose and the range of disassembling.
Seals, O-rings, etc., if once disassembled, are not reusable.
There are some parts that should be replaced as a sub-assembly.
Consult with the parts book in advance.

[3] Take great care not to pinch your hand between parts while disassembling nor let fall parts on your foot while lifting them.

2) DISASSEMBLING PROCEDURES

※ Numeral in ( ) after the part name corresponds to the number on structure drawing Fig.1 on page 1/17.

a) Preparation for disassembling

[1] The reduction units removed from excavator are usually covered with mud.
Wash outside of propelling unit sufficiently and dry it.
There is dread of the burn, disassemble reduction unit after cooling it to ambient temperature.

[2] Loosen taper screw plug G3/4 (26) of drain and fill port and drain oil from reduction gears.
While oil is still hot, inside of the unit may be pressurized. Take care of the hot oil gushing out of the unit when loosening the plug.

[3] Mark for mating
Put marks on each mating parts when disassembling so as to reassemble correctly as before.

https://truckmanualshub.com/

b) Setting reduction unit (or whole propelling unit) on work stand

[1] Remove Hex. socket head bolts M10 x 30 (25) at 3 places from cover (24) almost equally apart each other, then install M10 eye bolts.
Lift up the unit using them and place it on work stand with cover (24) upward.

Take great care not to pinch your hand between parts while disassembling nor let fall parts on your foot while lifting them.

Lift the parts up horizontally.

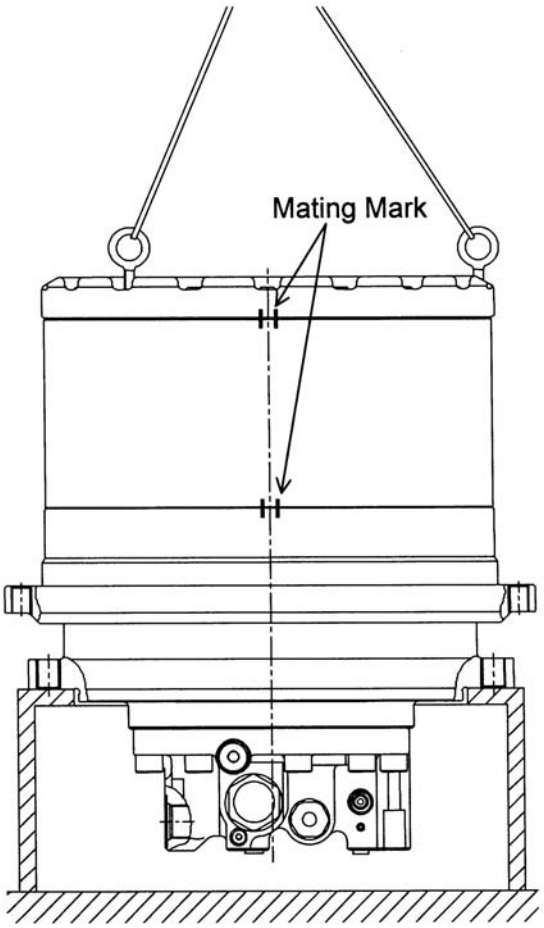

Figure 2. Setting propelling unit on work stand

c) Removing cover

[1] Remove the rest of Hex. socket head bolts M10 x 30 (25) that secure cover (24).

Figure 3. Removing Hex. socket head bolts M10

https://truckmanualshub.com/

[2] As the cover (24) is adhered to ring gear (3), remove cover (24) by lightly hammering slantwise upward by wooden bar aiming at projection of cover (24).

Take great care not to pinch your hand between parts while disassembling nor let fall parts on your foot while lifting them.

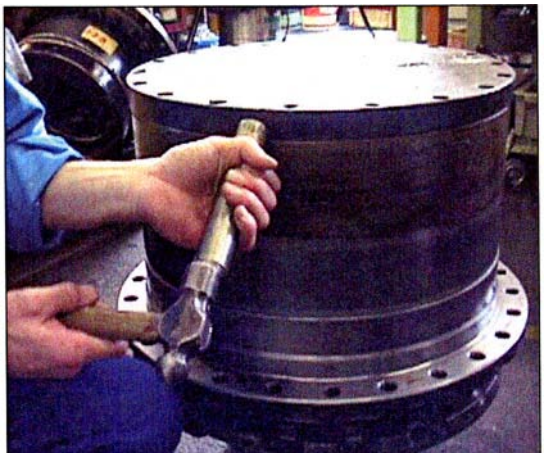

Figure 4. Removing cover

d) Removing carrier 1 ASSY

[1] Remove thrust plate (23).

[2] Screw three M10 eye bolts in carrier 1 (16) and lift up and remove carrier 1 as sub-ass'y (16), (17), (18), (19), (20), (21).

Take great care not to pinch your hand between parts while disassembling nor let fall parts on your foot while lifting them.

Lift the parts up horizontally.

[3] Remove sun gear 1 (22).

Take great care not to pinch your hand between gears while disassembling.

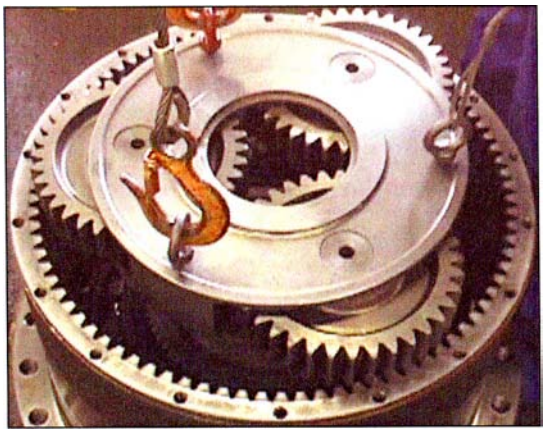

Figure 5. Removing carrier 1 ASSY

e) Removing carrier 2 ASSY

[1] Remove sun gear 2 (15).

Take great care not to pinch your hand between gears while disassembling.

[2] Screw three M10 eye bolts in carrier 2 (9) and lift up and remove carrier 2 as sub-ass'y (9), (10), (11), (12), (13), (14).

Take great care not to pinch your hand between parts while disassembling nor let fall parts on your foot while lifting them.

Lift the parts up horizontally.

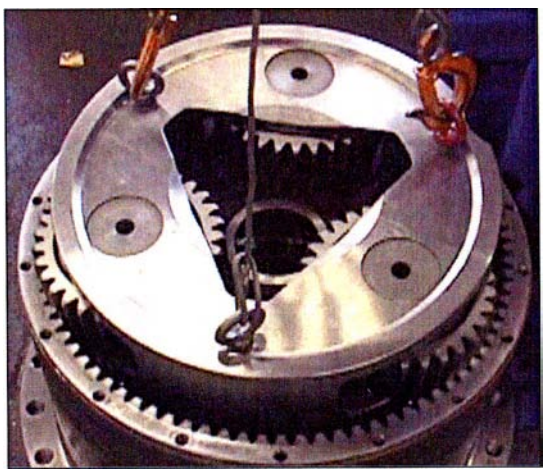

Figure 6. Removing carrier 2 ASSY

https://truckmanualshub.com/

f) Disassembling housing ASSY

[1] Remove support ring (8).

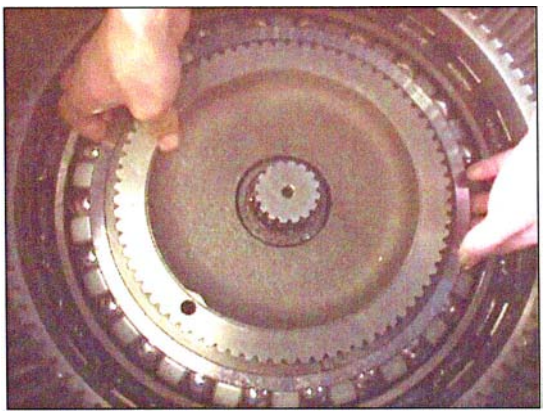

Figure 7. Removing support ring

[2] Take off lock washers (7) by tapping on screw driver or on similar tool placed at parting surface of them.

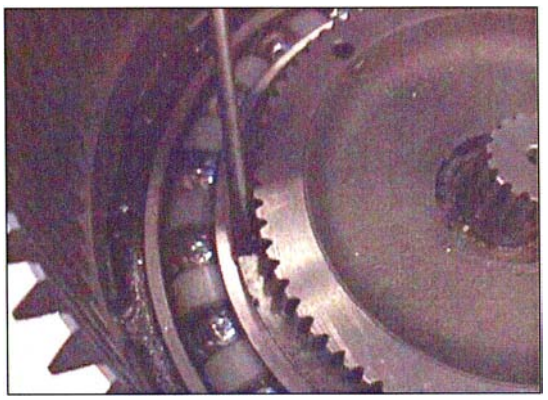

Figure 8. Removing lock washer

[3] Screw three M10 eye bolts in ring gear (3) almost equally apart each other, then lift it up horizontally and remove housing ASSY including ring gear (3), housing (1), angular bearing (2), a piece of floating seal (5) and Hex. socket head bolts M18 x 110 (4) together.

Take great care not to pinch your hand between parts while disassembling nor let fall parts on your foot while lifting them.

Lift the parts up horizontally.

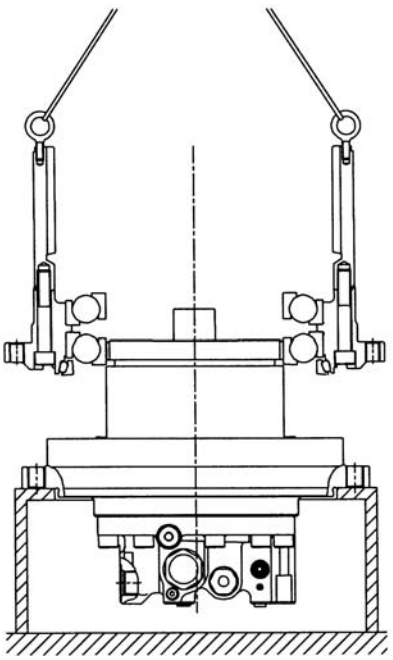

Figure 9. Removing housing ASSY

https://truckmanualshub.com/

g) Disassembling housing ASSY

[1] Screw three M20 eye bolts in housing (1) almost equally apart each other. Lift up the housing ass'y and place it on work stand with housing (1) upward.
Put a mating mark outside of housing (1) and ring gear (3).

Take great care not to pinch your hand between parts while disassembling nor let fall parts on your foot while lifting them.

Lift the parts up horizontally.

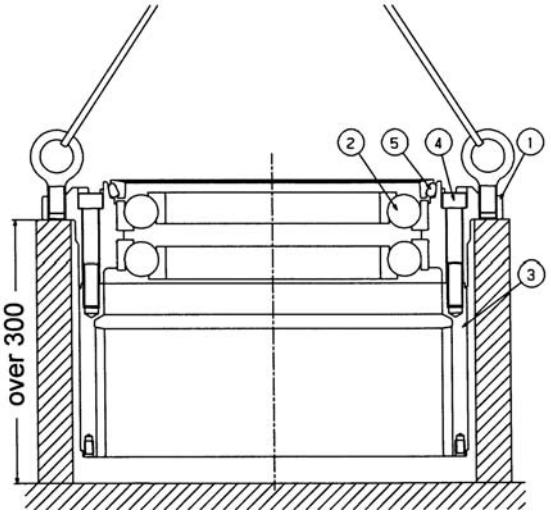

Figure 10. Disassembling housing ASSY

[2] Remove floating seal (5) from housing (1).

[3] Remove Hex. socket head bolts M18 x 110 (4), leaving two of them diagonally.

[4] Loosen the rest two Hex. socket head bolts M18 x 110 (4) and tap lightly the head of them then ring gear (3) can be easily removed from housing (1).

Take great care not to pinch your hand between parts while disassembling nor let fall parts on your foot while lifting them.

Figure 11. Removing floating seal

※ Take care not to damage the sliding surface offloating seal (5) or its O-ring.

Bearings (2) have been tightly press fitted in housing (1). Don't remove the bearings (2) unless otherwise their exchange is needed.
In case bearings (2) removed, don't re-use them.
New bearings (2) should be used and shim (6) adjusting be required.

h) Removing floating seal

[1] Remove a piece of floating seal (5) of motor side.

https://truckmanualshub.com/

i) Disassembling carrier 1 ASSY

※ When carrier pins 1 (20) are to be re-used, mark each pin with its mated hole of carrier 1 (16) to assure the same combination as before.

[1] Knock spring pins 6 x 36 (21) fully into carrier pins 1 (20).

[2] Tap carrier pins 1 (20) out from carrier 1 (16).

[3] Remove thrust washers 1 (18), planetary gears 1 (17) and needle bearings (19).

⚠ Take great care not to pinch your hand between gears and carrier 1 (16) while disassembling.

[4] Knock out spring pins 6 x 36 (21) from carrier pins 1 (20) for re-assembling.

※ When carrier pin 1 (20) or planetary gear 1 (17) is needed to be exchanged, three pins or three gears should be all exchanged.

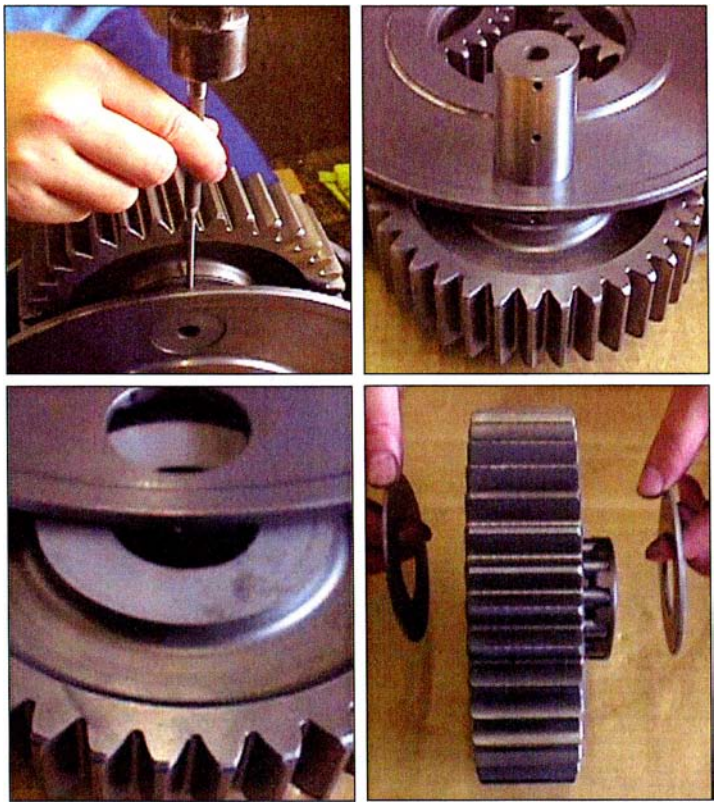

Figure 12. Disassembling carrier 1 ASSY

j) Disassembling carrier 2 ASSY

※ When carrier pins 2 (13) are to be re-used, mark each pin with its mated hole of carrier 2 (9) to assure the same combination as before.

[1] Knock spring pins 10 x 50 (14) fully into carrier pins 2 (13).

[2] Tap carrier pins 2 (13) out from carrier 2 (9).

[3] Remove thrust washers 2 (11), planetary gears 2 (10) and needle bearings (12).

※ Take great care not to pinch your hand between gears and carrier 2 (9) while disassembling.

[4] Knock out spring pins 10 x 50 (14) from carrier pins 2 (13) for re-assembling.

※ When carrier pin 2 (13) or planetary gear 2 (10) is needed to be exchanged, three pins or three gears should be all exchanged.

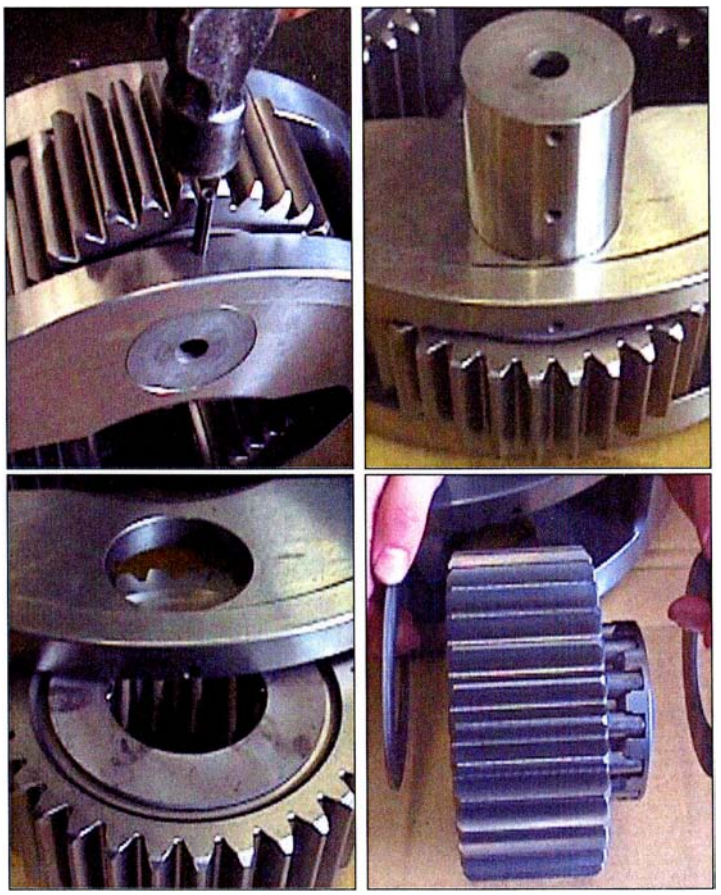

Figure 13. Disassembling carrier 2 ASSY

https://truckmanualshub.com/

(3) ASSEMBLY

1) GENERAL INSTRUCTIONS

[1] Clean every part by kerosene and dry them by air blow. Surfaces to be applied by Loctite must be degreased by solvent.

[2] Check every parts for any abnormals.

[3] Each Hex. socket head bolt should be used with Loctite #242 applied on its threads.

[4] Apply gear oil slightly on each part before assembling.

[5] Remove the refuse of Loctite #242 in thread holes by tap and degrease by solvent.

⚠ [6] Take great care not to pinch your hand between parts while assembling nor let fall parts on your foot while lifting them.

2) ASSEMBLING PROCEDURES

a) Assembling carrier 2 ASSY

[1] Install planetary gears 2 (10), needle bearings (12) and thrust washer 2 (11) into carrier 2 (9).

⚠ Take great care not to pinch your hand between gears and carrier 2 (9) while assembling.

Install carrier pins 2 (13) into carrier 2 (9) where the holes for spring pins 10 x 50 (14) are to be in line with those of carrier 2 (9).

Install spring pins 10 x 50 (14) into carrier 2 (9) and at the same time into carrier pins 2 (13).

(Sink spring pins of 1 - 2 mm from surface)

Calk carrier 2 (9) on diagonally position to prevent spring pin 10 x 50 (14) from coming out.

※ Refer to Fig.15 "Detail of calking".

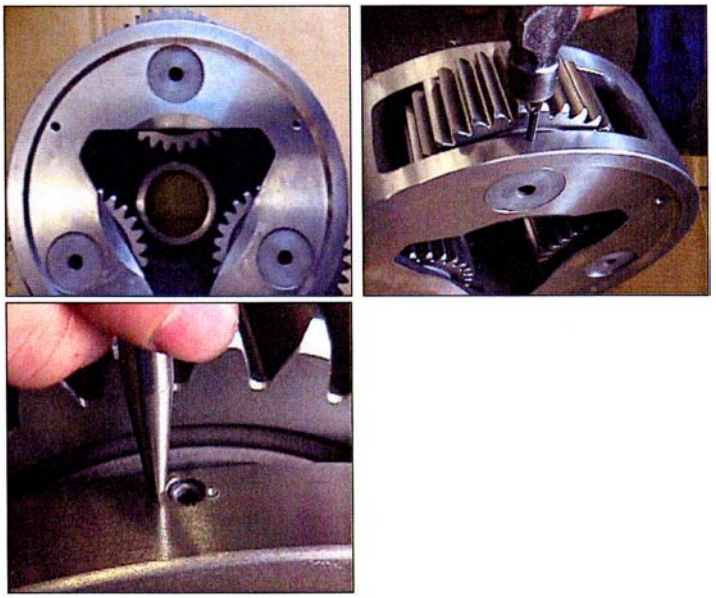

Figure 14. Assembling carrier 2 ASSY

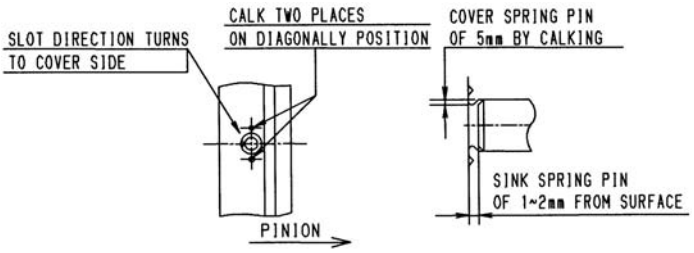

Figure 15. Detail of calking

https://truckmanualshub.com/

b) Assembling carrier 1 ASSY

[1] Install planetary gears 1 (17), needle bearings (19) and thrust washers 1 (18) into carrier 1 (16).

⚠ Take great care not to pinch your hand between gears and carrier 1 (16) while assembling.

[2] Install carrier pins 1 (20) into carrier 1 (16) where the holes for spring pins are to be in line with those of carrier 1 (16).

[3] Install spring pins 6 x 36 (21) into carrier 1 (16) and at the same time into carrier pins 1 (20).
(Sink spring pins of 1 - 2 mm from surface)

[4] Calk carrier 1 (16) on diagonally position to prevent spring pin 6 x 36 (21) from coming out.

※ Refer to Fig.15 "Detail of calking".

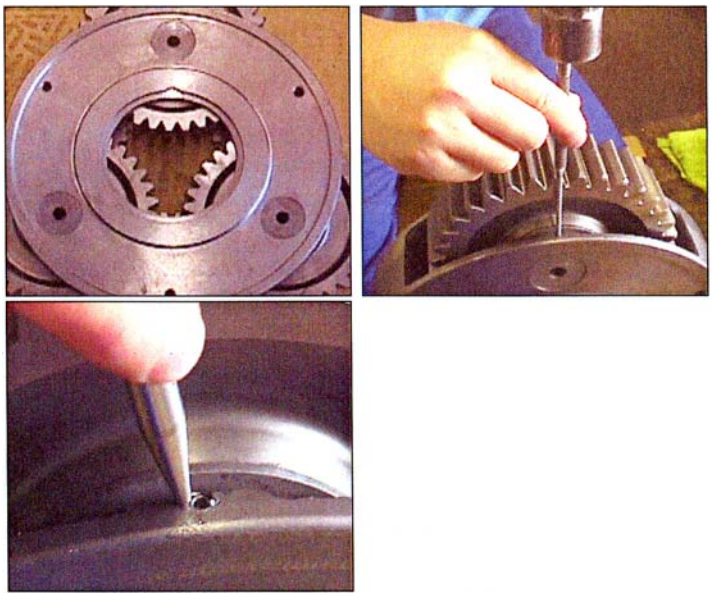

Figure 16. Assembling carrier 1 ASSY

c) Installing main bearing and floating seal

[1] Install main bearing (2) to inner surface of housing (1).

[2] Install a piece of floating seal (5) on motor casing and also install another piece of floating seal (5) on housing (1).

※ Clean the groove for floating seals (5) to eliminate oil, dust, paint or other foreign material.

Figure 17. Installing floating seal

※ Apply gear oil slightly on sliding surfaces of floating seals (5) before assembling but strictly dry on O-rings and on its grooves.

※ Confirm that O-ring of floating seals (5) are not twisted and that floating seals are correctly installed, i.e. parallel as shown each other between housing (1) and motor casing after assembled. (see Fig.18)
It is recommended to use jig to install floating seal.

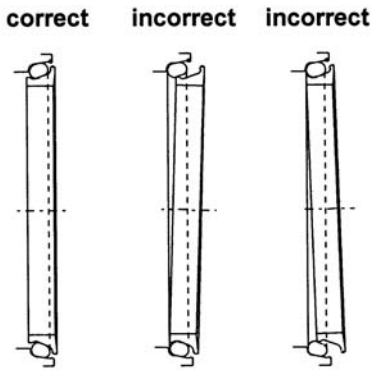

gure 18. Installing direction of floating se

https://truckmanualshub.com/

d) Assembling housing ASSY

[1] Apply Loctite #515 on mating surfaces of housing (1) and ring gear (3) without a gap.

[2] Install three M20 eye bolts equally apart on housing (1).
Using the eye bolts, hang the housing (1) by wire rope and place it on ring gear (3), coinciding mating marks.

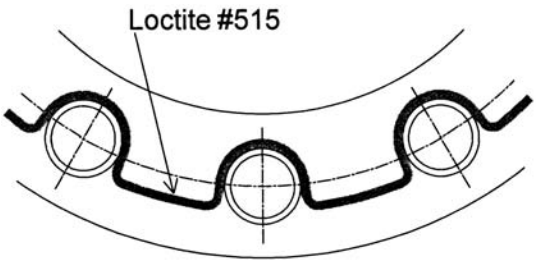

Figure 19. Applying Loctite #515 on mating surface of housing

⚠ Take great care not to pinch your hand between parts while assembling nor let fall parts on your foot while lifting them.

⚠ Lift the parts up horizontally.

[3] After applying Loctite #242 on the threads of 25 pieces of Hex. socket head bolts M18 x 110 (4), tighten them with torque wrench.

※ Refer to Fig.21 "How to apply Loctite #242"

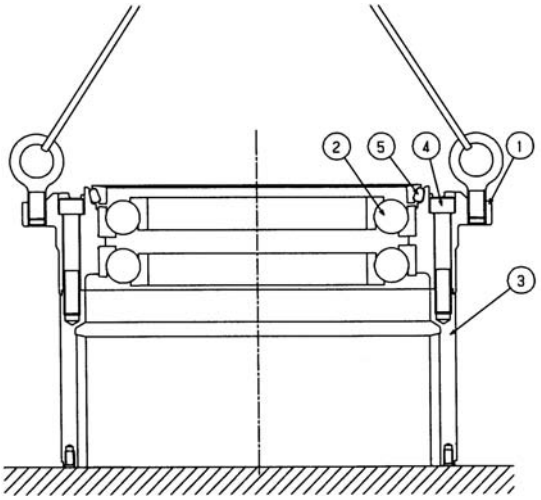

Figure 20. Assembling housing ASSY

※ Tightening torque of Hex. socket head bolt M18 x 110 (4) is 402 ± 39.2N-m without removing rust preventive agent on the threads.

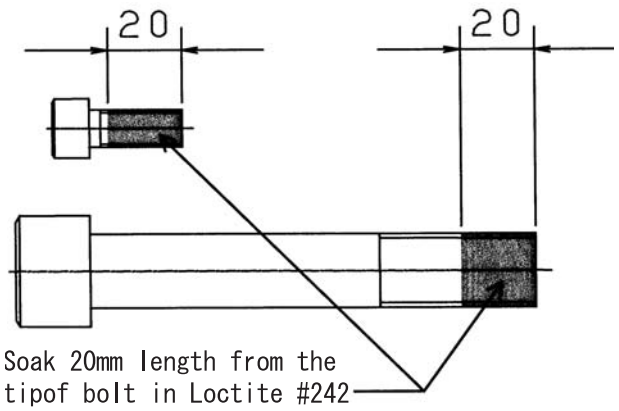

Figure 21. How to apply Loctite #242

https://truckmanualshub.com/

e) Deciding shim thickness for angular bearings

※ This work should be done only when you have to change motor casing, housing (1), bearings (2) or lock washers (7). Unless otherwise use the same shim (6) as before.

[1] Fit in two bearings (2) on housing (1) pressing their outer laces.

[2] Press inner laces of two bearings (2) lightly and evenly, measure the assembling width "A" of inner laces.

※ When measuring the assembling width "A", rotate bearings (2) at least 5 times and become the width "A" stably.

[3] Measure the motor side assembling width "B" for bearings (2).

[4] Measure the groove width "C" of motor casing.

[5] Measure the thickness "D" of lock washers (7).

※ Measure them at 4 places evenly apart on the circumferences then calculate and use those mean values.
Measure them to the accuracy of 0.01 mm.

[6] When thickness of shim (6) to be used is placed as "S", the clearance "X" can be calculated as follows :
X=(B+C)-(A+D+S)

[7] Select a shim (6) so as the clearance X to come to -0.08 mm (interference) - +0.02 mm (clearance) on this unit.

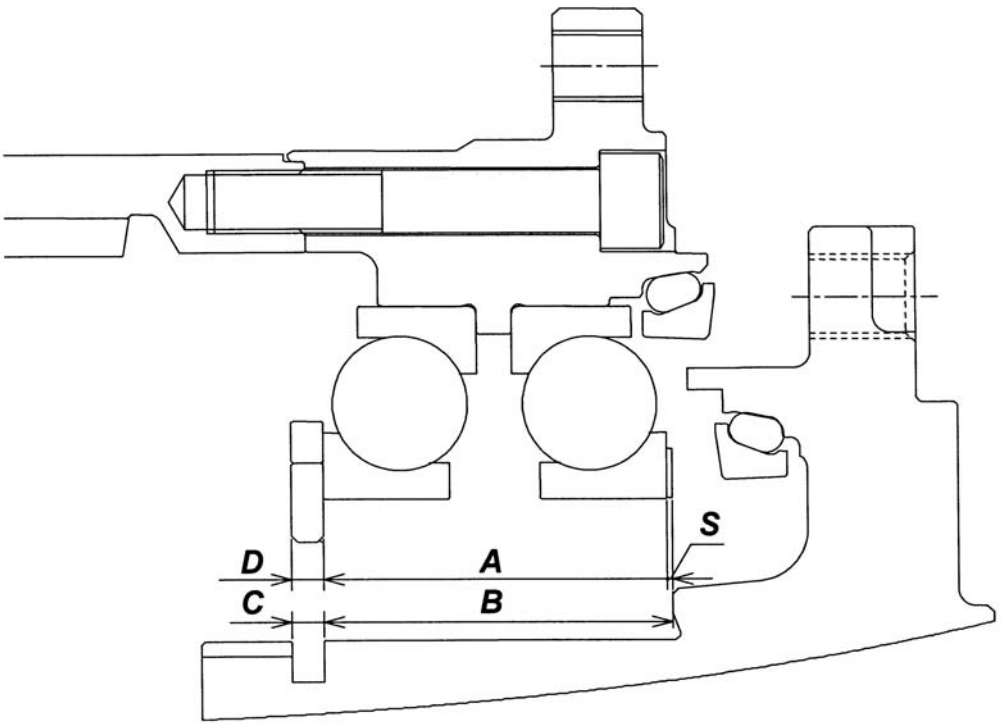

Figure 22. Deciding shim thickness

https://truckmanualshub.com/

f) Installing housing ASSY

[1] Place motor on work stand with the shaft upward, and put the selected shim (6) (Refer to Chapter 2.-(3) Item e) "Deciding shim thickness for angular bearing" on page 12/17) on the bearing mating surface of motor casing.

Take great care not to pinch your hand between parts while assembling nor let fall parts on your foot while lifting them.

Lift the parts up horizontally.

[2] Install three M10 eye bolts on ring gear (3) almost equally apart and lift it up. Descend it concentric with motor and put bearings (2) on housing (1) into motor casing. Use press machine and press inner lace of bearing (2) into full depth.

Take great care not to pinch your hand between parts while assembling nor let fall parts on your foot while lifting them.

Lift the parts up horizontally.

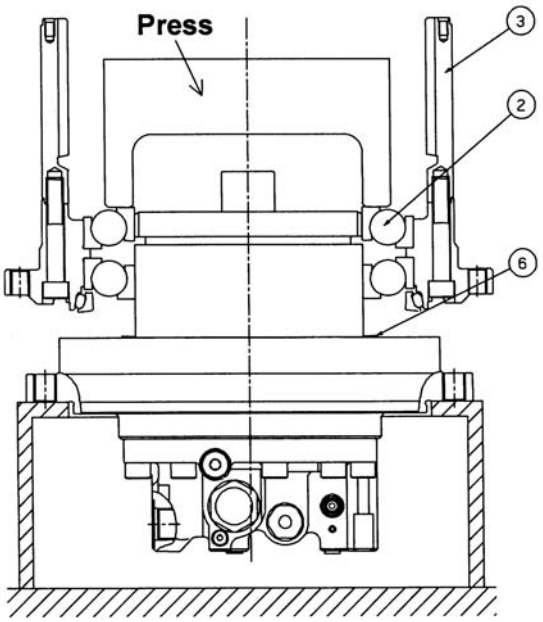

Figure 23. Pressing housing ASSY in

[3] While pressing inner lace of bearing (2), install lock washers (7) into groove.

Figure 24. Installing lock washer

[4] Install support ring (8) over outside of lock washers (7).

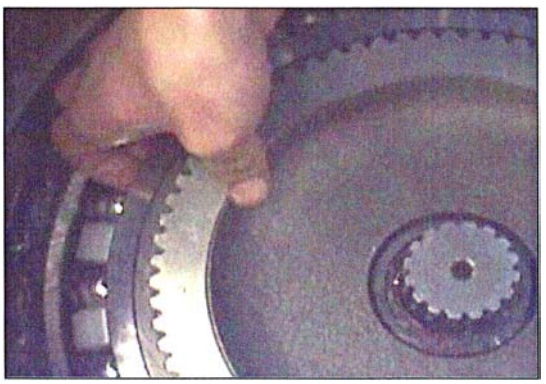

Figure 25. Installing support ring

https://truckmanualshub.com/

g) Assembling carrier 2 ASSY

[1] Install three M10 eye bolts equally apart on carrier 2 (9).
Using the eye bolts, hang the carrier 2 ASSY by wire rope and place three planetary gears 2 (10) as shown on Fig.27, put carrier 2 ass'y into ring gear (3) and mesh the splines to those of motor.

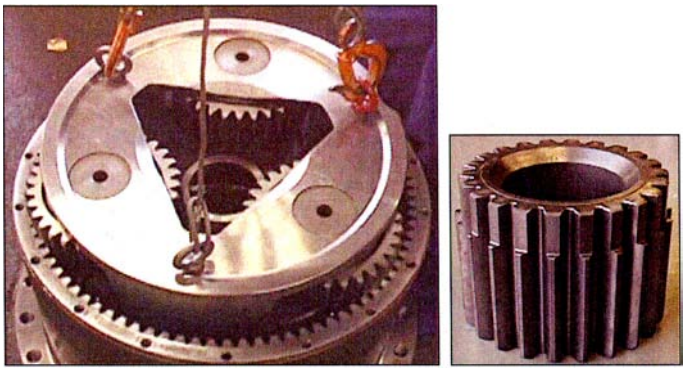

Figure 26. Assembling carrier 2 ASSY and sun gear 2

⚠ Take great care not to pinch your hand between parts while assembling nor let fall parts on your foot while lifting them.

⚠ Lift the parts up horizontally.

[2] Insert and mesh sun gear 2 (15) on center.

⚠ Take great care not to pinch your hand between gears while assembling.

※ Positioning carrier 2 ASSY as Fig.27 is important to obtain better lubrication.

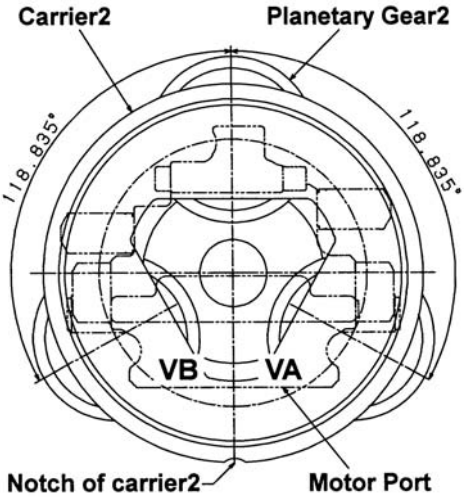

Figure 27. Installing direction of carrier 2

h) Assembling carrier 1 ASSY

[1] Install three M10 eye bolts equally apart on carrier 1 (16).
Using the eye bolts, hang the carrier 1 ass'y by wire rope and place it in ring gear (3), rotate planetary gears 1 (17) by hand and adjust carrier 1 (16) to mesh with sun gear 2 (15).

⚠ Take great care not to pinch your hand between parts while assembling nor let fall parts on your foot while lifting them.

⚠ Lift the parts up horizontally.

[2] Making sure that coupling (see motor manual) is on the shaft end, install sun gear 1 (22) on center.

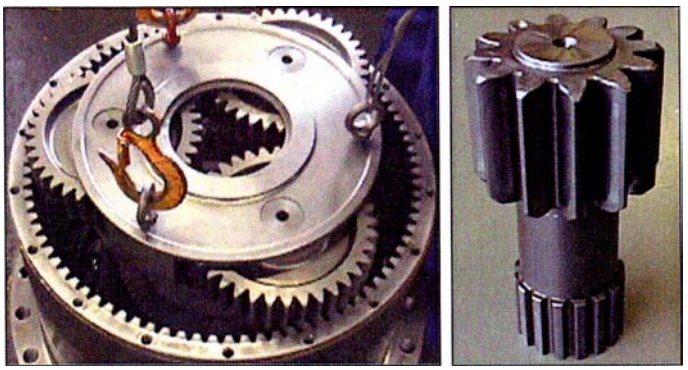

Figure 28. Assembling carrier 1 ass'y and sun gear 1

⚠ Take great care not to pinch your hand between gears while assembling.

https://truckmanualshub.com/

[3] Place thrust plate (23) on carrier 1 (16).

※ Face sharp edged side to cover (24). (See Fig.30)

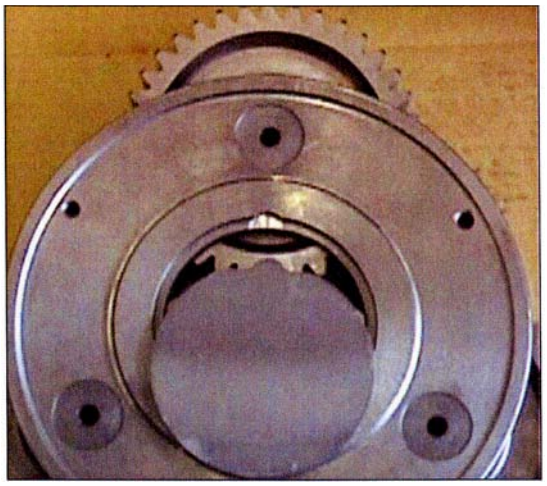

Figure 29. Assembling thrust plate

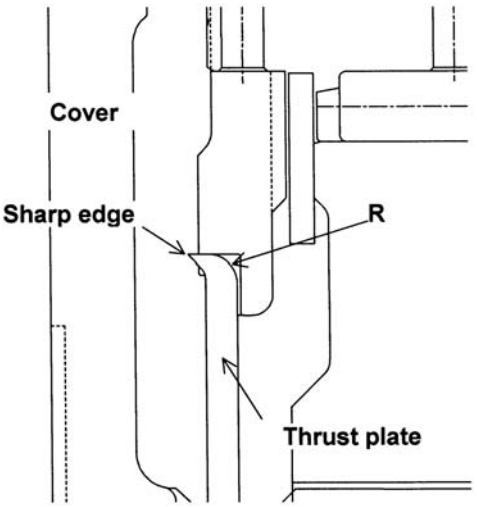

Figure 30. Installing direction of thrust pla

i) Installing cover

※ Gear oil can be filled before installing cover (24) if you can measure prescribed volume of oil.

[1] Apply Loctite #515 on mating surfaces of cover (24) and ring gear (3) and install cover (24) on ring gear (3).

⚠ Take great care not to pinch your hand between parts while assembling nor let fall parts on your foot while lifting them.

[2] After applying Loctite #242 on the threads of 18 pieces of Hex. socket head bolts M10 x 30 (25), tighten them with torque wrench.

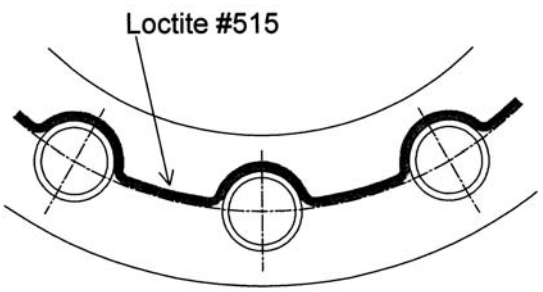

Figure 31. Applying Loctite #515 on mating surface of cover

※ Refer to Fig.21 "How to apply Loctite #242".

※ Tightening torque of Hex. socket head bolt M10 x 30 (25) is 68.6 ±6.9N-m without removing rust preventive agent on the threads.

j) Filling gear oil

[1] Fill gear oil (SAE #90 API class GL-4 or GL-5, 9.5 litters) from two G3/4 ports.

[2] Tighten taper screw plugs (26).

※ Tightening torque of taper screw plug (26) is 147.1 ± 14.7N-m.

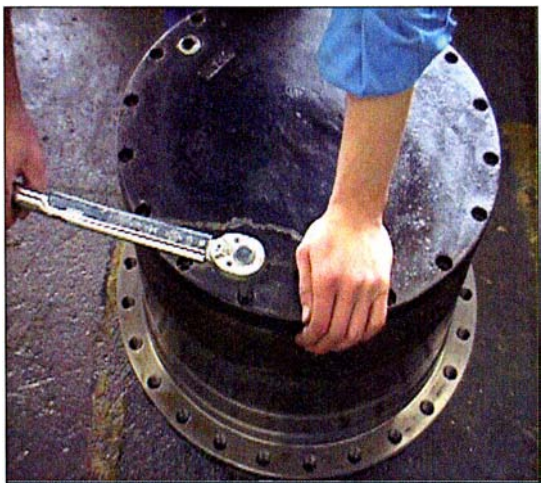

Figure 32. Tightening bolts of cover

https://truckmanualshub.com/

3. Maintenance

(1) PREPARATION PRIOR TO ASSEMBLING

a) Thrust washer

[1] Check if there are seizure, abnormal wear or uneven wear.

[2] Check if the wear is over the allowable limit.

b) Gears

[1] Check if there are pitting or seizure on the tooth surface.

[2] Check if there are clacks on the root of tooth by die check.

c) Bearings

Rotate by hand to see if there are something unusual such as noise or uneven rotation.

d) Floating seal

Check flaw or score on sliding surfaces or on O-rings.

(2) PARTS MAINTENANCE

The followings are the general maintenance standards. However, it is most important to determine which parts should be replaced, depending on the characteristics shown before disassembling, damages or discoloration of exterior view, the purpose of disassembling, the expected remaining service life etc..

The parts applying maintenance standards

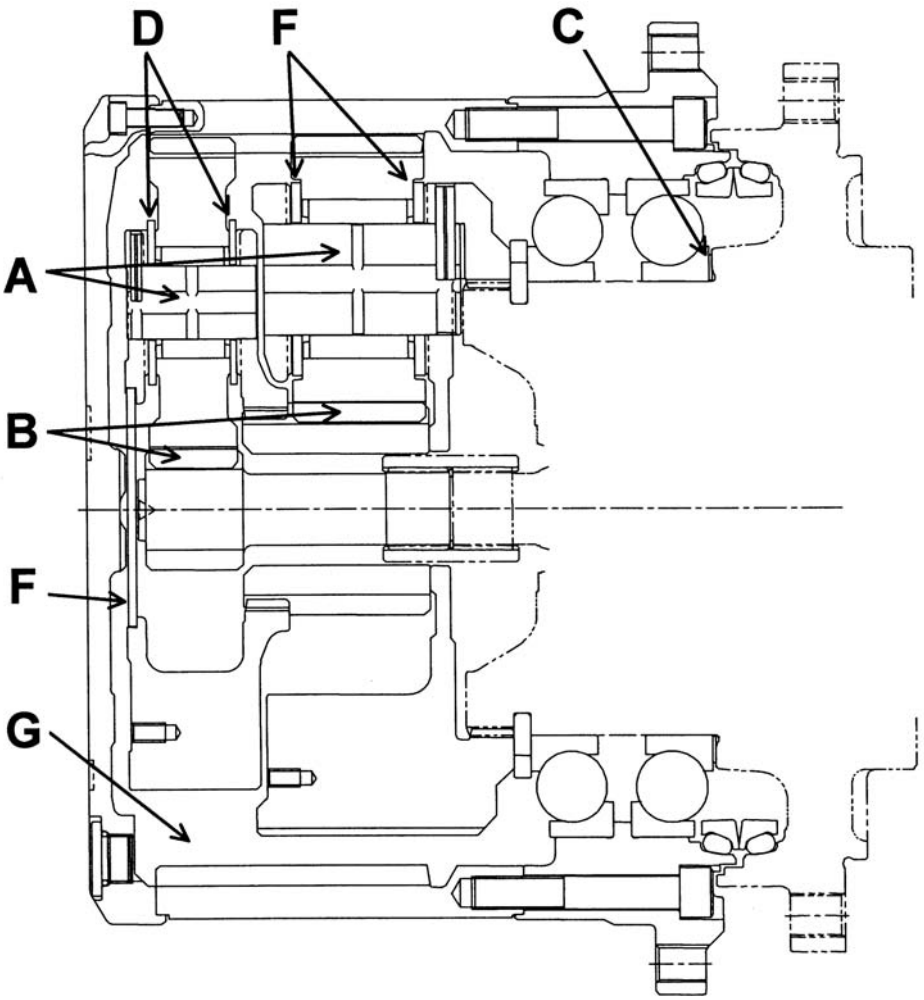

https://truckmanualshub.com/

Refer to marks on drawing on front page.

MARK	ITEMS	Criteria	Allowable Limit	Disposition
A	Wear of planetary shaft	Smooth, without abnormal wear or seizure	←	Replace 3 pieces as a set
B	Condition of tooth surface	Smooth, without abnormal wear or seizure	Not over 1.6 mm of pitching nor cracks at root	Replace (Replace 3 pieces as a set for planetary gears)
C	Thrust clearance of angular bearings (2)	From -0.08 mm To 0.02 mm	←	Adjust shim thickness (Refer to 2.-(3)-e))
D	Thickness of thrust washer 1(18)	From 3.3 mm To 3.7 mm	0.1 mm of wear	Replace
E	Thickness of thrust washer 2(11)	From 5.3 mm To 5.7 mm	0.1 mm of wear	Replace
F	Thickness of thrust plate (23)	From 4.34 mm To 4.66 mm	0.15 mm of wear	Replace
G	Lubrication oil	2,000 working hours (engine hour meter)		Replace

(3) TIGHTENING TORQUE

Use torque wrench when tightening the following Hex. socket head bolts and plugs.

ITEM	DESCRIPTION	SIZE	TIGHTNING TORQUE (N-m)
(4)	Hex. socket head bolt	M18x110	402 ± 39.2 (with applying Loctite #242)
(25)	Hex. socket head bolt	M10x30	68.6 ± 6.8 (with applying Loctite #242)
(26)	Taper plug	G3/4	147 ± 14.7

(4) PREPARATION AFTER ASSEMBLED

a) Quantity of lubrication

After installed the propelling unit, position the drain port at lowest position and check if lubrication oil comes out when loosen the level plug.

b) Rotating inspection

Put the unit on the test stand and rotate with no load and check if there are abnormal noise or leak of oil.

Take care not to overspeed the motor. Rotate within specified flow rate.

https://truckmanualshub.com/

Introduction

Introduction

Appropriate operations, maintenance, inspections, troubleshooting, and repair of the machine are vital to keep it performing at its best and for the longest possible period of time, and to prevent it from breaking down.
This document includes a General Outline, Specifications (Performance), Troubleshooting and Disassembly/maintenance instructions, which are necessary for inspection, troubleshooting and repair of the machine.
(Note: This Shop Manual is to be filed with the additional information to be added later.)
For details of the engine, refer to the maintenance manual published by the engine manufacturer.
For daily inspections and maintenance, see the Operator's Manual to take advantage of the machine's full performance.
Numerical values or others may be changed without notice due to design alterations or other reasons.

https://truckmanualshub.com/

Motor Maintenance

1. Troubleshooting

Described below are measures to be taken when any abnormalities or malfunctions are found while the hydraulic motor is used.
Details on disassembling/inspection and reassembling are also described later but careful handling is absolutely needed to avoid any damage to the sliding parts of the motor while conducting these procedures.

Table 1

Symptom	Cause	Exterior inspection	Remedy	Repairs
Does not rotate	Motor's internal breakage	Measure drain output.	If motor supply input is equal to the drain output, there is high possibility of breakage in sliding section. Disassembling/inspection is required.	See Table 2.
	Motor's internal breakage	Open the inlet and outlet ports on the motor and apply pilot pressure of 2.9 to 4.9 MPa to the brake relief port. Then attempt to rotate the output shaft with torque of 30 to 40 N・m.	If the output shaft does not rotate smoothly with the torque stated to the left, there is high possibility of internal breakage. Disassembling/inspection is required.	Replace damaged parts or motor assembly.
	Incorrect settings at relief valve in the circuit	Measure load pressure with pressure gauge.	Reset to specified set pressure.	
Excessive slippage	Wear or damage in the sliding part of the motor and in the high pressure seal section	Measure drain output.	If the drain output is more than 2.5 L / min., the leakage is too high. Disassembling/inspection is required.	See Table 2.
	Oil temperature is too high and there is excessive internal leakage inside the motor	Measure oil temperature.	Lower the oil temperature.	
Lack of torque Abnormal noises	Wear or seizure of the motor sliding section	Open the inlet and outlet ports on the motor and apply pilot pressure of 2.9 to 4.9 MPa to the brake relief port. Then attempt to rotate the output shaft with a torque of approx. 30 to 40 N・m.	If the output shaft does not rotate smoothly with the torque stated to the left, there is high possibility of internal breakage. Disassembling/inspection is required.	Inspect parts (a) to (e) listed in Table 2, and also the bearings. Change them if any abnormality is found.
	Incorrect settings at relief valve in the circuit	Measure load pressure with pressure gauge.	Reset to specified set pressure.	

https://truckmanualshub.com/

Symptom	Cause	Exterior inspection	Remedy	Repairs
Lack of torque Abnormal noises (cont.)	Motor's internal breakage	Check whether there are any foreign metal substances in the motor oil drain and drain filters.	If any foreign metal substances are found, there is high possibility of motor's internal breakage. Disassembling/inspection is required.	Repair or replace damaged parts. Motor assembly replacement.
	A lot of air is mixed in the oil	Check the oil in the tank and motor case.	Bleed air completely.	
	Looseness on tightening sections	Looseness on piping fixtures. Check for looseness on the fixture mounting bolts, motor mounting bolts and bolts on the motor.	Fasten them with proper tightening torque.	
Abnormal heat	Seizure of motor's sliding and rotating sections	Check for foreign metal substances in the motor oil drain and drain filters. Apply pilot pressure of 2.9 to 4.9 MPa to the brake relief port and attempt to rotate the output shaft with torque of 30 to 40 N²m.	If any foreign metal substances are found or the output shaft does not rotate smoothly with the torque above, there is a high possibility of internal breakage. Disassembling/inspection is required.	Repair or replace damaged parts. Motor assembly replacement.
Oil leakage from mating faces	O-ring is damaged.			Replace O-rings.
	Oil seal surface is damaged.			Repair or replace seal surfaces.
	Loose bolts	Check for loose bolts.	Fasten them with proper tightening torque.	
Oil leakage from oil seal.	Wear or damage on the lips of oil seal			Replace oil seal.
	Wear or damage on seal sections of shaft			Repair or replace motor assembly.
	Abnormal pressure in the case	Check the internal pressure and drain output in the case.	Internal pressure in the case should be 0.3 MPa or less. If drain output is too large, disassembly/inspection is required.	Replace oil seal. Repair or replace damaged parts. Motor assembly replacement.

https://truckmanualshub.com/

Table 2

Letter	Parts to be inspected	Repairs
a	Wear in the sliding part of balance plate (24)	Repair or replace parts.
b	Damage in the sliding section of the cam plate (7)	Repair parts or replace the motor.
c	Damage in the sliding section of the piston assembly (9)	Repair parts or replace the motor.
d	Wear in piston outer diameter of the piston assembly (9)	Repair parts or replace the motor.
e	Wear in piston hole of the cylinder (27)	Replace motor.
f	Damage in Teflon ring (17)	Replace parts.

https://truckmanualshub.com/

2. Maintenance Reference Table

Table 1

Part name	Locations to be inspected and measured	Reference valves (tolerance limits)	Measuring instruments	Instructions for repair and remedies
Piston assembly (9)	Roughness on shoe sliding face	0.8 S	Surface roughness gauge	Repair with paper lap.
	Groove depth in shoe sliding section	0.45 mm or more	Micrometer	Replace with new ones.
	Looseness on the ball joint section between piston and shoe	0.4 mm or less	Dial gauge	Replace with new ones.
	Piston diameter	Almost no wear. If scratches or seizure are found, replace with new ones.		
Cam plate (7)	Surface roughness	0.8 S	Surface roughness gauge	Lap
Cylinder (27)	Roughness on the edge	0.4 S	Surface roughness gauge	Lap
	Piston hole	Almost no wear. If scratches or seizure are found, replace the motor.		
Balance plate (24)	Surface roughness	0.8 S	Surface roughness gauge	Lap
Piston assembly (9) Cylinder (27)	Clearance between piston diameter and cylinder bore	0.04 mm or less	Micrometer Air micrometer	Motor replacement

Table 2

Part name	Inspection and Maintenance Reference
Taper roller bearing (4) Needle bearing (25)	Replace bearings with new ones every 3,000 hours even if they function normally. Additionally, always replace bearings when reassembling, even if it's within 3,000 hours.
Oil seal (3)	If damage is found on the lip, replace it with a new one. Additionally, replace seals with new ones every 3,000 hours even if they function normally with no leaking. Additionally, always replace seals when reassembling, even if it's within 3,000 hours.
O-rings (12), (14), (20), (31), (32), (33) and (38)	If damage is found on O-ring, replace it with a new one. Additionally, replace rings with new ones every 3,000 hours even if they function normally with no leaking. Additionally, always replace rings when reassembling, even if it's within 3,000 hours.
Backup rings (30) and (34)	Always replace rings when reassembling.

https://truckmanualshub.com/

3. Disassembling Instructions

(1) Removing relief assembly and others

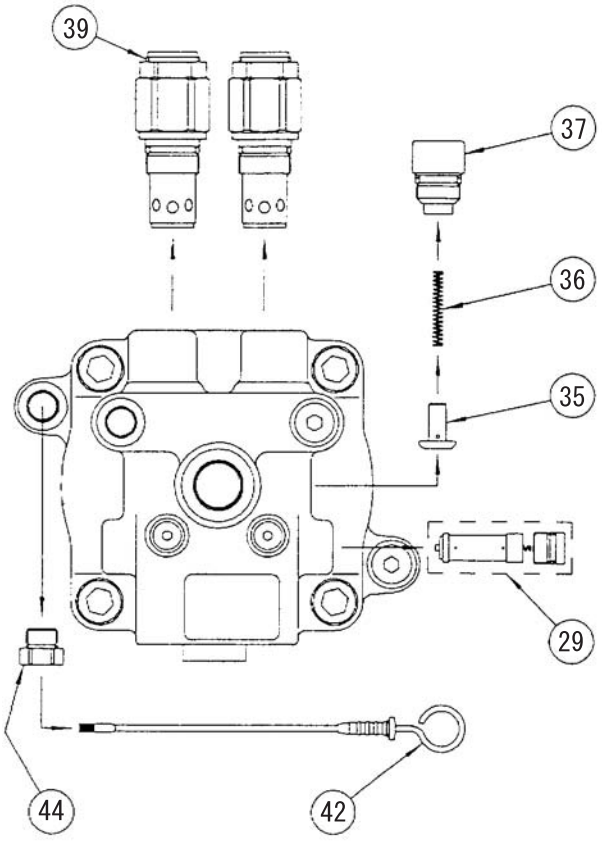

Remove the relief assemblies (39) (WAF 46), caps (37) (WAF 14), springs (36), checks (35), and by-pass valve assemblies (29) (WAF10), level gauge (42) and cap (44) (WAF 27), which are attached to the main motor body.

※ Always install the relief assemblies (39), caps (37), springs (36), checks (35), and bypass valve assemblies (29) into their original locations when reassembling them.

(2) Place counter marks on the mating faces of the motor.

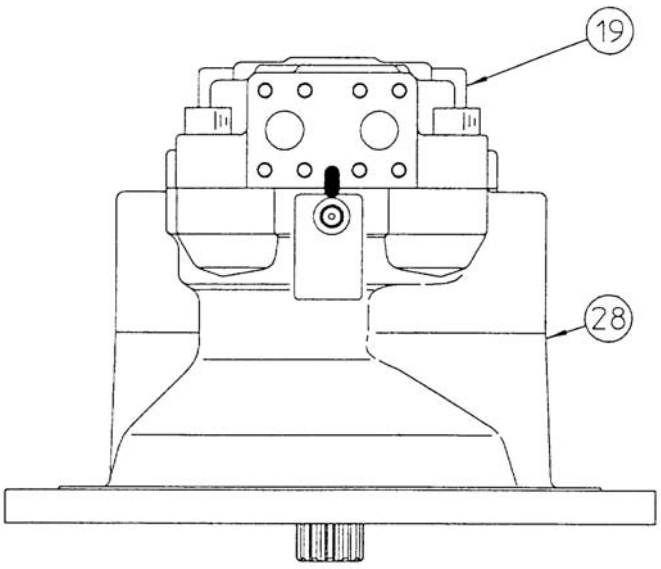

It is useful for reassembly to place counter marks on the mating faces of the cover (19) and housing (28) using paint or an equivalent.

https://truckmanualshub.com/

(3) Loosening tightening bolts

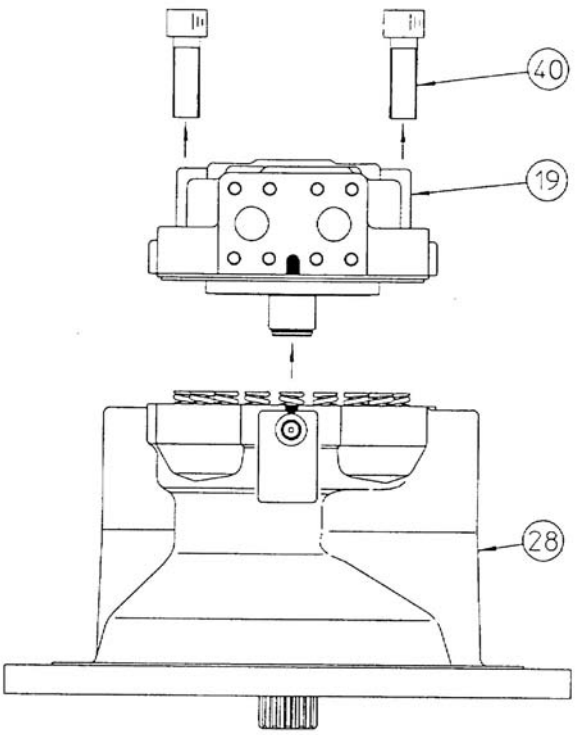

Loosen the socket head bolts (40) (WAF 17) and remove the cover (19) by lifting it while placing it with the motor output shaft facing downward.

(4) Removing inner rings

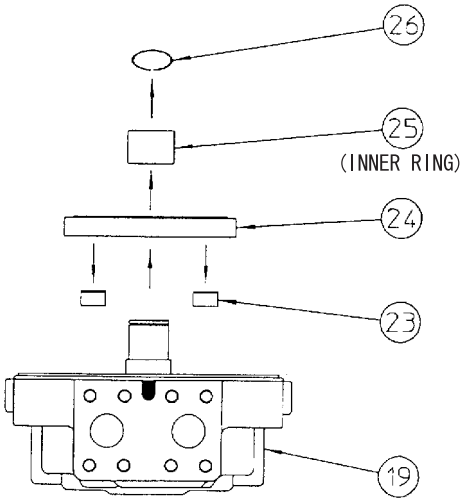

Remove the snap ring (26) using a scriber and take out the inner ring of needle bearing (25) and balance place (24).
Then, take out the pistons (23) from the balance plate (24).

※ Careful handling is needed to avoid damage or deformation by excessive force to the sliding surface of the balance plate (24).

※ The balance plate (24) has its own assembling direction with the cover (19). It is wise to put marks on the plate to tell the assembling direction with the cover (19) when reassembling.

https://truckmanualshub.com/

(5) Removing O-rings

Remove the O-ring (14) from the cover (19).

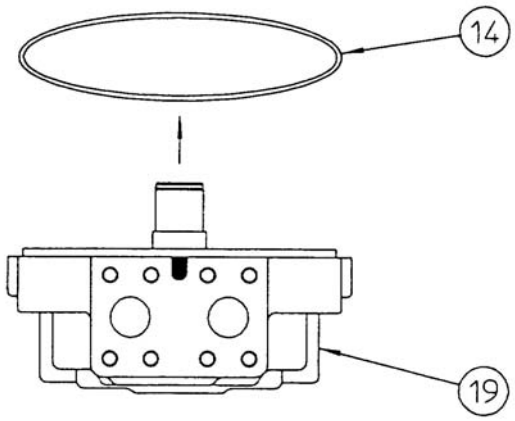

(6) Removing bushings

Remove the bushings (16) with Teflon rings (17) and scrowaves (18) from the cover (19).

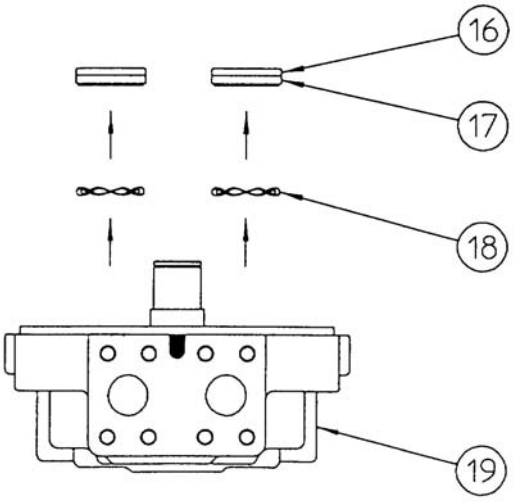

https://truckmanualshub.com/

(7) Removing springs

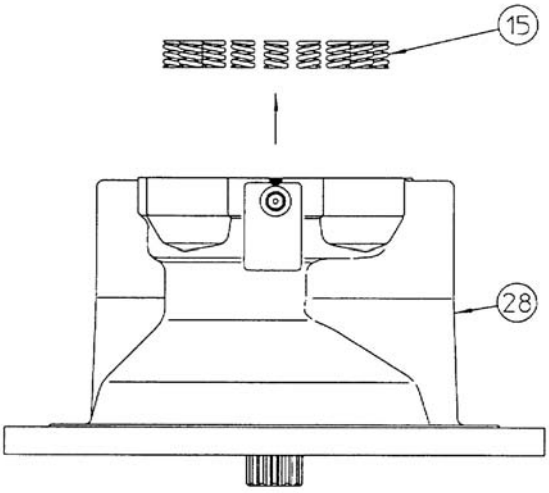

Remove the springs (15) from the piston (13) in the brake section.

※ Measures should be taken to easily find out the assembling position of the springs (15) onto the piston (13).

(8) Removing piston in the brake section

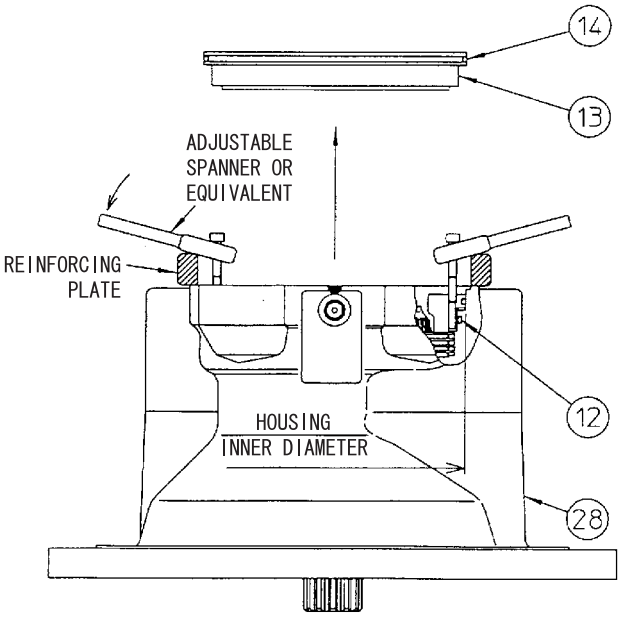

It can be difficult to withdraw the piston (13) from the housing (28) because of sliding resistance caused by the interference of the O-rings (12), (14). Therefore, it is recommended that the piston be taken out (as shown in the left drawing) by using the tap holes (M6) provided on the piston (13).
Then, take out the O-ring (12) from the housing (28) and the O-ring (14) from the piston (13).

※ Place the reinforcing plate at the outer side from the inner diameter of the housing (28).

https://truckmanualshub.com/

(9) Removing friction and counterpart plates

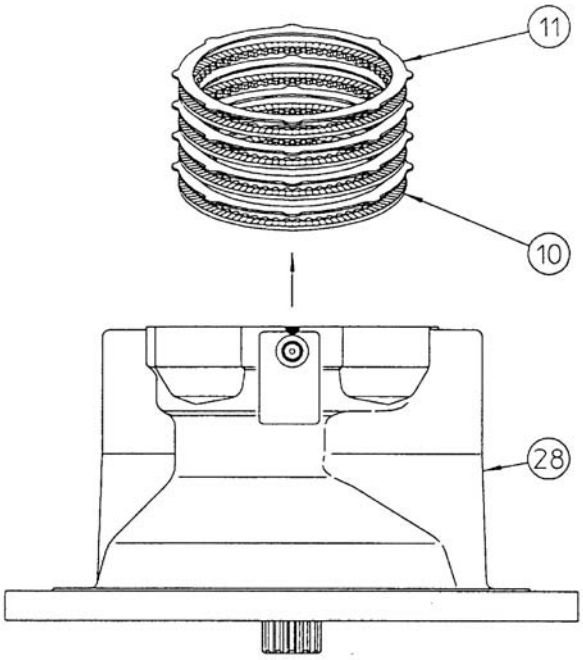

Remove the friction plates (10) and the counterpart plates (11).

(10) Removing cylinder assembly

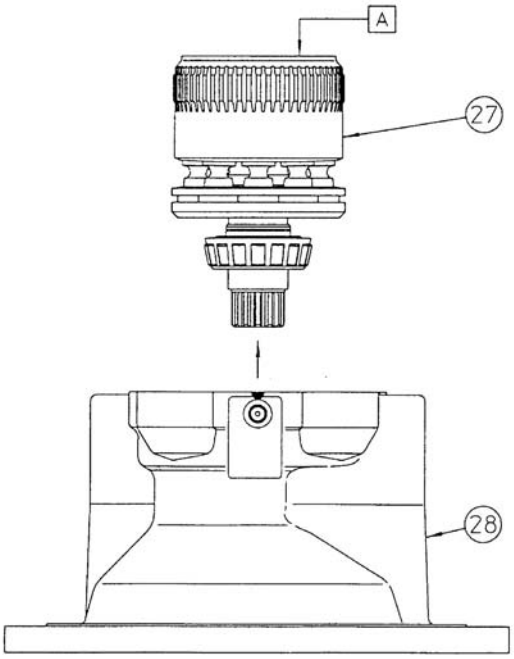

Grasp the end part of the cylinder (27) and draw out the cylinder assembly from the housing (28).

※ Special attention should be taken not to drop the cylinder (27). It will be slippery with oil.

※ At this stage, only the outer ring of the taper roller bearing (4) and the oil seal (3) remain in the housing (28).

※ Protect the end section (A) of the cylinder (27) with a soft cloth or equivalent to avoid scratches on its sliding surface.

※ Place counter marks or numbers on the piston hole and piston assemblies (9) of the cylinder (27) so that the piston assemblies can be reassembled into the same original hole.

https://truckmanualshub.com/

(11)Removing outer rings of taper roller bearing

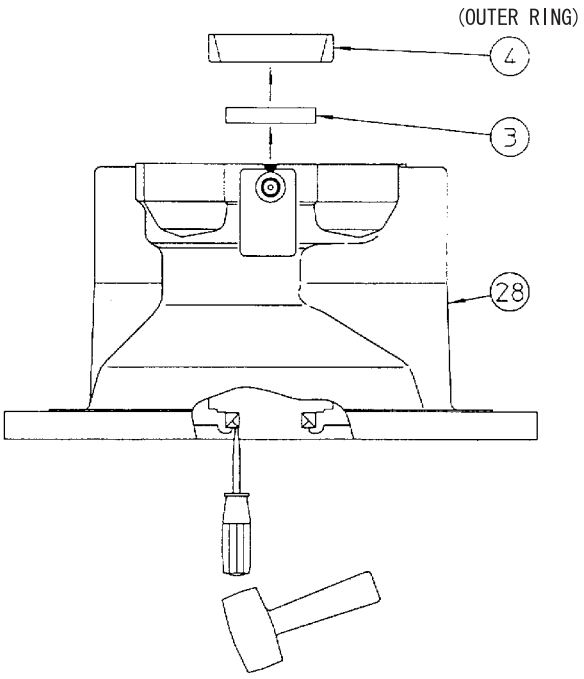

Remove the outer ring of the taper roller bearing (4) from the housing (28). Then, pull out the oil seal (3) by tapping it with a screwdriver and hammer.

※ Do not reuse the oil seal (3).

(12)Disassembling the cylinder assembly

1) Withdrawing inner rings and taper roller bearings

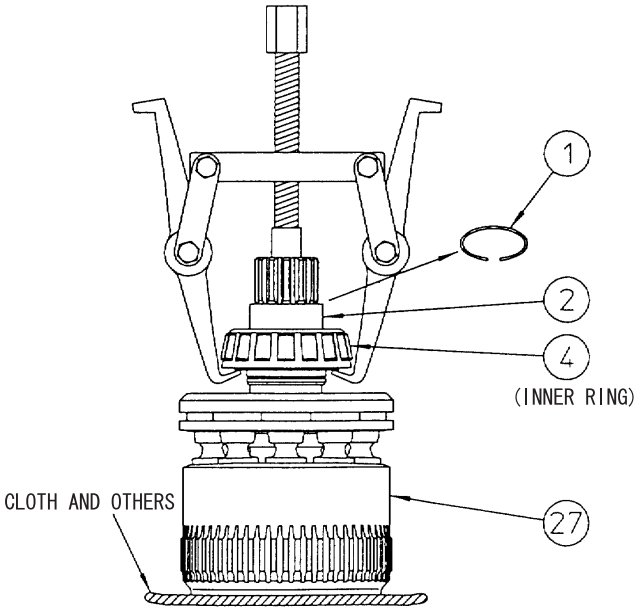

Remove the snap ring (1) using a scriber and put a gear puller over two locations on the inner rings of the taper roller bearing (4) and the end part on the spline of cylinder (27). Pull them out together with the inner ring (2).

https://truckmanualshub.com/

2)

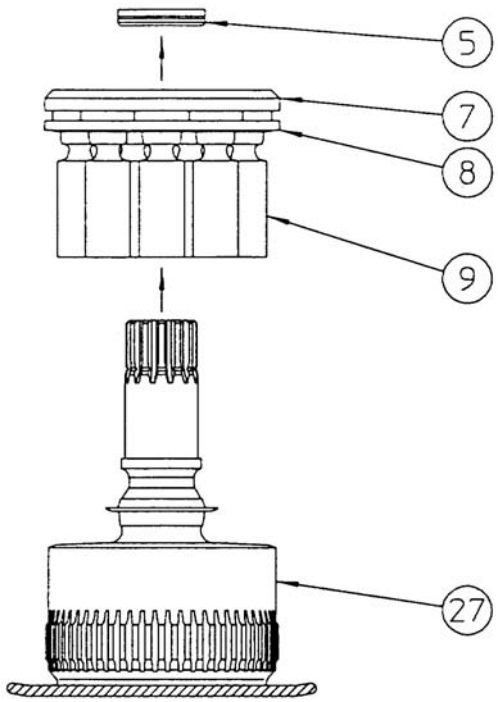

Pull the collar (5) out of the cylinder (27).
Withdraw the cam plate (7), return plate (8) and piston assemblies (9) all together from the cylinder (27).

3)

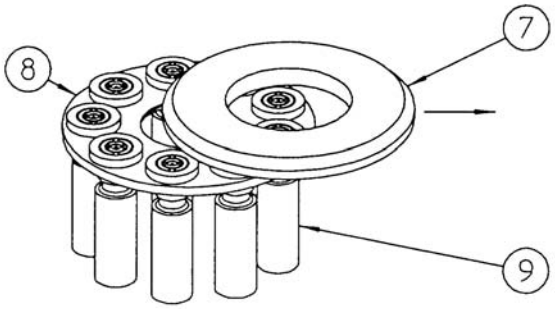

Take out the cam plate (7) by sliding it on the sliding surface of the piston assemblies (9).

※ Careful handling is required to prevent damage to the sliding surfaces on the cam plate (7) and piston assemblies (9).

https://truckmanualshub.com/

4)

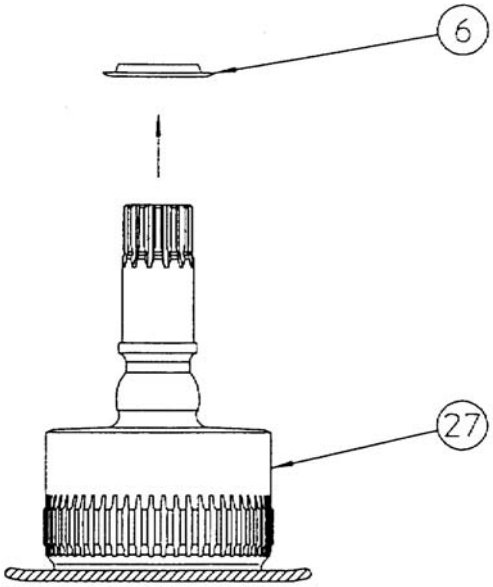

Withdraw the backing spring (6) from the cylinder (27).

Now the disassembly has been completed.

https://truckmanualshub.com/

4. Assembling Instructions

(1) Preparations

1)

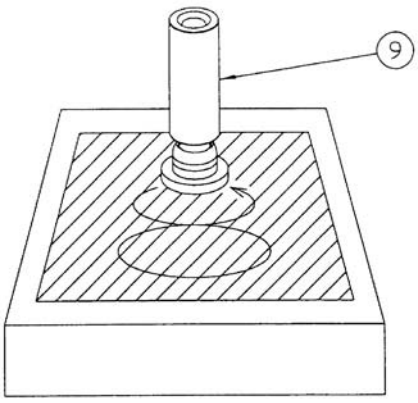

Prior to assembling, carry out the following preparations:
Check each part for scratches caused by use or disassembling; if scratch is present, remove the scratch using oil stones or sand papers (with appropriate grains), as necessary. Then, wash it with clean-treated oil and air-dry it.

2)

※ Replace seal parts with new ones.

3)

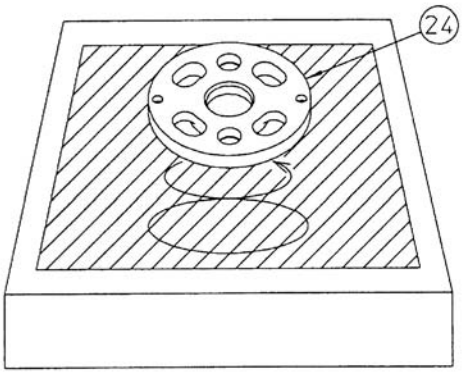

Polish sliding surfaces of the piston assembly (9), cam plate (7), and balance plate (24) on a surface plate using no. 2000 papers.

4)

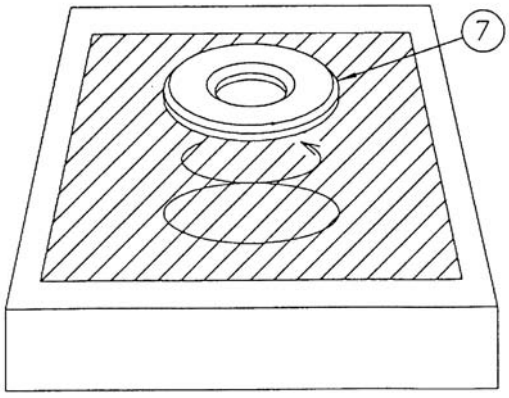

Apply clean hydraulic oil to the sliding parts when they are ready for assembly.

https://truckmanualshub.com/

(2) Assembling cylinder assembly

1)

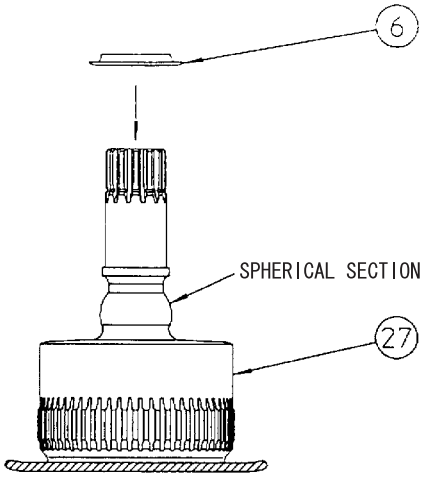

Apply hydraulic oil to the spherical section [contact part with backing spring (6)] in the cylinder (27) and install the backing spring (6).

2)

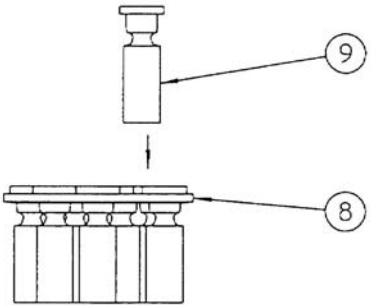

Insert the piston assemblies (9) into the hole in the return plate (8).

3)

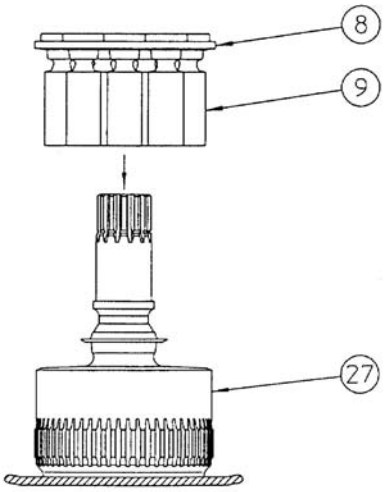

Install the piston assemblies (9) and return plate (8) together onto the cylinder (27).

※ At this time, install the piston assemblies (9) into the same hole in which it was installed before disassembly.

Apply hydraulic oil to the piston holes of the cylinder (27) when installing.

https://truckmanualshub.com/

4)

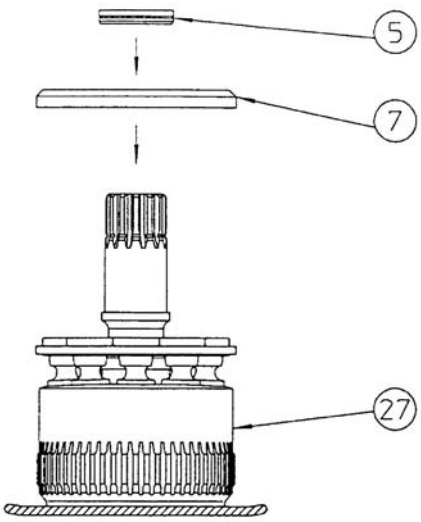

Apply hydraulic oil to the sliding faces of the shoe in the piston assemblies (9), and install the cam plate (7) on the cylinder (27).

Install the collar (5) onto the cylinder (27).

5)

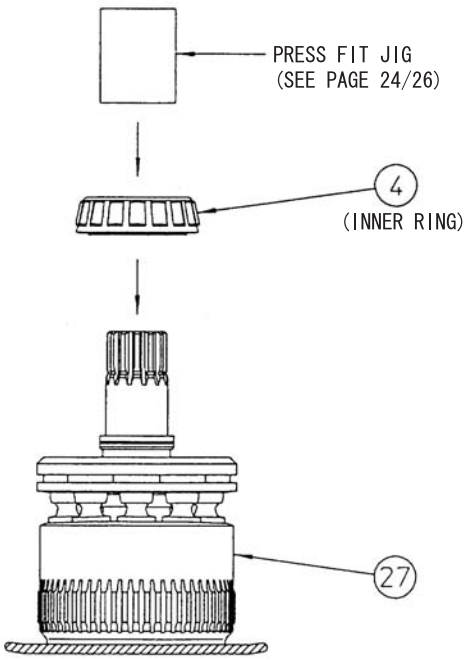

Install the inner ring of the taper roller bearing (4) into the cylinder (27) with a hand press or press fit jig.

※ A piece of soft cloth or equivalent should be used to protect the end face of the cylinder (27) from damage while press fitting.

https://truckmanualshub.com/

6)

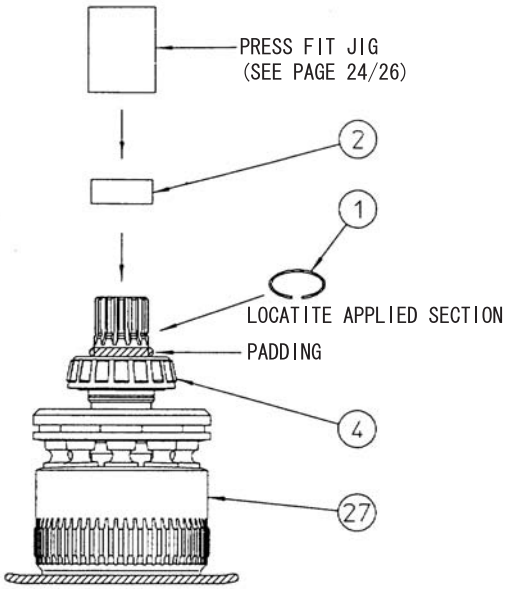

Clean the area on which the inner ring for the cylinder (27) is to be installed, and apply a thin coat of sealing material (Loctite nos. 515, 518 or equivalent) to it after degreasing. Then, install cleaned and degreased inner ring (2) onto the cylinder using press fit jig. Finally, install the snap ring (1).

※ Careful handling is needed to prevent sealing materials from sticking onto the roller of the taper roller bearing (4).

※ Completely wipe off the sealing materials extruding from the gap between the inner ring (2) and taper roller bearing (4).

(3) Installing oil seals

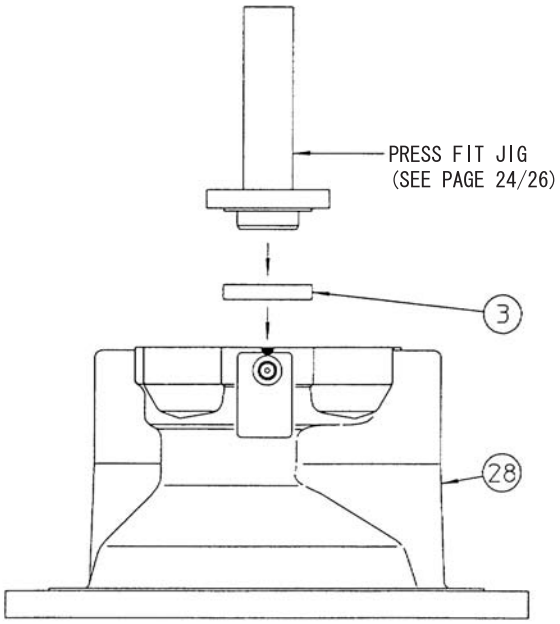

Clean and degrease the section of the housing (28) onto which the oil seal are to be installed.
Then, degrease the outer surface of the oil seal (3) and apply liquid packing (ThreeBond 1211 White or equivalent). Then, install it onto the housing (28) using the press fit jig.

※ Pay attention to the fitting directions of the oil seal (3).

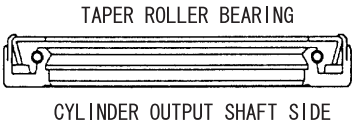

https://truckmanualshub.com/

(4) Installing outer ring of the taper roller bearing

Install the outer ring of the taper roller bearing (4) onto the housing (28).

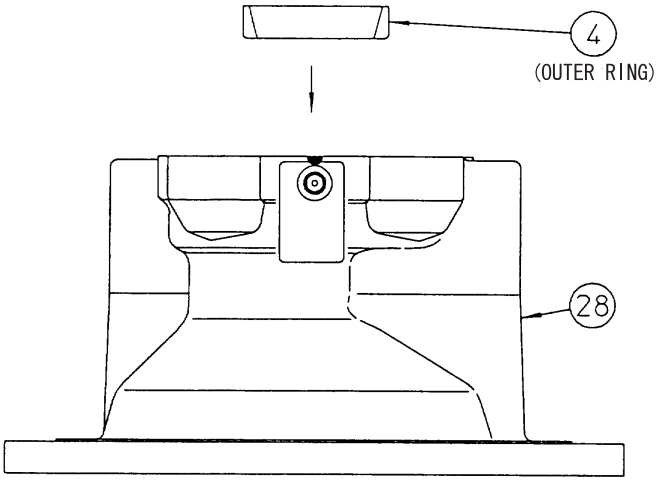

(5) Installing cylinder assembly

Apply a thin coat of grease to the lip surface of the oil seal (3) and slowly install the cylinder (27) into the housing (28) while holding the end faces of the cylinder (27). At this time, use seal protectors together with them on the spline section of the cylinder (27).

When installing the cylinder assembly, make sure that the backing spring (6) is seated firmly in the counter bore section of the return plate (8).

※ When installing the cylinder assembly, the spline shaft of the cylinder (27) will come out of the end face of the housing (28). Place 30 to 50 mm thick padding under the lower surface of the housing (28).

Ensure that the end of the cylinder (27) is approximately 15.3 mm lower than the housing (28). A lesser amount of sinking indicates that the cam plate (7) is not seated properly in the counter bore section of the housing (28). Carefully place the housing horizontally with its higher slope surface down and shake the cylinder (27) slightly up and down to seat the cam plate (7) in place.

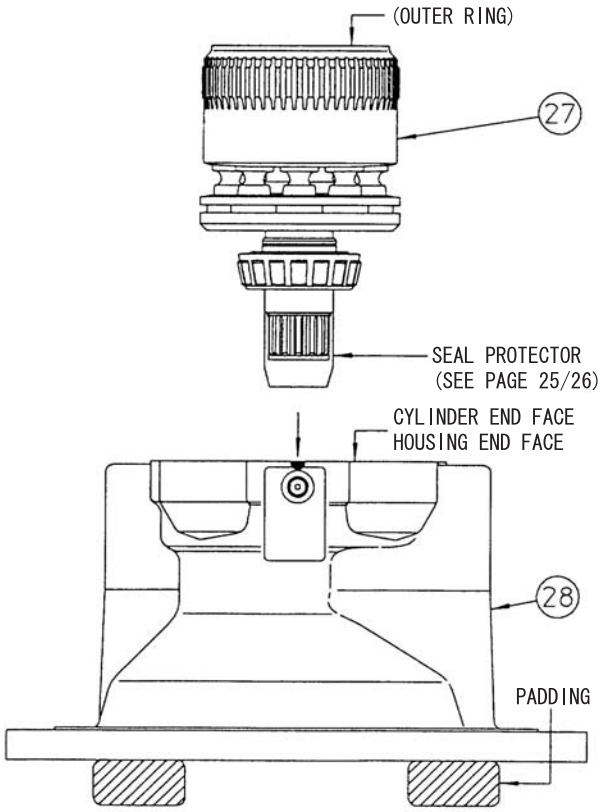

https://truckmanualshub.com/

(6) Installing friction plates and counterpart plates

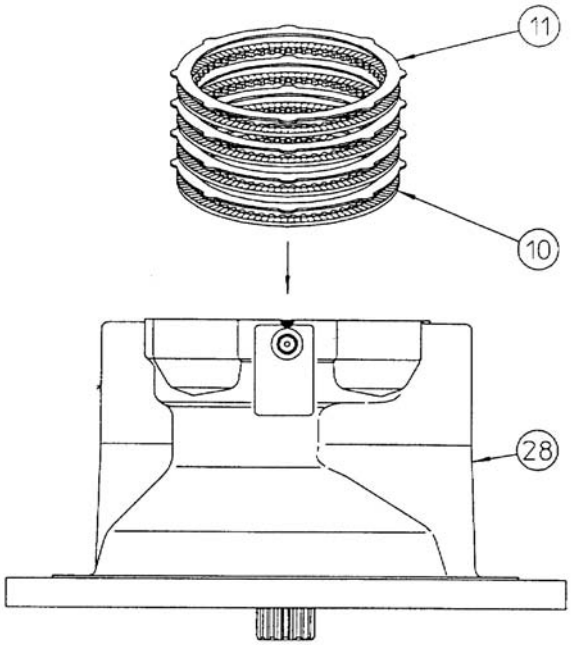

Install the friction plates (10) and counterpart plates (11).

Apply hydraulic oil to both sides of each plate.

(7) Installing O-rings

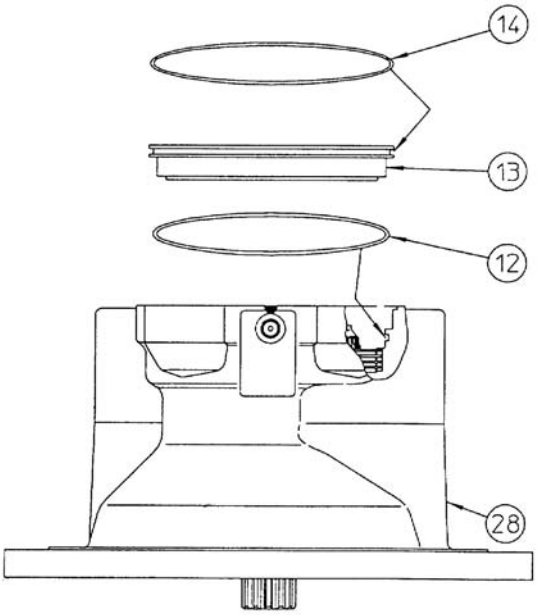

Install an O-ring (12) onto the housing (28) and another O-ring (14) onto the piston (13).

Apply grease to O-rings (12), (14).

https://truckmanualshub.com/

(8) Assembling brake pistons

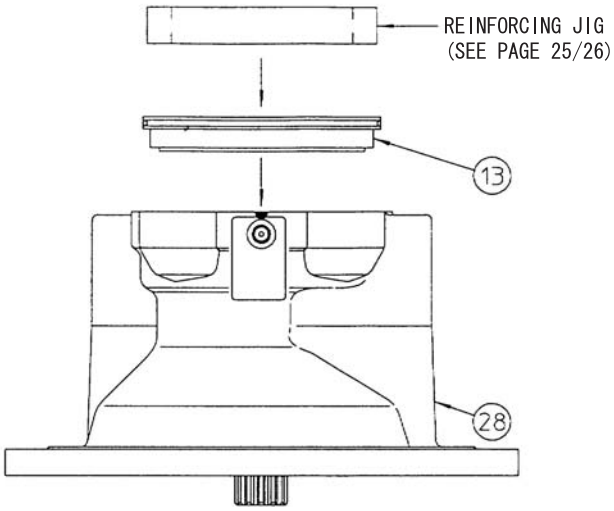

Apply hydraulic oil to the outer sliding surface section of the piston (13) and install the piston onto the housing (28).

※ Press the piston (13) while placing the whole piston level because it is hard to install due to the piston's interference with O-rings (12), (14).

(9) Installing springs

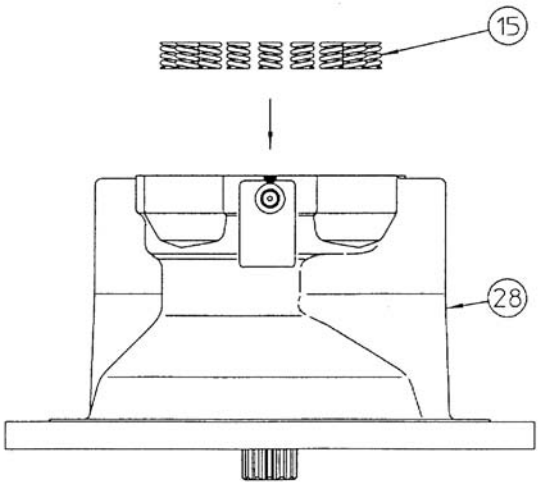

Install the springs (15) into the piston (13) in the brake section.

※ Install the springs (15) into the same location before disassembly.

https://truckmanualshub.com/

(10)Assembling balance plates

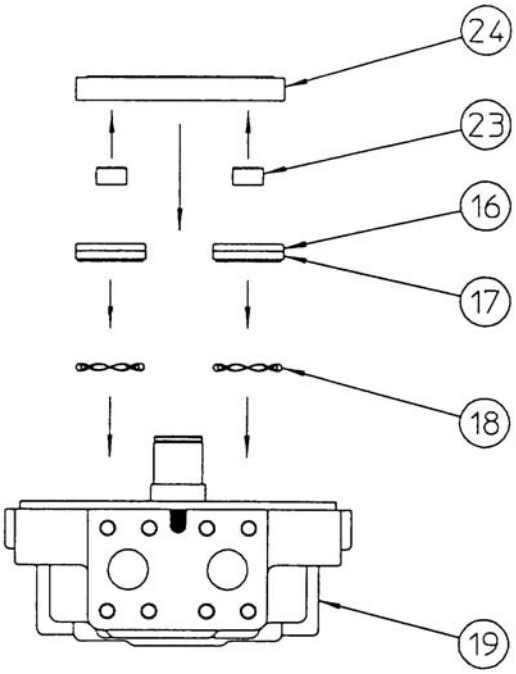

Install the bushings (16) with a teflon rings (17) and scrowaves (18) into the bushing hole on the cover (19).
Install the balance plate (24) integrated with the piston (23) onto the cover (19).

※ Pay attention to the installation directions for the balance plate (24) and cover (19), which were marked before disassembly.

Apply plenty of grease to the pistons (23) and pins (22) for the cover (19) (rotation stopper for the balance plate) and install the balance plate on the cover side.

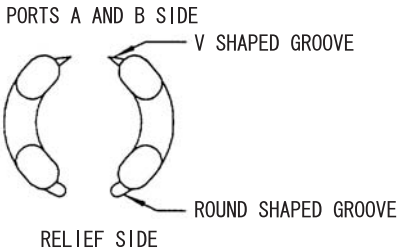

(11)Assembling inner ring

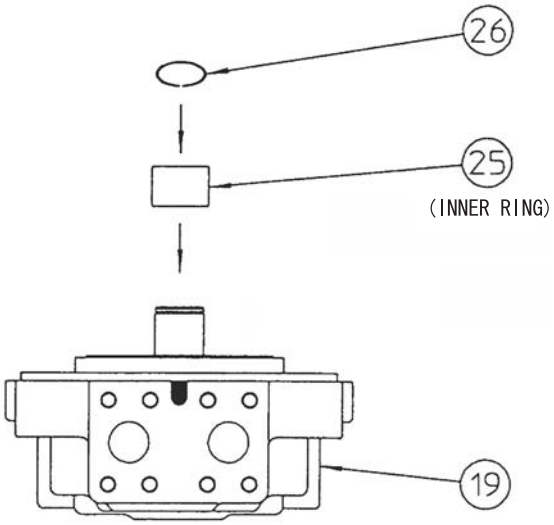

Press fit the inner ring for the needle bearing (25) onto the cover (19) and install the snap ring (26).

https://truckmanualshub.com/

(12)Installing O-rings

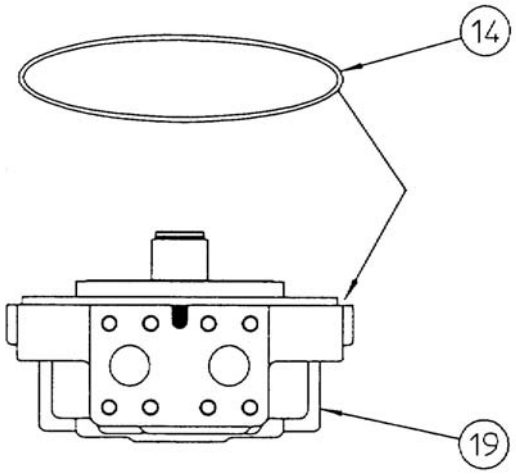

Install the O-ring (14) onto the cover (19).

Apply grease to the O-ring (14).

(13)Applying liquid packing

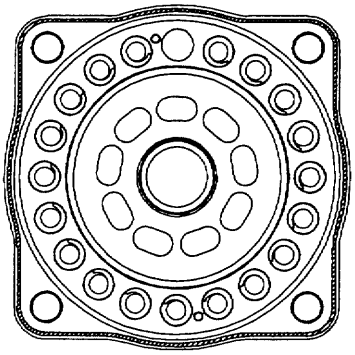

LIQUID PACKING APPLIED AREA

Clean and degrease the mating faces of the housing (28) and the cover (19), and then apply liquid packing (ThreeBond 1211 White or equivalent) to them as shown in the left Figure.

https://truckmanualshub.com/

(14)Installing covers

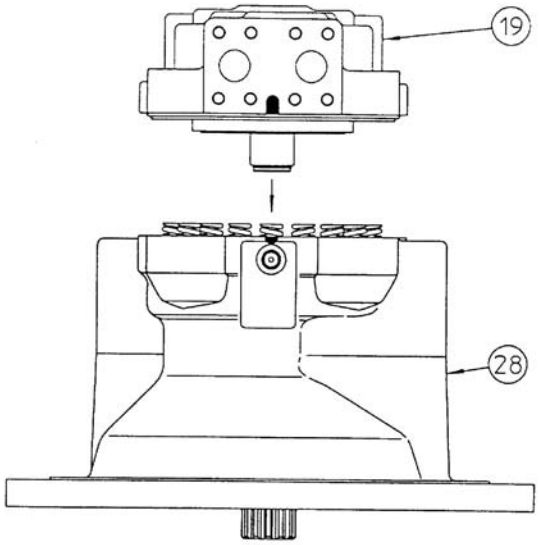

Clean and degrease the faces of the cover (19) to be mated with the housing (28), and then lift the cover (19) to install into the housing (28).

※ Match the positions of counter marks which were made on the housing (28) and the cover (19) before disassembly.

※ At this point, there is an approximately 4 mm gap between the housing (28) and the cover (19).

(15)Tightening bolts

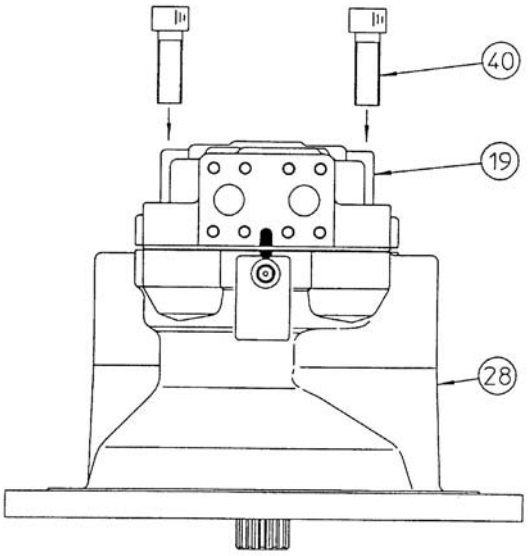

(Tighten the cover (19) to the housing (28)) Fasten socket head bolts (40) (WAF 17) with tightening torque of 392 N・m.

※ In order to install housing (28) and cover (19) straight, tighten 4 bolts (40) evenly, alternating from one bolt to the other until reaching recommended torque.

https://truckmanualshub.com/

(16)Assembling relief assembly and others

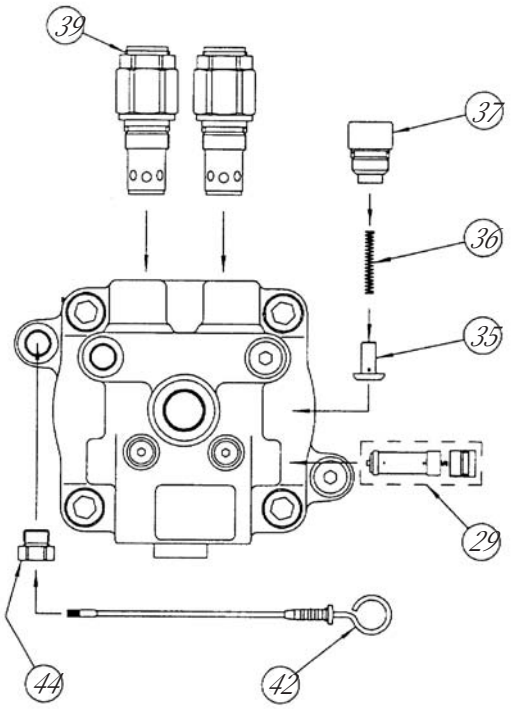

Install the relief assemblies (39) (WAF: 46) onto the cover (19) with tightening torque of 137 N・m. Install the checks (35) and springs (36) onto the cover (19), and fasten the caps (37) (WAF 14) onto the cover (19) with tightening torque of 137 N・m. Then install the bypass valve assemblies (29) (WAF 10) onto the cover (19) with tightening torque of 78 N・m. Finally, install the cap (44) (WAF 27) onto the housing (28) with tightening torque of 49 N・m, and insert a level gauge (42).

※ Always install the relief assemblies (39), caps (37), springs (36), checks (35) and bypass valve assemblies (29) into their original locations.

(17)Verifying installation

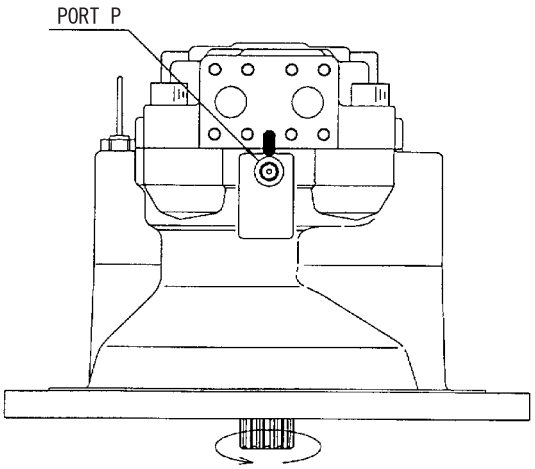

Open the entry and exit ports and apply pilot pressure of 2.9 to 4.9 MPa to the brake relief port. Then make sure that the output shaft can be smoothly rotated, one turn or more, with torque of 30 to 40 N・m. If it does not rotate properly, it is suspected that assembly is not completed correctly. Disassemble once again and readjust it. Make sure that drain port is released.
Now the assembling procedure has been completed.

※ Ensure that the set pressure on the relief valves (39) indicates a normal pressure after the hydraulic motor is installed onto this machine.

https://truckmanualshub.com/

Press fitting jig for inner ring (2) and taper roller bearing (4)

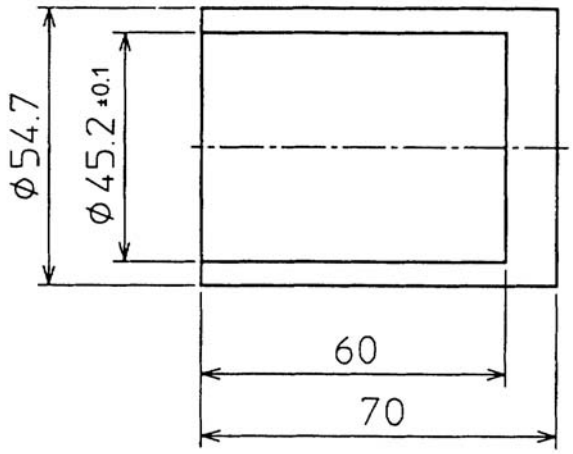

Installation jig for oil seal (3)

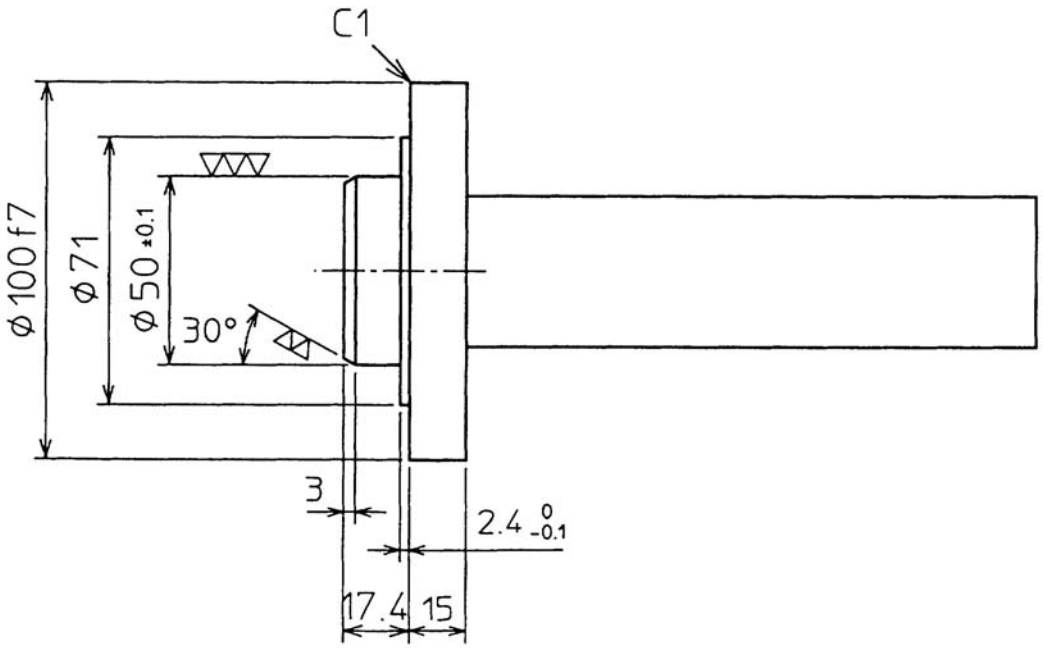

https://truckmanualshub.com/

Seal protector

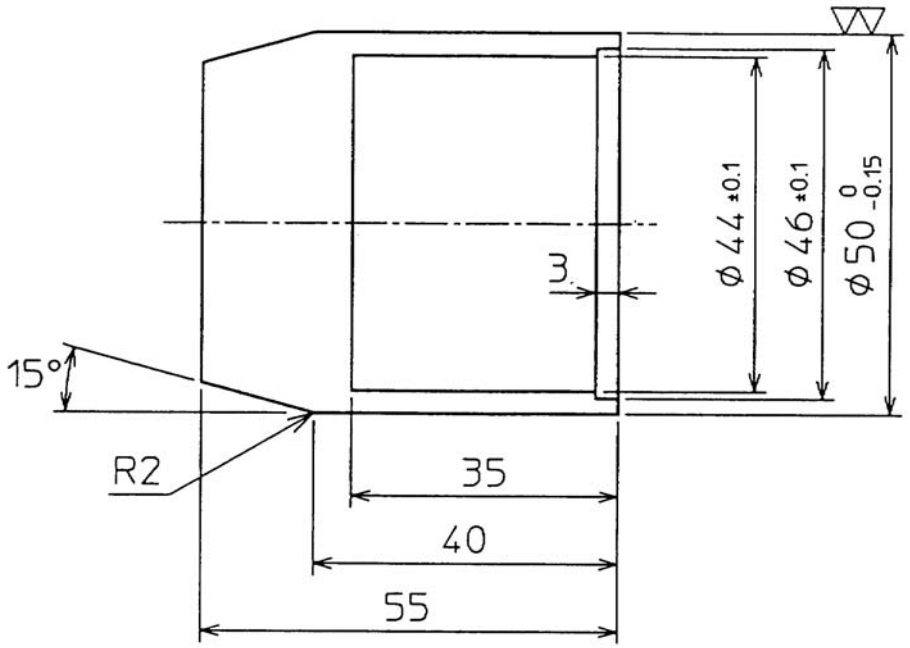

Installation jig for brake piston (13)

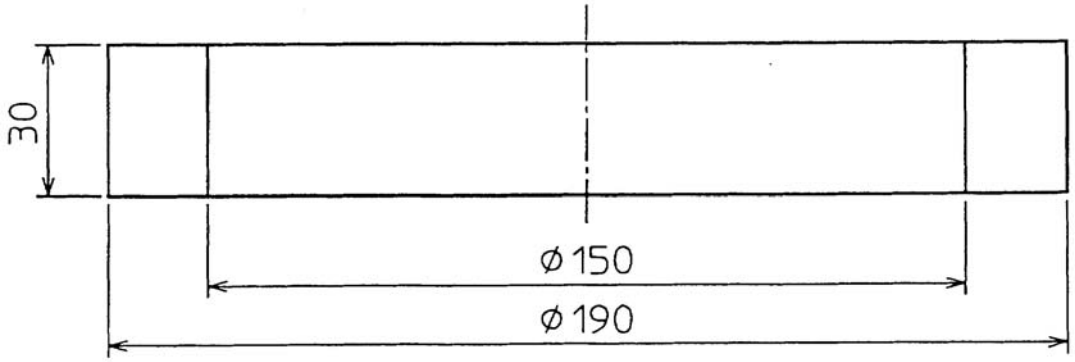

https://truckmanualshub.com/

Internal Structural Drawing

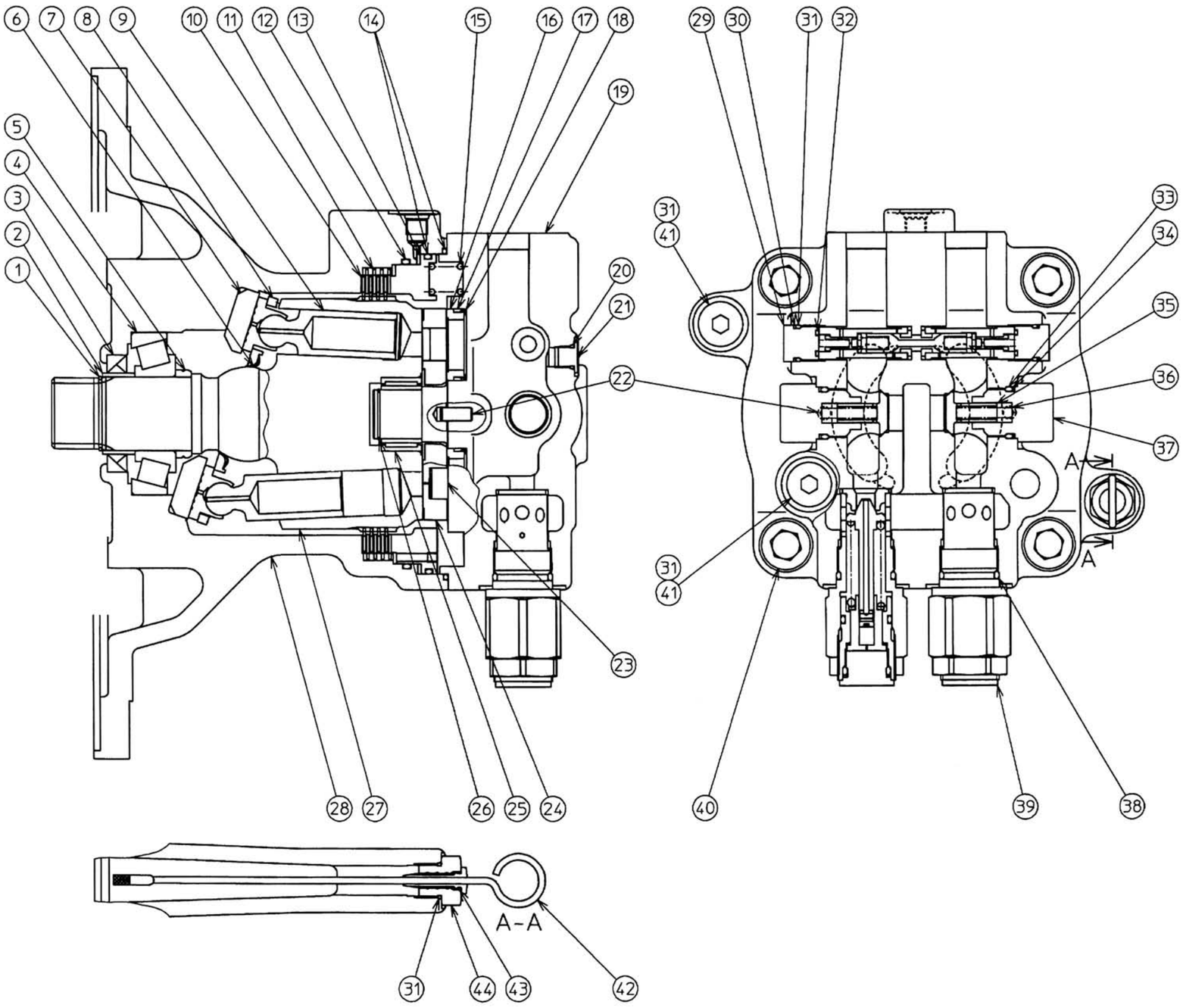

No.	PART NAME	QTY
1	SNAP RING	1
2	INNER RING	1
3	OIL SEAL	1
4	TAPERD ROLLER BEARING	1
5	COLLAR	1
6	BACKING SPRING	1
7	CAM PLATE	1
8	RETURN PLATE	1
9	PISTON ASSY	9
10	LINING PLATE	4
11	PLATE	4
12	O-RING	1
13	PISTON	1
14	O-RING	2
15	SPRING	19
16	BUSH	4
17	TEFLON RING	4
18	SCROWAVE	4
19	COVER	1
20	O-RING	2
21	CAP	2
22	PARALLEL PIN	2
23	PISTON	2
24	BALANCE PLATE	1
25	NEEDLE BEARING	1
26	SNAP RING	1
27	CYLINDER	1
28	HOUSING	1
29	BYPASS VALVE ASSY	2
30	BACK-UP RING	2
31	O-RING	5
32	O-RING	2
33	O-RING	2
34	BACK-UP RING	2
35	CHECK	2
36	SPRING	2
37	CAP	2
38	O-RING	2
39	RELIEF ASSY	2
40	HEXAGON SOCKET BOLT	4
41	CAP	2
42	LEVEL GAUGE ASSY	1
43	O-RING	1
44	CAP	1

https://truckmanualshub.com/

Reduction Gears Maintenance

1. Assembling Instructions

(1) Assembling Case Subassembly

1) Assembling carrier No. 1 subassembly

※ Since those parts are to be crimped, they cannot be reassembled. Careful assembly is essential.

[1] Insert planetary gear No. 1 (26) and side plate No. 1 (28) (one plate) sequentially into planetary pin No. 1 (27) (Photo 1).

[2] Place planetary carrier No. 1 (25) on the jig with the inner tooth gear counterbore facing up.

※ [3] Press fit planetary pin No. 1 (27) so the notch on the flange section faces the circumference of outer side of planetary carrier No. 1 (25) (Photo 2). The engagement of side plate No. 1 (28) must be closely monitored here. Leave the subassembly for 5 to 6 seconds with the press fitting force applied, then release the pressure and remove from jig. Never use a hammer to hit into the subassembly. This will result in damage because it galls the planetary carrier bore and reduces the holding strength of a pin.

[4] Turn over the Carrier No. 1 Subassembly (Photo 3).
Crimp in the following steps: Rotate the planetary gear No. 1 (26) manually to check there is no rotational irregularity or engagement.

PHOTO 1

PHOTO 2

PHOTO 3

[5] Crimp by opening the end of planetary pin (No. 1) (27) with crimping jig (Photo 4) (Photo 5).
Crimping may produce string-like chips. Eliminate all if this happens.

[6] Rotate planetary gear No. 1 (26) manually to check again that there is no engagement or rotational irregularity. If found, reassemble using new parts (Photo 6).

PHOTO 4

PHOTO 5

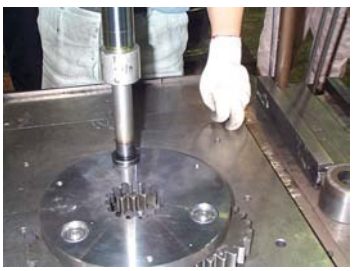

PHOTO 6

Repeat steps (1) through (6) above on other 3 locations to finish the procedure.

https://truckmanualshub.com/

2) Assembling carrier No. 2 subassembly

[1] Slide planetary gear No. 2 (30) and side plate No. 2 (32) from the side of planetary carrier No. 2 (29) to place in the proper location (Photo 7).

[2] Insert planetary pin No. 2 (31) through the upper pin hole of planetary carrier No. 2 (29). The spring pin insertion holes on planetary pin No. 2 (31) and planetary carrier No. 2 (29) (see Step 3) must be oriented properly (Photo 8).

PHOTO 7

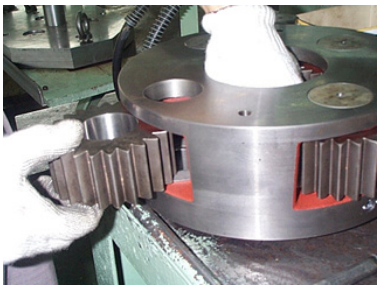

PHOTO 8

[3] Ensure that the spring pin insertion holes on planetary carrier No. 2 (29) and planetary pin No. 2 (31) are aligned. Drive the spring pin (10x40) (33) with the jig (see Photo 9), monitoring the orientation (marked surface upward) and the depth (1 mm). After the pin is driven in, crimp by deforming the spring pin hole: hammer approx. 1 mm from the spring pin hole using a punch (See Photo 10).

[4] Rotate planetary gear No. 2 (30) manually to check there is no engagement or rotational irregularity (See Photo 11). If found, refer to 2. Disassembling Carrier No. 2 Subassembly (Page 8/10) to first disassemble, then reassemble according to the instructions in 1-2 on this page.
A new spring pin (33) must be used in reassembly. (Reusing the spring pin that has gone through disassembly may reduce the holding force which could lead to breakage.)

PHOTO 9

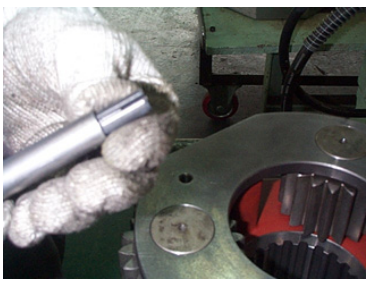

PHOTO 10

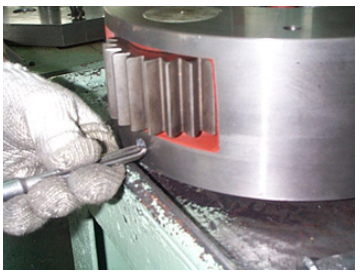

PHOTO 11

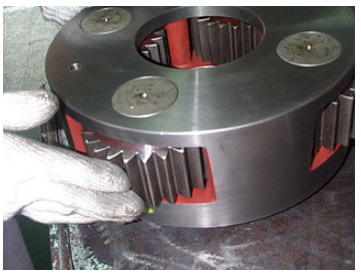

Repeat steps (1) through (4) above on other 4 locations to finish the procedure.

https://truckmanualshub.com/

3) Assembling shaft subassembly

This section describes the assembling of subassembly through shrinkage fit.

[1] Use a bearing heater and heat the roller bearing (16) (Photo 12) and the pipe spacer (19) (Photo 13) to approximately 50×C higher than the outside temperature. Since the roller bearing (16) is made of resin, use caution to avoid deforming from overheating. (The temperature must be below 120×C.)

[2] Place the gear shaft (20) on a workbench. The end surface with the two tapped areas should be facing up (Photo 14).

[3] Watch the upward/downward orientation and insert the pipe spacer (15) (Photo 14).

[4] Remove the roller bearing (16) from the bearing heater, then insert (Photo 14).

PHOTO 12

PHOTO 13

PHOTO 14

[5] Once the temperature of the roller bearing (16) reaches the outside air temperature range, apply grease (KHP1406) to the inside of roller bearing (16) (Photo 15).

[6] Watch the upward/downward orientation and insert the bearing cover (17) (Photo 16).

※ [7] Remove pipe spacer (19) from the bearing heater and insert observing the upward/ downward orientation (Photo 16).

[8] Once the temperature of the pipe spacer (19) reaches the outside air temperature range, turn over and apply grease to the inside of the roller bearing (16) (Photo 15). Add an additional mound of grease as well (Photo 17).

PHOTO 15

PHOTO 16

PHOTO 17

https://truckmanualshub.com/

4) Assembling the case subassembly

[1] Place gear case (8) upside down (with larger flange upward) on the surface plate (Photo 18).

[2] Use the lifting tap holes (M16, 2 locations) on the gear shaft (20) to lift the shaft subassembly (1-3) with a crane and place it into the gear case (8) (Photo 18).

[3] Install the wire (18). Ensure that the shaft subassembly (1-3) is installed securely. Insecure fitting may lead to dislodging of the shaft subassembly (1-3), which could cause damage to the subassembly (Photo 19).

PHOTO 18

PHOTO 19

[4] Turn over the case subassembly and place on the jig. Use caution to prevent the shaft end from hitting the ground. (It may cause the shaft to fall out.)

[5] Apply liquid packing (KSC0189: ThreeBond 1208B) (13) (Photo 20) to the outer circumference of the oil seal (12). Then, press fit using the jig. Apply a thin coat of lithium grease to lubricate the lip seal and press fit carefully to avoid damage to the lips (Photo 21).

PHOTO 20

PHOTO 21

[6] Watch the upward/downward orientation and insert the pipe spacer (10) (Photo 22).

PHOTO 22

https://truckmanualshub.com/

[7] Press fit roller bearing (9) onto gear case (8) using a jig (Photo 23).

[8] Punch the knock pins (7) on 4 locations (Photo 24).

[9] Degrease the end surface of gear case (8) and apply a uniform coat of liquid packing (KTH0086: ThreeBond 1215) (22) (Photo 24).

PHOTO 23

PHOTO 24

[10] Watch the upward/downward orientation, as well as the knock pins (7) positions, and install the ring gear (6). Fasten with 3 jig bolts (M20x200, hexagon socket head bolts) and 3 spacers (outer dia. = 27.2, inner dia. = 21.6, height = 20) (Photo 25).

[11] Screw the plugs with nylon seals (11), (14) onto the drain port on the gear case (8) side (Photo 26).

PHOTO 25

PHOTO 26

https://truckmanualshub.com/

(2) Assembling the Swing Reduction Gears

[1] Place the case subassembly (1-4) on the jig.

[2] Use the lifting taps (M10, 2 locations) on the planetary carrier No. 2 (29) to lift and place the carrier No. 2 subassembly (1-2) with a crane on the case subassembly (1-4) (See Photo 27). Rotating the carrier a little will facilitate the assembly.

[3] Insert the sun gear No. 2 (5) (Photo 28).

PHOTO 27

PHOTO 28

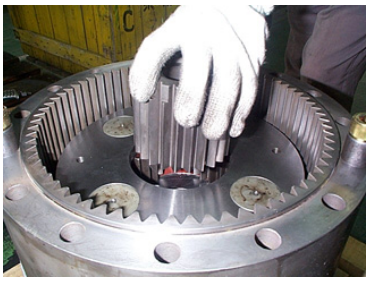

[4] Insert the thrust plate (2) into the sun gear No.2 (5) on the end surface (Photo 29).

[5] Insert the carrier No. 1 subassembly (1-1) (Photo 30).

PHOTO 29

PHOTO 30

[6] Watch the upward/downward orientation and insert the sun gear No. 1 (1) carefully (Photo 31).

PHOTO 31

https://truckmanualshub.com/

[7] Make sure that the distance between the end surface of the sun gear No.1 (1) and the ring gear (6) is 1.04 to 3.70 mm [i.e. (1) is lower than (6)] (Photo 32). If the distance falls short of reaching 1.04 mm:

- Gear shaft (20) and the roller bearing (16) are dislocated.
- The roller bearing (9) is not inserted completely.
- Foreign substances are engaged.

If the distance is larger than 3.70 mm:

- The wire (18) is not installed properly.
- The ring gear (6) is not completely tightened into the gear case (8).
- Foreign substances are engaged.

Consider the above and conduct disassembly/assembly again (Photo 32).

[8] Remove the jig bolts and spacers used during the assembly of the case subassembly (1-4). Degrease the end surface of the ring gear (6) and apply a uniform coat of liquid packing (KTF0086 ThreeBond 1215) (22) (Photo 33).

PHOTO 32

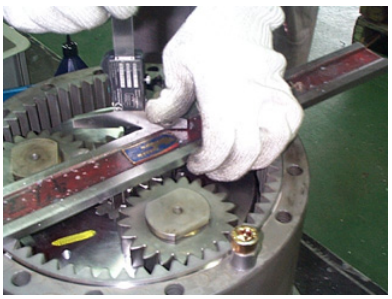

PHOTO 33

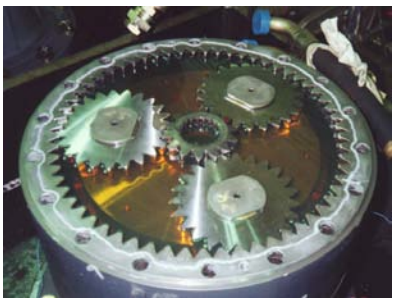

[9] Install the swing motor. Then degrease the thread of the hexagon socket head bolts M20x200 (23) first, and apply liquid packing (KSC0188:ThreeBond 1360K) (24). Tighten 12 locations by applying the torque of 568.4 to 649.7 N.m (Photo 34 and Photo 35).

PHOTO 34

PHOTO 35

[10] Refill 6 liters of gear oil (Viscosity Grade: GL-4 or higher).

https://truckmanualshub.com/

Disassembling Instructions

1. Disassembling the swing reduction gears

The procedures in this section are basically the reverse of those described in 2. Assembling the Swing Reduction Gears. Refer to 2. Assembling the Swing Reduction Gears (Page 6/10) for the disassembly of swing reduction gear.

[1] Remove the plug with nylon seal (11) and drain the gear oil.

[2] Remove all hexagon socket head bolts (M20 x200) (23) (Photo 35).

[3] Use a crane to gradually lift and remove the swing motor.

[4] Remove the sun gear No. 1 (1) and the carrier No. 1 subassembly (1-1) (Photo 31 and Photo 30).

[5] Use the lifting taps (M10, 2 locations) on planetary carrier No. 2 (29) to slowly lift and remove the carrier No. 2 subassembly (1-2) (Photo 27).

[6] Remove the sun gear No. 2 (5), which is remaining on the shaft.

2. Disassembling the carrier No. 1 subassembly

The disassembly of this component is not possible due to the fact that it is crimped.

3. Disassembling the carrier No. 2 subassembly

[1] Use the jig and press the spring pin (33) (10x40) securely into the planetary carrier No. 2 (29). Use caution and avoid applying excessive force to prevent the planetary carrier No. 2 (29) pin hole bore from getting damaged.

[2] Gently tap through the casting hole at the bottom of planetary carrier No. 2 (29) and remove the planetary pin No. 2 (31). Use caution to prevent the planetary gear No. 2 (30) and the side plate No. 2 (32) from falling off.

[3] Draw out the spring pin (33) through the spring pin hole of planetary pin No. 2 (31). If it is necessary to use a vise on the planetary pin No. 2 (31), use cloth, etc. to avoid damage to the pin.

[4] Repeat Steps (1) through (3) on the four locations.

4. Disassembling the case subassembly

[1] Turn over the case subassembly.

[2] Remove the wire (18).

[3] Use the lifting tap holes (M16, 2 locations) on the gear shaft (20) end and draw out the shaft subassembly (1-3).

5. Disassembling the shaft subassembly

The component is not intended for disassembly.

https://truckmanualshub.com/

Reduction Gear Swing Assembly Drawing

PART NAME	SYM	QTY
SUN GEAR No.1	1	1
THRUST PLATE	2	1
PLANETARY CARRIER No.1 ASSY	3	1
PLANETARY CARRIER No.2 ASSY	4	1
SUN GEAR No.2	5	1
RING GEAR	6	1
KNOCK PIN	7	4
GEAR CASE	8	1
ROLLER BEARING	9	1
PIPE SPACER	10	1
PLUG(WITH NYLON SEAL)	11	1
OIL SEAL	12	1
LIQUID PACKING	13	NEED
PLUG(WITH NYLON SEAL)	14	2
PIPE SPACER	15	1
ROLLER BEARING	16	1
BEARING COVER	17	1
SPECIAL WIRE	18	1
PIPE SPACER	19	1
GEAR SHAFT	20	1
GREASE(LITHIUM,NO.2)	21	kg 1.2
LIQUID PACKING	22	NEED
HEX SOC HD BOLT M20X200	23	12
LIQUID PACKING	24	NEED

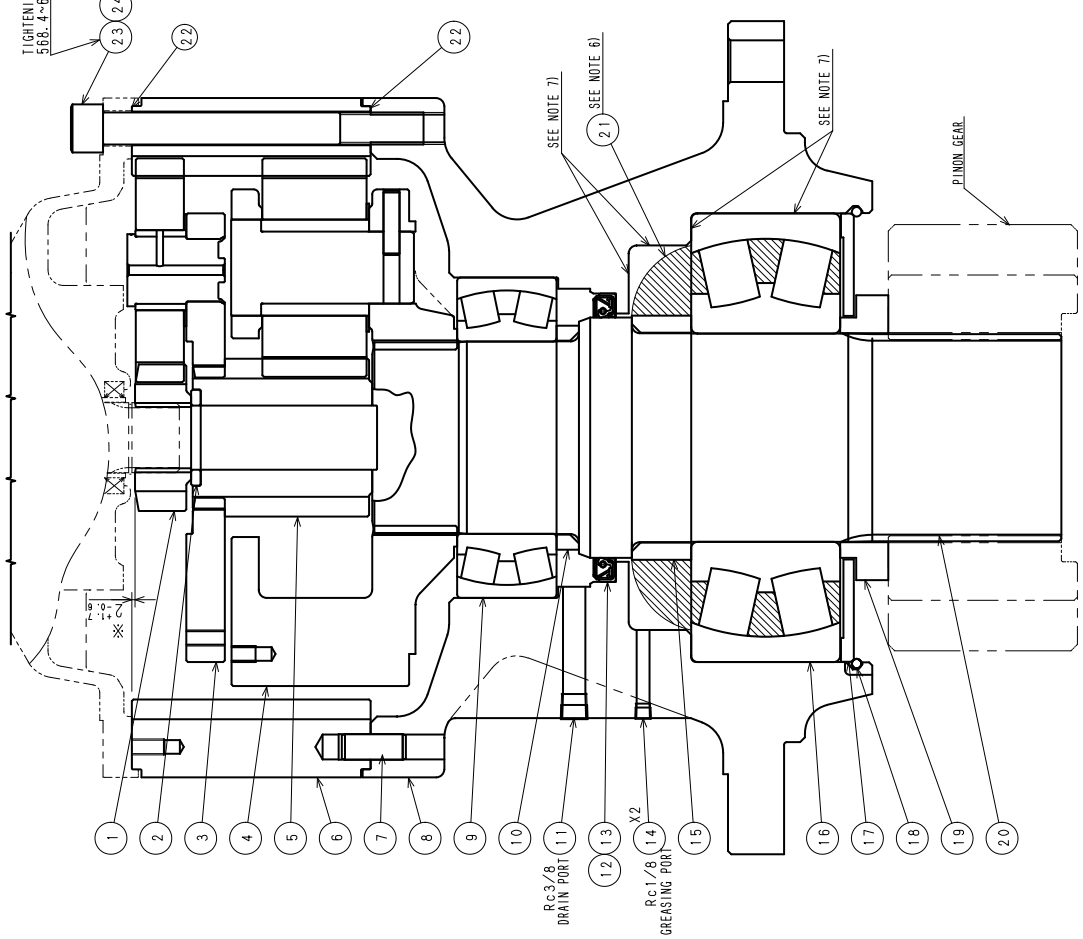

NOTES

1) COAT THE THREAD WITH LIQUID GASKET(THREEBOND 1360K) AND FASTENED BY TIGHTENING TORQUE.
2) PAINT FLUID PACKING-THREEBOND 1215 ON THREE COMBINED SURFACES.
3) PAINT THREE BOND 1208B ON FIXING PART OF OIL SEAL&SEAL RETAINER.
4) AFTER LUBRICATE THE GREASE ㉑(LITHIUM GREASE) TO SEAL-LIP⑫. THEN, ASSEMBLE IT USING GUIDE TO INSERT.
5) ROLLOR BEARING⑯IS FORCE FITED TO GEAR SHAFT ⑳. AFTER LUBRICATE GREASE ㉑ INSEDE BY TILT OUTER LING.
6) LUBRICATE GREASE ㉑(LITHIUM GREASE).1200g(AMOUNT OF NOTES 5 AND 6) ABOUT HATCHING AREA IN DWG AFTER ASSEMBLE ⑮⑯⑳.
7) LUBRICATE LITHIUM GREASE ㉑ON THE INNER SURFACES OF GEAR CASE ⑧ (GREASE ROOM AND THE SURFACE CONTACTED WITH ROLLER BEARING⑯).
8) SEE THAT ※ CLEARANCE IS LESS THAN 2±1mm AFTER FINISHING ASSEM. WITH ROTATING SUN GEAR SYM ① BY HAND-OPERATED WAY. CHECK THE GEAR ROTATE SMOOTHLY AND DOESN'T GENERATE FOREIGN SOUND.

KSC0252Z-C00

https://truckmanualshub.com/

Planetary Carrier No.1 Assembly Drawing

PART NAME	SYM	QTY
PLANETARY CARRIER No.1	25	1
PLANETARY GEAR No.1	26	3
PLANETARY PIN No.1	27	3
SIDE PLATE No.1	28	3

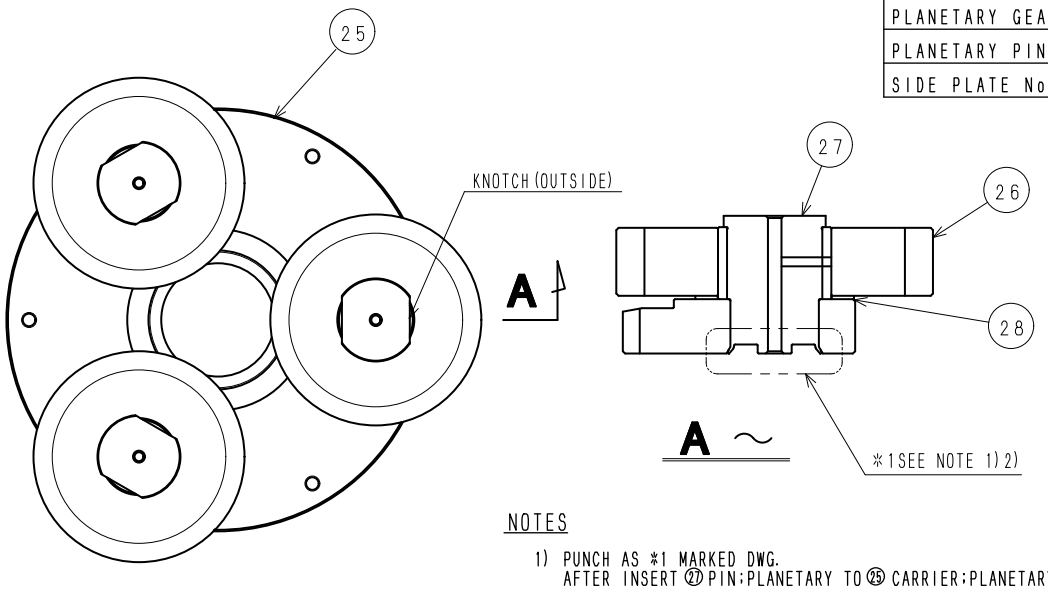

NOTES

1) PUNCH AS ※1 MARKED DWG.
AFTER INSERT ㉗ PIN;PLANETARY TO ㉕ CARRIER;PLANETARY.
KEEP PRESS OVER 10 SECOND AFTER PUNCH.
2) FREE FROM HARMFULL LAP & BURR AFTER PUNCH.

KSC0245X-B00

Planetary Crarrier No.2 Assembly Drawing

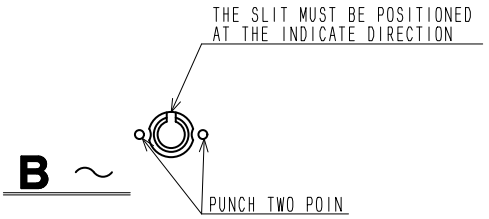

PART NAME	SYM	QTY
PLANETARY CARRIER No.2	29	1
PLANETARY GEAR No.2	30	4
PLANETARY PIN No.2	31	4
SIDE PLATE No.2	32	4
SPRING PIN 10X40	33	4

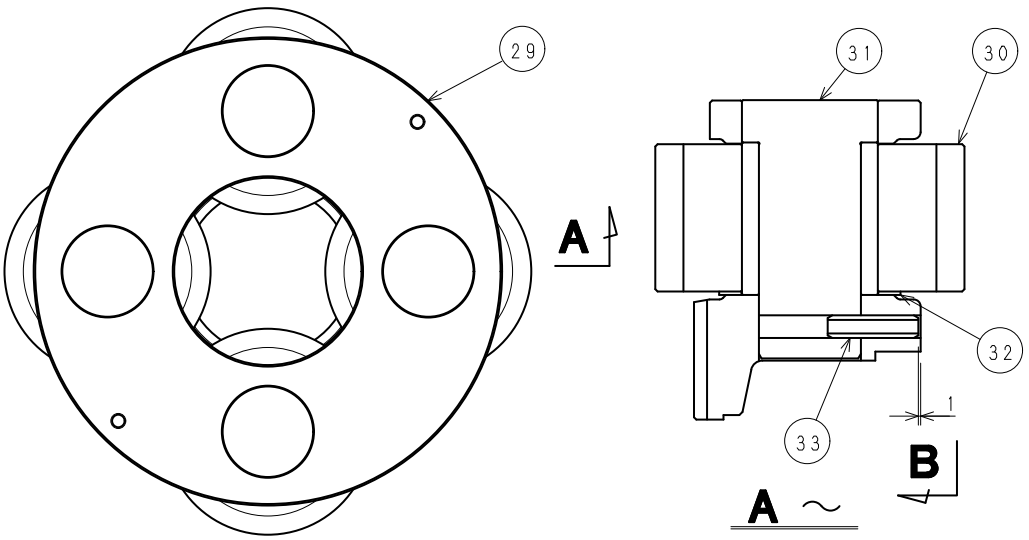

KSC0246X-B00

https://truckmanualshub.com/

Maintenance Instructions

1. Disassembly

(1) Disassembly Precautions

[1] Stop the engine after the pressure in the actuator has been released. Otherwise, it is very dangerous because highly pressurized oil may erupt or parts may abruptly pop out. When the valves are partially disassembled while they are still attached to the main body, the following special precaution should be taken:

If disassembly of the short cap assembly is attempted with insufficient pressure release or the bucket not firmly placed on the ground, the poppet will pop out and the bucket will drop at the same time, which causes a very dangerous situation. Therefore, place the bucket firmly on the ground and release pressure completely before disassembling.

[2] Release air pressure in the tank.

[3] Clean well areas neighboring the location to be disassembled and take caution to prevent foreign substances from entering into the valves while disassembling.

[4] Put tags on the disassembled parts to easily identify the assembly locations.

[5] Replace all disassembled seals (O-rings, backup rings) with new ones.

[6] Do not change spools because they are selectively matched with their valve housings.

(2) Disassembly Procedure (See the Service Parts List for reference numbers.)

1) Disassembling the main spool section

[1] Loosen and remove the socket head bolts (74: 2 locations for each section, width across flats, 8) on the caps (8: 8 locations) and caps (9: 2 locations).

[2] As necessary, loosen and remove the plug assembly (73: width across flats, 6) and plug (91: width across flats, 19).

[3] Remove O-ring (7: one location for each section) from the valve housings (1), (13).

[4] Pull out each spool from the valve housing as a subassembly.

※
1. Be careful not to cause any dents or scratches while pulling out the spool.
2. Place tags on each spool to easily identify the locations when assembling.

[5] Loosen and remove the socket head bolts (74: 2 locations for each section, width across flats, 8) on the caps (10: 3 locations) and caps (12: 7 locations).

[6] As necessary, loosen and remove the plug assembly (73: width across flats, 6).

[7] Remove O-rings (7: one location for each section) from the valve housings (1), (13).

[8] Disassemble the spool assembly

※
1. Use blocks (see the drawing above) to fasten the spool between them with a vise in order to avoid damage to the periphery of the spool.
2. Use an industrial dryer and heat spool peripheral to break down the adhesive, which is applied around the threaded part of the spool end.
3. The heating temperature should be 200 to 250×C. Heat until the spool end becomes loose enough to remove immediately after heating.
4. If overheated, replace the spring with a new one.

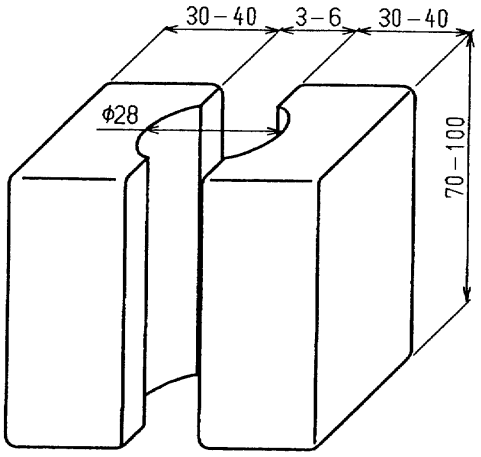

SPOOL DISASSEMBLY/ASSEMBLY BLOCKS

https://truckmanualshub.com/

1) Loosen the spool ends (width across flats, 8) in the spool assemblies (2 to 6), (14 to 17) to disassemble the spring seats and springs.
2) Poppets, springs and plugs are integrated into the spool within the assemblies (3), (14). Do not disassemble them unless it is necessary.
   If it is necessary to disassemble them, heat the spool peripheral and break down the adhesive around the threaded section to remove the plug.
   When assembling, always replace O-rings and backup rings with new ones.

2) Disassembling the arm 1 parallel tandem spool section

[1] Loosen and remove the socket head bolts (78: width across flats, 5) on the cap (18).
[2] Remove O-ring (23) from the cap (18).
[3] Pull out the spool (19) from the valve housing as a subassembly.
[4] Disassemble the spool assembly

※
1. Use blocks (see the drawing on the previous page) to fasten the spool between them with a vise in order to avoid damage to the periphery of the spool.
2. Use an industrial dryer and heat spool peripheral to break down the adhesive, which is applied around the threaded part of the spool end.
3. The heating temperature should be 200 to 250×C. Heat until the spool end becomes loose enough to remove immediately after heating.
4. If overheated, replace the spring with a new one.

1) Loosen the spool end (22: width across flats, 5) in the spool (19) and disassemble the spring seats (20) and spring (21).

https://truckmanualshub.com/

3) Disassembling the arm regenerative relief valve (for a subassembly contained in the assembly, it is expressed as assembly No. - subassembly No.)

1. Danger! Parts can pop out due to unreleased internal pressure when removing plugs.
2. Loosen plugs slowly and make sure that there is no resistance due to unreleased pressure. Then, start disassembling.

[1] Loosen and remove the plug (24: width across flats, 32), and then, remove O-ring (25).
[2] Pull out spring (26) and spool (27-1) from the sleeve (27-2).
[3] Pull out the sleeve (27-2) from the valve housing.
[4] Remove the piston (27-3), O-ring (30) and backup ring (31) from the sleeve (27-2).

4) Disassembling the load check valve section

1. Danger! Parts can pop out due to unreleased internal pressure when removing plugs.
2. Loosen plugs slowly and make sure that there is no resistance due to unreleased pressure. Then, start disassembling.

[1] Loosen and remove the socket head bolts (75: 4 locations for each section, width across flats, 8) on the flanges (37: 8 locations).
[2] Remove the spring (35), poppet (34) [poppet (51)] and O-ring (36) from the valve housing.

Note: Please note that there is no poppet or spring in the straight travel valve section (Section H-H).

[3] Loosen and remove the socket head bolts (75: width across flats, 8) on the flanges (52: 2 locations).
[4] Remove the spacer (53) from the valve housing and remove the O-ring (54) and backup ring (55) from the spacer (53).
[5] Remove the spring (35) and poppet (34) from the valve housing.
[6] Loosen and remove the plug (72: width across flats, 8). (Section C-C)
[7] Remove the spring (33) and poppet (32) from the valve housing.
[8] Loosen and remove the plug (72: width across flats, 8). (Section L-L)
[9] Remove the spacer (57), spring (33) and poppet (32) from the valve housing.
[10] Loosen and remove the plug (92: width across flats, 36). (Section G-G)
[11] Loosen and remove the socket head bolts (96: 4 locations, width across flats, 8) on the flange (43).
[12] Remove the spring (45), poppet (44) and O-ring (36) from the valve housing.
[13] Loosen and remove the plug (46: width across flats, 27) and O-ring (47).
[14] Remove the spring (48) and poppet (49) from the valve housing.

https://truckmanualshub.com/

5) Disassembling the anti-drift valve section (for a subassembly contained in the assembly, it is expressed as assembly No. - subassembly No.)

1. Danger! Parts such as seals can pop out due to unreleased internal pressure when removing anti-drift valve assemblies.
2. Loosen socket head bolts slowly and make sure that there is no resistance due to unreleased pressure. Then, start disassembling.

[1] Loosen and remove the socket head bolts (76: 4 locations for each section, width across flats, 8) on the anti-drift valve assembly (67: 2 locations).
[2] Remove the O-rings (41), (42) from the valve housing, and remove the O-ring (40-4) from the spacer assembly.
[3] Screw the socket head bolt (78: M6 x 1) into the spacer and remove the space assembly (40) from the valve housing.
[4] Remove the O-ring (40-2) and backup ring (40-3).
[5] Remove the spring (39) and poppet (38) from the valve housing.
[6] Disassemble the anti-drift assembly

1. Danger! Parts can pop out due to unreleased internal pressure when internal parts of the anti-drift valve are disassembled while the valve is attached to the valve housing.
2. Loosen the plug assembly (67-14) and plug (67-3) slowly and make sure that there is no resistance due to unreleased pressure. Then, start disassembling.

1) Loosen and remove the plug assembly (67-14: width across flats, 38) and remove the O-ring.
2) Remove the piston (67-4), spool (67-5) and spring (67-7).
3) Loosen and remove the plug (67-3: width across flats, 38) and remove the O-ring (67-13).
4) Remove the sleeve (67-6) and poppet (67-2) from the body, and remove the O-rings (67-9 and 10) and backup rings (67-11 and 12) on the sleeve peripheral.
5) Take out the spring seat (67-16) and spring (67-8) from the bottom of the hole.
6) As necessary, loosen and remove the plug assembly (67-15: width across flats, 5).

Note: Do not disassemble the steel balls (67-17) because they are press-fitted into the body.

6) Disassembling the relief valve

※
1. Loosen and remove the plug on the main body mounting section when removing the relief valve.
2. Do not loosen the plug or lock nut for adjusting the set pressure.
3. Danger! If the plug for adjusting the set pressure rotates, the set pressure changes.

[1] Loosen and remove the overload relief valves (69: 6 locations, width across flats, 32).
[2] Loosen and remove the main relief valve (68: width across flats, 32).
[3] Loosen and remove the relief valve assembly (70: 2 locations, width across flats, 32) and remove the O-rings (70-5 and 6).

https://truckmanualshub.com/

7) Disassembling the auxiliary section

[1] Loosen and remove the socket head bolts (75: width across flats, 8) on the cap (88: 2 locations) and remove the O-ring (89).

[2] Loosen and remove the plug assembly (87: 2 locations, width across flats, 24) and remove the O-ring and backup ring.

8) Disassembling other plugs

[1] Loosen and remove the plug assembly (60: width across flats, 27) and remove the O-ring. (Section J-J)

[2] Loosen and remove the plug (61: width across flats, 22) and remove the O-ring (62). (Section K-K)

[3] Loosen and remove the orifice plug (63: width across flats, 5). (Section A1-A1)

[4] Loosen and remove the plug assembly (92: width across flats, 36) and remove the O-ring.

[5] Loosen and remove the plug assembly (72: width across flats, 8) and remove the O-ring.

[6] Loosen and remove the plug assembly (73: width across flats, 6) and remove the O-ring.

9) Disassembling the valve housing uniting bolt

※
1. Do not disassemble the uniting bolt (77) unless it is necessary.
2. If disassembly is necessary, the work should be carried out by placing the main body on a level workbench.
3. Prepare replacement O-rings (65 and 66).

[1] Loosen and remove the socket head bolts (77: 8 locations, width across flats, 14). Remove the washers (81: 8 locations).

[2] Remove the O-rings (65), (66) on the mating faces of the valve housing.

https://truckmanualshub.com/

2. Cleaning

Clean all disassembled parts completely with clean mineral oil.
Dry them with compressed air and place each part on a clean paper or vinyl sheet for inspection.

3. Inspection

Inspect all surfaces of each part for burrs, scratches, dents or other damage.

[1] Check for scratches or cuts on the surface of the load check sheet in the valve housing and make sure there are no dents, dirt or rust. If scratches are small, remove them with an oilstone.

[2] Ensure that there are no scratches, dents or other damage on spool peripheral. If scratches are small, remove them with an oilstone.

[3] All sliding parts should move smoothly.
Additionally, there should be no foreign substances in any grooves or passages.

[4] Any broken, extremely deformed or worn springs should be replaced with new ones.

[5] If the relief valve malfunctions, inspect it following the maintenance instructions in Relief Valve.

[6] All O-rings and backup rings attached to the disassembled parts should be replaced with new ones.

[7] Make sure that there are no remaining paint pieces around holes on the body and plug seats. (Paint pieces inside the valve can cause engagement and blockage and lead to malfunctions and oil leakage.)

4. Assembly

1. Assembly Precautions

(1) Precautions for handling O-rings

[1] Do not use O-rings that have been deformed/defective or damaged while handling.

[2] For sufficient lubrication, apply grease or hydraulic oil to O-rings and O-ring fitting surfaces to facilitate smooth attachment.

[3] Do not expand O-rings to the extent that they deform permanently.

[4] When inserting O-rings, do not place them by rolling. (Distorted O-rings cannot be recovered by themselves after insertion, and this could cause oil leakage.)

(2) Precautions for handling spools

[1] Always observe specified torque. Applying excessive torque to threaded parts can cause spool malfunctions.

[2] Be careful that each spool, spring and spool end are installed exactly the same way as before disassembly.

(3) How to apply adhesive (male and female sections of the part where adhesion is necessary)

[1] Cleaning (degreasing)
Clean by vapor degreasing using acetate or ether or clean with alkali washing agent.

[2] Drying
Dry the adhesion surfaces by blowing clean air or natural drying.
Insufficient drying lowers adhesive effects.

[3] Primer application
Lightly spray a hardening accelerator, "Loctite Primer T" onto the adhesive surfaces and leave for at least 3 to 5 minutes to dry.

[4] Applying adhesive
Apply a small portion of adhesive (Loctite No. 271 or equivalent) to 2 or 3 threads of the entry part in the spool female screw.
At this time, be careful to mount it so that the applied part does not touch the spring sheet.

https://truckmanualshub.com/

2. Subassembly Assembly Procedure

※ Prior to assembly, check the number of each part, its installation location, necessary tools and other necessary information.

(1) Assembling the spool assembly (main spool)

[1] Apply adhesive to the threaded part of spools (2 to 6), (14 to 17), and install spring sheets, springs and spool ends.

[2] Hold the spool between the blocks (used in the disassembly procedure) and fasten them with a vise and tighten the spool end with specified torque. Torque value: 20 to 22 N・m.

※
1. Do not apply too much adhesive. Be careful not to allow the adhesive to enter the inside of the parts.
2. Do not apply torque exceeding specified value. Doing so may cause poor spool operation.
3. Pay special attention. Two types of springs are used.

(2) Assembling the arm 1 parallel tandem spool assembly

[1] Apply adhesive to the threaded part of the spool (19) and install the spring sheet (20), spring (21) and spool end (22).

[2] Hold the spool between the blocks (used in the disassembly procedure) and fasten them with a vise and tighten the spool end with specified torque. Torque value: 19 to 22 N・m.

※
1. Do not apply too much adhesive. Be careful not to allow the adhesive to enter the inside of the parts.
2. Do not apply torque exceeding specified value. Doing so may cause poor spool operation.

(3) Assembling the anti-drift valve assembly

[1] Install the O-rings (67-9 and10) and backup rings (67-11 and 12) onto the peripheral grooves of the sleeve (67-6).

※
1. Pay attention to the installing positions of the O-ring and backup ring.
2. Reversed positions can cause O-ring breakage and lead to a larger natural drop of the actuator.

[2] Insert the poppet (67-2) and spool (67-5) into the sleeve hole.

[3] Install the spring sheet (67-16) in the smaller diameter part of the poppet end, and place the spring (67-8) on them. Insert them all together with a sleeve into the body (67-1).

Apply grease to the seat before installing so that the spring and spring sheet can be firmly placed on the seat.

[4] Install the spring (67-7) and piston (67-4) onto the plug (67-3).

[5] Fasten the plug assembly (67-14) attached with O-ring onto the plug (67-3).
Torque value: 147 to 157 N・m.

[6] Fasten the plug (67-3) attached with O-ring (67-13) onto the body (67-1).
Torque value: 147 to 157 N・m.

[7] Fasten the plug assembly (67-15) attached with O-ring onto the body (67-1).
Torque value: 14 to 18 N・m.

https://truckmanualshub.com/

3. Control Valve Main Body Assembly Procedure

(1) Assembling the relief valve

※
1. Always fasten the plug on the main body mounting section when installing relief valves.
2. Do not fasten the plug and lock nut for adjusting the set pressure.
3. Danger! If the plug for adjusting the set pressure rotates, the set pressure changes.

[1] Screw and fasten the main relief valve (68).
Torque value: 78 to 88 N・m.

[2] Screw and fasten the overload relief valves (69: 6 locations) into each section.
Torque value: 78 to 88 N・m.

[3] Screw and fasten the relief valve assembly (70: 2 locations) attached with O-rings.
Torque value: 103 to 113 N・m.

(2) Assembling the load check valve

[1] Attach O-rings (36) to Arm 1 and 2 (Section D - D), Boom 1 and 2 (Section E - E), Swing and Bucket (Section F - F) sections, and install the poppet (34) and spring (35) onto them.
Place the flange (37) and fasten with socket head bolts (75).
Torque value: 58 to 64 N・m.

[2] Attach O-ring (36) to Travel section (Section H - H), and install the poppet (51) and spring (35) onto it.
Place the flange (37) and fasten with socket head bolts (75).
Torque value: 58 to 64 N・m.

[3] Attach O-ring (36) to Straight Travel section (Section H - H), and fasten the flange (37) with socket head bolts (75).
Torque value: 58 to 64 N・m.

[4] Install the poppet (34) and spring (35) to Common section (Section I - I), and insert the spacer (53) attached with O-ring (54) and backup ring (55).
Fasten the flange (52) with socket head bolts (75).
Torque value: 39 to 44 N・m.

※
1. Pay attention to the installing positions of the O-ring and backup ring.
2. Reversed positions can cause O-ring breakage and lead to an external oil leakage.

[5] Attach O-ring to the backup section (Section G - G) and install the poppet (44) and spring (45).
Place the flange (43) and fasten them with socket head bolts (96).
Torque value: 58 to 64 N・m.
Screw and fasten the plug assembly (92) attached with O-ring.
Torque value: 205 to 227 N・m.

[6] Install the poppet (49) and spring (48) onto Travel section (Section G - G).
Screw and fasten the plug (46) attached with O-ring (47).
Torque value: 107 to 117 N・m.

[7] Install the poppet (32) and spring (33) onto Arm 1 parallel tandem section (Section C - C).
Screw and fasten the plug assembly (72) attached with O-ring.
Torque value: 73 to 79 N・m.

[8] Install the poppet (32), spring (33) and spacer (57) onto Arm 2 parallel tandem section (Section L - L).
Screw and fasten the plug assembly (72) attached with O-ring.
Torque value: 73 to 79 N・m.

https://truckmanualshub.com/

(3) Assembling the anti-drift valve

[1] Place O-rings (41), (42) onto the fitting surfaces on the anti-drift valve assemblies of Arm 1 section (Section D - D) and Boom 1 section (Section E - E).

[2] Assemble the poppet (38) and spring (39) and install the spacer assembly (40) attached with O-ring and backup ring.

※
1. Pay attention to the installing positions of the O-ring and backup ring.
2. Reversed positions can cause O-ring breakage and lead to an external oil leakage.
3. Make sure that O-ring (40-4) is attached onto the spacer assembly and it is installed in the correct direction.

[3] Install the anti-drift valve assemblies (67: 2 locations) and fasten them with socket head bolts (76).
Torque value: 39 to 44 N・m.

(4) Assembling the auxiliary section

[1] Install the caps (88: 2 locations) attached with O-ring (89) and fasten them with socket head bolts (75).
Torque value: 58 to 64 N・m.

[2] Screw and fasten the plug assemblies (87: 2 locations) attached with O-ring and backup ring.
Torque value: 78 to 88 N・m.

(5) Assembling the arm regenerative relief valve

[1] Install the O-rings (30) and backup rings (31: 2 locations) onto the sleeve (28).

[2] Install the piston (29) and spool (27) onto the sleeve and insert them into the valve housing.

[3] Place the spring (26) inside the plug (24) attached with O-ring (25) and screw and fasten them into the valve housing.
Torque value: 103 to 113 N・m.

(6) Assembling the arm 1 parallel tandem spool

[1] Install the spool (19) as a subassembly into the valve housing.

※ After inserting the spool, make sure that there is no roughness or sticking by sliding the spool.

[2] Place the cap (18) attached with O-ring (23) and fasten them with socket head bolts (78).
Torque value: 8.8 to 10.8 N・m.

https://truckmanualshub.com/

(7) Assembling the main spool

[1] Install the O-rings (7: 20 locations) on the cap mating surfaces of the valve housing.

[2] Install the spool assemblies (2 to 6), (14 to 17) as a subassembly into the same position before disassembly.

※
1. Install the spool slowly with its direction aligned straight to the hole.
2. After inserting spool, make sure that there is no roughness or sticking by sliding the spool.
3. If the spool is inserted when there is roughness or sticking, the spool can malfunction.

[3] Install the caps (10: 3 locations) and caps (12: 7 locations) and fasten them with socket head bolts (74).
Torque value: 39 to 44 N・m.

[4] Install the caps (8: 8 locations) and caps (9: 2 locations) and fasten them with socket head bolts (74).
Torque value: 39 to 44 N・m.

※ The caps (9), (10) have to be installed in specific directions.

[5] Screw and fasten the plug assembly (73) attached with O-ring onto the long caps of Boom 2 (Section E - E) and Straight Travel (Section H - H) sections.
Torque value: 19 to 22 N・m.

[6] Screw and fasten the plug assembly (73) attached with O-ring onto the short caps of Backup (Section G - G) and Straight Travel (Section H - H) sections.
Torque value: 19 to 22 N・m.

[7] Screw and fasten the plug (91) attached with O-ring onto the long cap of Backup (Section G - G) section.
Torque value: 19 to 22 N・m.

※
1. Be careful and do not apply excessive torque when fastening the cap onto the plug.
2. Excessive torque may destroy the threaded part of the cap.

(8) Assembling other plugs

[1] Screw and fasten the plug assembly (60) attached with O-ring.
Torque value: 103 - 113 N・m.

[2] Screw and fasten the plug (61) attached with O-ring (62).
Torque value: 39 to 44 N・m.

[3] Screw and fasten the orifice plug (63).
Torque value: 14 to 18 N・m.

[4] Screw and fasten the plug assembly (92) attached with O-ring.
Torque value: 205 to 227 N・m.

[5] Screw and fasten the plug assembly (72) attached with O-ring.
Torque value: 73 to 79 N・m.

https://truckmanualshub.com/

Relief Valve

1. Instructions for Disassembling and Assembling the Relief Valve

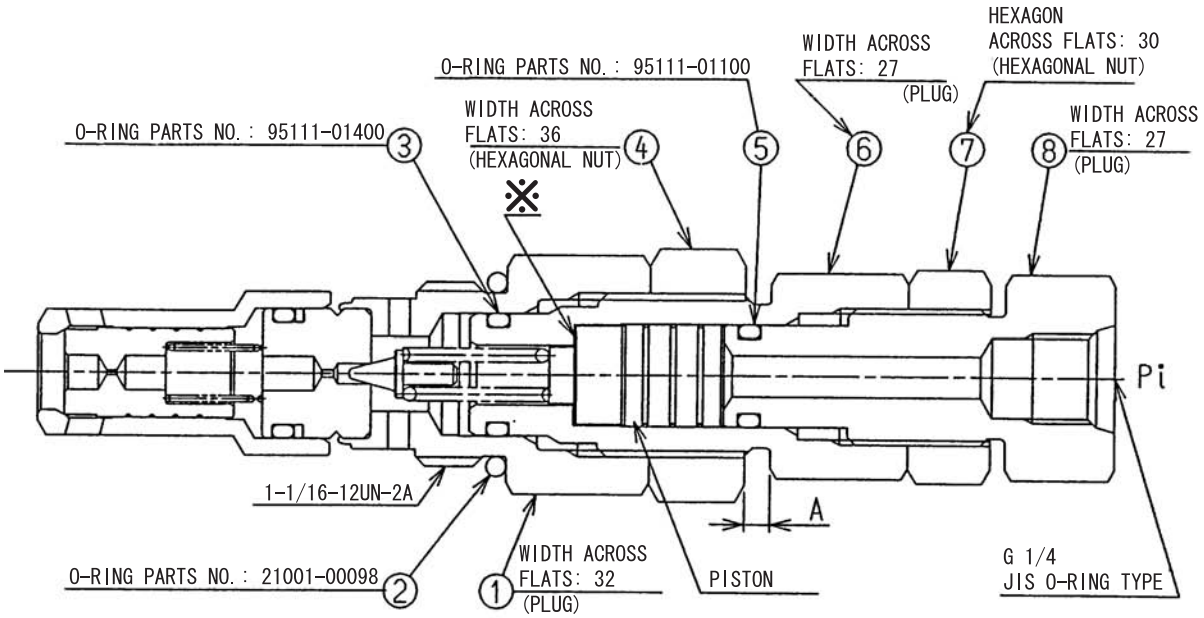

(1) Disassembly

This product has to be replaced as an assembly.
When replacing, loosen the plug (1: width across flats, 32) with spanners, and remove O-ring (2).
If oil leakage from the nut (4) is found, loosen the nut (4) and plug (1) and replace O-ring (3).
If oil leakage from the nut (7) is found, loosen the nut (7) and plug (8) and replace O-ring (5).

(2) Assembly

Make sure that there are no dirt and paint pieces around the threaded part of the plugs (1, 6 and 8) and nuts (4 and 7) before installing new O-rings.
Also clean the relief valve fitting section sufficiently. Then, install the relief valve and fasten the plug (1: width across flats: 32).
Torque value: 78 to 88 N・cm.
If the adjuster kit was disassembled, adjust the pressure following the instructions in section 4. Adjusting the relief valve.

※	The specified tightening torque values are all for under wet conditions (with hydraulic oil applied).

https://truckmanualshub.com/

2. Instructions for Disassembling and Assembling the Overload Relief Valve

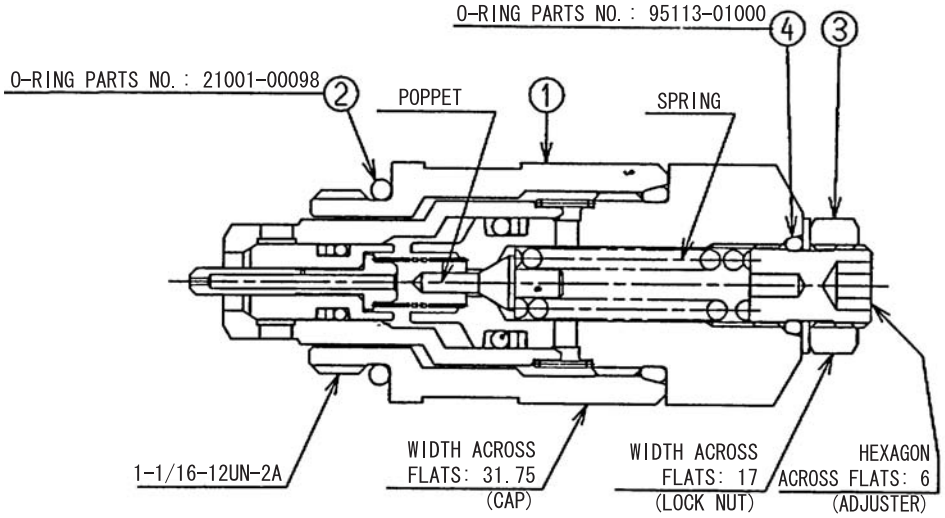

(1) Disassembly

This product has to be replaced as an assembly.
When replacing, loosen the cap (1: width across flats, 31.75) with spanners and remove O-ring (2).
If oil leakage from the adjuster kit section (3) is found, loosen the adjuster kit to replace O-ring (4).

※	When disassembling the adjuster kit, pay attention to parts popping out caused by the spring and/ or the poppet being misplaced.

(2) Assembly

Make sure that there are no dirt and paint pieces around the threaded part of the cap (1) before installing new O-rings (2).
Also clean sufficiently the relief valve attaching section on the valve housing. Then, install the relief valve and fasten the cap (1: width across flats: 31.75).
Torque value: 78 to 88 N・m.
If the adjuster kit was disassembled, adjust the pressure following the instructions in section 4 Adjusting relief valve after cleaning sufficiently around the threaded section.

※	The specified tightening torque values are all for under wet conditions (with hydraulic oil applied).

https://truckmanualshub.com/

3. Instructions for Disassembling and Assembling the Low Pressure Relief Valve

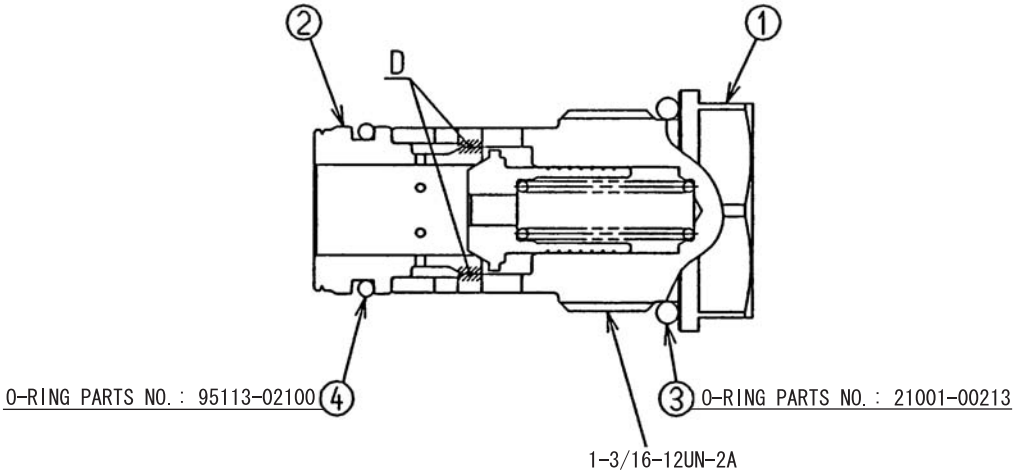

(1) Disassembly

This product should be replaced as an assembly because it is press-fit at Section D. Do not try to disassemble.

(2) Assembly

Make sure that there are no dirt and paint pieces around the threaded part of the plug (1) before installing new O-ring (3).
Install new O-ring (4) onto the sleeve (2).
Clean sufficiently the relief-valve-attaching-section on the valve housing. Then, fasten the plug (1) (width across flats: 32) of the relief valve assembly.
Torque value: 103 to 113 N・m.

※	The specified tightening torque values are all for under wet conditions (with hydraulic oil applied).

https://truckmanualshub.com/

4. Adjusting the Relief Valves

(1) Main relief valve

[1] Attach an accurate pressure gauge to the entry circuit.

[2] Run the pump at rated revolutions.

[3] Switch over the spool in the control valve. Read the value on the pressure gauge when the cylinder is at the end of the stroke.

※	Change the spool over for the actuator whose set pressure on the overload relief valve is higher than the set pressure on the main relief valve.

[4] High pressure setting (one-step) (See the drawing on Page 11/32.)

1) Tighten the plug (8) until the piston hits the end face of the plug (6) (marked with *). During this procedure, tightening torque for plug (8) should be no greater than 19.6 N・m. Ensure that the plug (6) will not be rotated when tightening the plug (8) (A dimension: 4 mm or greater).

2) Tighten the plug (6) under the conditions of step (a) and adjust the pressure. (Tighten the plug (11) slowly observing the pressure gauge: 28.4 MPa of pressure increase per a turn of the plug.)
After setting the pressure, lock the plug with hexagonal nut (4).

[5] Low pressure setting (two-step)
Loosen the plug (8) under the conditions described in 4. High pressure setting and adjust the pressure.
(When the plug (8) is loosened, the piston moves to the right in the drawing, the spring load decreases: 21.3 MPa of pressure decrease per a turn of the plug.)
After setting the pressure, lock the plug with hexagon nut (7).

[6] Once again, by increasing the pressure, make sure that the specified pressure is gained.

(2) Overload relief valve

※	If the set pressure on the overload relief valve is higher than one on the main relief valve, do not adjust the overload relief valve. Replace it with a preset relief valve as an assembly.

[1] Switch over the spool in the control valve. Read the value on the pressure gauge when the cylinder is at the end of the stroke.

[2] Turn the adjuster clockwise until the required pressure is obtained.
Reference no. 69, 6 locations in total: 21.2 MPa of pressure increase per a turn of the adjuster.

[3] When the specified pressure is reached, press the adjuster to prevent its turning and tighten the lock nut.
Torque value: 27.5 to 31.4 N・m.

[4] Once again, by increasing the pressure, make sure that the specified pressure is gained.

https://truckmanualshub.com/

Installation

[1] Ensure that piping does not give any extra external load on the valve.
[2] Tighten all the mounting bolts uniformly.
[3] Welding should not be carried out too close to the valve. Otherwise, the seals can be damaged by excessive heat or spatter.
[4] To prevent dirt from entering, keep the curing materials on until the piping is conducted.

Operation

[1] Before operating the machine, ensure that the hydraulic circuit and hydraulic oil are clean.
[2] For oil, use hydraulic fluid designed for oil pressure whose aniline point is between 82 and 113×C.
[3] Do not increase the relief valve pressure more than the specified set pressure.
[4] The set pressure difference between main relief valve and overload relief valve should be 2.0 MPa or more.
[5] Idle the machine sufficiently before starting the work.
In particular, in order to prevent sticking caused by spool's heat shocks, it is necessary to take the following precautions to start operating the machine when the temperatures of the hydraulic oil and valve are low:
- Avoid a sudden continuous operation on the main relief valve and overload relief valve. Attempt to increase the temperatures in each section uniformly by operating the machine to allow the hydraulic oil to circulate in each actuator.
- Fine operation or combined operation may cause partial heat in each orifice section. Do not perform these operations suddenly when it is cold.

https://truckmanualshub.com/

Troubleshooting

Control valve in general

Problems	Possible causes	Countermeasures
Spool does not move.	1. Oil temperature has abnormally risen.	Remove any part causing resistance to oil flow in piping.
	2. Dirty hydraulic oil	Change oil and clean circuit at the same time.
	3. Over-tightening of piping port joints	Check torque.
	4. Deformed valve housing by incorrect mounting	Loosen mounting bolts and check their condition.
	5. Pressure is too high.	Check pressure by placing a pressure gauge between pump and cylinder port.
	6. Deformed spool	Replace valve as an assembly.
	7. Damaged return spring	Replace damaged parts.
	8. Dislocated spring or cap	Loosen cap first, and then center and retighten it.
	9. Temperature is not uniform inside the valve.	Warm up entire circuit.
	10. Valve is blocked with dirt.	Eliminate dirt (flushing).
	11. Lack of pilot pressure	Check pilot valve and pilot relief pressure.
Load cannot be held.	1. Oil leakage from cylinder	Check seals in cylinder for damage.
	2. Oil bypasses spool.	Check spool for damage.
	3. Oil leakage from overload relief valve	Clean valve housing seats and relief valve seats.
	4. Oil leakage from anti-drift valve	Disassemble anti-drift valve and clean seat section in each part. If damage is found in seat section, replace poppet or apply lapping to poppet together with the section. If any abnormality is found on anti-drift valve, replace spool and sleeve at the same time because they are press-fit.
Load drops when switching spool from neutral to raised position.	1. Load check valve is blocked with dirt.	Disassemble and clean check valve.
	2. Damage on poppet or seats in the check valve	Replace poppet or apply lapping to poppet and seats.

https://truckmanualshub.com/

Relief valve

Problems	Possible causes	Countermeasures
Pressure does not rise at all.	1. Main poppet, sleeve or pilot poppet sticks and keeps open, or seats in valve are blocked with dirt.	Replace relief valve.
Unstable relief pressure	1. Seats in pilot poppet are damaged.	
	2. Piston or main poppet sticks.	
Incorrect relief pressure	1. Wear in seats due to dirt	
	2. Looseness in lock nut and adjuster	Reset pressure and tighten lock nut to specified torque.
Oil leakage	1. Damage on relief valve seats	Replace relief valve.
	2. Each part sticks due to dirt.	
	3. Worn O-rings	Replace O-rings for adjuster or in mounting section.

Hydraulic system in general

Problems	Possible causes	Countermeasures
Hydraulic system malfunctions or does not operate at all.	1. Faulty pump	Check pressure or replace pump.
	2. Faulty relief valve	Replace relief valve.
	3. Faulty cylinder	Repair or replace it.
	4. High load pressure on pump	Check circuit pressure.
	5. Cracks on the valve	Replace valve as an assembly.
	6. Spool does not move with a complete stroke.	Check spool for its movement.
	7. Oil level in tank is too low.	Refill hydraulic oil.
	8. Filter blockage in circuit	Clean or change filter.
	9. Restricted circuit piping	Check piping.

https://truckmanualshub.com/

Parts List

Item No.	Part Name	Qty.
1	Valve housing	1
2	Spool assembly (Arm 2)	1
3	Spool assembly (Boom 1)	1
4	Spool assembly (Bucket)	1
5	Spool assembly (Travel)	2
6	Spool assembly (Straight travel)	1
7	O-ring	20
8	Cap	8
9	Cap	2
10	Cap	3
11	Number not used	-
12	Cap	7
13	Valve housing	1
14	Spool assembly (Arm 1)	1
15	Spool assembly (Boom 2)	1
16	Spool assembly (Swing)	1
17	Spool assembly (Backup)	1
18	Cap	1
19	Spool	1
20	Spring seat	2
21	Spring	1
22	Spool end	1
23	O-ring	1
24	Plug	1
25	O-ring	1
26	Spring	1
27	Spool assembly	1
28	Number not used	—
29	Number not used	—
30	O-ring	1
31	Backup ring	2
32	Poppet	2
33	Spring	2
34	Poppet	8

Item No.	Part Name	Qty.
35	Spring	9
36	O-ring	9
37	Flange	8
38	Poppet	2
39	Spring	2
40	Spacer assembly	2
41	O-ring	2
42	O-ring	2
43	Flange	1
44	Poppet	1
45	Spring	1
46	Plug	1
47	O-ring	1
48	Spring	1
49	Poppet	1
50	Number not used	—
51	Poppet	1
52	Flange	2
53	Spacer	2
54	O-ring	2
55	Backup ring	2
56	Number not used	—
57	Spacer	1
58	Number not used	—
59	Number not used	—
60	Plug assembly	1
61	Plug	1
62	O-ring	1
63	Orifice plug	1
64	O-ring	1
65	O-ring	14
66	O-ring	7
67	Anti-drift valve assembly	2
68	Relief valve kit	1

https://truckmanualshub.com/

Item No.	Part Name	Qty.
69-1	Relief valve kit	5
69-2	Relief valve kit	1
70	Relief valve assembly	2
71	Number not used	—
72	Plug assembly	8
73	Plug assembly	4
74	Socket-head bolt	40
75	Socket-head bolt	44
76	Socket-head bolt	8
77	Socket-head bolt	8
78	Socket-head bolt	2
79	Name plate	1
80	Drive screw	4
81	Washer	8
82	Number not used	—
83	Number not used	—
84	Number not used	—
85	Number not used	—
86	Number not used	—
87	Plug assembly	2
88	Cap	2
89	O-ring	2
90	Number not used	—
91	Plug	1
92	Plug assembly	2
93	Number not used	—
94	Number not used	—
95	Number not used	—
96	Socket-head bolt	4
97	Plug assembly	1

https://truckmanualshub.com/

Reference Diagram 1/3

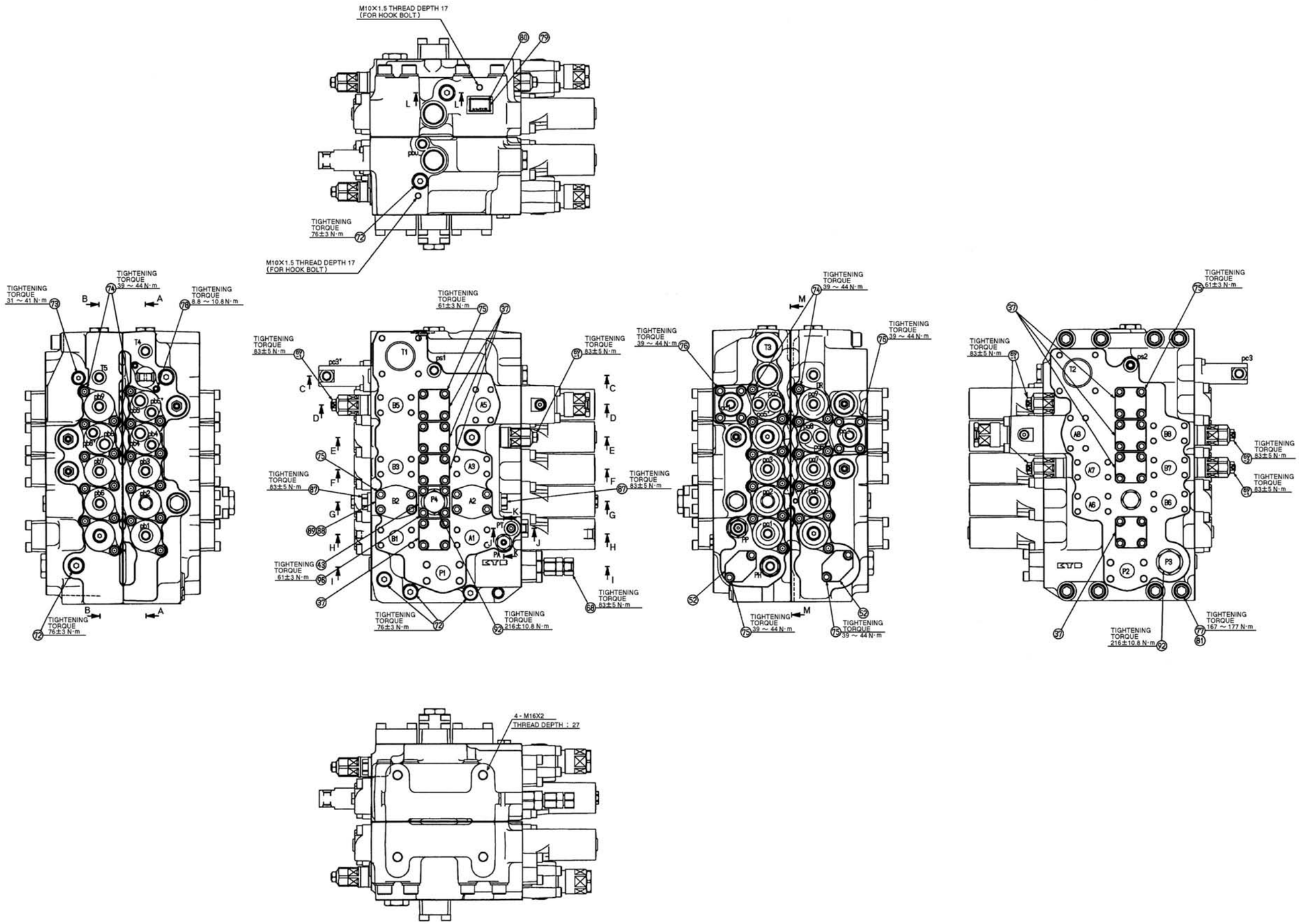

https://truckmanualshub.com/

Reference Diagram 2/3

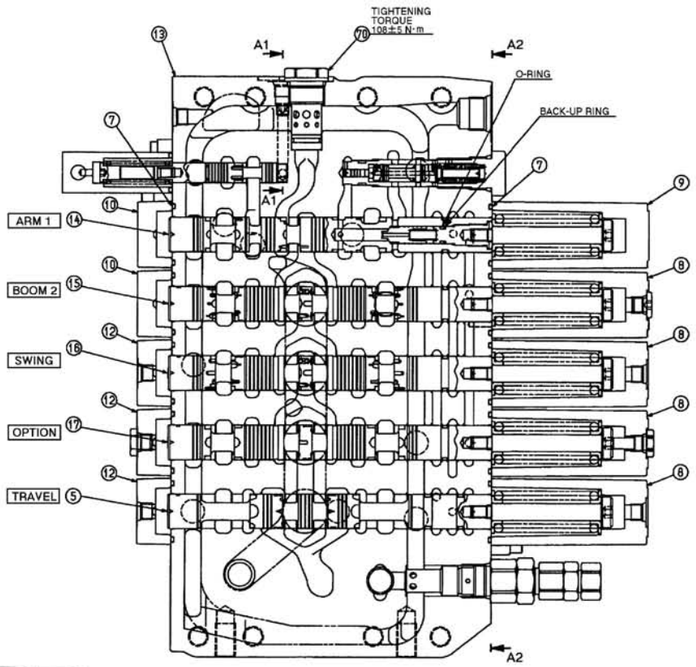

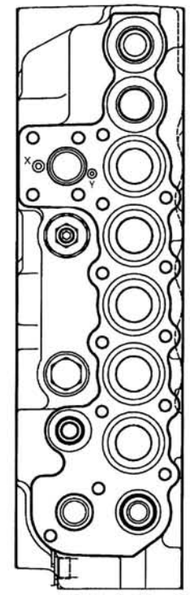

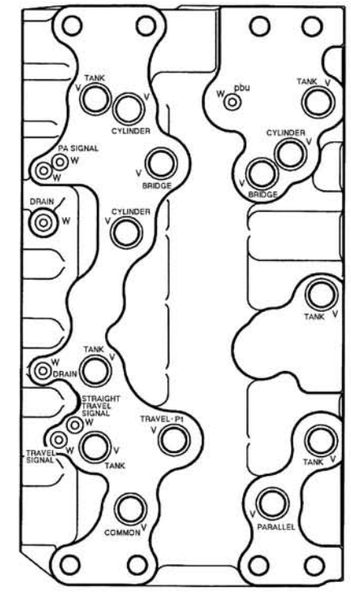

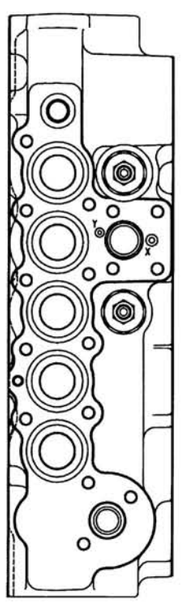

SECTION B1 ~ B1

X (O-RING) — ㊶ (1 PLACE)
Y (O-RING) — ㊷ (1 PLACE)

SECTION A ~ A

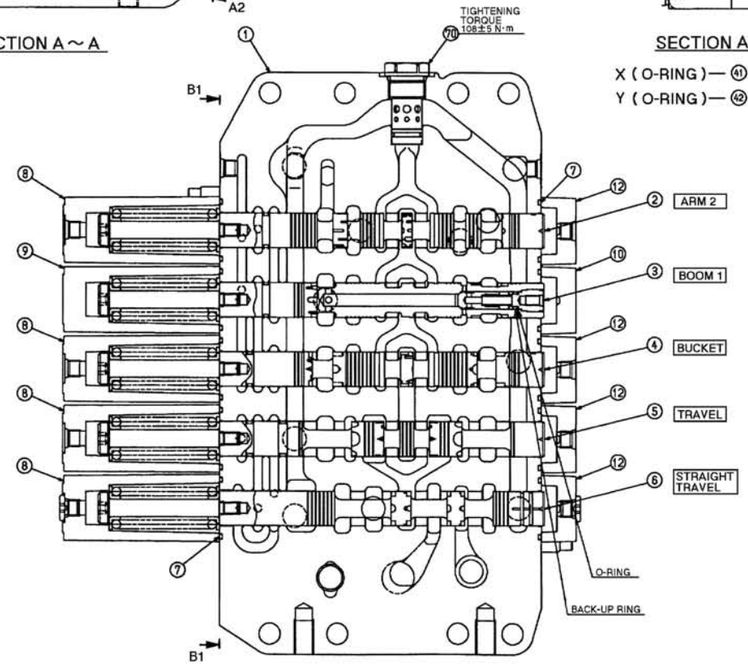

SECTION B ~ B

SECTION A2 ~ A2

X (O-RING) — ㊶ (1 PLACE)
Y (O-RING) — ㊷ (1 PLACE)

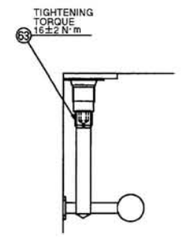

SECTION A1 ~ A1

SECTION M ~ M

V (O-RING) — ㊺ (14 PLACES)
W (O-RING) — ㊻ (7 PLACES)

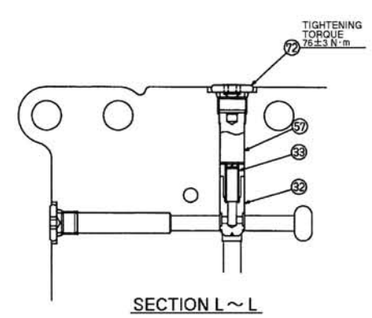

SECTION L ~ L

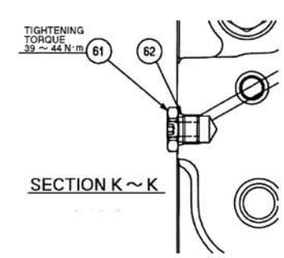

SECTION K ~ K

https://truckmanualshub.com/

Reference Diagram 3/3

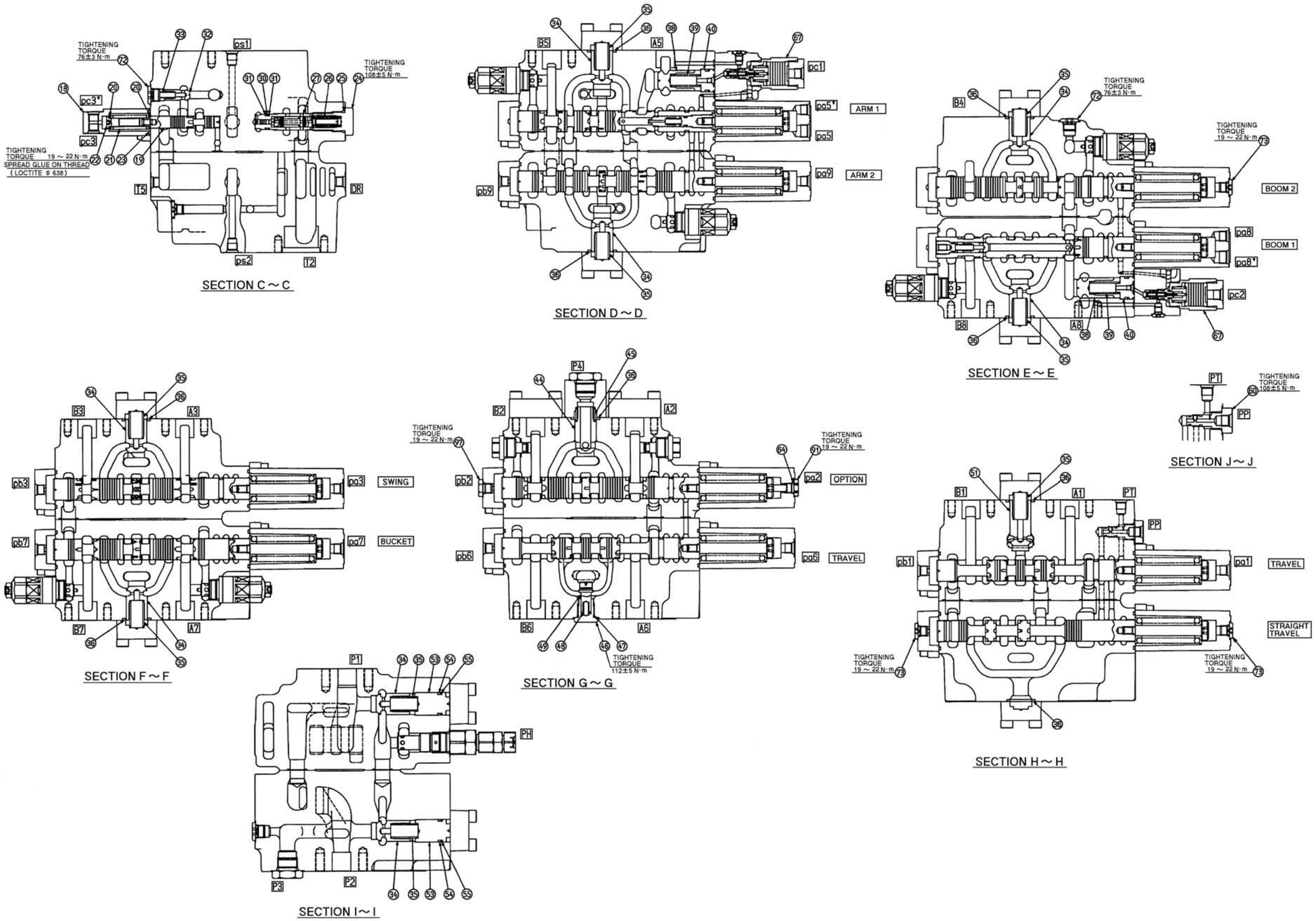

https://truckmanualshub.com/

Service Parts

1. Reference No. 2: Spool Assembly

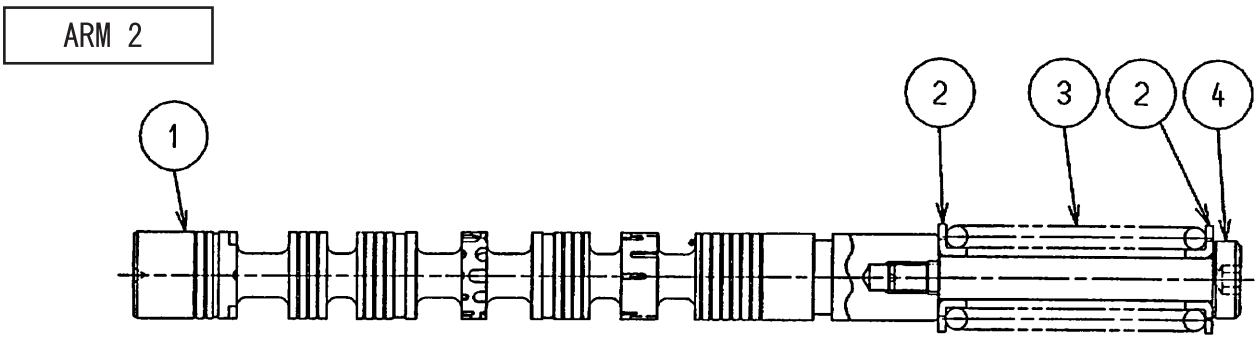

ITEM NO.	PART NAME	QTY.
1	SPOOL	1
2	SPRING SEAT	2
3	SPRING	1
4	SPOOL END	1

2. Reference No. 3: Spool Assembly

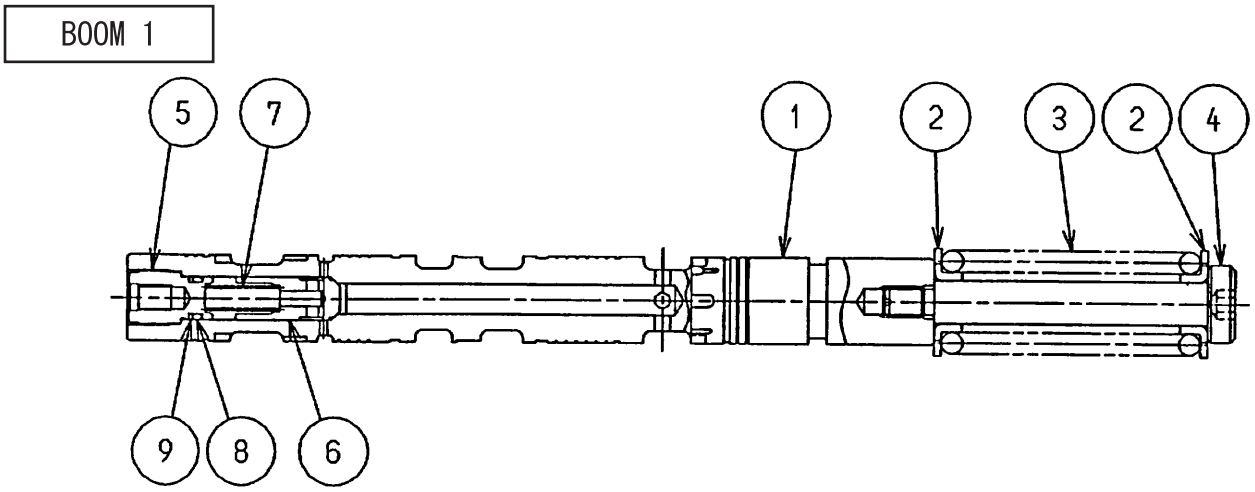

ITEM NO.	PART NAME	QTY.
1	SPOOL	1
2	SPRING SEAT	2
3	SPRING	1
4	SPOOL END	1
5	PLUG	1
6	POPPET	1
7	SPRING	1
8	O-RING	1
9	BACKUP RING	1

https://truckmanualshub.com/

3. Reference No. 4: Spool Assembly

BUCKET

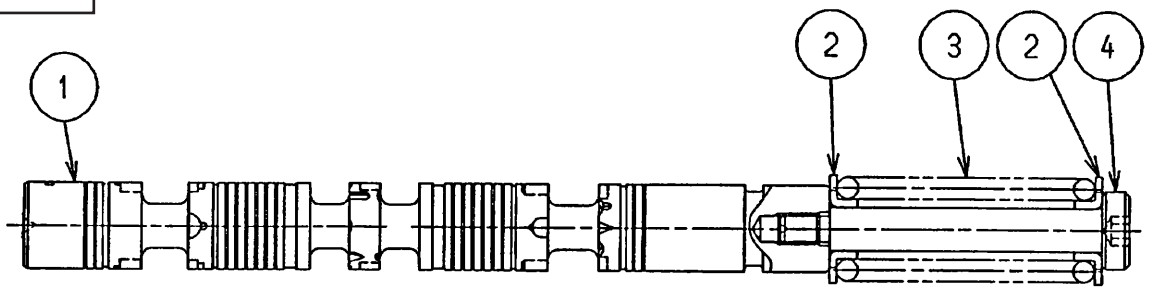

ITEM NO.	PART NAME	QTY.
1	SPOOL	1
2	SPRING SEAT	2
3	SPRING	1
4	SPOOL END	1

4. Reference No. 5: Spool Assembly

TRAVEL

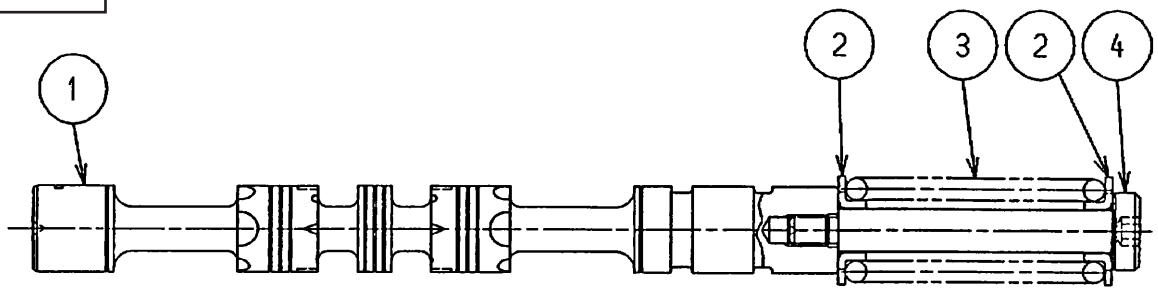

ITEM NO.	PART NAME	QTY.
1	SPOOL	1
2	SPRING SEAT	2
3	SPRING	1
4	SPOOL END	1

https://truckmanualshub.com/

5. Reference No. 6: Spool Assembly

STRAIGHT TRAVEL

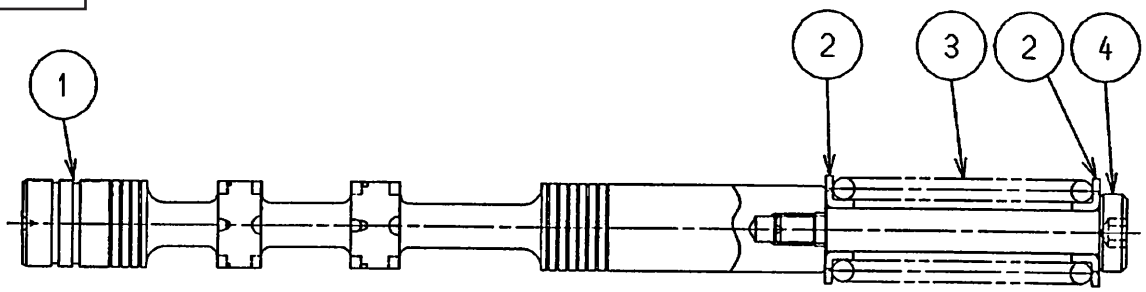

ITEM NO.	PART NAME	QTY.
1	SPOOL	1
2	SPRING SEAT	2
3	SPRING	1
4	SPOOL END	1

6. Reference No. 14: Spool Assembly

ARM 1

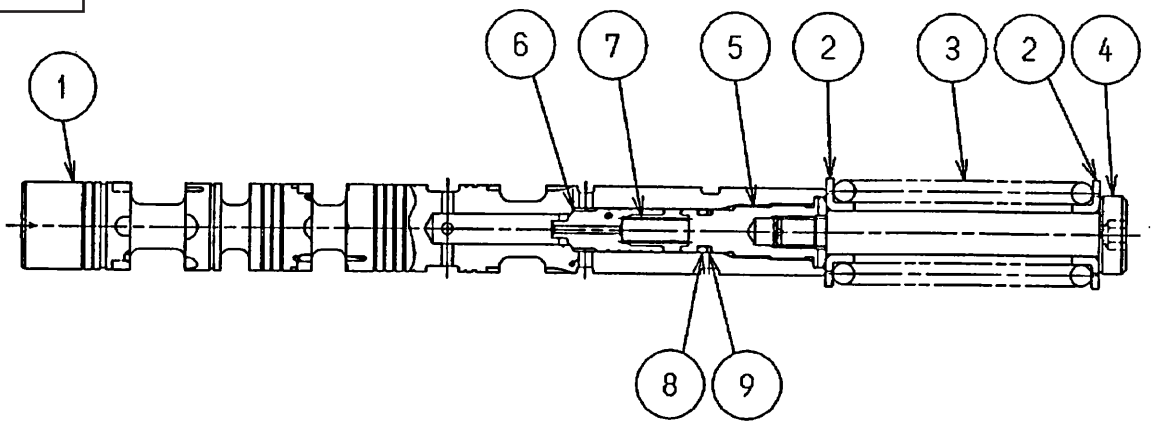

ITEM NO.	PART NAME	QTY.
1	SPOOL	1
2	SPRING SEAT	2
3	SPRING	1
4	SPOOL END	1
5	PLUG	1
6	POPPET	1
7	SPRING	1
8	O-RING	1
9	BACKUP RING	1

https://truckmanualshub.com/

7. Reference No. 15: Spool Assembly

BOOM 2

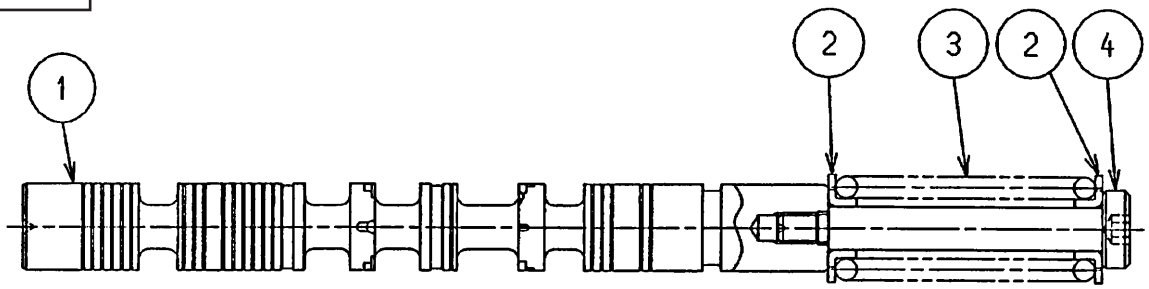

ITEM NO.	PART NAME	QTY.
1	SPOOL	1
2	SPRING SEAT	2
3	SPRING	1
4	SPOOL END	1

8. Reference No. 16: Spool Assembly

SWING

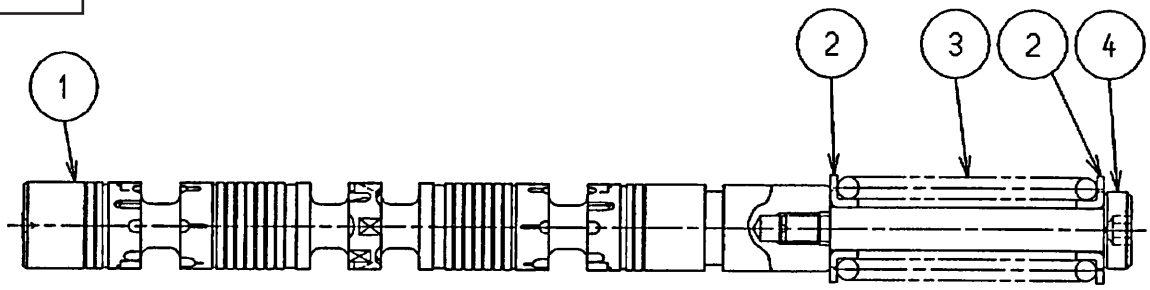

ITEM NO.	PART NAME	QTY.
1	SPOOL	1
2	SPRING SEAT	2
3	SPRING	1
4	SPOOL END	1

https://truckmanualshub.com/

9. Reference No. 17: Spool Assembly

BACKUP

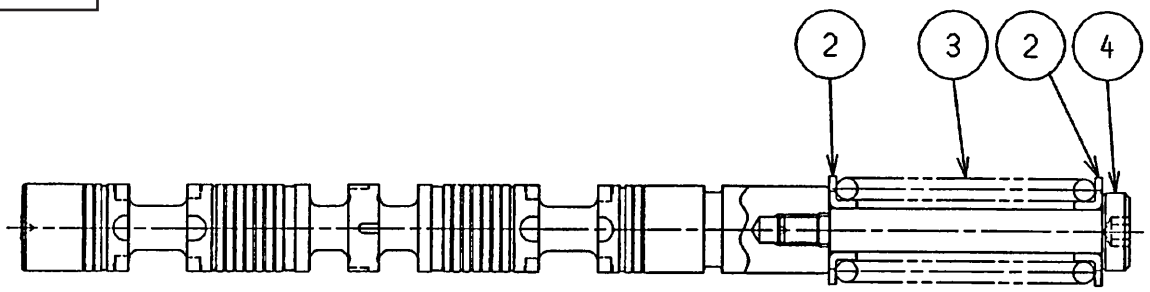

ITEM NO.	PART NAME	QTY.
1	SPOOL	1
2	SPRING SEAT	2
3	SPRING	1
4	SPOOL END	1

10.Reference No. 27: Spool Assembly

ARM REGENERATION RELEASE

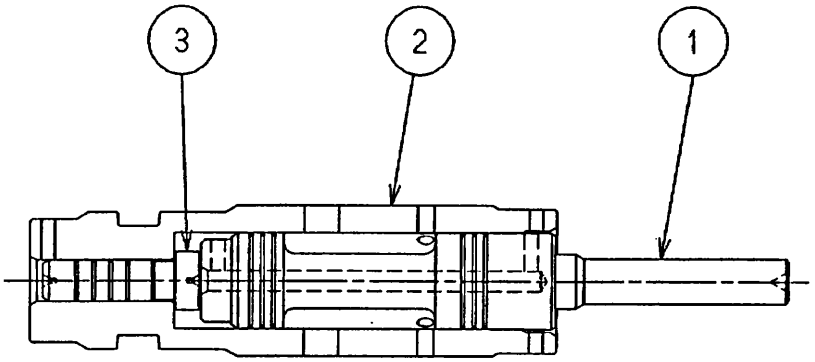

ITEM NO.	PART NAME	QTY.
1	SPOOL	1
2	SLEEVE	1
3	PISTON	1

https://truckmanualshub.com/

11.Reference No. 40: Spacer Assembly

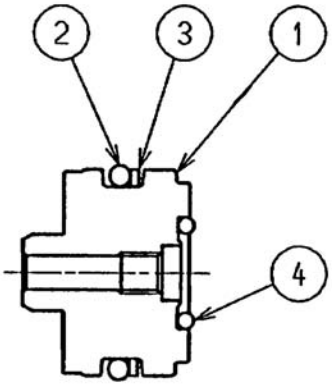

ITEM NO.	PART NAME	QTY.
1	SPACER	1
2	O-RING	1
3	BACKUP RING	1
4	O-RING	1

12.Reference No. 60: Plug Assembly

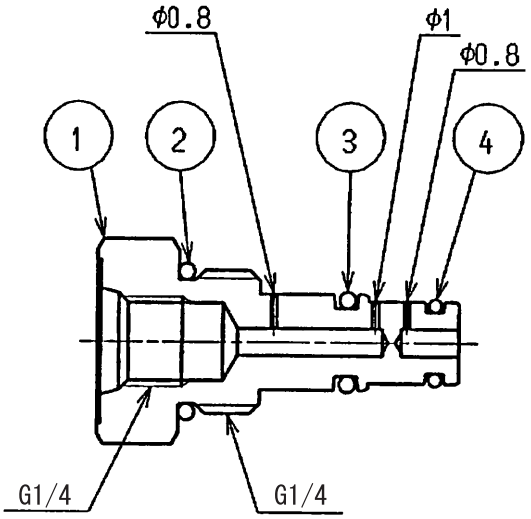

ITEM NO.	PART NAME	QTY.
1	PLUG	1
2	O-RING	1
3	O-RING	1
4	O-RING	1

https://truckmanualshub.com/

13.Reference No. 67: Anti-drift Valve Assembly

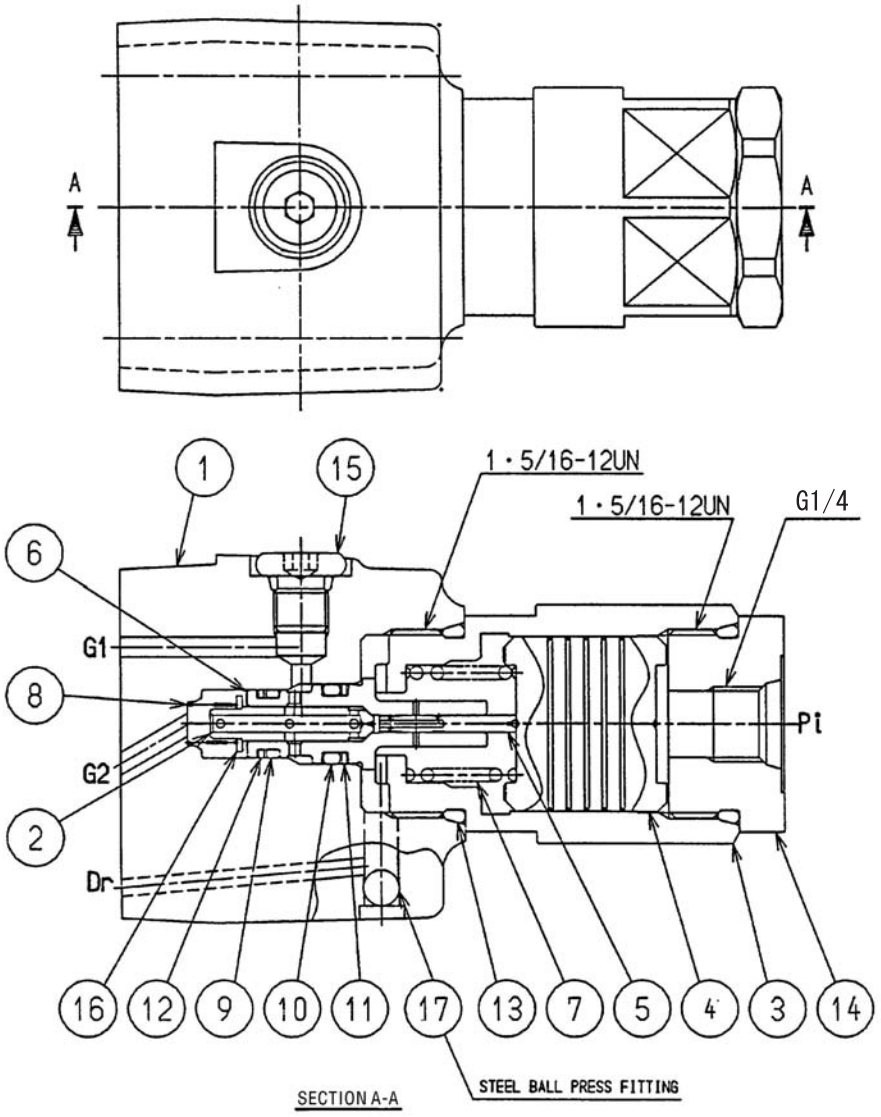

ITEM NO.	PART NAME	QTY.
1	BODY	1
2	POPPET	1
3	PLUG	1
4	PISTON	1
5	SPOOL	1
6	SLEEVE	1
7	SPRING	1
8	SPRING	1
9	O-RING	1
10	O-RING	1
11	BACKUP RING	1
12	BACKUP RING	1
13	O-RING	1
14	PLUG ASSEMBLY	1
15	PLUG ASSEMBLY	1
16	SPRING SEAT	1
17	STEEL BALL	1

https://truckmanualshub.com/

14.Reference No. 68: Relief Valve Kit

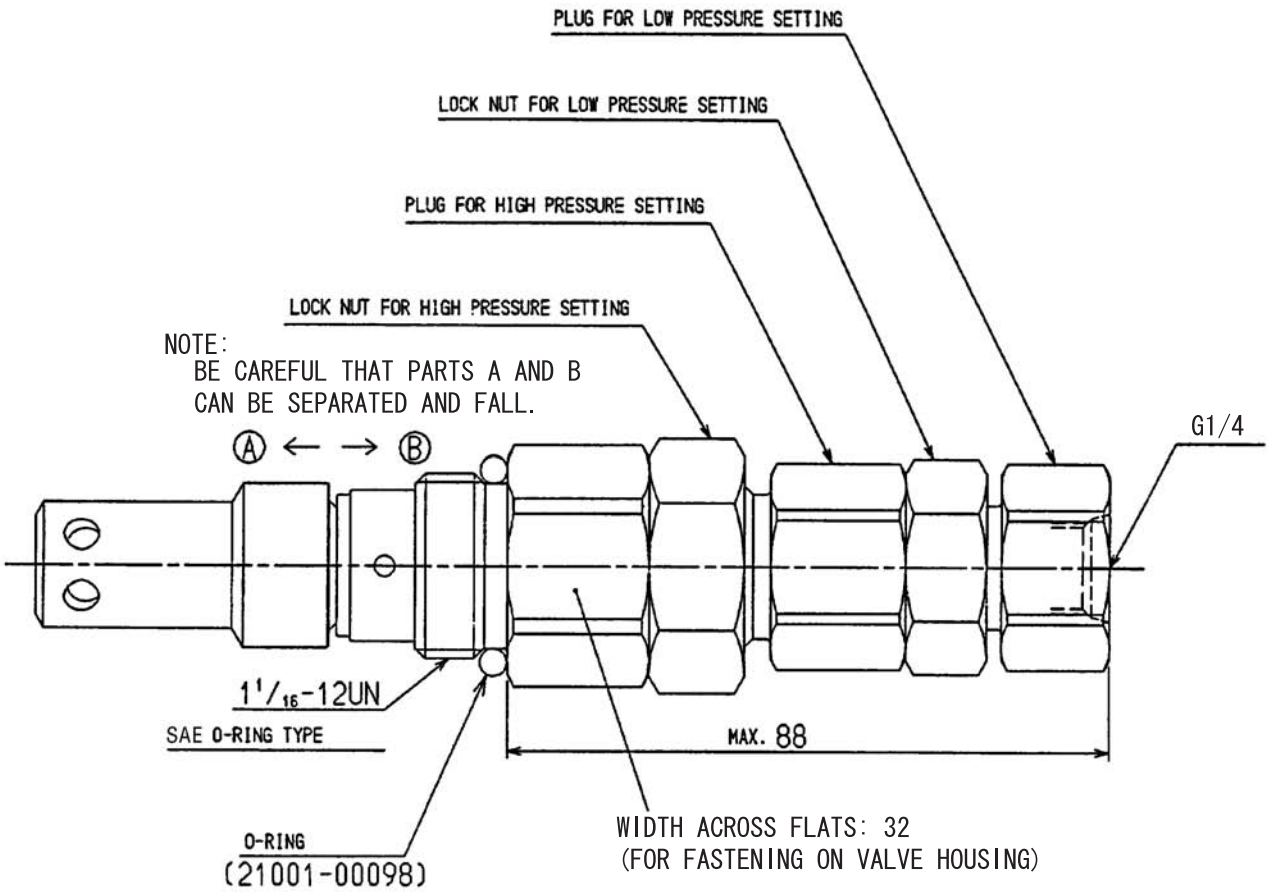

RELIEF VALVE SET PRESSURE MPa	FLOW L/min
HI: 37.3 ± 0.5	165
LO: 34.3 ± 0.3	190

https://truckmanualshub.com/

15.Reference No. 69: Relief Valve Kit

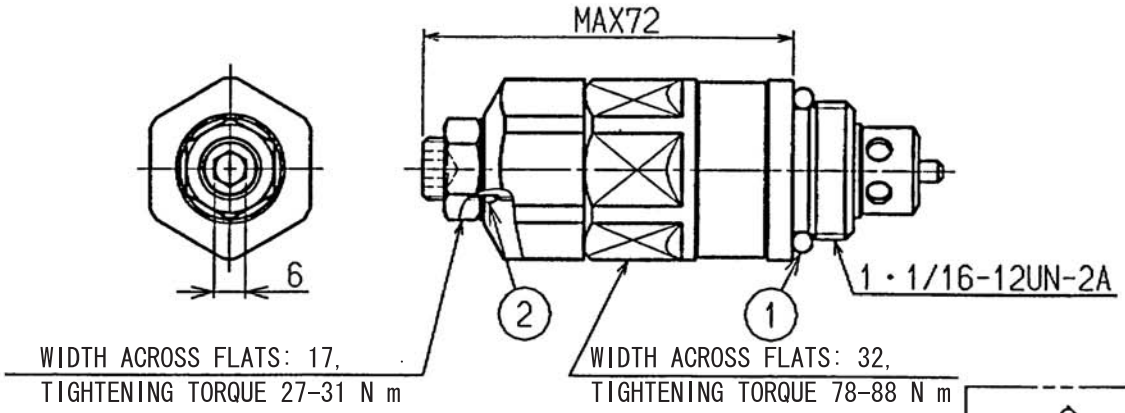

REFERENCE No.	RELIEF VALVE SET PRESSURE MPa	SETTING FLOW L/min
69-1	39.2 ± 0.5	20
69-2	27.4 ± 0.5	20

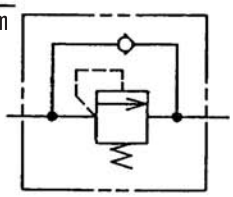

RELIEF VALVE SYMBOL

・PRESSURE ADJUSTMENT RANGE: 20.6 TO 39.2 MPa
・CHANGE RATE OF PRESSURE PER TURN: APPROX. 21.2 MPa (VARIABLE)

ITEM NO.	PART NAME	QTY.
1	O-RING	1
2	O-RING	1

https://truckmanualshub.com/

16.Reference No. 70: Relief Valve Assembly

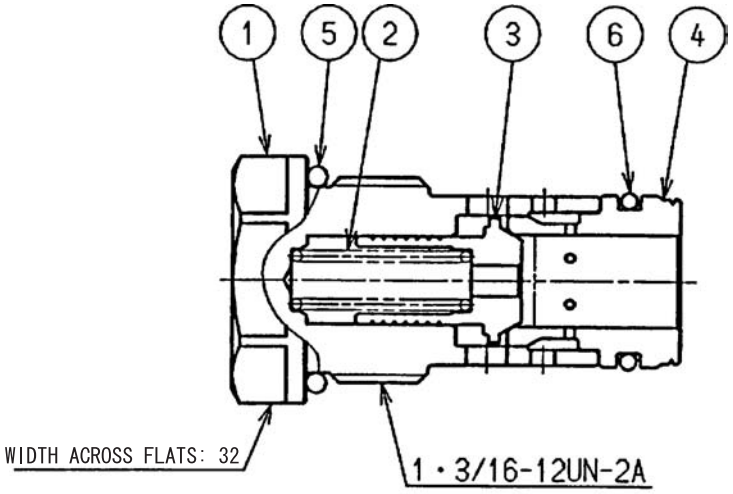

ITEM NO.	PART NAME	QTY.
1	PLUG	1
2	SPRING	1
3	POPPET	1
4	SLEEVE	1
5	O-RING	1
6	O-RING	1

17.Reference No. 87: Plug Assembly

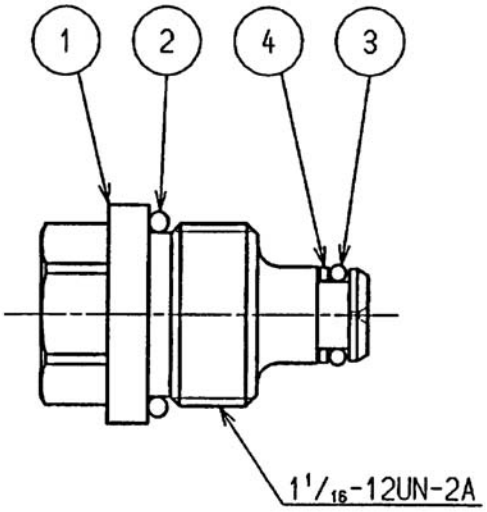

ITEM NO.	PART NAME	QTY.
1	PLUG	1
2	O-RING	1
3	O-RING	1
4	BACKUP RING	1

https://truckmanualshub.com/

	330-7-05-01-37
Cylinder	Page No. 1 / 3
	Second Edition : 08/2006

Structural Drawings

1. Boom Cylinder

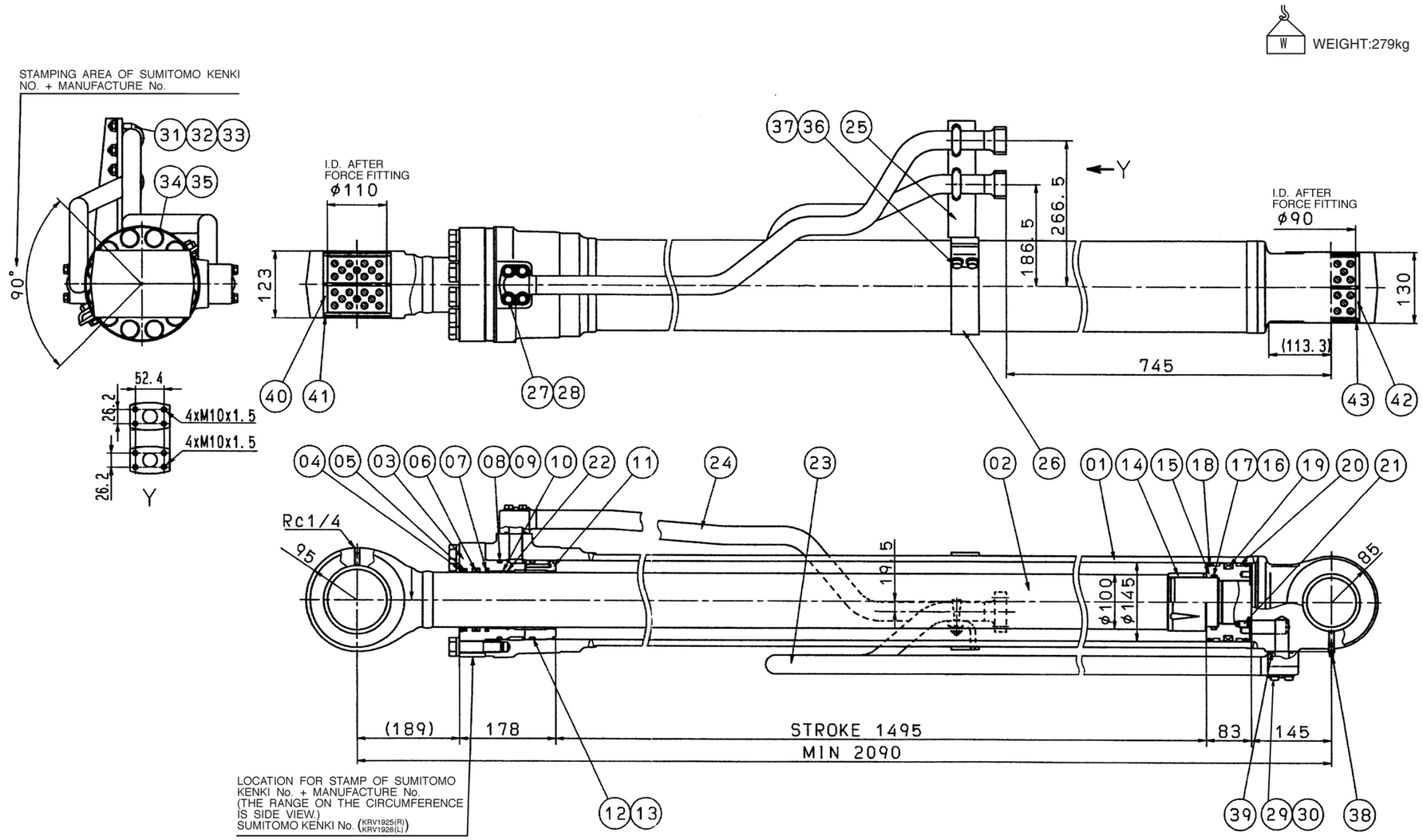

BOOM CYLINDER
KSV1925 / KSV1926

No.	PART NAME	QTY
01	CYLINDER	1
02	ROD	1
03	CYLINDER HEAD	1
04	SNAP RING	1
05	DUST SEAL	1
06	ROD PAKING	1
07	BUFFER RING	1
08	BACKUP RING	1
09	O-RING	1
10	BUSHING	1
11	COLLAR	1
12	BACKUP RING	2
13	O-RING	1
14	PLUNGER	1
15	PISTON	1
16	BACKUP RING	2
17	O-RING	1
18	RING	2
19	PISTON RING	1
20	WEAR RING	2
21	SCREW	1
22	SNAP RING	1
23	TUBE	1
24	TUBE	1
25	BRACKET	1
26	BAND	1
27	BOLT	4
28	WASHER	4
29	BOLT	4
30	WASHER	4
31	CLIP	2
32	NUT	4
33	WASHER	4
34	BOLT	12
35	WASHER	12
36	BOLT	4
37	WASHER	4
38	FITTING	1
39	O-RING	2
40	BUSHING	1
41	DUST SEAL	2
42	BUSHING	1
43	DUST SEAL	2

https://truckmanualshub.com/

2. Arm Cylinder

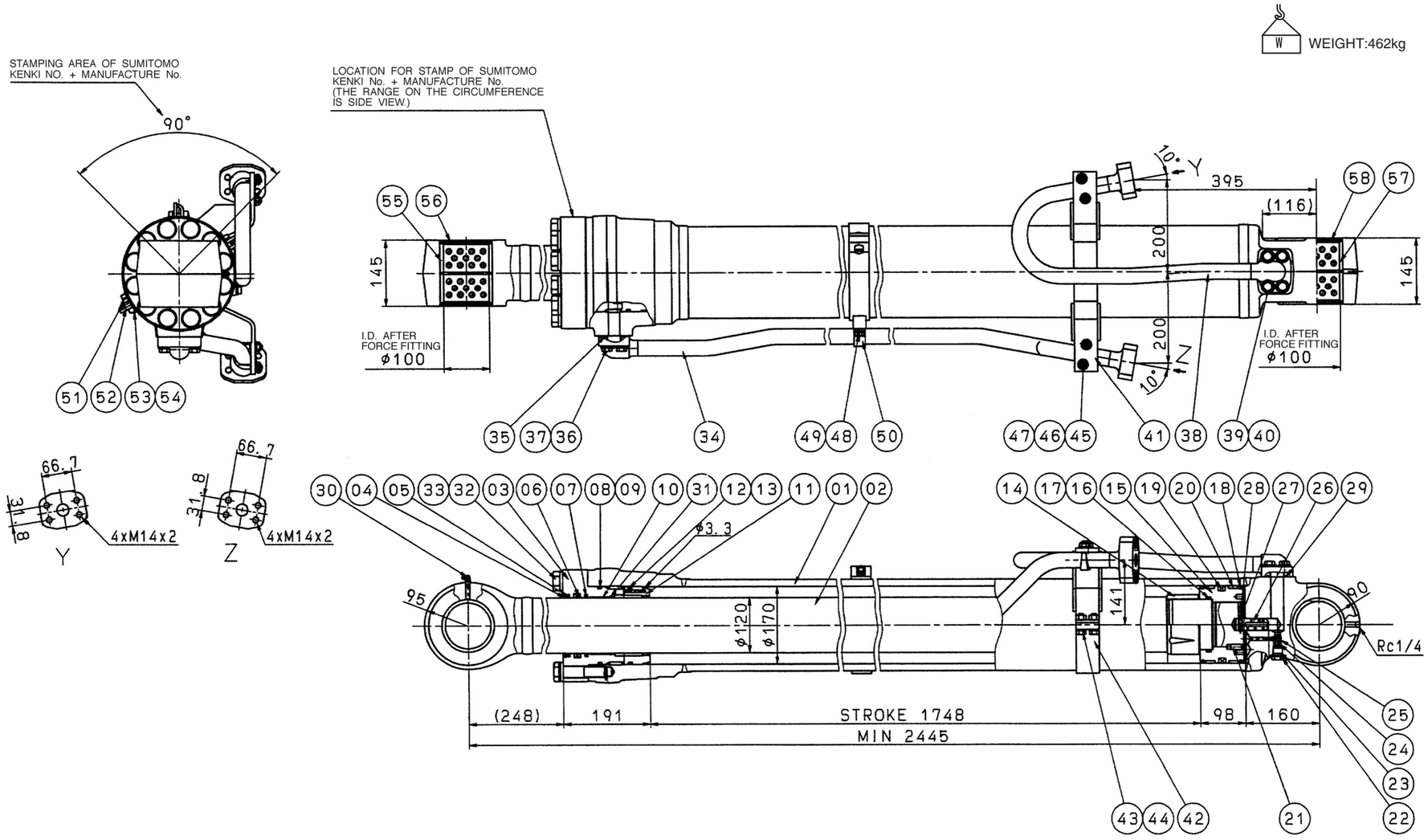

ARM CYLINDER
KSV1927

No.	PART NAME	QTY
01	CYLINDER	1
02	ROD	1
03	CYLINDER HEAD	1
04	SNAP RING	1
05	DUST SEAL	1
06	ROD PAKING	1
07	BUFFER RING	1
08	BACKUP RING	1
09	O-RING	1
10	BUSHING	1
11	COLLAR	1
12	BACKUP RING	2
13	O-RING	1
14	PLUNGER	1
15	PISTON	1
16	BACKUP RING	2
17	O-RING	1
18	RING	2
19	PISTON RING	1
20	WEAR RING	2
21	SCREW	1
22	PLUG	1
23	O-RING	1
24	SPRING	1
25	VALVE	1
26	PLUG	1
27	PLUNGER	1
28	BALL	12
29	CAP	1
30	O-RING	1
31	FITTING	1
32	SNAP RING	1
33	BOLT	12
34	WASHER	12
35	TUBE	1
36	O-RING	1
37	PLUG	1
38	O-RING	1
39	BACKUP RING	1
40	O-RING	1
41	BOLT	6
42	PLUG	1
43	PLATE	1
44	BOLT	1
45	WASHER	1
46	TUBE	1
47	BOLT	4
48	BRACKET	1
49	BAND	1
50	BOLT	4
51	CLIP	2
52	NUT	4
53	WASHER	4
54	BOLT	2
55	CLAMP	1
56	BAND	1
57	BRACKET	1
58	BOLT	2

https://truckmanualshub.com/

3. Bucket Cylinder

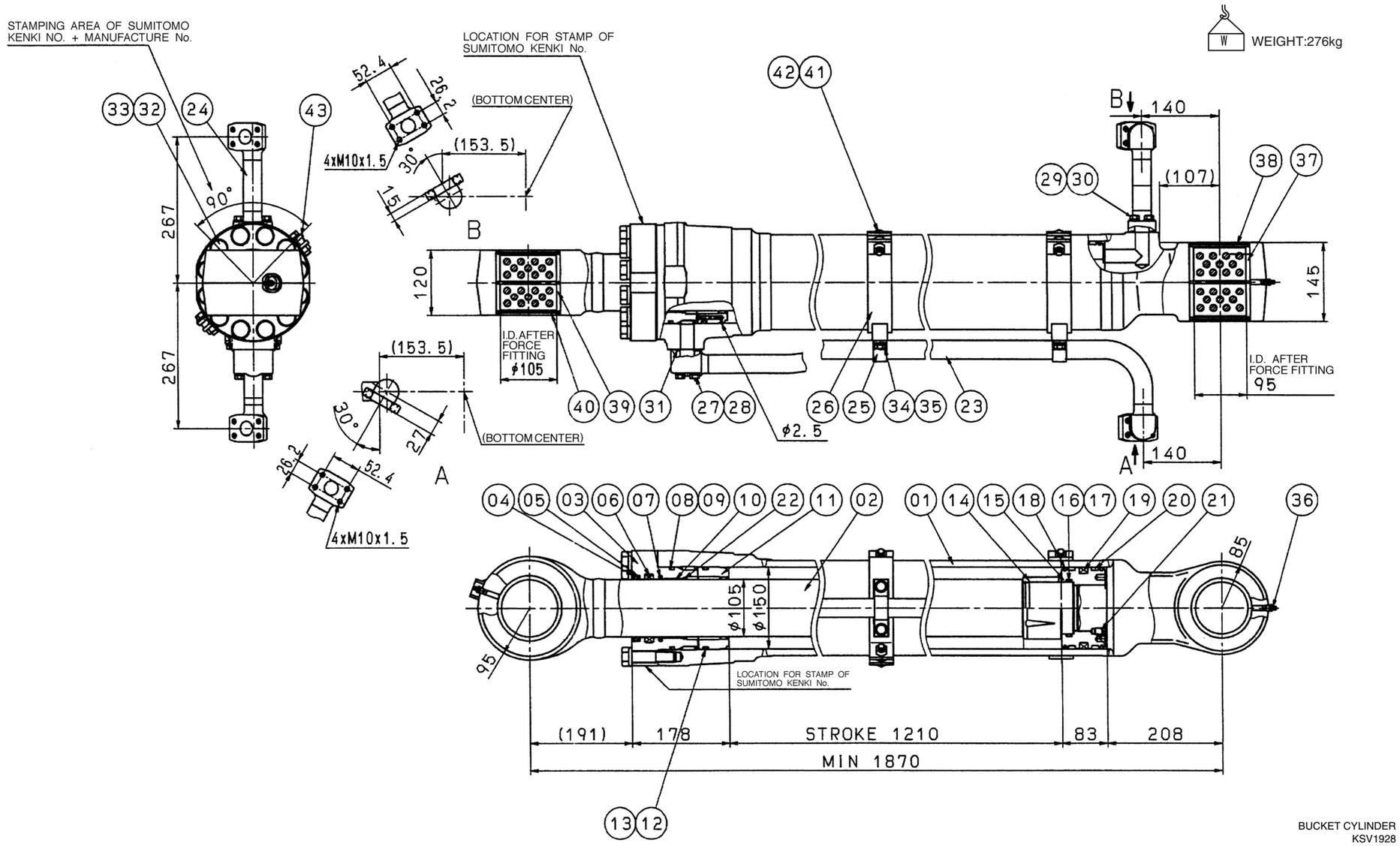

No.	PART NAME	QTY
01	CYLINDER	1
02	ROD	1
03	CYLINDER HEAD	1
04	SNAP RING	1
05	DUST SEAL	1
06	ROD PAKING	1
07	BUFFER RING	1
08	BACKUP RING	1
09	O-RING	1
10	BUSHING	1
11	COLLAR	1
12	BACKUP RING	2
13	O-RING	1
14	PLUNGER	1
15	PISTON	1
16	BACKUP RING	2
17	O-RING	1
18	RING	2
19	PISTON RING	1
20	WEAR RING	2
21	SCREW	1
22	SNAP RING	1
23	TUBE	1
24	TUBE	1
25	CLAMP	2
26	BRACKET	2
27	BOLT	4
28	WASHER	4
29	BOLT	4
30	WASHER	4
31	O-RING	2
32	BOLT	12
33	WASHER	12
34	BOLT	4
35	WASHER	4
36	FITTING	2
37	BUSHING	1
38	DUST SEAL	2
39	BUSHING	1
40	DUST SEAL	2
41	BOLT	4
42	WASHER	4
43	BAND	2

https://truckmanualshub.com/

Maintenance Instructions

1. Description of Functions

(1) Basic functions

The hydraulic piston system is a kind of hydraulic actuator which converts hydraulic energy supplied from the hydraulic pump into a larger force for linear movement via a piston. In addition, it switches its operational direction between extension and retraction by way of lever operation on the hydraulic oil direction switch-over valve.
This larger force, linear movement, and operational direction switching over are the basic functions.

(2) Function by section

[1] Cylinder head assembly
The piston assembly has a bearing function for the piston rod (16) provided by means of bushing (05) press fitted into the inside surface of cylinder head (17). It prevents external oil leakage by means of a buffer ring (03), Rod packing (04) inserted into the inside surface of cylinder head. It also prevents dust from the outside by means of a dust seal (02) press fitted into the inside surface of the cylinder head.
Engaging with the plunger (12) at the cylinder's most extended position, it generates high pressure in the cushion chamber and this softens the cylinder's impact at the most extended position.
In addition, it also supplies and drains high-pressure oil from the inside of cylinder tube to the ports.

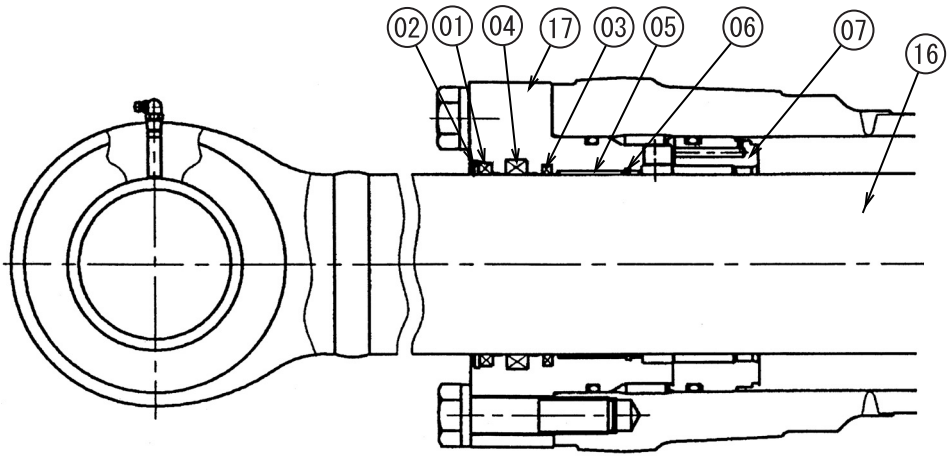

Bushing (05)
The bushing is press fitted into the inner face of the cylinder head and is in contact with the piston rod. It reduces eccentricity, which adversely affects the seal performance, by sharing lateral load applied on the cylinder together with the slide ring located on the outer circumference of the piston, performing high-bearing linear motion against the piston rod, as well as supporting one end of the piston rod.
Buffer ring (03)
The buffer ring is located between the rod packing and bushing. It prolongs the life of the rod packing, which is the main seal, by relieving high pressure with the auxiliary seal which is directly in contact with the high pressure oil in the cylinder, and reducing the load acting on the rod packing.
Rod packing (04)
The rod packing is located between the dust seal and the buffer ring. The rod packing seals the annular space formed between the piston rod and cylinder head against the pressure oil between the rod packing and the backup ring. It also forms suitable oil films on the piston rod to prevent rust.

https://truckmanualshub.com/

Dust seal (01)
The dust seal is located at the opening end where the piston rod enters into and exits from the cylinder. It prevents dust and water from entering into the rod seal section of the rod packing and the buffer ring in the cylinder from the outside. It also scrapes off mud attached on the surfaces of piston rod through piston rod movements.

[2] Piston assembly
The piston assembly prevents pressure oil from leaking from one chamber to the other chamber by the insertion of piston ring (08) in the center of the piston. It has a bearing function to receive lateral cylinder load by the insertion of the wear ring (09) on both ends of the piston ring. It also has a bearing function and a function to capture contaminants by the insertion of ring (10) in the outer side.
Piston ring (08)
The sealing, which is located at the center of the piston, seals the annular space formed between the piston and cylinder tube. It divides into high pressure and low pressure chambers by using the piston as a boundary.
Ring (09) and (10)
The wear rings are located at both ends of the piston ring and are in contact with the inner surface of the cylinder tube. They reduce eccentricity, which adversely affects the seal performances, by sharing lateral load applied on the cylinder together with the bushing located on the inner surface of the cylinder head. They also perform high-bearing linear motion against the cylinder tube inner surface, as well as supporting one end of the piston rod. The ring (10) submerges and captures contaminants engaged between the cylinder tube and the wear ring.

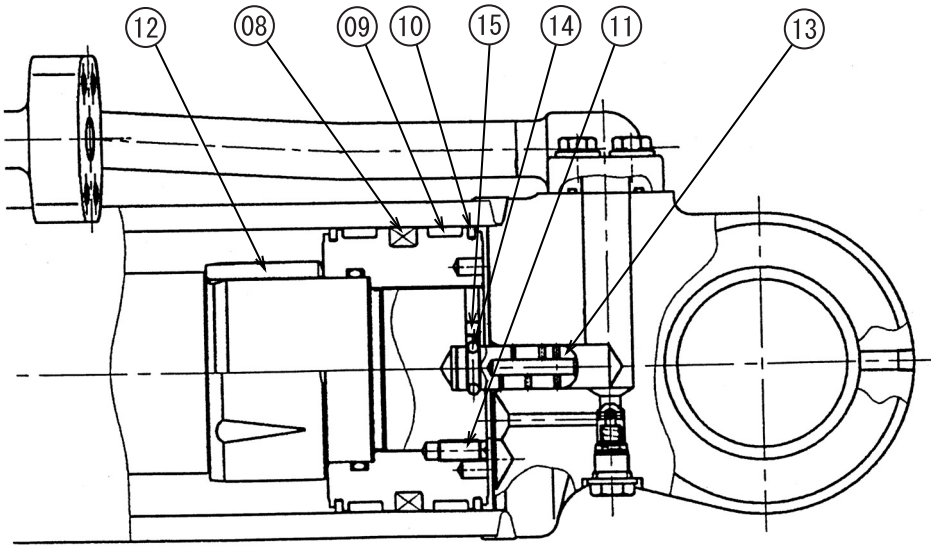

Screw (11)
Screw prevents the piston from turning.
Plunger (13)
It generates high pressure in the cushion chamber and this softens the cylinder's impact at the most shorten position.
Ball (14)
Ball is an omission stop of plunger. Moreover, eccentric of plunger is prevented.
Cap (15)
Cap prevents the ball from coming off.

https://truckmanualshub.com/

[3] Pipes (A) and (B)

A pair of pipes are located on each port on the extension and retraction side on the cylinder tubes (1). The pipes supply and drain high-pressure oil from the flexible hose connection end to the cylinder tube port.

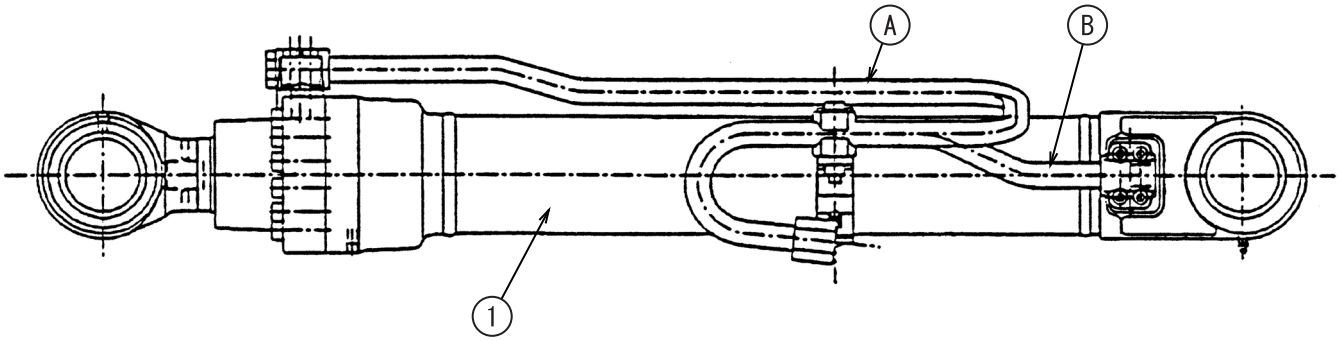

2. Precautions for Handling: Cautions

(1) When installing the cylinder on the machine

※ **When installing the cylinder onto the machine, lift the cylinder while ensuring its safety.**

Lifting the cylinder by its piping section is not only dangerous but also may cause damage to the cylinder.
Fix the rod at its most retracted position by using a band or the like. Otherwise, the rod can pop out. In addition, the damaged rod could be unusable.

※ **Welding after installing cylinder may cause serious damage to the cylinder.**

Electric welding on the cylinder and even at a location far from the cylinder may cause sparks in the cylinder, resulting in the need for cylinder replacement.

※ **When painting the machine, use masking tape on the cylinder.**

If the cylinder is operated when there is paint on the rod surface and dust seal, the dust seal will not work correctly, and contaminants and paints easily get into the cylinder, which may lead to damage to seal parts or extreme shortening of the life of cylinder.

※ **Clean the cylinder before installing.**

(1) Precautions for use

※ **Use them under specified conditions.**

If you use hydraulic oil other than the specified one, sealing parts could deteriorate very quickly, leading to breakage.
Setting the relief valve at a higher value than shown in the assembly drawing is dangerous because it may result in damage to the cylinder.
General sealing materials are damaged quickly under high temperatures (approximately 100×C or higher) and cold temperatures (-30×C or colder).
In this case, as special seals are required, please confirm the suitability of the seal with your cylinder.
The first major cause of cylinder defaults is oil leakage caused by damaged rods.
Careful operating is needed to avoid damage.

※ **Before operating, warm the cylinder fully.**

If the cylinder has been used for a long time, the seal parts in cylinder become stuck with metal on the sliding surface. Avoid sudden operations under maximum pressure, at high speeds.
If the cylinder is brand new or has been left without being operated for a long time, a lot of air has accumulated and prevents smooth movement of the cylinder.
Furthermore, pressuring quickly without bleeding causes heat due to air adiabatic compression, which burns and carbonizes the sealing parts. As a result, the performance can be significantly reduced.
Before starting the operation, move the cylinder slowly several times without load at full stroke to

https://truckmanualshub.com/

remove air from the inside of the cylinder.

※ **Keep a safe fixed position when temporarily stopping or storing.**

Cylinders cannot be kept in a given position for a long time while attached to the machine.
Cylinder oil leaks and the volume of the hydraulic oil in the cylinder may change due to the changes in hydraulic oil temperature. As a result, the extended or retracted cylinder may make the machine move unexpectedly. This is a very dangerous situation.
Always temporarily stop or store the cylinder in a safe fixed position.

※ **At first stage of operation, please draw out the residual air, which is inside of the cylinder assembly.**

If there is residual air and press it rapidly, seals and packing may be burnt by "diesel effect".
Deairation must be performed completely as follows.

[1] In the first operation after assembling
[2] At first operation equiped it other machine
[3] In case of aeration reassembling tubes

How to deairation

[1] Reduce oil pressure (Engine: Low rotating speed)
[2] Operate hydraulic cylinder 4 to 5 times, stopping 20-30mm from stroke end
[3] Next operate cylinder 3 to 4 times to stroke end

(2) Maintenance and inspection precautions

Always conduct daily maintenance and inspections.

"Daily maintenance and inspections" are the key to maintaining and proloning the full performance of the cylinder.
Follow 4. Maintenance/Inspections and Servicing to achieve full performance. Always remove mud, water, dust and grease attached to the rod.
Wipe off the dust seal and sealing sections with a cloth instead of washing with water.
If leaving without being used for a week or longer, apply corrosion inhibitor to the surface of the rod for rust proofing.

For part replacement, use SUMITOMO parts.

If you use parts other than SUMITOMO parts, you may not gain the expected full performance.
It is recommended that you always use SUMITOMO parts.
We also manufacture dedicated jigs designed to make it possible to perform disassembling and reassembling work safely and quickly.

※ **Special care should be also directed to disassembling and reassembling.**

It is particularly dangerous to disassemble the cylinder head while it is still attached to the machine because the machine may move unexpectedly. Always disassemble the cylinder after dismounting it from the machine.
If you reassemble the cylinder with dirty hands, contaminants may get into the cylinder. This shortens life and also damage other hydraulic devices. Try to reassemble cylinders under clean conditions.
Tighten threaded parts by following and using tightening torque shown in the drawing.
Too high and too low torque may damage screws.

Observe the cylinder storing standards.

https://truckmanualshub.com/

3. Maintenance/Inspection and Servicing

To gain full functions of hydraulic cylinder for a long time, conduct periodic inspections and servicing based on the inspection table below.
Repair faulty sections as soon as possible.

※ Note: When conducting routine inspections and servicing, the first priority should be placed on the operator's safety. Conduct the operation using common knowledge and expertise.

Locations for inspection/ servicing	Inspecting and servicing points	Daily	Monthly	Annually	Notes
Appearance	Is cylinder clean (especially sliding part of the rod)?	○			
	Is there any oil leakage from the piping fitting part?		○		
	Is there any paint peeling, scaling or rust?	○			
Operation	Is movement smooth? Any abnormal noises?	○			
	Is response good?	○			
	Is there any oil leakage from the sliding parts?	○			
	Is there any internal leakage?			○	
	Is working pressure normal?		○		
	Is set pressure on over load relief valve normal?		○		
Hydraulic oil	Is the hydraulic oil dirty or deteriorated?		○		
	Is the hydraulic oil changed regularly?			○	
	Are filters changed regularly?		○		
Fitting section onto the main machine	Is there enough grease on the pins?		○		
	Do the pins make noise or seize up?	○			
	Is there any looseness or wear on the pins?	○			
	Are the pin seals normal?		○		
	Are there any loose or missing screws?	○			
	Retighten fitting screws.			○	
Piston rod	Is there any wear on sliding parts?			○	If the sliding part of the rod is exposed for a long time, apply corrosion inhibitor.
	Are there any scratches or dents on the sliding parts?	○			
	Is plating scraped off on the sliding part?	○			
	Are any sliding parts bent?		○		
	Are there any cracks on or damage to welded parts?	○			
Cylinder tubes (including piping)	Are any bolts, nuts (screws) loose?	○			
	Retighten bolts and nuts (screws).			○	
	Are there any cracks on or damage to welded parts?	○			
	Are there any cavity or dents on the tube?	○			

https://truckmanualshub.com/

4. Error Diagnosis

(1) Hydraulic cylinder errors and their remedy measures

It is not easy to locate faulty parts. General symptoms, possible reasons and remedy measures are shown in the table below. For repairs, refer to the possible causes and remedy measures in the table.
However, it is often the case that machine troubles occur because not only one part but many other relating parts have problems.
Measures other than ones shown in the table may be required.

Item	Symptom
1	Oil leakage on the sliding section of piston rod.
2	Oil leakage from cylinder head fitting section
3	Oil leakage from welded section between pipe and cylinder tube
4	Bad operation

Item	Symptom	Related parts	Error Item	Preventive/remedy measures
1	Oil leakage on piston rod sliding section	Piston rod	Scratches and rust caught by claws on the sliding surface	1. Remove scratches with oilstone and smooth the sliding surfaces (less than 1.5s). If the oil leakage persists after smoothing the rod surfaces, disassemble and inspect the rod because of possible damage in the U-ring caused by the scratches. 2. If scratches and rust are too widespread to repair, replace piston rod and seals such as buffer ring, dust seal, etc. and piston rod bearing materials.
			Plating is flaking	1. Re-plate or replace piston rod. 2. At this time, check seals and piston rod bearing materials, and if damage is found, replace them.
		Rod packing	Foreign substances engaged in the inside and outside surfaces	1. Remove foreign substances. 2. If a packing is damaged, replace it.
			Scratches on inside and outside surfaces	Replace.
			Lips and grooves are locally carbonized (burned).	1. Regarded as burning damage by air adiabatic compression caused by remaining air in the cylinder. 2. Perform initial operation at low pressure and low speed to bleed air fully after changing packing.

https://truckmanualshub.com/

Item	Symptom	Related parts	Error Item	Preventive/remedy measures
1	Oil leakage on piston rod sliding section	Rod packing	Packing has lost rubber elasticity and is crumbling. The whole lip is also missing.	1. Replace. 2. The life of the packing or hydraulic oil deterioration or high temperature may be the cause. 1) Change hydraulic oil. 2) Check hydraulic oil temperature. (The oil temperature should be 80×C or less.) 3) Check for uneven hot temperatures.
			Heel part of the packing. Too much extrusion	1. Replace. 2. Abnormal high pressure may act on the packing. 1) Check the pressure when starting operation. 2) Abnormality in the buffer ring if the buffer ring is attached. Inspect buffer rings.
		Dust seal	Foreign substances engaged in the lip	Remove foreign substances.
			The lip is damaged. Other abnormal damages	Replace.
		Bearing material (bushing)	Extreme wear, the clearance with piston rod exceeds the allowable maximum value (see 6-(3). Maintenance reference)	Replace.
			Significant damage in sliding surfaces	1. Replace. 2. Inspect the piston rod.
		Cylinder head	Scratches or rust in seal fitting area.	1. Remove scratches and rust with an oil stone. 2. If repair is not possible, replace the cylinder head.

https://truckmanualshub.com/

Item	Symptom	Related parts	Error Item	Preventive/remedy measures
2	Oil leakage from cylinder head fitting section	O-ring	Foreign substances on the inside and outside surfaces Damaged O-ring	1. Remove foreign substances. 2. If O-ring is damaged, replace it. 3. Inspect the tube inside: If scratches and rust are found, smooth the surfaces with oilstone. 4. Check O-ring grooves in the cylinder head: Same as above 5. Check Rod Packing: If distortion or extrusion is found, replace it.
		Rod Packing	Distortion and extrusion.	Replace with a new one.
		Cylinder head	Looseness	1. Disassemble cylinder head to check O-rings and Rod Packing. If damage is found, replace it. 2. Check tube and cylinder head threaded sections to ensure that there is no damage. If damage is found, replace it. 3. Upon completion of inspection, fasten with specified tightening torque. Refer to Tightening torque.
		Bolt	Looseness, extension and breakage	Replace all bolts and fasten them with specified tightening torque.
		Cylinder tubes	Abnormal swelling	Replace with new ones. Oil leakage on the fitting section may be caused by abnormally high pressure (including cushion pressure). Check for bulging, deformation and circuit pressure on the tubes.
3	Oil leakage from welded section between pipe and cylinder tube	Cylinder tube pipe (hollow piston rod)	Cracks on welded section	Replace with a new one. **※ CAUTION:** Cracks will progress and end up with breakage. • Breakage is a very dangerous condition. • If cracks are found, immediately stop the operation and replace the parts. • No effect can be gained if additional welding is performed on cracked surfaces.

https://truckmanualshub.com/

Item	Symptom	Related parts	Error Item	Preventive/remedy measures
4	Bad operation 4-1 Does not move smoothly	Piston rod, cyclinder tubes	Curved too much; exceeds specified curve distortion level. (For curve distortion, see the corresponding section in 6-(3). Maintenance reference)	Replace with a new one. Check seals and sliding materials also because they may be damaged. If abnormality is found, replace.
		Cylinder tubes	Dents	Replace with new ones. Same as above described, check seals and sliding materials.
		Piston rod, cylinder tubes, sliding materials	Abnormal wear and damage on the sliding parts Foreign substances engaged in the piston and cylinder head sliding parts	1. Replace with new ones. Same as above described, check seals and sliding materials. 2. Remove foreign substances. Same as above described, check seals and sliding materials.
	4-2 Internal oil leakage makes the piston rod extend or retract or fall abnormally while operating or can not give specified speed output.	Piston seal	Damage such as scratches and wear is found.	Replace with a new one. Also check the cylinder's inner face.
		Cylinder tubes	Scratches and rust on the inside surface.	1. Remove scratches and rust by honing or with oilstone to smooth the surfaces. If scratches are too big to repair, replace cylinder tubes with new ones. 2. Replace piston seals with new ones.
		Piston tightningt	Loose tightening	Fasten with specified tightening torque. Refer to Tightening torque.
		Valves	Leakage from valves	Check the valve leakage volume and repair if necessary.
		※ **CAUTION:** Hydraulic oil tends to expand and shrink according to changes in temperature and pressure. This also causes cylinders to extend and retract; therefore, we sometimes see this as internal oil leakage. Check internal oil leakage under a given pressure condition.		

https://truckmanualshub.com/

Item	Symptom	Related parts	Error Item	Preventive/remedy measures
4	4-3 Operation is not stable.	Air	Air remains in the cylinder.	1. Bleed air. 1) Cylinder without air bleeder: Bleed air by operating the cylinder several full strokes under low pressure and at a slow speed. 2) Cylinder with air bleeder: To prevent high temperature inside the cylinder, remove the load and loosen air bleeder to release air fully. When the cylinder stops suddenly, it can extend or retract to a certain extent. This phenomenon is caused by hydraulic oil compressibility. This phenomenon tends to occur especially on long stroke cylinders.
	4-4 Strong impact when switching over between extension and retraction	Pin bushing Pin	Too much clearance between the fitting section and pin bushing	Measure the dimensions of pin and pin bushing, replace the parts that exceed the measured dimensions.
	4-5 Cylinder sliding operation makes noise.	Lubrication	Lack of lubrication	Lubricate.
		Pin bushing Pin	Scuffing on fitting surfaces	Replace with a new one and lubricate.
	※ **CAUTION** Hydraulic oil tends to expand and shrink according to changes in temperature and pressure. This also causes cylinders to extend and retract; therefore, we sometimes see this as internal oil leakage. Check internal oil leakage under given temperature and pressure conditions.			

https://truckmanualshub.com/

5. Storage Standards

We take all possible measures at the time of shipping hydraulic cylinders. However, in order to avoid trouble when storing them, please handle them following the precautions below.

(1) Storing one unit only (as a general rule, store indoors)

Avoid a place with high temperature and high humidity or a place where corrosive gas or liquid is stored. Store the unit off the floor. To prevent condensation due to temperature difference, we conduct inspections by using test oil with a given volume of volatile corrosion inhibitor, retract the piston rod using super dry air (dew point 35×C), put caps when shipping.
Therefore, do not leave a cylinder with the cap removed or drain the remaining oil from the cylinder without clear intention.

Storage for more than 2 months	Storage for more than 6 months (3 months for single-acting cylinder)	Storage for more than one year
1. Clean dust from the cylinder and apply corrosion inhibitor to flange section, piston rod and other locations that rust easily.	1. Using clean hydraulic oil, let the cylinder reciprocate to introduce corrosion inhibitor into the cylinder following the steps described in the left column for 2 month storage.	1. As packing may be deteriorated, it is desired to disassemble and inspect, and replace the packing. Also, check rust conditions on the cylinder inner walls.
	2. If the cylinder does not operate, add corrosion inhibitor only.	2. If cylinders, which have been stored for a long time, are used as they are, there is possibility of oil leakage because of temporary poor sealing conformity.
3. Care is needed to avoid falling, collision, dislodgment and dents while storing.		
4. Inside of the cylinder assembly, there is residual oil (Hydraulic fluid included anti rust chemicals). Don't remove the port plug and draw out the residual oil for no reason.		

https://truckmanualshub.com/

(2) At the time of installing devices

1. Operate cylinder at least once every 6 months.
2. Keep the piston rod in its retracted position, avoid exposure to outside air and apply corrosion inhibitor or grease to the exposed parts at least once a month.
3. Careful handling is necessary to avoid damage to piston rods.
4. If cylinders are placed under conditions where they are exposed to salty wind (e.g. during exports), always apply corrosion inhibitor to piston rods and protect them as much as possible with polyethylene or V.C.I paper.
5. Solutions such as corrosion inhibitors may have adverse effects on sealing materials. Therefore, careful selection and handling is required to avoid getting oil on dust seals. (Recommended corrosion inhibitors are listed below.)

(3) Recommended corrosion inhibitors

Cylinder Internal use	Volatile corrosion inhibitors (V. C. I) (a) Fellow Guard #1009 (U.S.C. KK) (b) Knuckle Oil #105S (PARKER KOSAN) Amount to be added for (a) and (b) is within 3 to 5% per volume of hydraulic oil:Fellow Guard: 5/100.0 Knuckle Oil: 3/100.0
For piston rod use	P-1320 (NIHON SEKIYU), Solvent cutback type
Machined surfaces except for oil tight parts	NP-1 to NP-3 (solvent cutback type corrosion inhibitor JIS Z-1801-1960) NP-4 to NP-6 (rust preventive petrolatum JIS Z-1802-1962) Choose either one of the above.

(4) Recommended hydraulic fluid

- Recommended Hydraulic Fluid
  Mineral hydraulic fluid (ISO VG32 and VG46 or equivalent)
- Oil Temperature
  -30~100×C
- Contamination of Hydraulic Oil
  Clearness to be NAS11. However allowable diameter of comtaminaion is MAX 0.1mm.

https://truckmanualshub.com/

6. Instructions for Disassembling and Assembling

(1) Preparation

Before starting the disassembly, prepare the following items:

[1] Prepare a workbench
Choose and prepare a stable and strongly built workbench large enough to arrange and keep parts and perform jobs.

[2] Prepare tools and materials
Prepare the required tools and materials shown in 6-(5). Required tools.

(2) General precautions for work

[1] Before disassembly, fully rinse soil and dust attached to the cylinder outside walls.

[2] As each part is a precision component, handle parts carefully and do not drop them or allow them to hit each other.

[3] Do not attempt to hit or pry parts forcedly because they are tightly fitted. Take time and carry out the operation carefully in order to avoid causing burrs or damage resulting in inability to reassemble a part, oil leakage or lower efficiency.

[4] If components are left disassembled or half-disassembled, the parts may rust because of moisture and dirt. Rust prevention and dirt-proofing should be considered if the operation is suspended for unavoidable reasons.

(3) Maintenance reference

For sliding parts and sealing parts, replace them following the items below:

1. Bushing	When a whole quarter of the circumference has worn and turned reddish copper color
2. Seals and slide rings	Replace with new ones when disassembling cylinders
3. Pin bushing	When serious scuffing has occurred

(4) Instructions after assembly

Operational checks without load	Ensure no abnormality on each section and smooth motion when operating at full stroke more than 5 times.
Dimensional check	Confirm the most extracted length and the stroke shown in the drawing.
Pressure tightness check	Ensure that there is no looseness, permanent deformation and external leakage when applying the test pressure instructed in the drawing at each stroke end for 3 minutes or more.
External leakage check	Check oil leakage volume at the rod section.

https://truckmanualshub.com/

(1) Required tools

[1] Wrench Assembly (U1)

Item Number : KRV10620

Usage : Use it for detaching type of screwing piston.

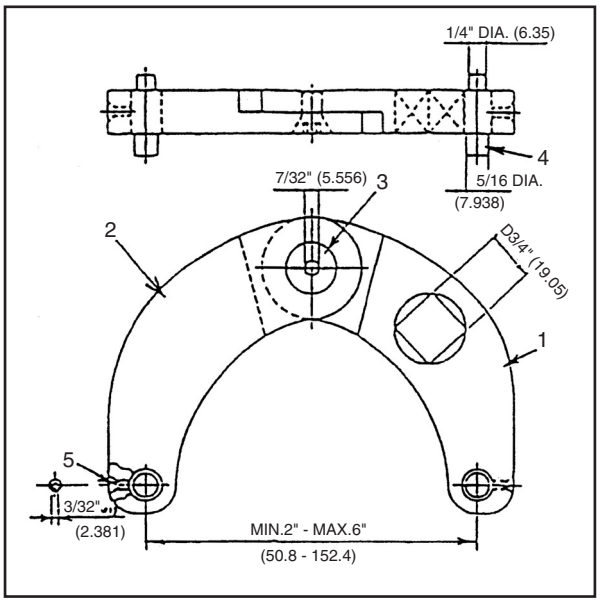

ELEMENT

No	Item Name	Qty	Remarks
1	Arm	1	square drive 3/4"
2	Arm	1	
3	Center pin	1	
4	Pin	2	diameter 1/4", diameter 5/16"
5	Set Screw	2	

Range can be adjusted
2" (50.8 mm) ~ 6" (152.4 mm)

Use example

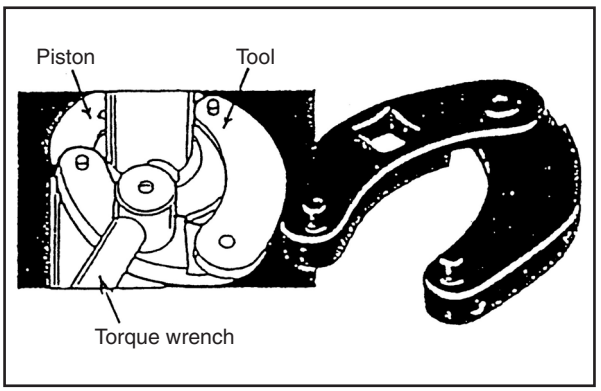

https://truckmanualshub.com/

[2] Piston Ring Expander

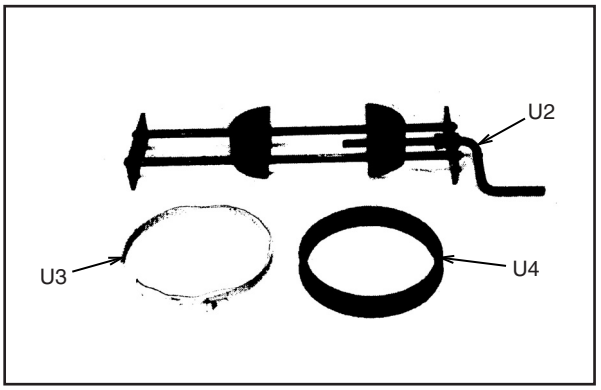

ELEMENT

Tool	Item Name	Item Number	Qty	Remarks
U2	Expander	KRV10570	1	
U3	Clamp	KRV10600	1	Outside diameter of piston for ϕ 120 ~ ϕ 135
		KRV10610	1	Outside diameter of piston for ϕ 100 ~ ϕ 115
U4	Ring (Rubber band)	KRV10580	1	Outside diameter of piston for ϕ 120 ~ ϕ 135
		KRV10590	1	Outside diameter of piston for ϕ 100 ~ ϕ 115

The teflon ring used for the oil pressure cylinder is not possible to install it by as is shape.
Turns a handle of piston ring expander, the teflon ring can be swollen easily without damage.
Also the ring can surely install the teflon ring in the piston.

[3] Bush Tool Kit

Item Number : KRV10630

Usage : Each bush tool is installed in the grip with the bolt, and it uses it as an application tool at the time of the rolling bush press-fitting of the work machine cylinder.

https://truckmanualshub.com/

(2) Instructions for disassembling

[1] Piston rod assembly

1) Remove the piping from the cylinder assembly.

2) Remove the mounting bolts and disconnect head assembly (1).

3) Pull out piston rod assembly (2).

※ Place an oil receiving pan underthe cylinder to receive the oil.

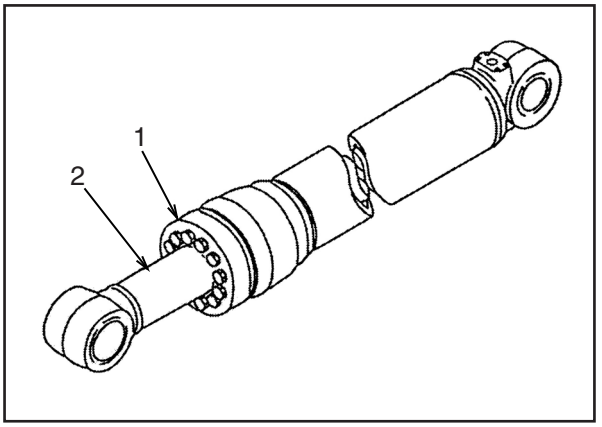

4) Disassemble the piston rod assembly according to the following procedure.

1. Set piston rod assembly (2) to stand.

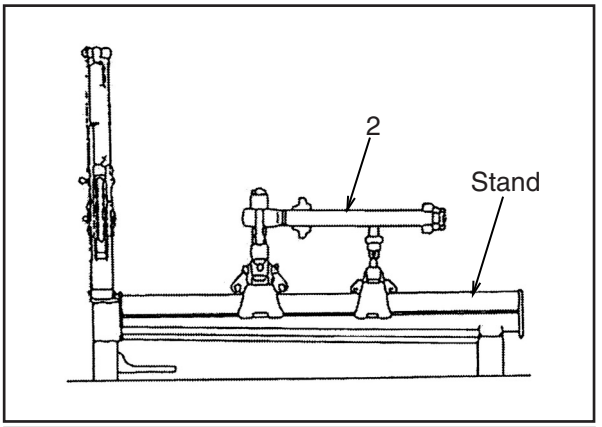

2. Remove piston assembly set screw (3).

※ SIf screw (3) is caulked too strongly and you cannot remove it, tighten it temporarily and cut the female threads with a tap, and then remove it.

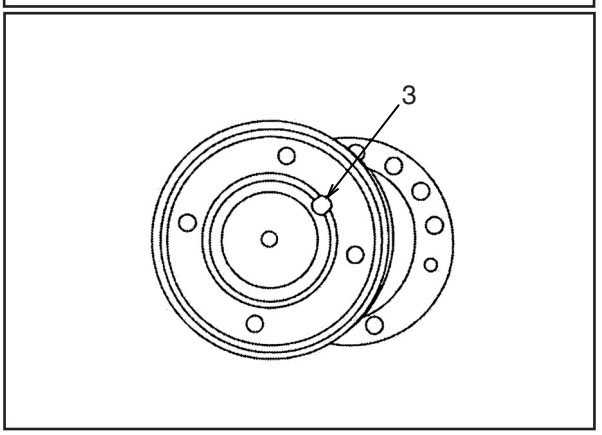

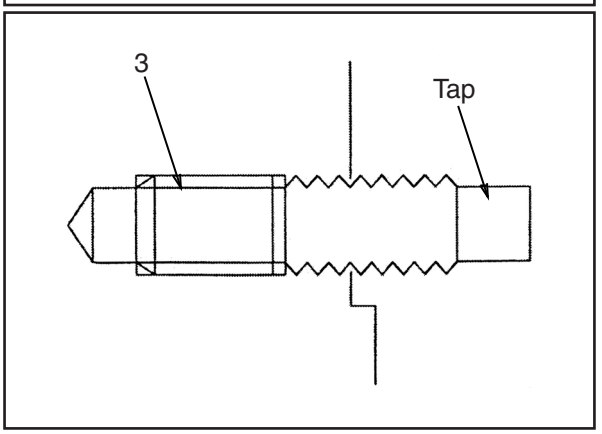

https://truckmanualshub.com/

3. Using tool U1, remove piston assembly (4).
   - If you do not use tool U1, loosen the piston assembly by using the holes (f10mm: 2 places).

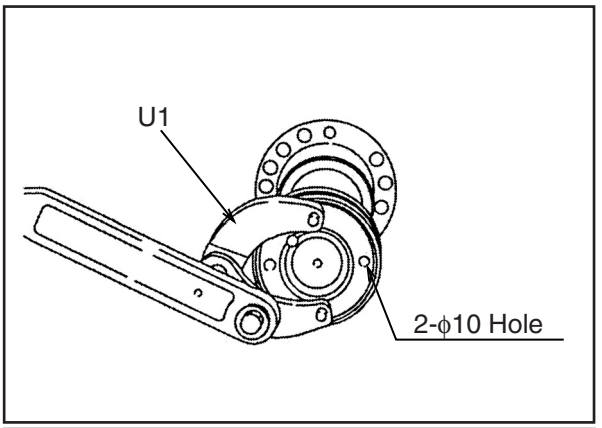

4. Remove plunger (5).
   - Boom cylinder
   - Arm cylinder
   - Bucket cylinder
5. Remove collar (6).
   - Boom cylinder
   - Arm cylinder
   - Bucket cylinder
6. Remove head assembly (7).

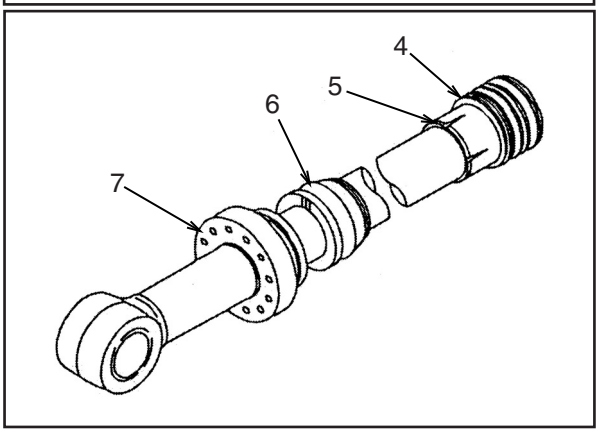

7. Remove cap (8) and take out 12 balls (9), and then remove cushion plunger (10).
   - Arm cylinder

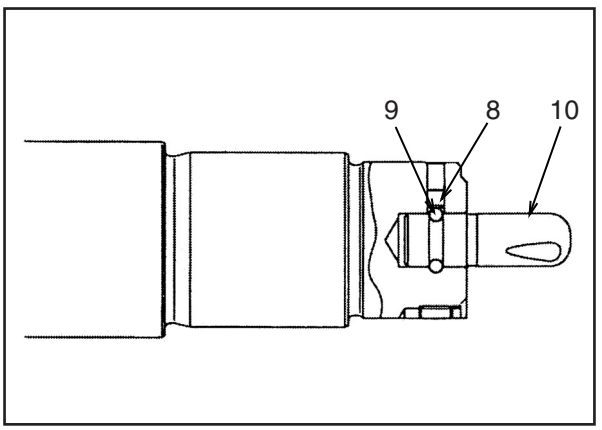

[2] Disassembly of piston assembly

1)Remove ring (11).
2)Remove wear ring (12).
3)Remove piston ring (13).
4)Remove O-ring and backup ring (14).

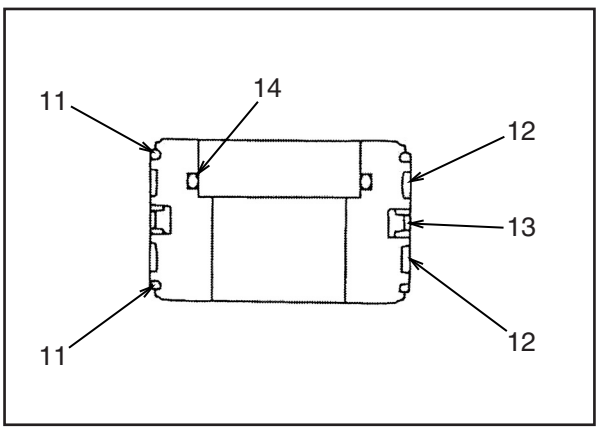

https://truckmanualshub.com/

[3] Disassembly of cylinder head assembly

1) Remove O-ring and backup ring (15).
2) Remove snap ring (16) and dust seal (17).
3) Remove rod packing (18).
4) Remove buffer ring (19).
5) Remove snap ring (21).
6) Remove bushing (20).

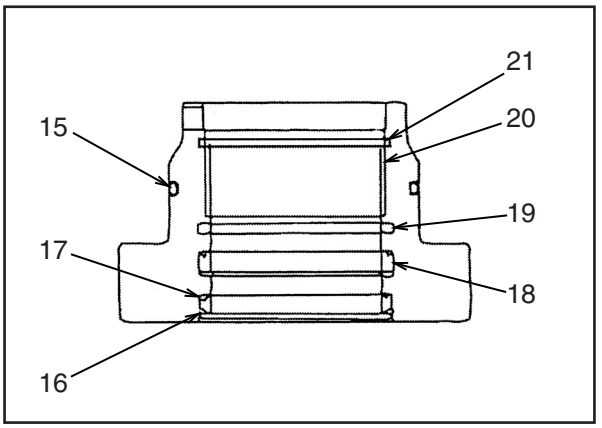

https://truckmanualshub.com/

(3) Instructions for Reassembly

※ Take care not to damage the packings, dust seals, O-rings, etc.

※ Do not insert each backup ring forcibly, but warm it in water at 50 - 60×C and then insert it.

[1] Assembly of piston rod assembly

1) Using tool, press fit bushing (20) and set snap ring (21).
2) Install buffer ring (19).
3) Install rod packing (18).
4) Using tool, install dust seal (17) and fix it with snap ring (16).
5) Install backup ring and O-ring (15).

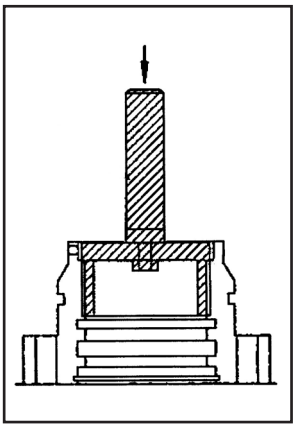

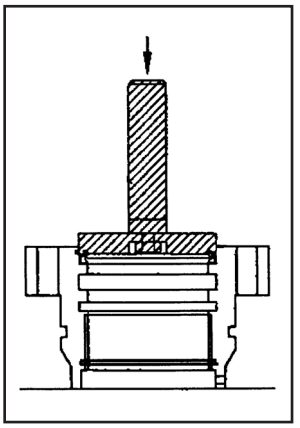

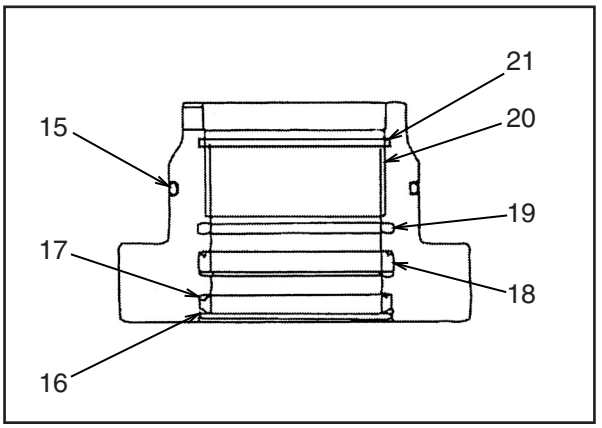

[2] Assembly of piston assembly

1)Using tool U2, expand piston ring (13).

※ Set the piston ring to tool U2 and give the handle 8 - 10 turns.

2)Set tool U3 and tighten piston ring (13).

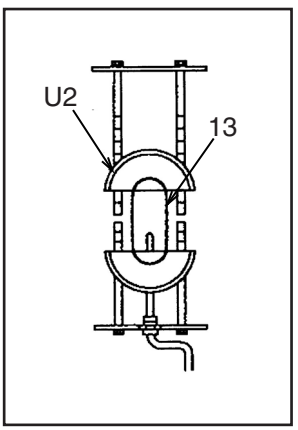

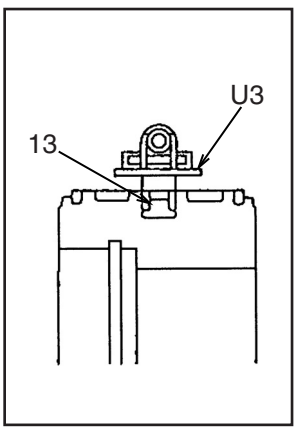

https://truckmanualshub.com/

3)Install backup ring and O-ring (14).
4)Install wear ring (12).
5)Install ring (11).

※ Take care not to increase the closed gap of the ring too much.
Ring groove:
Grease (G2-L1)

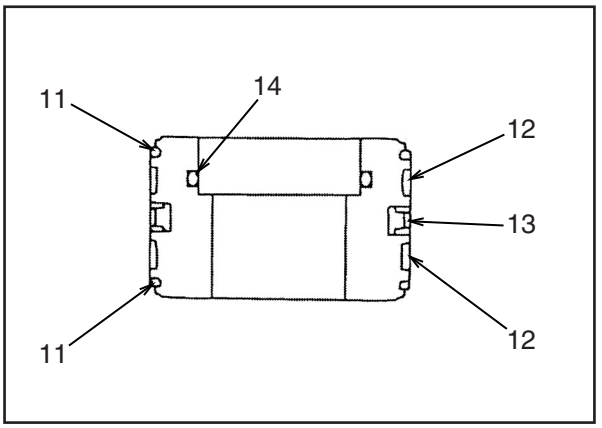

[3] Piston rod assembly

1) Set piston rod assembly (2) to stand.

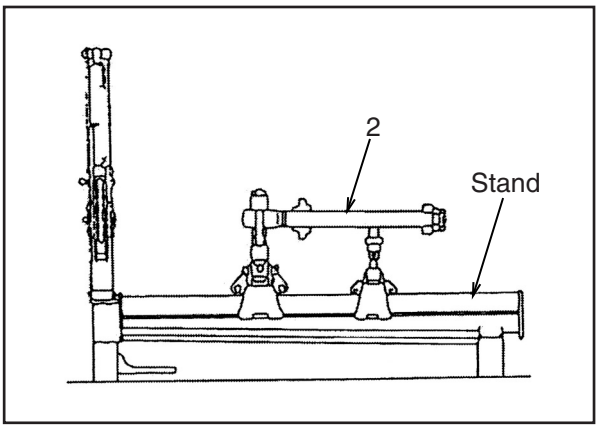

2) Install head assembly (7).
3) Fit the O-ring and backup ring to collar (6), and then install them.
   - Boom cylinder
   - Arm cylinder
   - Bucket cylinder
4) Install plunger (5).
   - Boom cylinder
   - Arm cylinder
   - Bucket cylinder

※ Check that the plunger end has a small play.

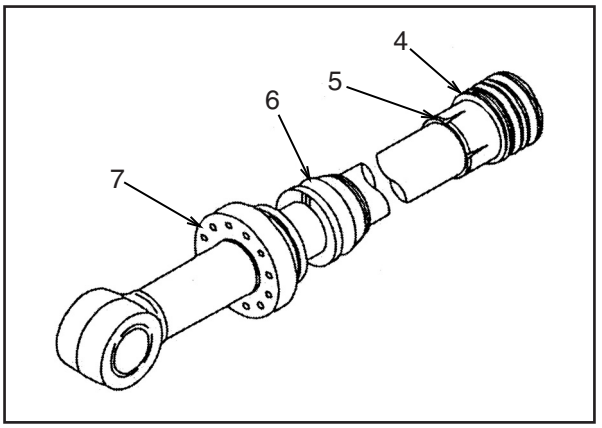

https://truckmanualshub.com/

5) Set cushion plunger (10) to the piston rod, and then set 12 balls (9) and secure them with cap (8).
   - Only arm cylinder

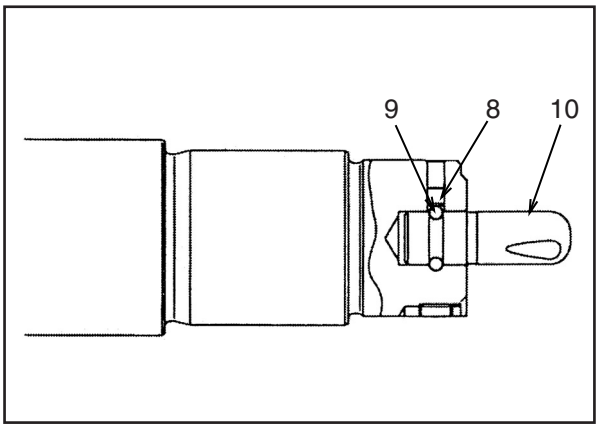

6) Assemble piston assembly (4) according to the following procedure.

※ When reusing the rod and piston assembly (2)
Clean the rod and piston assembly thoroughly to remove iron chips and dirt.

1. Using tightening tool U1, tighten piston assembly (2) until the screw holes are matched to each other.

※ Remove burrs and fins with a file.

2. Tighten screw (3).

Screw (3):
66.2±7.35N²m

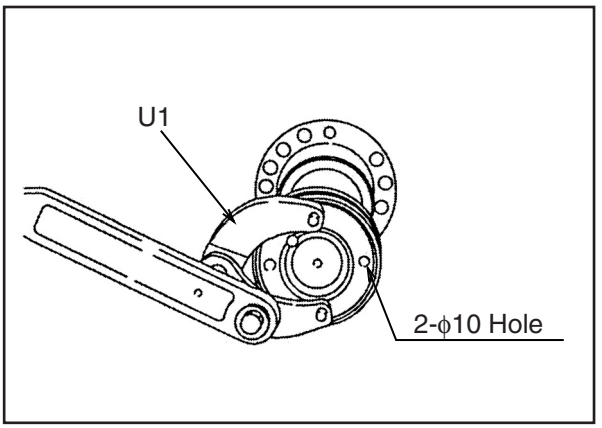

3. Caulk 4 places around the screw with a punch.
   When replacing either or both of the rod and piston assembly (2) with new one

※ When using the rod with the bottom cushion, make a mark of the position of the cushion plug on the rod end.
   - Only arm cylinder

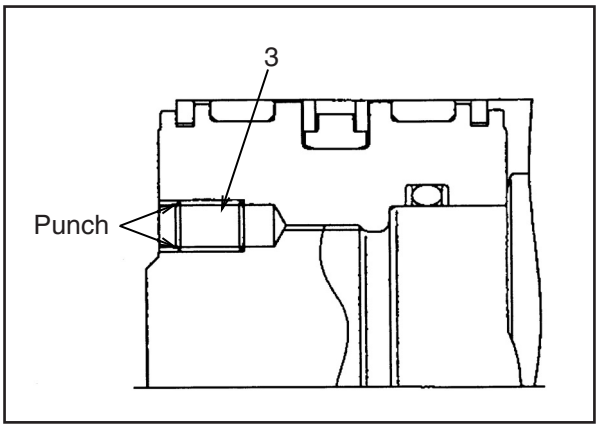

https://truckmanualshub.com/

1. Screw in piston assembly (4) until it touches the rod end, and then tighten it with tool U1.
   Piston assembly (4):
   294±29.4 N²m

※ After tightening the piston, check that plunger (5) has play.
   - Boom cylinder
   - Arm cylinder
   - Bucket cylinder

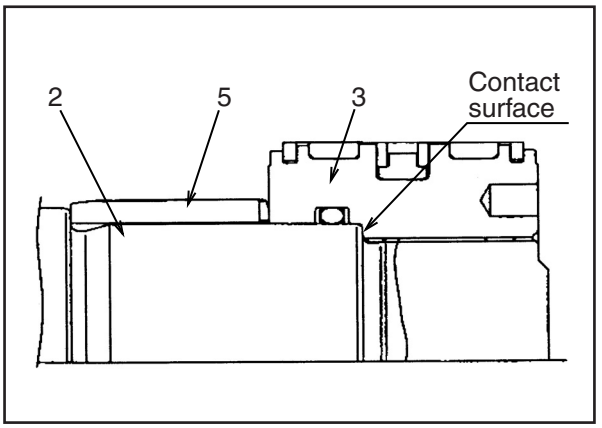

2. Cut a screw hole to install screw (3).
   Set the drill to the V-grooves of the threads of piston (4) and rod (2) and cut a screw hole horizontally.

※ When using the cylinder (arm cylinder) with the bottom cushion, avoid cutting a screw hole on the cushion plug.

   - Screw cuttinn dimensions (mm)

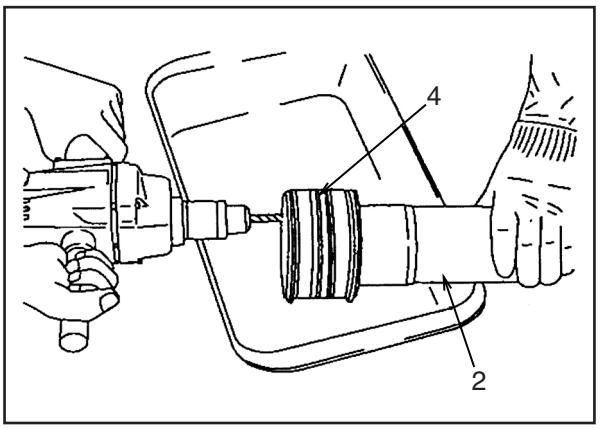

Cylinder name	Tap drill hole diameter	Tap drill hole depth	Tap size	Tapping depth
Boom Bucket	10.3	24	12x1.75	20
Arm	10.3	36	12x1.75	29

3. After cutting the screw hole, removechips and dirt from it, and then clean it thoroughly.
4. Tighten screw (3).
   Screw (3):
   66.2±7.35 N²m
5. Caulk 4 places around the screw with a punch.

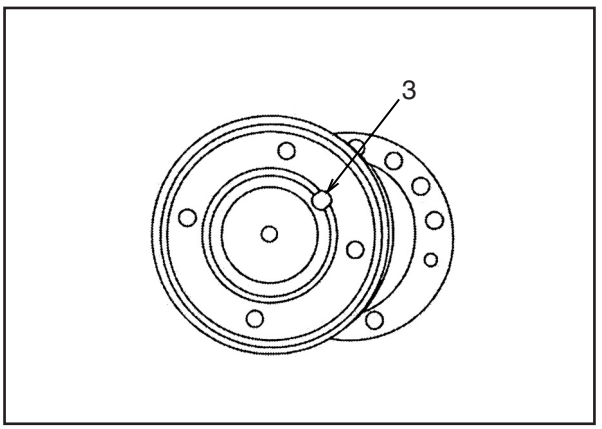

https://truckmanualshub.com/

7) Install piston rod assembly (2).
Ring groove:
Grease (G2-L1)
   * Set the closed gap of the ring horizontally (on the side) and insert the piston rod assembly, aligning it with the cylinder tube.
   * After inserting the piston rod assembly halfway, check that the ring is not damaged or removed, and then insert to the end.

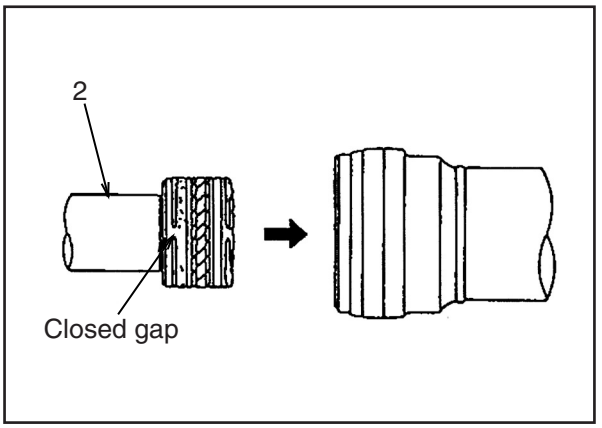

8) Tighten the mounting bolts of head assembly (1).
Mountingbolt:

Cylinder name	Tightening torque
Boom	529.7±78.5 N・m
Arm	892±137 N・m
Bucket	529.7±78.5 N・m

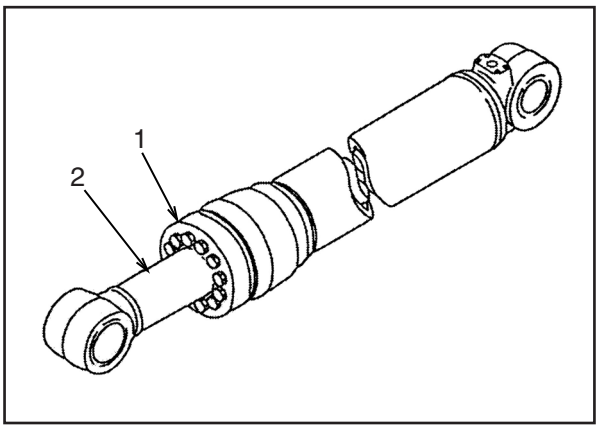

9) Install piping.

7. Trial run

[1] After fitting the cylinder on the machine, move slowly more than 8 times at the full stroke by operating the switch-over valve. The inside of the cylinder will be filled with oil.
Quick and sudden movement at the initial stage can cause aeration by the hydraulic oil.

[2] If air bleeder is attached (boom cylinder), apply pressure to bleed by making its air bleeding side the pressured side (return oil side).

[3] Lubricate pins on both ends.

https://truckmanualshub.com/

For Operation Use

1. Safety Information

(1) Notes for these instructions

To use this device safely, always read carefully and fully understand these instructions before operating or maintaining/inspecting the device. Particularly, read carefully and strictly observe the Safety Precautions.
Always keep these instructions at hand and store in a safe place.

(2) Safety precautions

Before using this device, read the Safety Precautions section carefully and try to use it properly.
These precautions described here are intended to show how to use this device in a proper manner and prevent injury to the operator or other people, or damage to the device.
These precautions are classified into two categories in order to indicate possible results according to the seriousness of hazard or damage and imminent levels if devices are handled in an improper manner: *WARNING* and *CAUTION*.
As all precautions are very important safety information, always follow them.

[1] Precautions when operating devices
When operating this device, observe the following items:

⚠	1. Before starting this device, ensure that nobody and no objects are near the machine or within the working range. 2. If the machine indicates any dangerous behavior, immediately stop the device which supplies the machine with hydraulic pressure. 3. When abnormality (noises or oil leakage) occurs, immediately stop operation and take necessary measures. It may cause breakage and injury.

⚠	1. When operating the device for the first time, ensure that the hydraulic circuits and electric cables are correctly set and there are no loose connections before starting the operation. 2. Do not use the devices in other than specified manners described in dimensional outline drawings. 3. While operating, be careful and keep your hands and body away from the devices as they often get hot due to the increased oil temperature. It may cause burns. 4. Use specified hydraulic oils, and control their contamination level using estimated values. It may cause malfunction and breakage. 5. Always install filters at the entry side of the device described in the dimensional outline drawing.

[2] Precautions when handling devices
When handling devices, observe the following items:

⚠	1. To avoid injury while handling devices, wear protective gear as necessary. 2. Carefully select suitable work methods according to the weight of a product and working postures to avoid a caught hand or low back damage. 3. Do not apply extra external force by putting yourself on, hitting or dropping the device. It may cause malfunction, breakage and oil leakage. 4. Completely wipe hydraulic oil from devices and the floor. It may cause devices to drop or injury by slipping.

https://truckmanualshub.com/

[3] Precautions when installing and removing devices

⚠	1. Prior to the operation, always turn off the power on the device and ensure that the motor and engine have stopped completely. In addition, check that the pressure in the hydraulic piping is zero. Release the remaining pressure in the accumulator by operating device lever more than 10 times. 2. Installation, removal, piping and wiring should be carried out by qualified technicians only. (Qualified technician: one who has acquired a Hydraulics Adjustment 2nd Grade Certificate or equivalent, or has had service training held by our company's business department.) 3. Clean the fitting holes and surfaces. It may cause breakage and oil leakage due to poorly tightened bolts and defective sealing. 4. When installing, always use specified bolts and apply specified torque to tighten the product. Do not install products in other than a specified manner. If this is neglected, it may cause malfunction, breakage and oil leakage.

[4] Precautions when maintaining and storing

⚠	1. Never attempt to modify products by yourself. 2. Do not disassemble and assemble products without notifying us. The product will not function fully to its specified performance and may cause errors or accidents. When disassembling and assembling is urgently needed, it should be done by qualified technicians only. As described in 5, however, performance and functions are only guaranteed on products that have passed our performance and operation tests conducted by us. 3. When transporting and storing products, take necessary measures for dust proofing and rust prevention according to conditions such as atmosphere temperature and humidity. 4. When using products that were stored for a long time, seals may need to be replaced.

[5] Precautions regarding performance/function

⚠	As this product is one of the essential safety devices, performances and functions are only guaranteed on products that have passed our performance and operation tests conducted by us. Do not disassemble and assemble this product unless you fully understand the precaution described above.

https://truckmanualshub.com/

(3) Exemption from liability

The following items are to be exempted:

[1] Irresistible force (natural disasters) and external factors (accidents)
[2] Wrong use and misuse
- Use other than that specified
- Use under different conditions from those specified
- Execution of prohibited items
- Execution of items other than specified in manuals (operation, maintenance and inspection order)
- Failure of items specified in instruction manuals (operation, maintenance and inspection order)

[3] Unsafe conduct
[4] Performances and functions of the device which has been disassembled and assembled by your company or a third party.

2. Description

The pilot valve is a pressure reducing valve type remote control valve, integrating 4 pressure reducing valves to control secondary pressure in one valve casing. Adjusting the inclination of the operating section controls output pressures.

3. Specifications

Primary pressure	Maximum pressure 6.9 MPa
Secondary pressure	0 to 4.4 (Maximum control pressure) MPa
Allowable back pressure	Maximum 0.3 MPa
Rated flow	20 L/min
Operating inclination	± 19° , ± 25° (single)
Mass	1.9 kg
Piping	To obtain better response, suitable piping is inner diameter 8, length 3 M. In addition, the return oil should be directly returned to the tank to avoid the influence of back pressure.

https://truckmanualshub.com/

4. Structure

The structure of a pilot valve is as shown in the assembly sectional drawing (Page 21/22). The casing has openings along the vertical axis, in which pressure reducing valves are integrated.
The pressure reducing valve section consists of spools (201), springs (241) for setting secondary pressure, return springs (221), spring seats 1 (216) and washers 2 (217). The spring (241) for setting secondary pressure is configured to obtain reduced secondary pressures of 0.49 to 0.98MPa (depending on models). The spool (201) is pushed against the push rod (212) by the return spring (221). As the push rod (212) is pressed down when the operating part of the handle is inclined, the spring seat 1 (216) is also lowered at the same time, as a result, the settings of the spring for setting secondary pressure (241) change.
The casing (101) and port plate (111) have oil entry ports P (Primary pressure) and exit ports T (Tank), and the secondary pressure is delivered from the ports 1, 2, 3 and 4.

5. Functions

(1) Basic functions

The pilot valve is a valve designed for controlling the strokes and directions of the control valve spool. This is achieved by acting output pressures from the pilot valve on the end of the control valve spool.
To meet requirements for this function, the pilot valve is composed of the following segments:

[1] Entry port (P) through which the hydraulic pump supplies oil
[2] Multiple output ports (1, 2, 3 and 4) which are designed to apply pressure supplied from the entry port on the end of spool in the control valve.
[3] Tank port (T) which is required to control the output pressures described above.
[4] Spool which connects an output port to the entry port or tank port.
[5] Mechanical measures including springs which act on the spool described above in order to control output pressure.

(2) Major component functions

The function of the spool (201) is to receive pressure oil supplied from the hydraulic pump at the port P, and by switching the oil paths, to introduce the pressure oil at port P to output ports (1, 2, 3 and 4) or introduce to port P. It is the role of the spring for setting secondary pressure (241) to determine output pressure by acting on this spool (201).
The push rod (212) is inserted in the plug (211) so that it can slide and change the deflection of the spring for setting secondary pressures (241).
The return spring (221), regardless of the output pressure, acts on the casing (101) and spring seat (216) to return the push rod (212) in the direction of zero displacement, ensuring that the spool (201) can return to its neutral position. This return spring also functions as reaction spring, to give good operational responsiveness.

https://truckmanualshub.com/

6. Operation

This section describes the operation of pilot valves based on the Hydraulic Oil Circuit Drawing (Figure 1) and Operation Description Diagrams (Figures 2 through 4). Figure 1 shows a typical usage of the pilot valve.

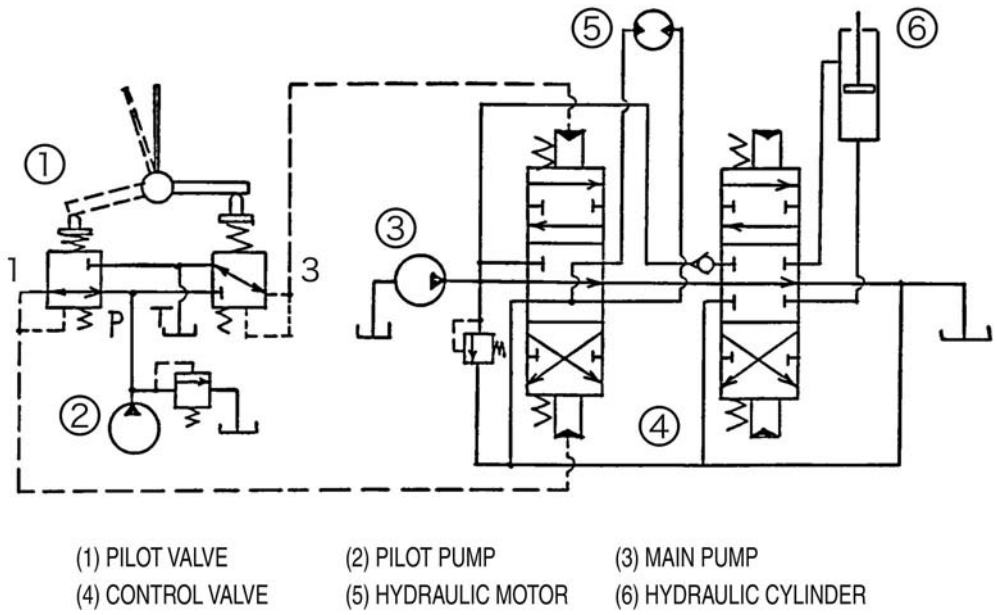

Figure 1. An example of pilot valve use

(1) When the handle is in neutral (see Figure 2)

The force of the spring for setting secondary pressures (241), which determines the output pressure on the pilot valve, is not applied on the spool (201). Therefore, the spool (201) is pushed upward by the return spring (221) (by the spring seat 1 (216)), the output ports (2, 4) are connected with the port T. At this moment, the output pressure is equal to the tank pressure.

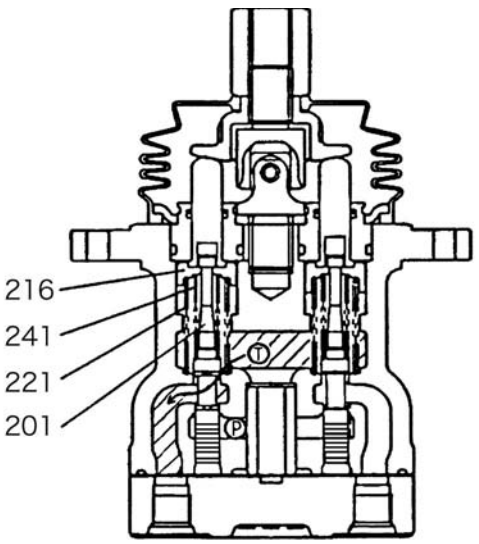

Figure 2. When the handle is in neutral

https://truckmanualshub.com/

(2) When the handle is inclined (see Fig. 3)

As the push rod (212) is pushed in by inclining the handle, the spool (201) (spring seat 1 (216)) moves downward and the port P and ports (2, 4) are connected. As a result, the oil supplied from the pilot pump flows into ports (2, 4), thus generating pressure.

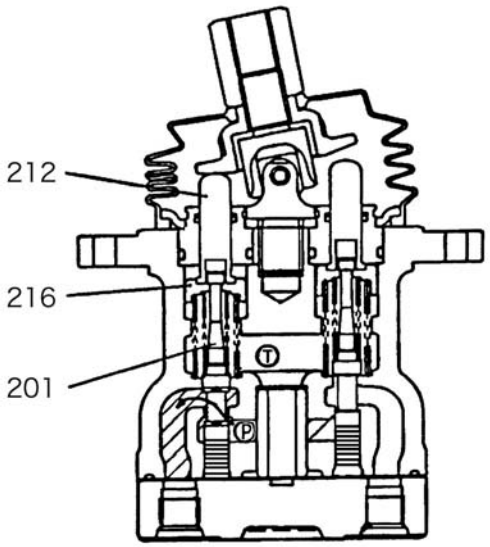

Figure 3. When the handle is inclined

(3) When the handle is held (see Fig. 4)

When the pressures at ports (2, 4) rise up to a pressure equivalent to the force of the spring (241), which was set by inclining the handle, the hydraulic force and the force of the spring are in balance. When the pressures at ports (2, 4) are more than the set pressure, ports (2, 4) and port P close and ports (2, 4) and port T open. When the pressures at ports (2, 4) are less than the set pressure, ports (2, 4) and port P open and ports (2, 4) and port T close. As a result, secondary pressures are maintained constantly.

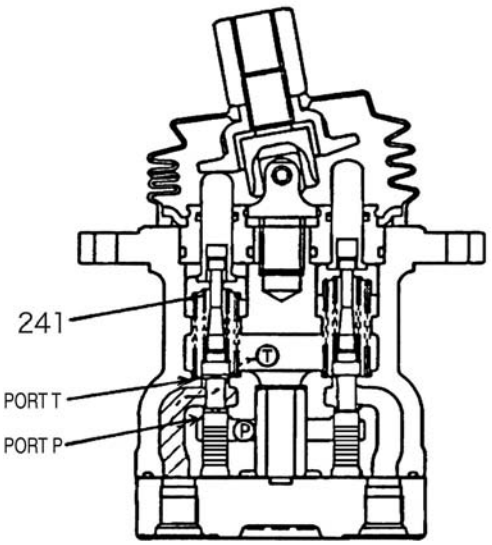

Figure 4. When the handle is held
(THE SECONDARY PRESSURE IS MORE THAN THE SET PRESSURE)

(4) Operation in ranges where the handle is greatly inclined (depends on models)

In some models, when the handle is inclined more than a given degree, the upper end of the spool touches the bottom part of the push rod bore and the output pressure remains equal to the port P pressure as connected.
What's more, if a structure where the spring seat and spring are integrated in the inside of push rod is used, when the handle is inclined more than a given degree, the bottom part of the push rod bore contacts the spring, and the force of the spring causes the secondary pressure gradient to change. Afterwards, the bottom part of the push rod bore contacts the upper end of the spring seat; thus the output pressure remains equal to the port P pressure as connected.

https://truckmanualshub.com/

7. Maintenance Procedures

(1) Required tools and tightening torque

Tool	Dimension (mm)	Part Number	Part Name	Screw Size	Tightening Torque (N・m)
Hexagon bar wrench	6	125	Hexagon socket head bolt	M8	20.6 ± 1.5
Wrench	22	312	Adjusting nut	M14	68.6 ± 4.9
	32	302	Circular plate	M14	
Special jig (See drawing, P22/22)	24	301	Joint	M14	47.1 ± 2.9

Other:

- Volatile corrosion inhibitor
- White kerosene
- High-temperature grease
- Sandpaper (#1000, #2000)
- Oil stone
- Vise

(2) Maintenance standards

Servicing/Inspection Items	Standards	Notes
Leak amount	Handle in neutral: 1000 cc/min. or more In operation: 2000 cc/min. or more Replace pilot valve assembly in either case above.	Conditions: Primary pressure: 2.94 MPa Oil viscosity: 23 cst
Spool	Replace the pilot valve assembly if its sliding part is worn more than 10 mm more than the non-sliding part.	The situation shown in the left is regarded in terms of leak amount as almost the same conditions described above.
Push rod	Replace if the tip is worn 1 mm or more.	
Looseness in the operating section	Replace if looseness of 2 mm or more caused by wears is found in the circular plate (302) and joint (301) in the operating section.	Adjust and rectify any looseness caused by poor tightening in the connection.
Stability of operation	If abnormal noises, hunting, primary pressure decrease or any other problems occur while in operation and are not rectified by the measures described in 8. Trouble-shooting, change the complete pilot valve assembly.	

Note:1 It is recommended that sealing parts such as O-rings should be replaced every time they are disassembled. However, they can be reused after confirming no damage.

Note:2 Always replace seal washer (121) when a hexagon socket head bolt (125) is loosened.

https://truckmanualshub.com/

(3) Disassembling instructions

[1] Preparation

1) Prepare a non-rattle, stable and strongly built workbench large enough to arrange and keep parts and perform jobs.
2) Prepare the tools and materials shown in 7-1.

[2] General precautions for work

1) As each part is a precision component, handle parts carefully and do not drop or hit each other.
2) Do not attempt to hit or pry parts forcedly although you think they are tightly fitted. Take time and carry out the operation carefully in order to avoid causing burrs or damage that may prevent assembly or result in oil leakage or lower efficiency.
3) If components are left disassembled or half-disassembled, the parts may rust because of moisture and dirt. Rust prevention and dirt proofing should be considered if the operation is suspended for unavoidable reasons.

Disassembling Procedures

[1] Clean pilot valve with white kerosene.

[2] Secure pilot valve on vice using a copper plate (or lead plate).

[3] Remove bellows (501).

- Put blind plug in each port.
- Be careful not to break the bellows (501).

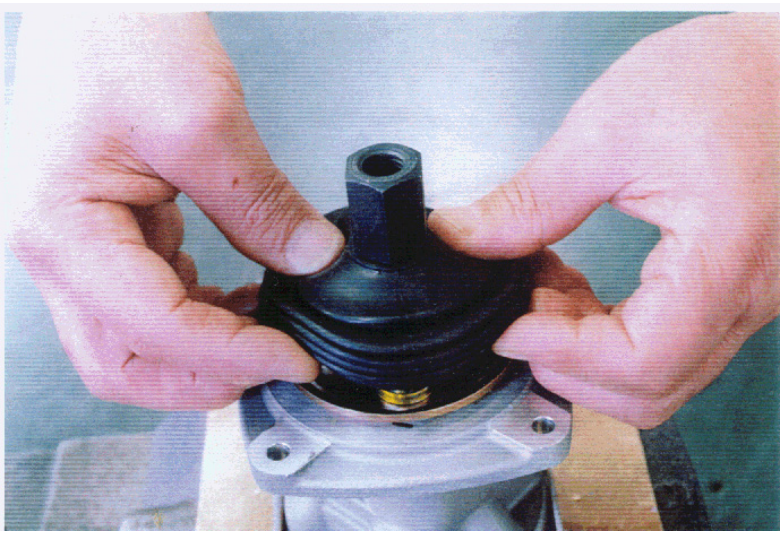

https://truckmanualshub.com/

[4] Remove the adjusting nut (312) and circular plate (302) by applying spanners with their width across flats on the adjusting nut and the circular plate.

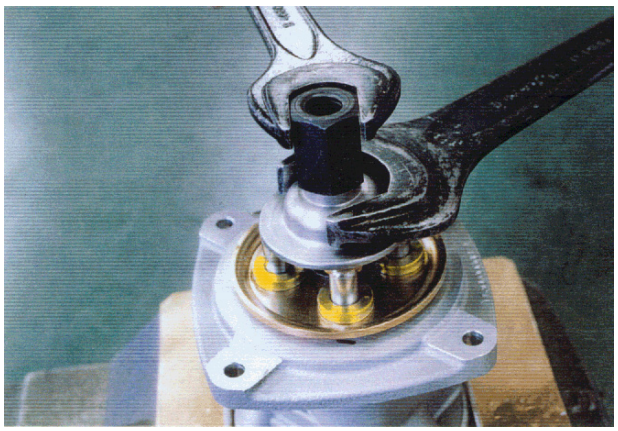

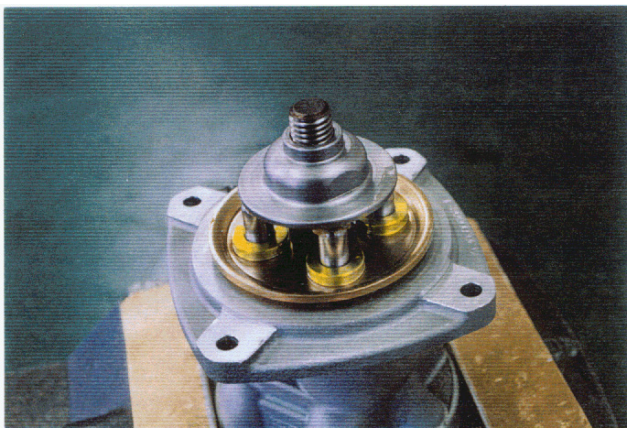

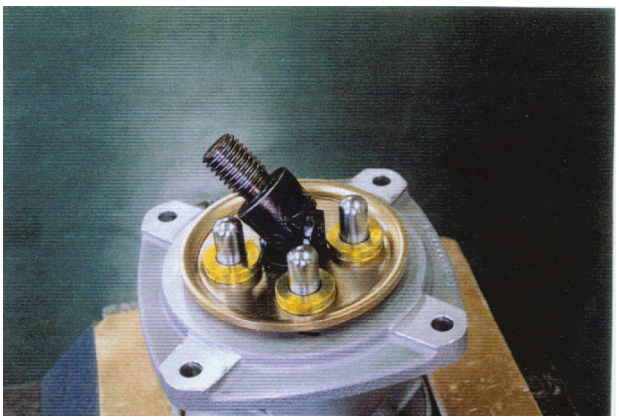

[5] Turn counter-clockwise and loosen the joint (301) using a jig.

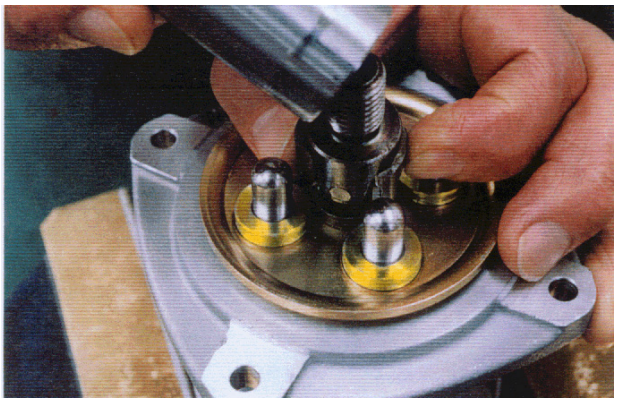

This photo shows how to fit the jig.

- If the return spring (221) is strong, the plate (151), plugs (211) and push rods (212) come forward at the same time when the joint (301) is loosened.
  When drawing out the joint, be careful that these parts do not pop out.

https://truckmanualshub.com/

[6] Remove plate (151).

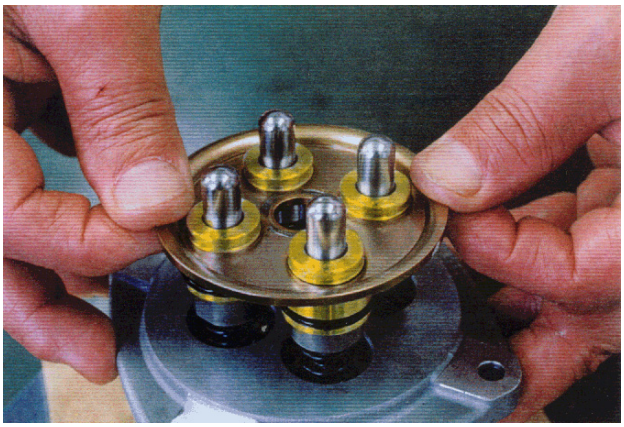

When the return springs (221) is strong.

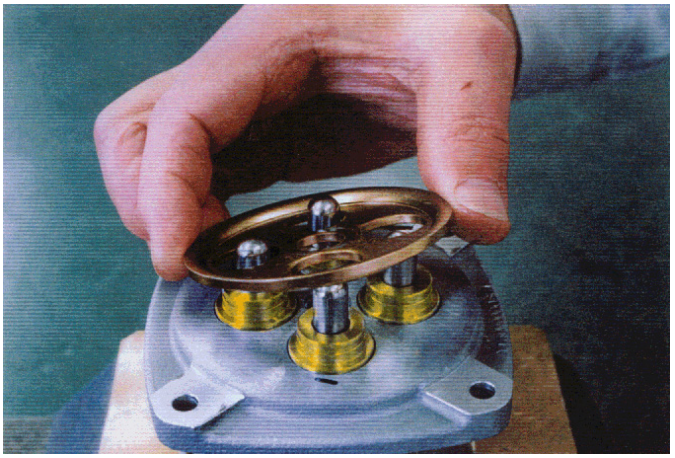

When the return springs (221) is weak.

[7] When the return springs (221) is weak, it is necessary to pull up using a minus driver because the plugs (211) remains inserted in the casing (101) by the action of the O-rings sliding resistance.

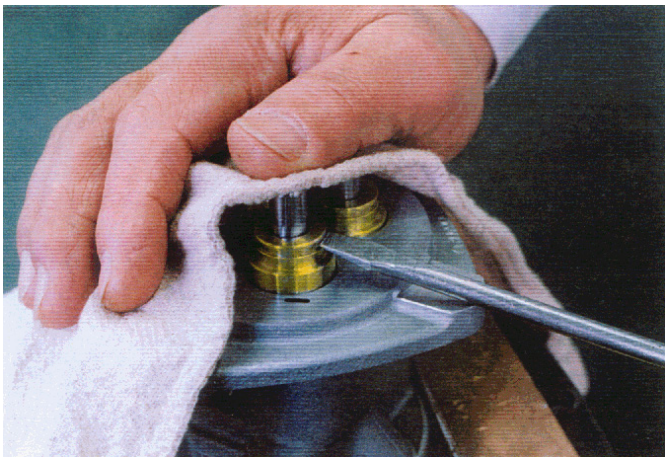

※ • Pull up the plug using the outer side of the plug, avoiding damage to the plugs (211) due to the unbalanced load.

⚠ Be careful when drawing it out, the plugs (211) sometimes may pop out by the action of the return springs (221).

https://truckmanualshub.com/

[8] Draw out the push rods (212), plugs (211), pressure reducing valve assembly and return springs (221) from the casing (101).

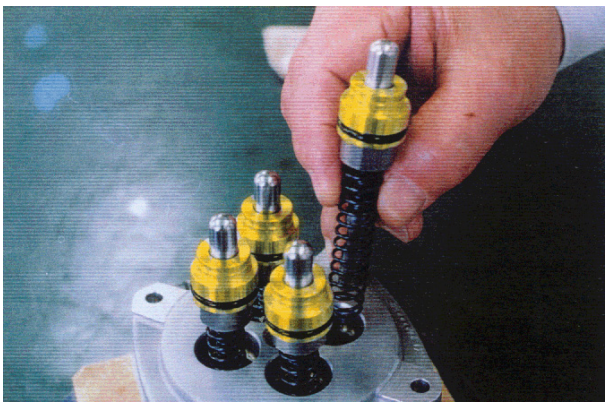

- Record the positional relationship between the components and casing holes.

[9] Secure the pilot valve on the vise by facing port plate (111) upward.

[10] Loosen and remove the hexagon socket head bolts (125) using a hexagon bar spanner.

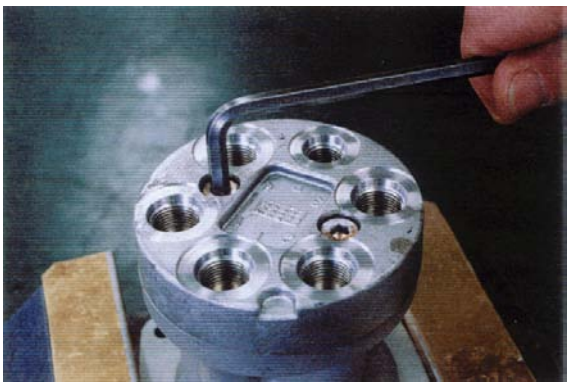

[11] Remove also the port plate (111) and O-ring (122) from the casing (101). Draw out the bushing (131) from the casing (101).

https://truckmanualshub.com/

[12] Disassemble the pressure reducing valve in the following order: Move the spring seat vertically while pushing in the spring seats (216) and bending the secondary pressure springs (241). Then, remove the spools (201) through the larger opening. Then, separate spools (201), spring seats (216), secondary pressure springs (241) and washers 2 (217).

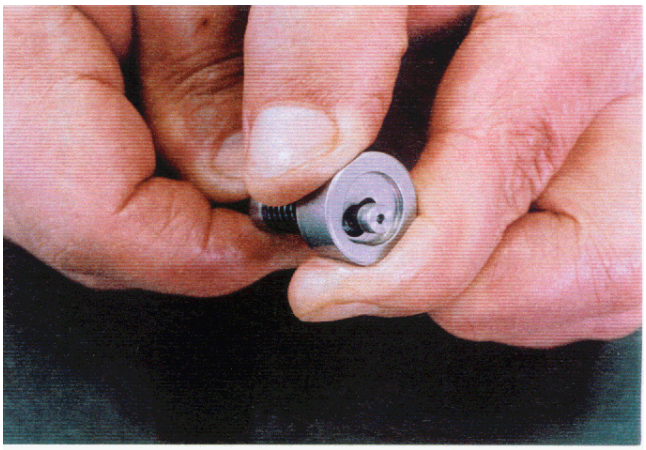

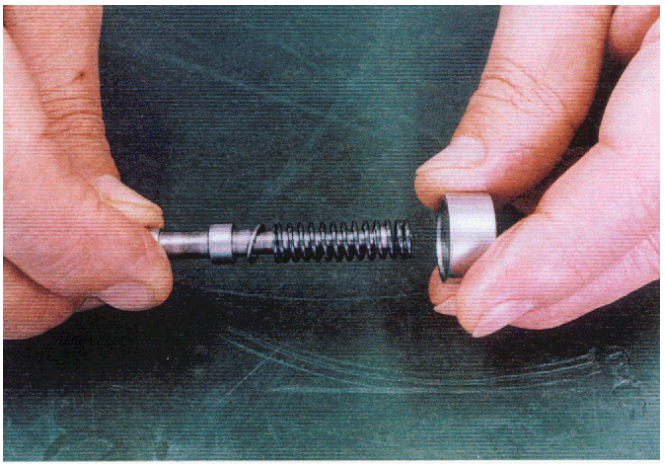

※ • Be careful not to damage the surfaces of the spools (201).

※ • Do not press the spring seats (216) downward more than 6 mm.

※ • Treat as an assembly even when disassembled.

[13] Draw out the push rods (212) from the plugs (211).

https://truckmanualshub.com/

[14] Remove the O-rings (214) and seals (213) from the plugs (211).

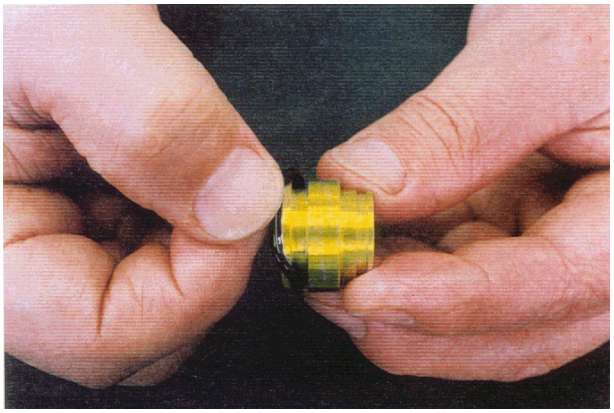

Remove the seals (213) using a small minus screwdriver.

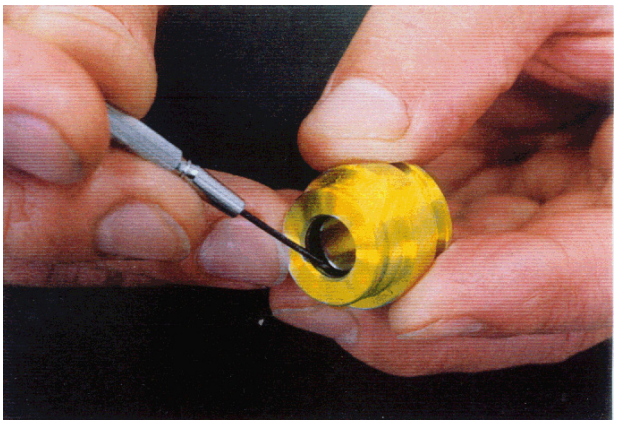

[15] Cleaning each part

1) Put and wash the parts in the preparatory cleaning container containing white kerosene (preparatory cleaning).
2) Put the parts in the finish cleaning container containing white kerosene to wash the inside fully by gradually rotating them (finish cleaning). Wipe off white kerosene attached to the parts using a clean cloth.

※ • Washing the dirty parts in the oil without preparatory cleaning tends to cause damage. Leave the parts submerged in the kerosene until the dirt and grease come off freely and float up.

※ • If the contaminated white kerosene is used, the parts may be damaged, which results in lower performance after assembling. Therefore, contamination control on the kerosene is essential.

※ • Do not attempt to dry parts using compressed air because dirt and moisture in the air may cause damage and rust on the parts.

[16] Rust prevention for each part

1) Apply corrosion inhibitor to each part.

※ • If parts are left as is after cleaning, they will rust and will not function fully after assembling.

https://truckmanualshub.com/

(4) Assembling instructions

[1] Preparation

1) Prepare a similar workbench, tools and materials shown in 7-3 Disassembling Instructions.

[2] General precautions for operations

1) Observe the same precautions described in the Disassembling Section.
2) Before assembling, remove metal chips and foreign substances from all parts, and ensure that there are no burrs or dents to the parts.
   If burrs and dents are found, remove them with an oil stone.
3) As a general rule, O-ring should be replaced with new ones.
4) Install O-ring carefully and do not damage them.
   (a small amount of grease should be applied to make them smooth.)
5) When installing parts, it is recommended that grease should be used to avoid dropping.
6) Tighten bolts up to tightening torque listed in 7-1 Required Tools and Tightening Torque. Measure torque using a torque wrench.
7) Upon completion of assembling, put blind plugs on all ports to prevent dirt from entering.

[3] Assembling Procedures

1) Assemble the bushing (131) and O-ring (122) in the casing (101).

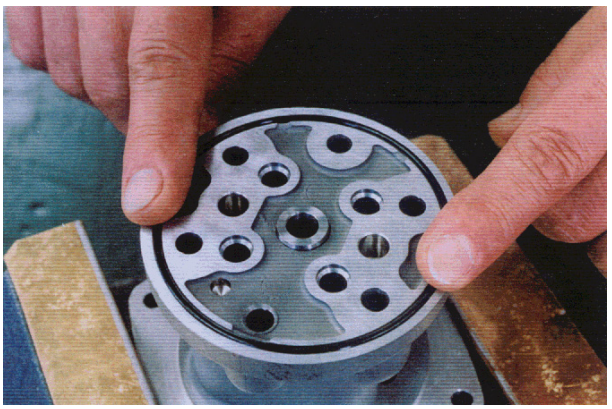

2) Fit the port plate (111) to the casing (101) using the hexagon socket head bolts (125) and seal washers (121).

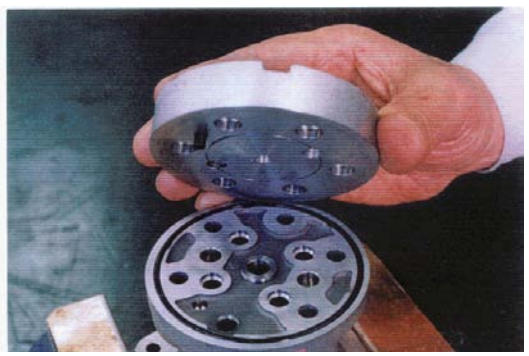

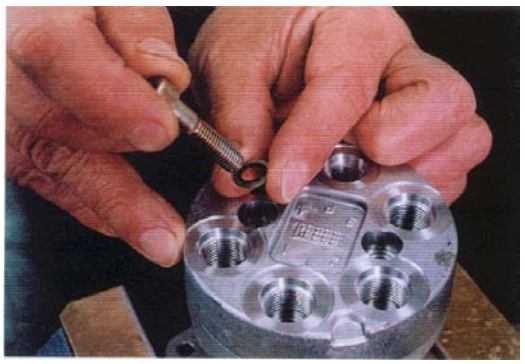

※ • Check the assembling positions so that the spring pin (126) are inserted into the casing holes.

※ • Replace the seal washers (121).

https://truckmanualshub.com/

3) Tighten the hexagon socket head bolts (125) by specified torque.

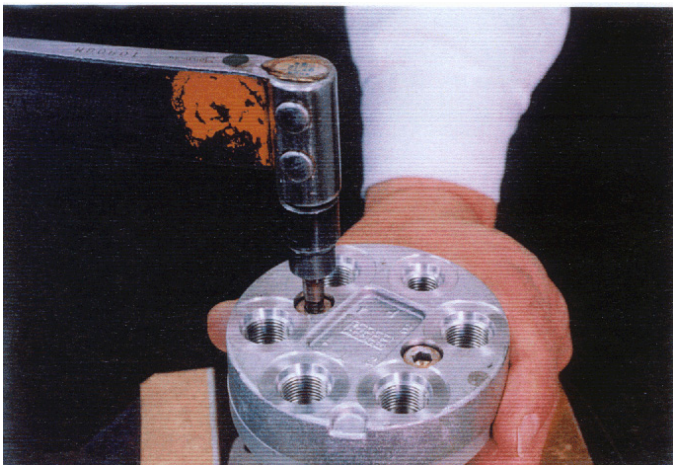

※ • Tighten two screws gradually and alternately.

4) Insert the washers 2 (217), secondary pressure springs (241) and spring seats (216) into the spools (201) in this order.
Then, move the spring seats (216) vertically while pushing in the spring seats (216) and bending the secondary pressure springs (241), and install them to the spools (201) through the larger hole.

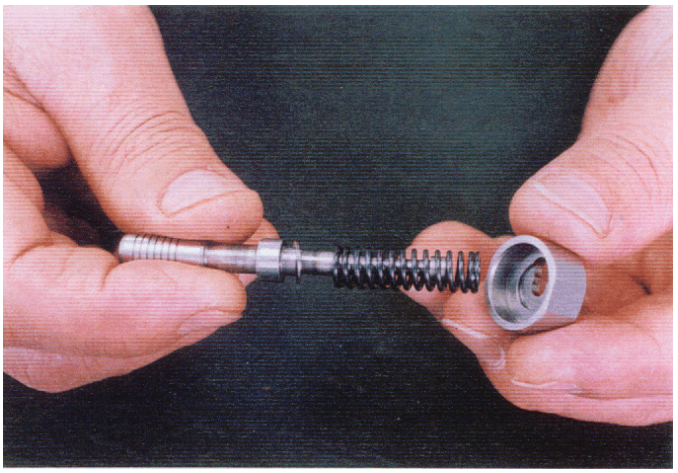

※ • Do not press the spring seat downward more than 6 mm.

https://truckmanualshub.com/

5) Install the return springs (221) to the casing (101). Fit the pressure reducing valve assembly into the casing (101).

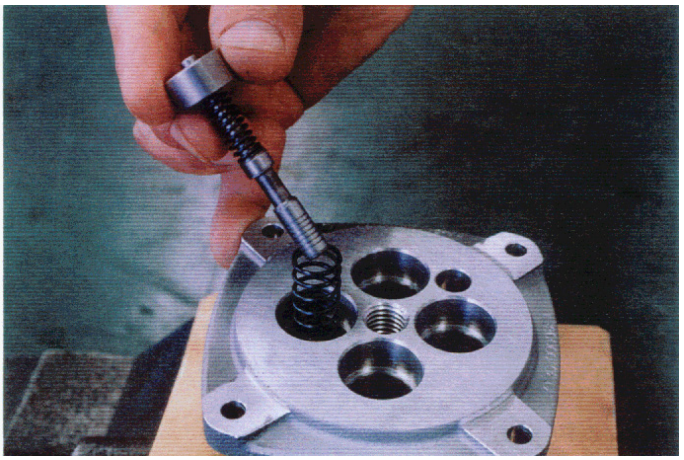

※ • Install the spring in the position before disassembling.

6) Install the O-rings (214) to the plugs (211).

7) Install the seals (213) to the plugs (211).

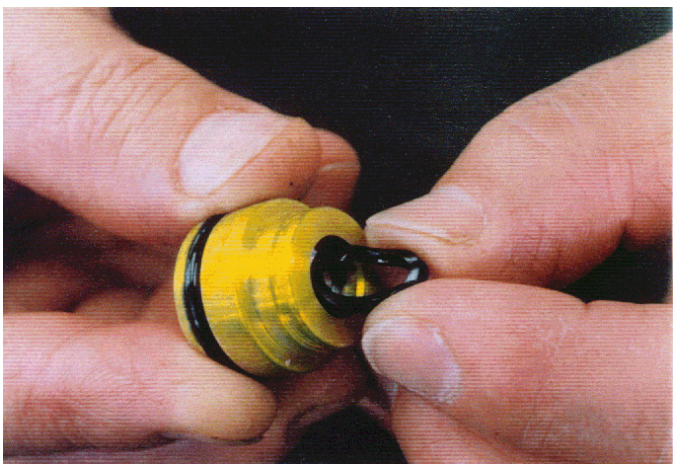

※ • Install the seals (213) with its lip as shown in the figure below.

https://truckmanualshub.com/

8) Install the push rods (212) into the plugs (211).

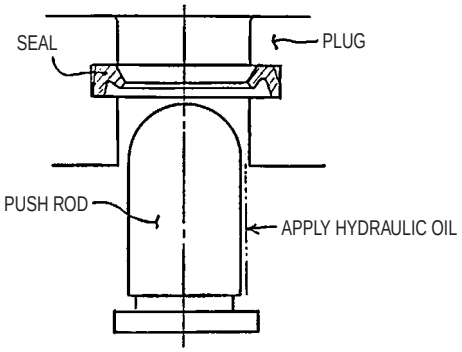

- Apply hydraulic oil to the surfaces of the push rod.

9) Install the plug assembly to the casing (101). When the return springs (221) is weak, the O-rings (214) stops by the action of sliding resistance.

※
- Do not pry the spools (201). This will damage the holes of the casing (101).
- If the return springs (221) are strong, install the four springs at the same time into the joint (301) using a plate (151).

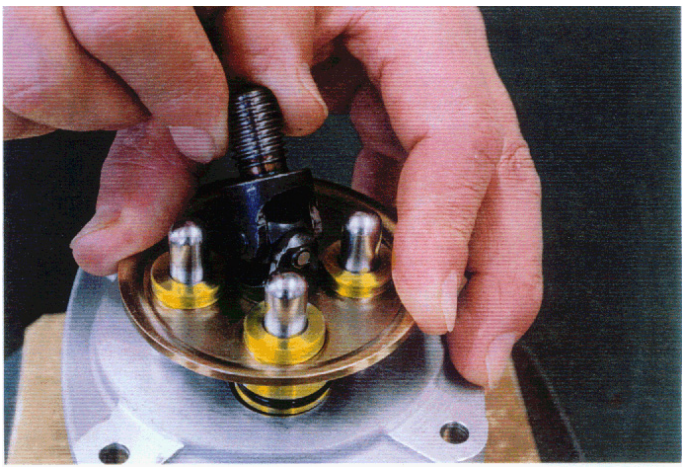

- Be careful that the plug assembly and plate (151) do not pop out.

10) Install plate (151).

https://truckmanualshub.com/

11) With jig, tighten the joint (301) to the casing (101) by applying specified torque.

Photo above show how to install the jig.

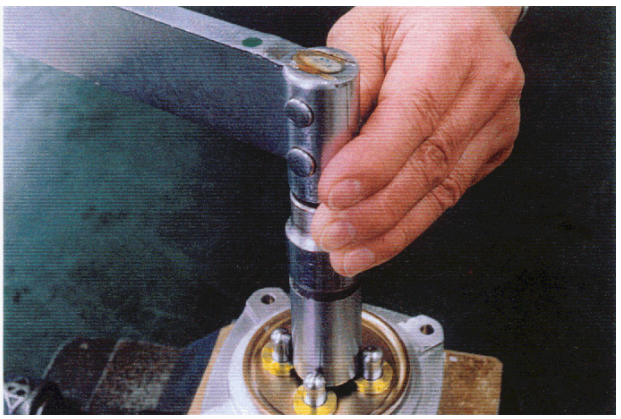

12) Install the circular plate (302) to the joint (301).

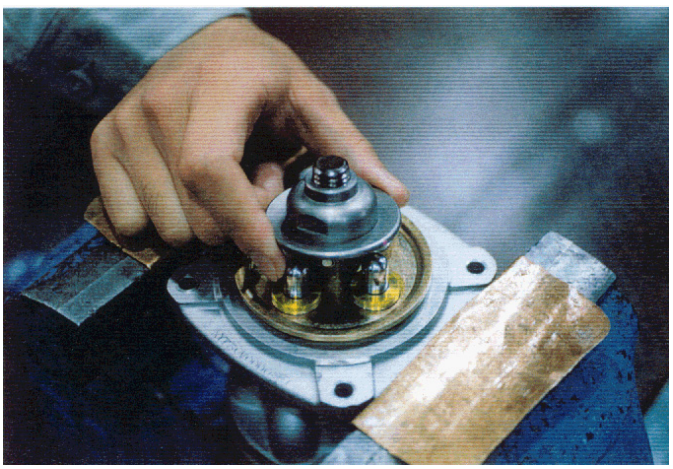

- Screw the circular plate up to the position where the circular plate contacts the four push rods (212) equally.
  Ensure that the circular plate (302) screwing position is correctly adjusted as its over screwing position leads to increases in secondary pressures when the lever is in neutral and causes operational errors.

https://truckmanualshub.com/

13) Install the adjusting nut (312), fix the circular plate (302) by applying spanner with its width across flats on the circular plate, and tighten the adjusting nut by specified torque.

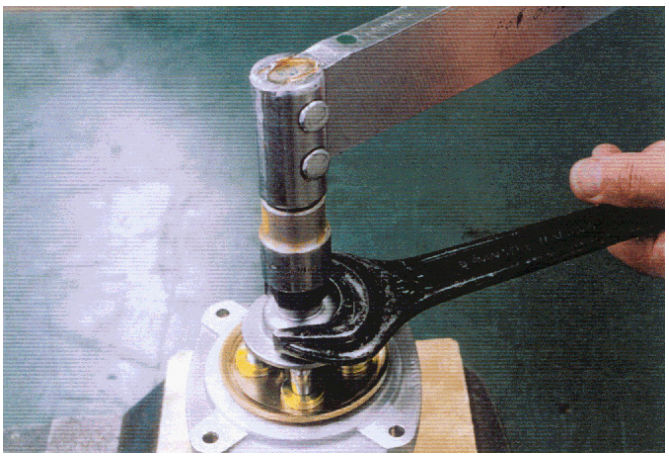

※ • Do not move the circular plate (302) while tightening.

14) Apply grease on the rotating part of the joint (301) and the top of the push rods (212).

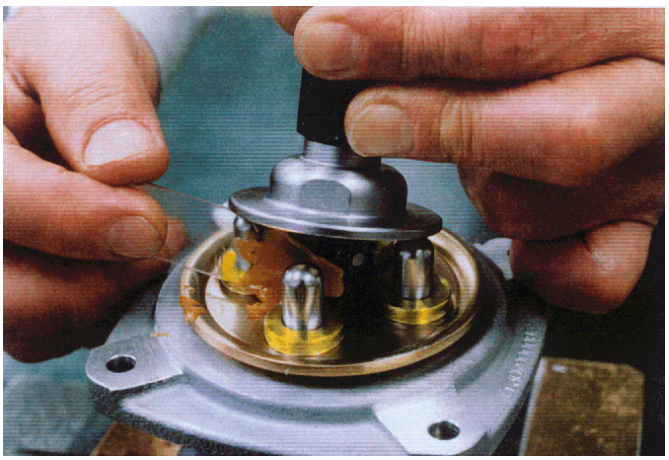

15) Install the bellows (501).

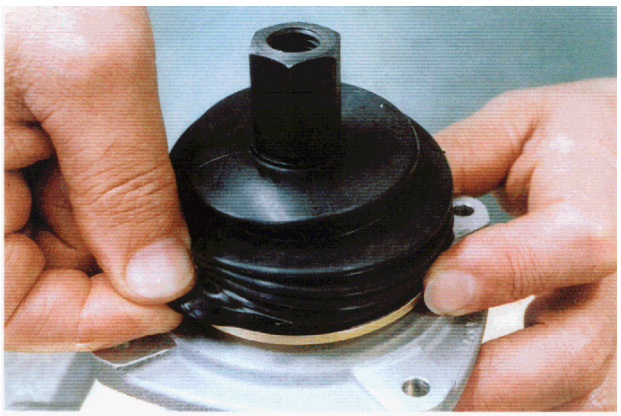

※ • Be careful not to break the bellows (501).

16) Fill volatile corrosion inhibitor through each port plug and put blind plugs.

https://truckmanualshub.com/

8. Troubleshooting

It is not easy to find the faulty part. The following table lists some possible problems. As repairs are not easy, refer to the possible causes and countermeasures in the table.
The table below shows general symptoms/possible causes and countermeasures. However, as a machine's trouble is generally caused not by a single faulty component but by other related components as well, it may be necessary to apply measures other than those listed in the Table.
The table shown below does not necessarily include all possible causes and remedies. Therefore, the technician in charge of repairs must further investigate problems and their causes as necessary.

Problem	Causes	Countermeasures
Secondary pressure doesnot rise.	1. Lower primary pressure	Ensure given primary pressure
	2. Breakage and fatigue of secondary pressure spring (241)	Replace with new one
	3. Abnormally large gap between spool (201) and casing (101)	Replace as a remote valve complete assembly
	4. Loose handle section	Disassemble/assemble and replace handle section
Unstable secondary pressure	1. Engaged sliding part	Repair engaged part
	2. Fluctuations in tank line pressure	Direct return to oil tank
	3. Entrapped air in piping	Bleed air by several operations
High secondary pressure	1. High tank line pressure	Direct return to oil tank
	2. Engaged sliding part	Repair engaged part

Cross-sectional View of Pilot Valve Assembly

TIGHTENING TORQUE LIST

++NO.	SCREW SIZE	TIGHTENING TORQUE
125	M8	20.6±1.5 N-m
301	M14	47.1±2.9 N-m
312	M14	68.6±4.9 N-m

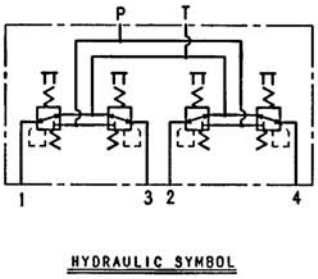

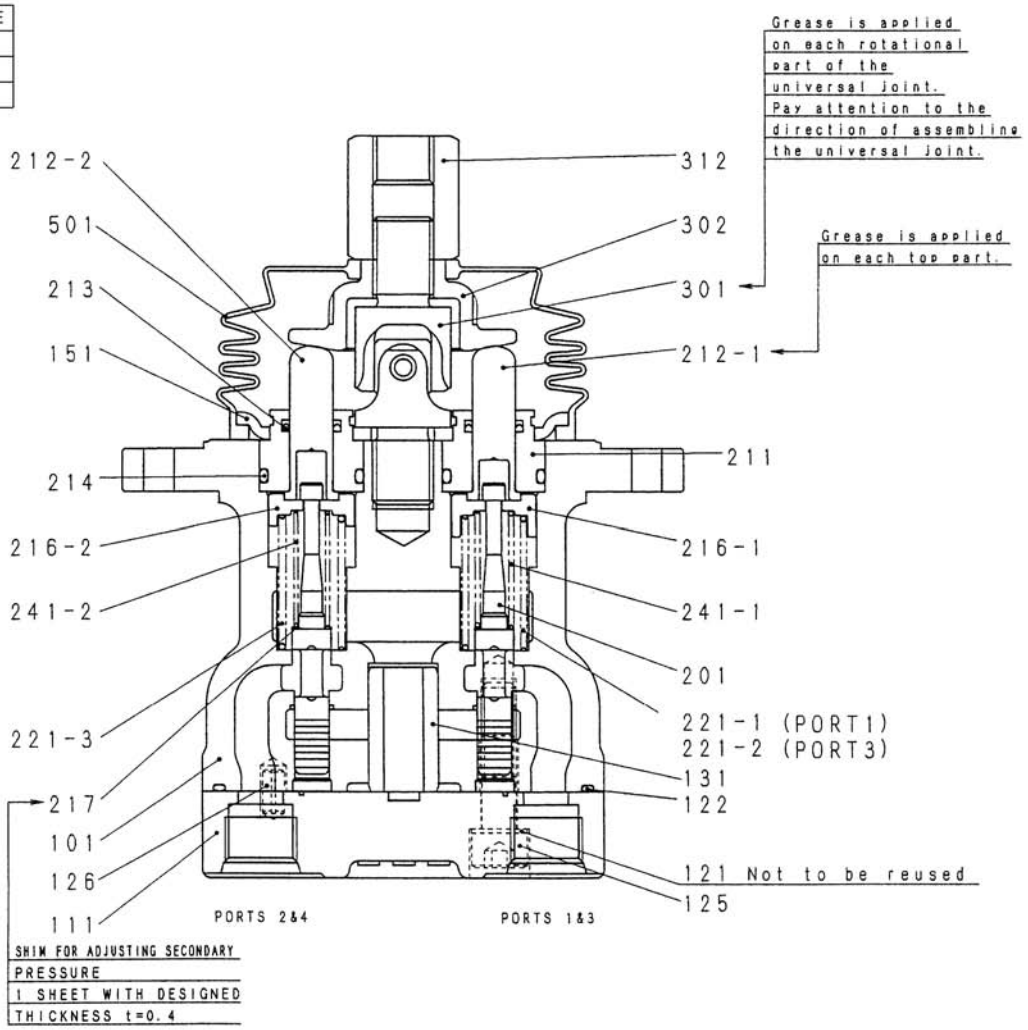

NO.	PART NAME	QTY.	NO.	PART NAME	QTY.
101	CASING	1	216-1	SPRING SEAT 1	2
111	PORT PLATE	1	216-2	SPRING SEAT 1	2
121	SEAL WASHER	2	217	WASHER 2	4
122	O-RING	1	221-1	SPRING	1
125	HEXAGON SOCKET HEAD BOLT	2	221-2	SPRING	1
126	SPRING PIN	1	221-3	SPRING	2
131	BUSHING	1	241-1	SPRING	2
151	PLATE	1	241-2	SPRING	2
201	SPOOL	4	301	JOINT	1
211	PLUG	4	302	CIRCULAR PLATE	1
212-1	PUSH ROD	2	312	ADJUSTING NUT	1
212-2	PUSH ROD	2	501	BELLOWS	1
213	SEAL	4			
214	O-RING	4			

Cross-sectional and Detailed Views of Special Jig Assembly

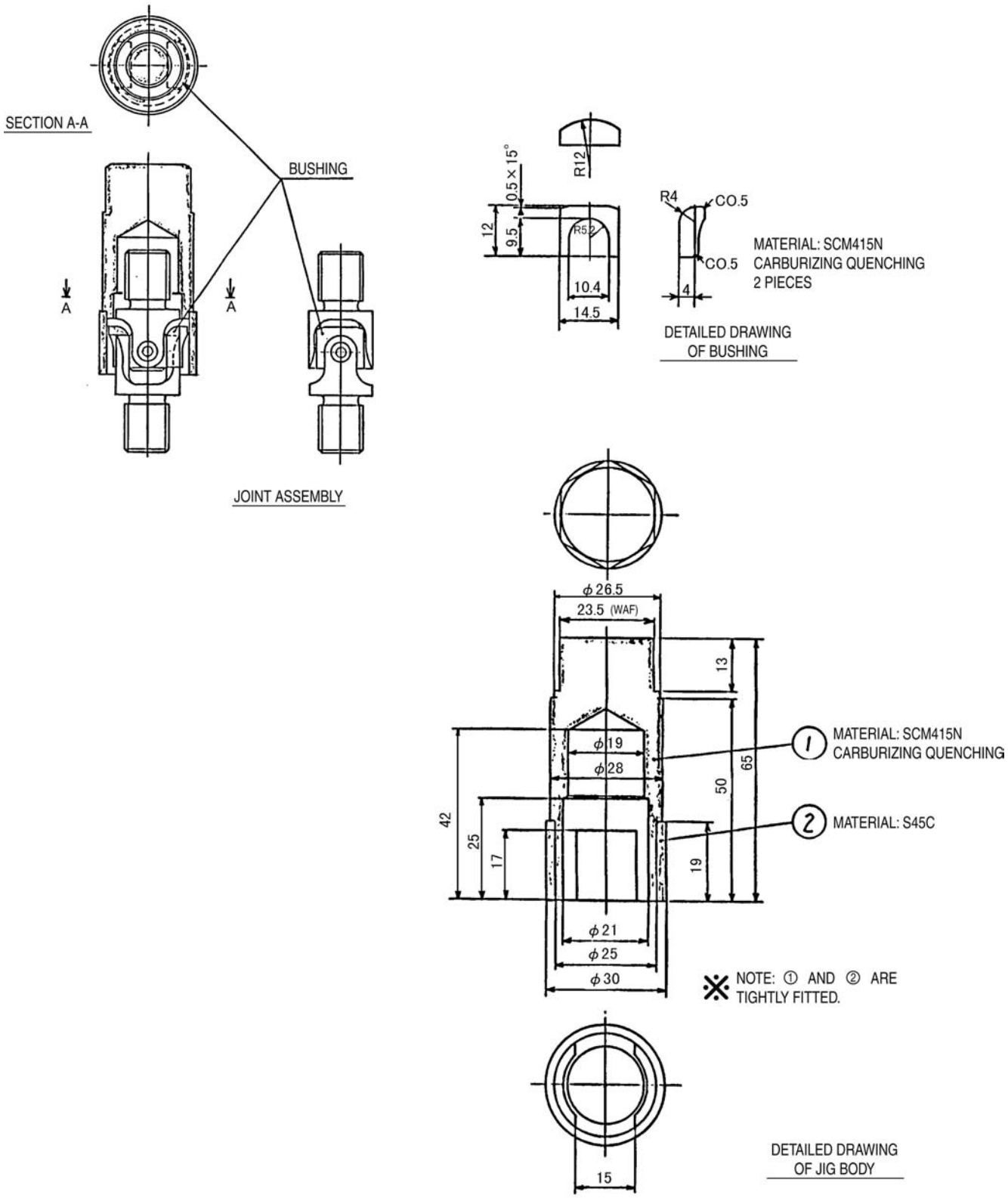

https://truckmanualshub.com/

Remote Control Valve

For Travel Use

⚠	**CAUTION:** Disassembly/reassembly must be conducted at the manufacturer's factory as a general rule. When the circumstances do not allow this, the work should be done at a well-equipped service shop by staff with full knowledge of hydraulic equipment. Handle hydraulic devices carefully because they consist of precision components and have a structure that forms small spaces. Conduct disassembly/reassembly in a clean place that is free of dust following the instructions below. Never attempt to forcedly hit a device when it does not move smoothly.

1. Tools Needed

[1] Vise; for securing valve main body
[2] Small-sized vise (with copper plates at the mouth); for disassembling pressure reducing valves
[3] Hexagon bar wrench (3, 4, 5, 6, 8 mm)
[4] Scriber (or tapered bar of the same shape); for disassembling packing
[5] Hexagon bar for wrench (3, 4, 5, 6, 8 mm)
[6] Torque wrench (compatible for torque range 4.9 to 58.8 Nom)
[7] Bar magnet (for removing steel ball (35) and holder (20))

2. Disassembling Instructions

Disassembling damper selection and pressure reducing valve selection

[1] Cover all ports for valves (P, T, 1, 2, 3, and 4) with blank plugs and clean the outside.
[2] After the valve is cleaned, secure with vise.
[3] Remove the boots (15) (2 locations).
[4] Using a hexagon bar wrench (4 mm), loosen hexagon socket head bolts (2 locations) and remove them from the cams (14)
[5] Pull out pins (16) from covers (17) (2 locations). If a hexagon bar wrench (4 mm) is used to push the pins out from the inside, they will come out easily.
[6] Remove cams (14) (2 locations).
[7] Loosen hexagon socket head bolts (25) using a hexagon bar wrench (8 mm) and remove it along with plain washers (29) (2 locations).
[8] Remove damper section (A) from pressure reducing valve section (B) (2 locations).
Keep an eye on spring (9) since it is not secured.

Disassembling damper selection

[9] Pull out guide (18) and piston assembly (42) from cover (17). (They can be pulled out easily if pressure is applied from the steel ball (35) side.)
[10] Take out steel ball (35), holder (20), orifices (1), (2) and spring (9) from piston assembly (42) (4 locations). Verify the number of orifices (1), (2) in each piston assembly, and group together piston assembly (42) and guide (18) for each hole on cover (17), to keep them separate from the other sets for installation at the original locations later. As orifices (1), (2) serve to prevent backlash in the lever, not having the correct number of orifices will result in backlash. Each part is matched and adjusted independently. If parts removed from one location are taken and installed into a different location when reassembling, the machine will malfunction. As ring (21), orifice (4), spring (22) and steel ball (33) are press-fit with ring (21) into piston assembly (42), they cannot be disassembled.

https://truckmanualshub.com/

[11] Take out O-ring (38) from guide (18) (4 locations).

[12] Remove U-packing (36) from cover (17) using a scriber (4 locations).

Disassembling pressure reducing valve section

[13] Take out pressure reducing valve spool assembly (E) from body (5) (4 locations). Remove stopper (10) from pressure reducing valve spool assembly (E).

[14] Remove spring (7), parallel pin (31) and O-rings (37), (39) from the body (5) (4 locations on each side).

Disassembling pressure reducing valve spool assembly

The outside diameter section of pressure reducing valve spool (3) is fit into a very small space against the hole on body (5). During disassembly, take extra care to avoid damage to the outer surface by placing copper plates at the mouth of the vise that is securing the spool. Do not overtighten the vise, since this may deform the spool.

[15] Secure spool (3) in a small vise (with copper plates at the mouth) and loosen flange bolts (26) with a hexagon bar wrench (3 mm) (4 locations).

[16] Pull out the following parts from spool (3) in the exact order that is written here: flange bolts (26), sleeve (19), spring (6), shims (12), (13), and plain washer (28). (Make sure that you keep each disassembled part with its mate as a set. Verify the number of shims(12), (13).)

3. Reassembling Instructions

Fully clean and degrease parts before reassembling them. The body, in particular, should be cleaned using a nylon brush or equivalent. All seal parts must be renewed. Apply hydraulic oil or a thin coat of grease to all O-rings.

Disassembling pressure reducing valve spool assembly

[1] Secure spool (3) in a small vise (with copper plates at the mouth). Set plain washer (28), shims (12), (13), spring (6) and sleeve (19) in this exact order and fasten them with set screw (27). (Mated parts must be reassembled back the way they were. Different combinations may result in changes in secondary pressure.)

Reassembling pressure reducing valve section

[2] Install O-rings (37), (39), parallel pin (31) and spring (7) onto body (5) (4 locations on each side).

[3] Install pressurer reducing valve spool assembly (E) and stopper (10). The stopper (10) must be installed with its concave surface down (facing the pressure reducing valve spool) (4 locations on each side),
(See Section (D) for detail.)

Reassembling damper section

[4] Install U-packing (36) onto cover (17). The lip of the U-packing must be facing down (facing the damper chamber side) (4 locations on each side). (See Section (C) for detail.)

[5] Insert piston assembly (42) with spring (9) into cover (17). Pistons must be returned to the exact same holes from which they were taken (4 locations). The direction on the circumference in which the piston is installed does not affect the performance.

[6] Install O-ring onto guide (18), then install on cover (17). Also, install the guide back into the same hole on its mating part from which it was taken (4 locations).

[7] Install orifices (1), (2) onto piston assembly (42) which has been inserted into cover. As these orifices serve to absorb backlash in cam (14) when the device is in neutral, it does not matter which is installed first. If the machine had been in use for a long time and there is a large amount of backlash due to wear of pin or other reasons, increase the number of orifices. Do not add orifices when there is no backlash, however, since this causes the pressure reducing valve spool to activate even when the device is in neutral, generating pressure on the secondary pressure port. When you reach the point where there is no backlash when the device is in neutral, do not add any more orifices.

[8] Install holder (20) and steel ball (35) onto piston assembly (42) (4 locations on each side).

https://truckmanualshub.com/

Reassembling damper section and pressure reducing valve selection

[9] Place two damper section (A) on pressure reducing valve section (B) and tighten them with hexagon socket head bolts (25) fit with a plain washer (29). Parallel pin (31), fit on body (5), is set into the hole on cover (17) and serves to position pressure reducing valve (B) and damper section (A) here.
Spring (9) is not secure. Be careful that it does not fall off.

[10] Set cam (14) onto cover (17), then insert pin (16). Check the backlash in cam. If backlash is excessive, add orifices (1), (2) following step 7 above. Steel ball (35) and holder (20) can be easily removed with a magnet. If you do not have a magnet, place the valve sideways and shake it slightly so that valve comes out.

[11] When you are done adjusting the backlash in the cam, apply grease to the sliding part of cam (14), pin (16), cover(17), and steel ball (35).

[12] Tighten two set screws (27) onto cams (14) (2 locations).

[13] Install boots (15) (2 locations).

4. How to Determine Whether a Part Is Still Usable or Not

[1] Do not reuse removed seals for reassembling: seals must be replaced with new ones after each disassembly.

[2] If there is any engagement of the sliding parts in the damper section, such as the cover (17), piston assembly (42) or guide (18), use sand paper (No. 1000) to repair scratches on sliding parts or burrs on corners. If there are too many scratches or burrs to fix in this way, replace with a whole new set.

[3] If there is any engagement of the sliding parts in the pressure reducing valve, such as the body (5) or spool (3), use sand paper (No. 1000) to repair scratches on sliding parts or burrs on corners. Again, they must be replaced with a new set if scratches or burrs cannot be easily repaired by sandpaper.

[4] If there is any engagement on the sliding parts in the cam section, such as the cam (14), pin (16) or cover (17), use sand paper or set files to repair scratches on sliding parts or burrs on corners. If the damage can not be easily repaired, replace with a new set.

https://truckmanualshub.com/

Cross-sectional View of the Assembly

TIGHTENING TORQUE LIST

NO.	SIZE	TIGHTENING TORQUE
24	G 1/8	9.8±0.98 N・m
25	M10	58.8±4.9 N・m
26	M4	4.9±0.98 N・m
27	M8	14.7±1.4 N・m
-	M10 SCREW	42.1±3.9 N・m
-	M10 BOLT	42.1±3.9 N・m
PORT	G 1/4	36.3±2.0 N・m

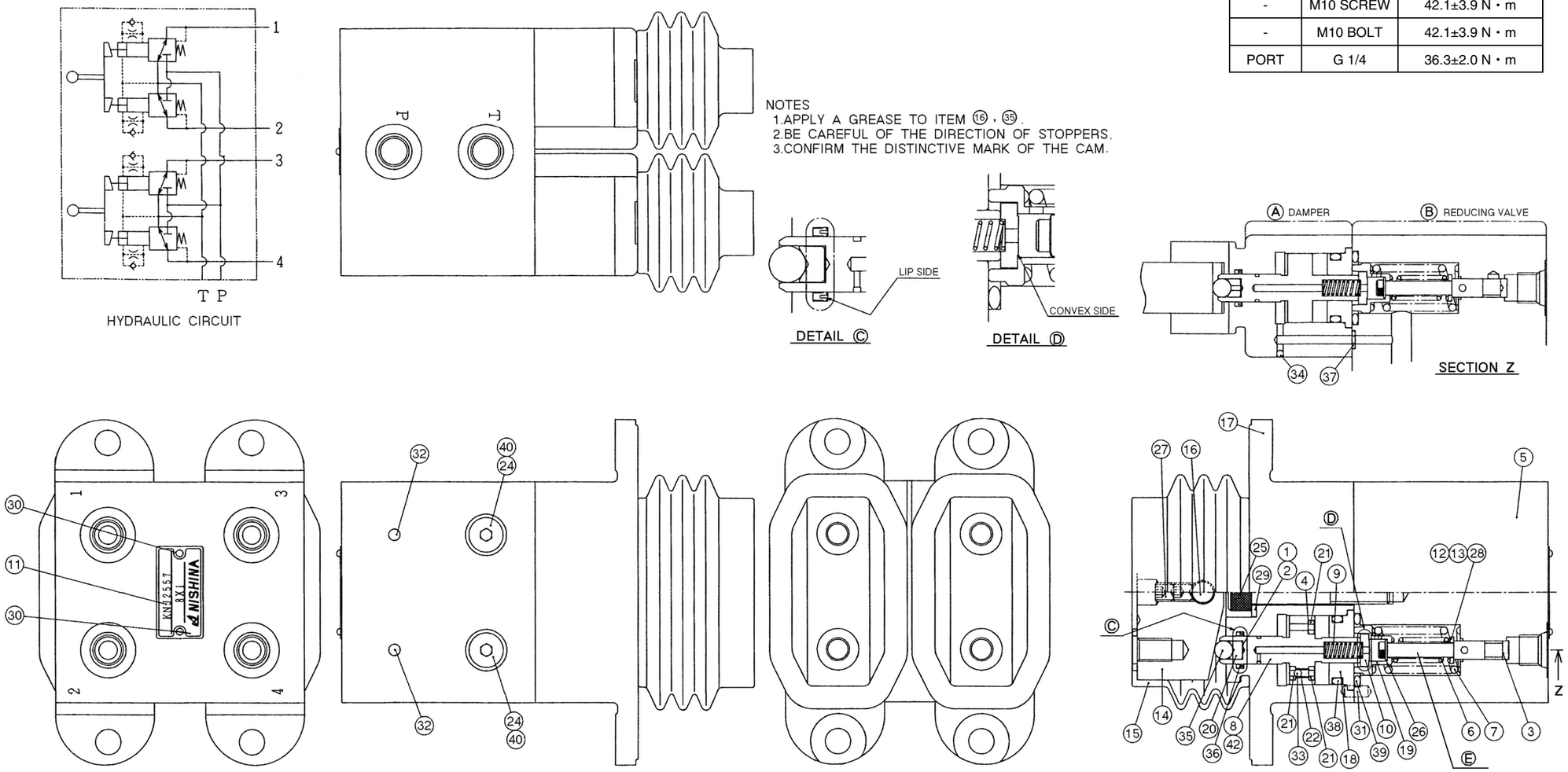

NO	PART MANE	QTY
1	ORIFICE	4
2	ORIFICE	4
3	SPOOL	4
4	ORIFICE	4
5	BODY	1
6	SPRING	4
7	SPRING	4
8	PISTON	4
9	SPRING	4
10	STOPPER	4
11	NAME PLATE	1
12	SHIM	4
13	SHIM	4
14	CAM	2
15	BOOT	2
16	PIN	2
17	COVER	2
18	GUIDE	4
19	SLEEVE	4
20	HOLDER	4
21	RING	12
22	SPRING	4
23	-	
24	PLUG	2
25	HEX SOCKET HEAD BOLT	2
26	FLANGE BOLT	4
27	SET SCREW	4
28	PLAIN WASHER	4
29	PLAIN WASHER	2
30	RIVET	2
31	PARALLEL	4
32	STEEL BALL	2
33	STEEL BALL	4
34	STEEL BALL	4
35	STEEL BALL	4
36	U-PACKING	4
37	O-RING	4
38	O-RING	4
39	O-RING	4
40	O-RING	2
41	-	
42	PISTON ASSY	4

https://truckmanualshub.com/

Solenoid Valve (6-Way)

Assembly Drawing

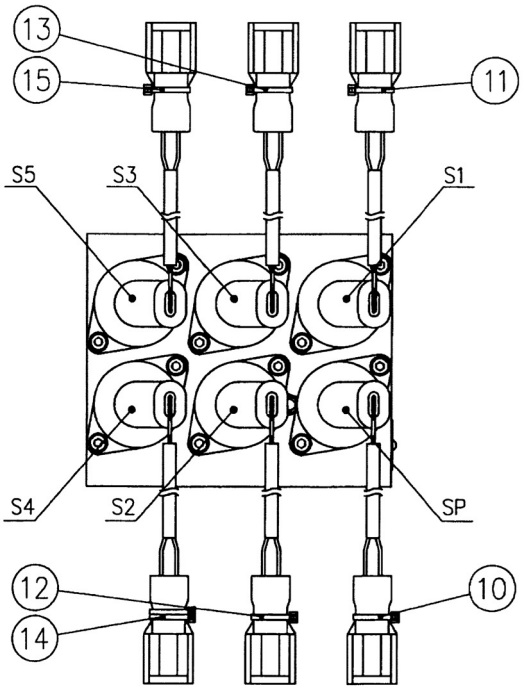

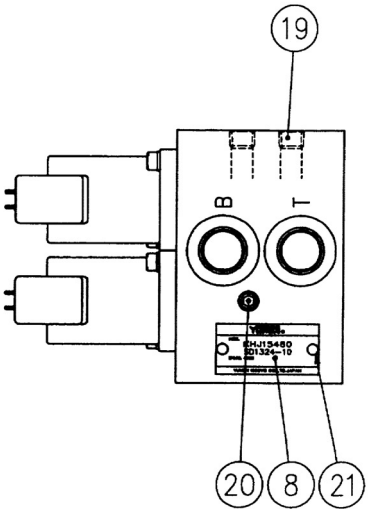

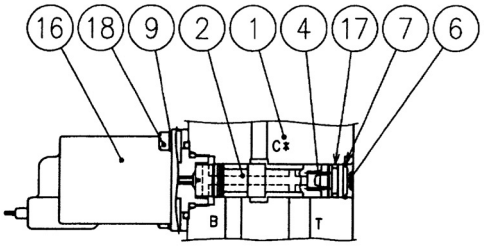

NORMALLY CLOSED TYPE SOLENOID : SP,S1,S3,S4,S5

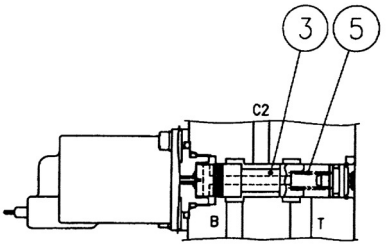

NORMALLY OPEN TYPE SOLENOID : S2

No.	PART NAME	QTY	No.	PART NAME	QTY
1	BODY	1	12	BINDING BAND	1
2	SPOOL	5	13	BINDING BAND	1
3	SPOOL	1	14	BINDING BAND	2
4	SPRING	5	15	BINDING BAND	1
5	SPRING	1	16	SOLENOID	6
6	ADAPTOR	6	17	O-RING	6
7	SNAP RING	6	18	HEX. SOC. HD. BOLT	12
8	NAME PLATE	1	19	PLUG	6
9	SPRING WASHER	12	20	PLUG	4
10	BINDING BAND	1	21	RIVET	2
11	BINDING BAND	1			

https://truckmanualshub.com/

Theory of operation

The hydraulic fluid supplied from the port P is fed to the solenoid operated directional valves S1 to S5 when the valve SP is energized. The hydraulic fluid is then fed to the ports C1 to C5 depending on whether or not the valves S1 to S5 are energized.
Electromagnetic selector valves S1, S3, S4 and S5:
Oil passes through when energized
Electromagnetic selector valve S2:
Oil passes through when not energized

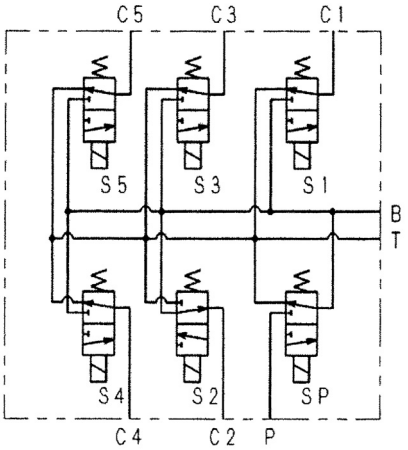

Maintenance

1. Assembling and Disassembling Precautions

[1] Disassemble the valve with due attention not to damage the O-ring and other parts, and store the parts in a safe place.
[2] If there is any flaw on the O-ring, replace it with a new one.
[3] Be careful to assemble the parts in the correct orientation and without forgetting any of the parts.
[4] When assembling, reverse the order of disassembling and pay attention not to allow any foreign matters such as dirt to get into the valve.

2. Assembling and disassembling a Solenoid Operated Directional Valve

[1] Remove the mounting bolts from the solenoid (C) and remove the coil part.
(Tool: 3 mm Hexagon wrench)
[2] Remove the tube, while paying attention not to damage the edges of the flat portion of the core. However, if the core is removed, replace the O-ring (A) with a new one.
(Tool: 23 mm spanner)
[3] Take out the spools (2) and (3) and the springs (4) and (5).
[4] Pry the snap ring (7) off by inserting a flat head screwdriver or the like in the notch, and remove the adapter (6).
[5] Assemble the valve by reversing the order of disassembling. When tightening the core, pay attention not to damage the edges of the flat portion of the core.
When mounting the adaptor, apply grease or other appropriate lubricant to the O-ring (B) and pay attention not to damage the O-ring.

https://truckmanualshub.com/

Solenoid Valve (6-Way)

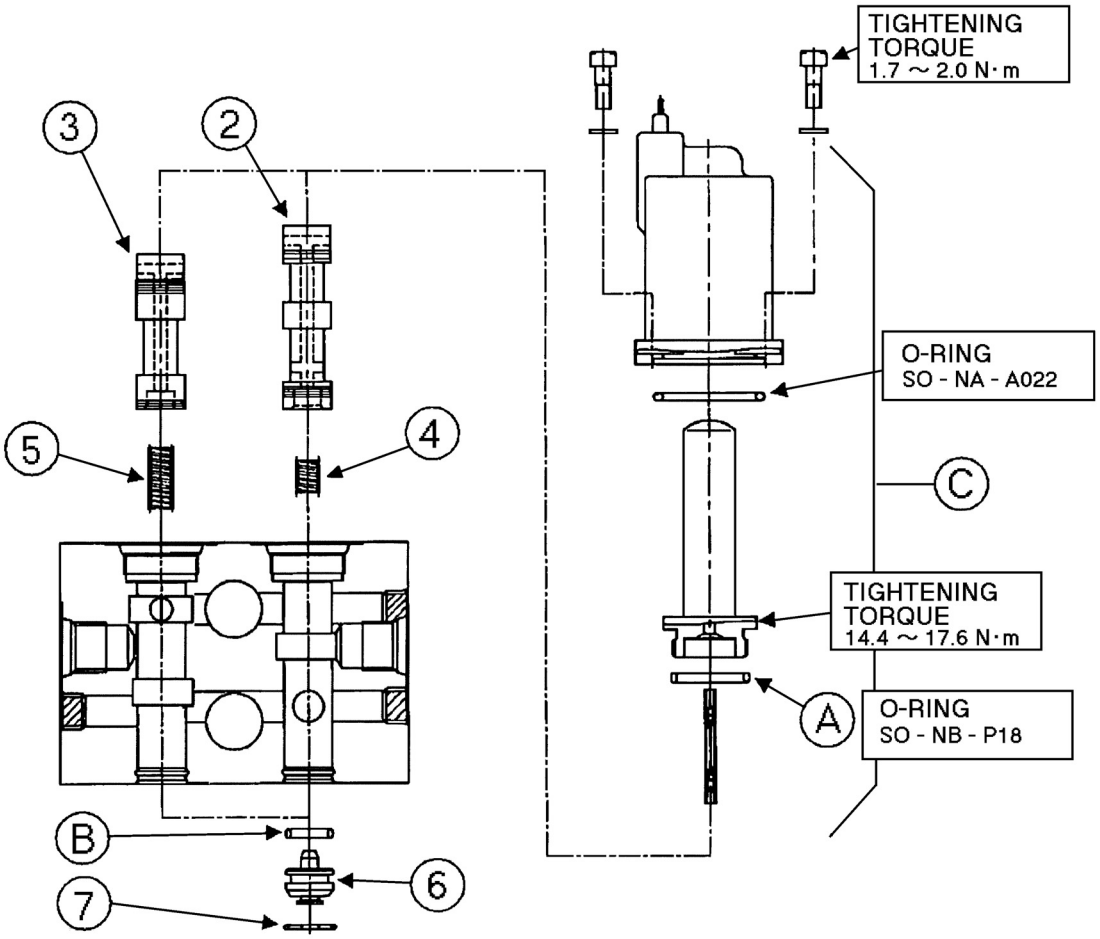

ELECTRONIC SELECTOR VALVE SP,S1,S3,S4,S5 → ITEM No. ② ASSEMBLY
ELECTRONIC SELECTOR VALVE S2 → ITEM No. ③ ASSEMBLY

https://truckmanualshub.com/

3. Maintenance standards

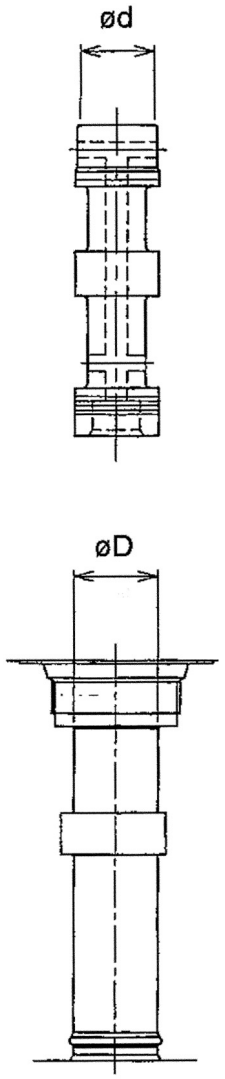

Measure the clearance between the body and the spool.
Clearance = ϕD - ϕd
Reference value: Approx. 0.01 mm

4. Troubleshooting

Problem	Cause	Action
Spool malfunction	Foreign matters galling the spool	Remove the foreign matters, dismount the valve, perform flashing, or replace the fluid.
	Damaged parts or abnormal wear	Replace the valve.
Solenoid malfunction	Terminal disconnection	Insert the terminal.
	Damaged coil	Replace the solenoid.
	Broken lead wire	
Fluid leakage to outside	Loose bolts	Tighten the bolt to the specified torque.
	Damaged O-ring	Replace the O-ring.
	Loose hex socket plug	Fasten the plug.

https://truckmanualshub.com/

Safety Precautions

In this instruction manual, safety precautions are classified into three ranks: DANGER, WARNING, and CAUTION. These words are defined as follows:

DANGER	Indicates an imminent danger that is very likely to cause death or severe injury unless the situation is avoided.
WARNING	Indicates a potential danger that may cause death or severe injury unless the situation is avoided.
CAUTION	Indicates a potential danger that may cause a minor or moderate injury or that may result in property damage.

Note that even precautions labeled "CAUTION" may cause serious harm. Since all precautions are important regardless of their rank, be sure to follow all of them.
YUKEN KOGYO assumes no liability for any accident causing death, injury, or property damage caused by the unauthorized use or handling of the product or information contained herein.

https://truckmanualshub.com/

The following are specific important safety precautions that you must observe:

DANGER

Do not use the product in an EXPLOSIVE ATMOSPHERE, such as where flammable gas or powder is handled. Otherwise, combustion or ignition may result in a fire or explosion, possibly causing death or severe injury.

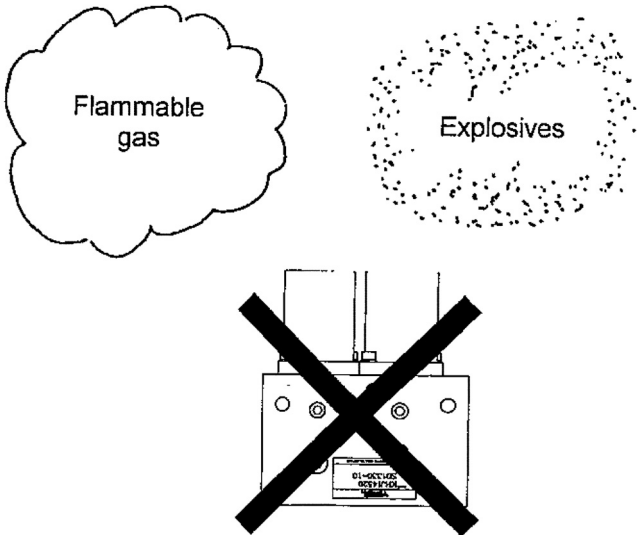

Foreign matters (debris) in the hydraulic fluid can cause the hydraulic system to malfunction.
Always keep the hydraulic fluid clean (pollution level within class NAS 1638-8) and use 10-micrometer or less line type filters.

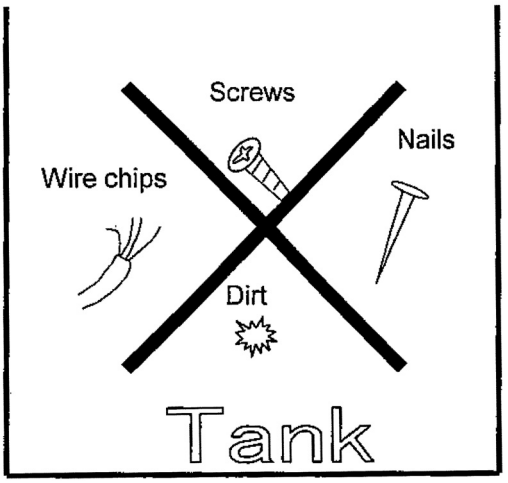

WARNING

Do not perform wiring, assembly, or maintenance inspection with the power on.
Doing so may result in electric shock, burns or death.

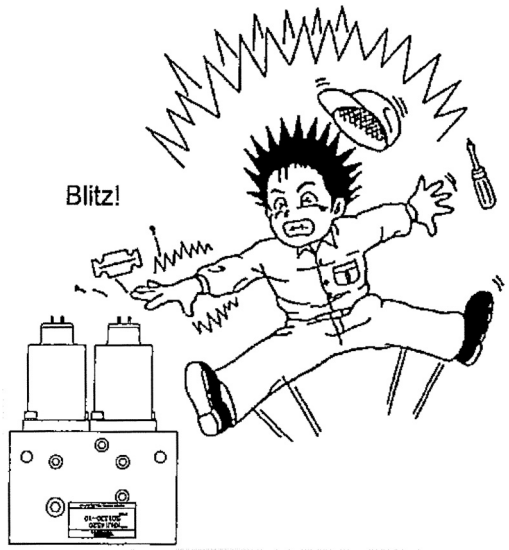

Do not modify the product. Doing so could create a hazardous situation, resulting in a malfunction or reduced performance.

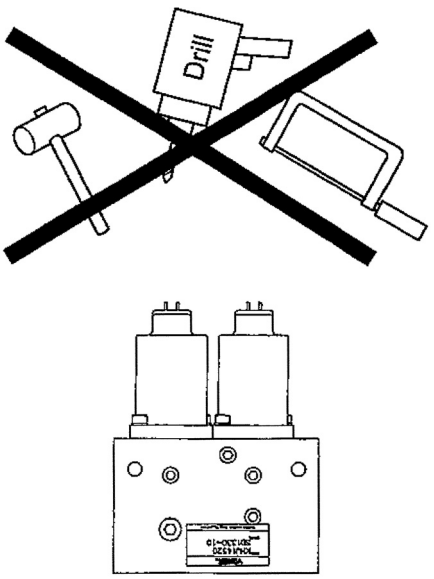

https://truckmanualshub.com/

The following are specific important safety precautions that you must observe:

CAUTION

Do not step or stand on the product or put any heavy object on it. Doing so may damage the product or hydraulic system and may result in an injury from falling.

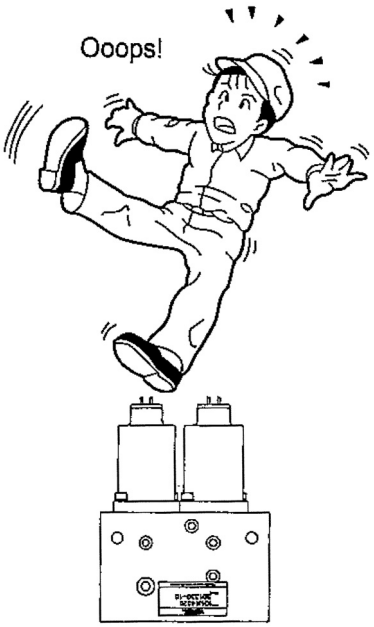

Valve characteristics may vary with the load pressure or fluid temperature. Adjust the product so that it can accelerate, decelerate, and stop the flow of hydraulic fluid safely throughout the actual operating ranges of pressure and fluid temperature.

https://truckmanualshub.com/

Cushion Valve

Operational Description

1. Assembly Drawing

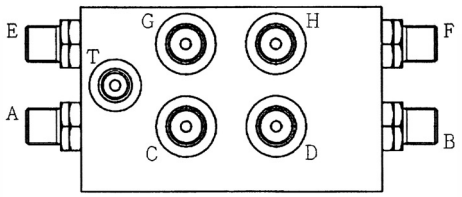

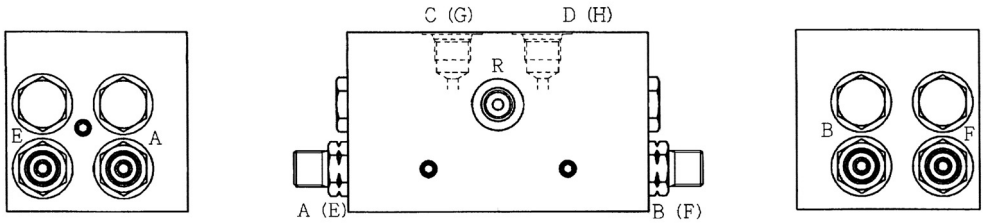

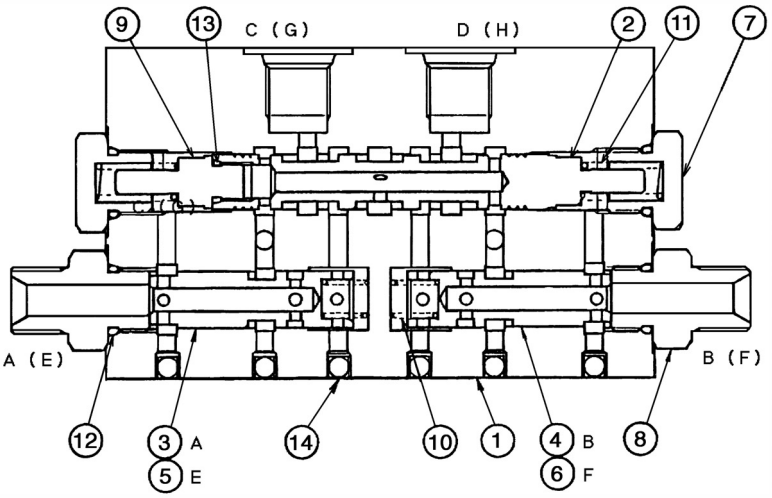

TIGHTENING TORQUE LIST

No.	SCREW SIZE	TIGHTENING TORQUE
7, 8	G 3/8	40 ~ 50N-m

No.	PART NAME	QTY	No.	PART NAME	QTY
1	BODY	1	8	ADAPTER	4
2	SPOOL	2	9	SPRING GUIDE	2
3	SPOOL	1	10	SPRING	4
4	SPOOL	1	11	SPRING	4
5	SPOOL	1	12	O-RING	8
6	SPOOL	1	13	O-RING	2
7	RETAINER	4	18	PLUG	15

https://truckmanualshub.com/

2. System Drawing

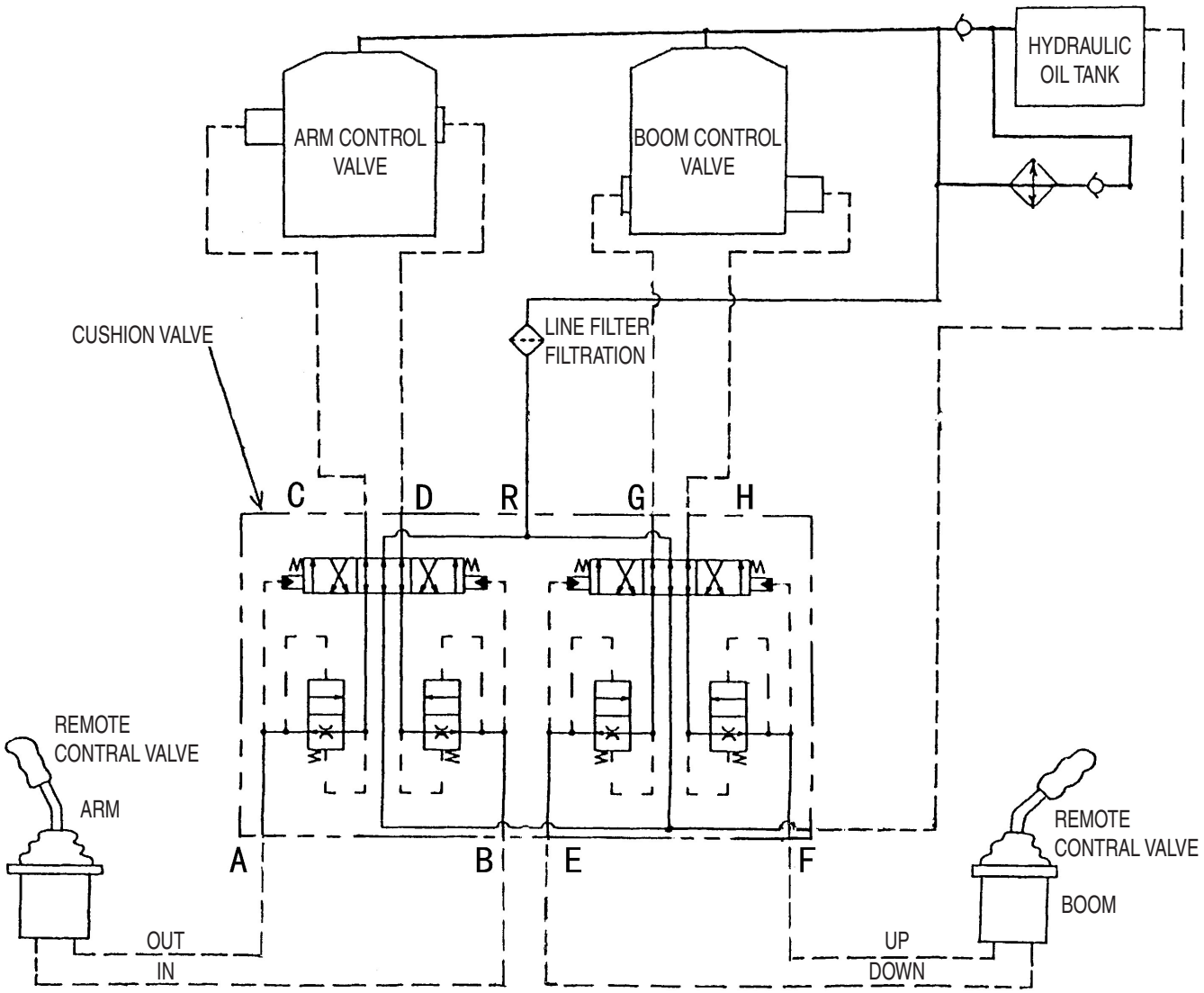

https://truckmanualshub.com/

3. Operational Description

(1) Lever in neutral

[1] The heat oil separated from the oil cooler line enters the cushion valve Port R.

[2] Then, the oil passes the reverse notch spool and goes through passages e and f. After passing the outer circumference of each cushion spool, the oil returns to the hydraulic oil tank via the cushion valve Port T.

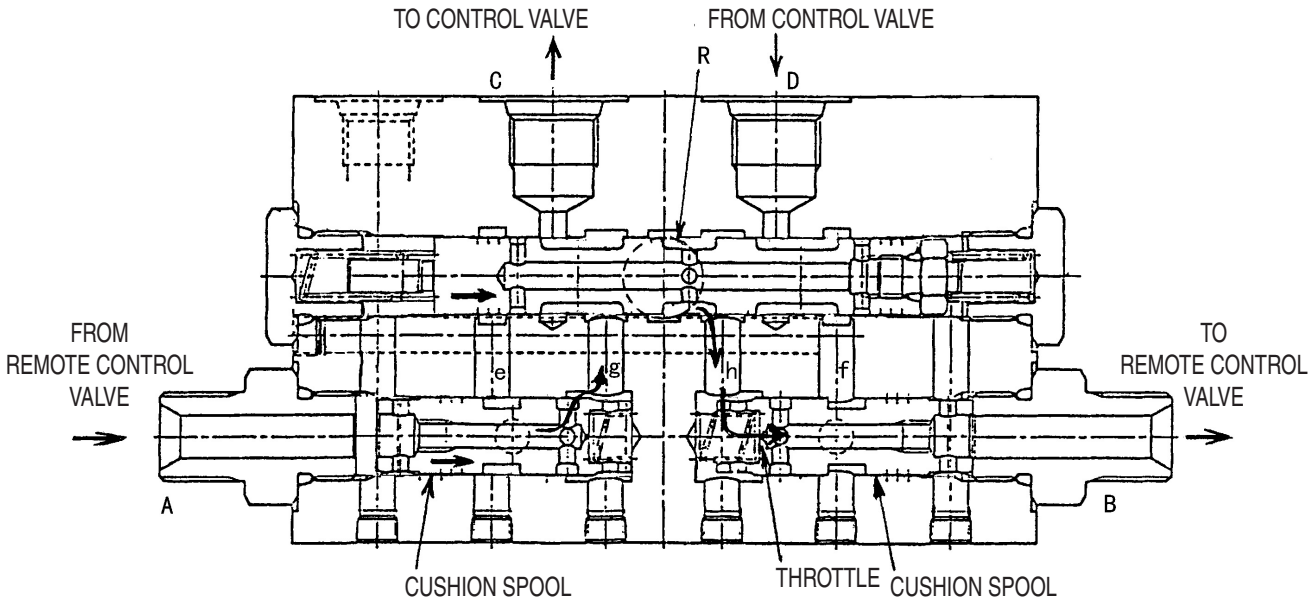

(2) Arm OUT, operating

[1] Pilot pressure enters the cushion valve at Port A from the remote control valve. As this pilot pressure enters the left end of the cushion spool and the left end of the reverse notch spool, each spool moves to the right.

[2] The pilot pressure in the cushion spool enters the chamber g via the spool opening. Then, the pressure passes the outer circumference of the reverse notch spool and goes into the control valve via Port C.

[3] The pilot pressure return oil from the control valve passes the outer circumference of the reverse notch spool and goes into the chamber f via Port D. Then, the oil passes the outer circumference of the cushion spool and returns to the hydraulic oil tank through Port T.

[4] At this time, as the reverse notch spool is switched over to the right, the passages e and f are closed to the heat oil at the Port R. Therefore, the oil passes passage h and enters the left end of the cushion spool. The heat oil passes the cushion spool throttle and enters the remote control V via Port B. (The heat oil releases the remote control valve.)

https://truckmanualshub.com/

(3) Arm OUT, stopped

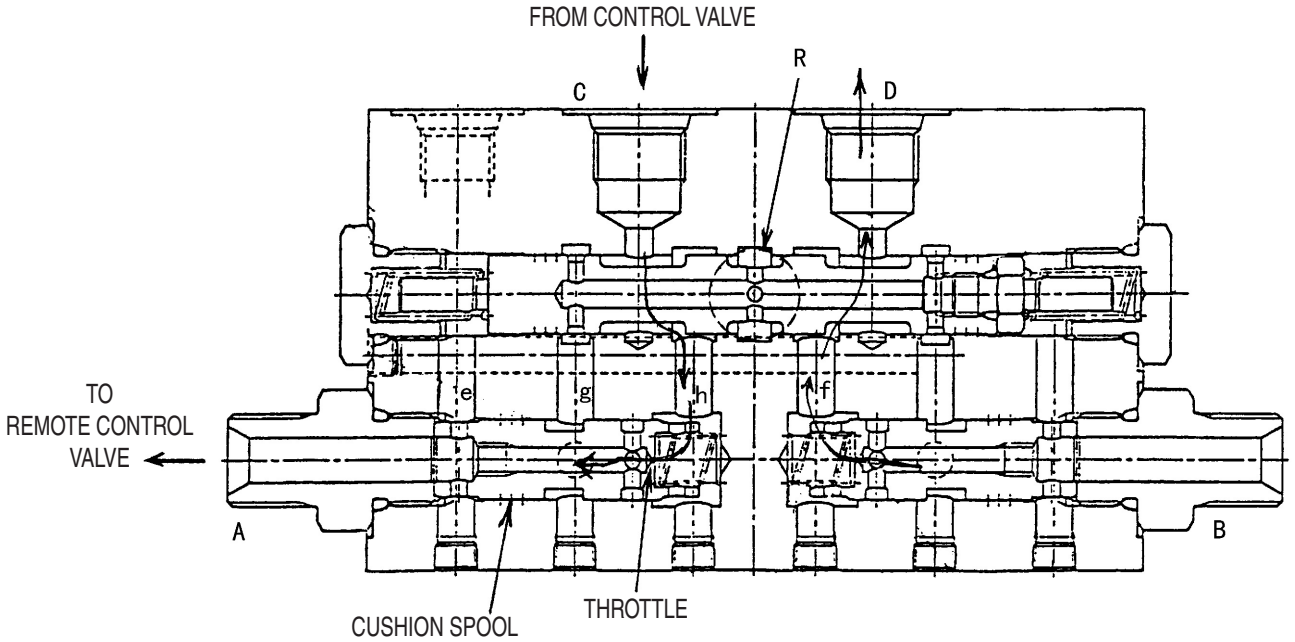

[1] As the pilot pressure from the remote control valve stops, the reverse notch spool returns to the neutral position.

[2] The cushion spool also returns to the neutral position and the pilot return oil from the control valve passes the throttle.

[3] Due to this restricting effect, the spool of the main control valve returns gradually to the neutral position.

https://truckmanualshub.com/

Reinforcement Parts List

Place	Code	Part No.	Shape	Qty	Outer shape (mm) / Weight (kg)
Boom	1	KSV1570	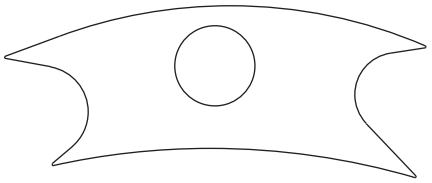	2	t12 × 900 × 2200 198.9
Standard Arm (3.2 m)	2	KSV1576	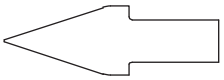	1	t12 × 290 × 900 15.0
	3	KSV1577		2	t12 × 150 × 350 4.8
	4	KSV1578	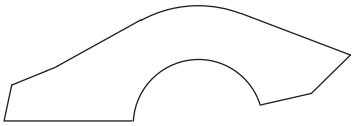	2	t12 × 490 × 1450 67.0
	5	KSV1595	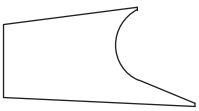	2	t8 × 420 × 800 24.6
	6	KSV1596	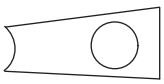	1	t8 × 300 × 650 7.5
	7	KSV1597	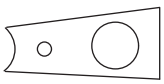	1	t8 × 300 × 650 7.4
	8	KSV1598	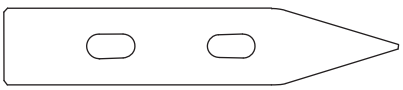	1	t8 × 320 × 1650 26.2
	9	KSV1599		1	t8 × 320 × 3000 54.7

https://truckmanualshub.com/

Attachment Reinforcement Procedures

Place	Code	Part No.	Shape	Qty	Outer shape (mm) / Weight (kg)
Short Arm (2.6 m)	10	KSV1576	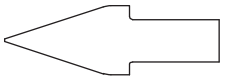	1	t12 × 290 × 900 / 15.0
	11	KSV1598	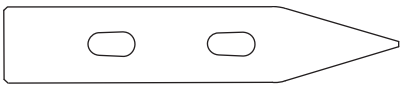	1	t8 × 320 × 1650 / 26.2
	12	KSV1600	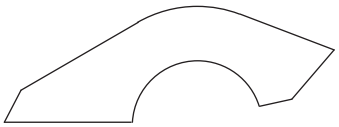	2	t12 × 490 × 1380 / 62.7
	13	KSV1601	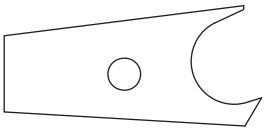	2	t8 × 510 × 1080 / 41.8
	14	KSV1596	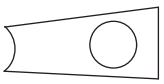	1	t8 × 300 × 650 / 7.5
	15	KSV1597	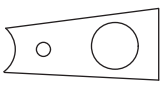	1	t8 × 300 × 650 / 7.4
	16	KSV1602	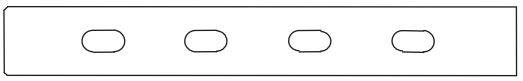	1	t8 × 320 × 2380 / 43.3

https://truckmanualshub.com/

Boom Reinforcement Diagram

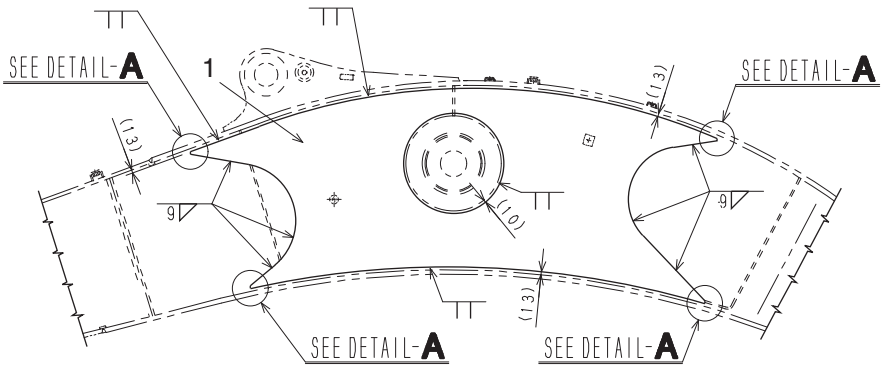

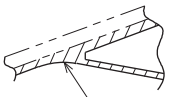

Note 1

4 points on both sides,
total of 8 points

DETAIL-A

[Note 1] Smooth on grinding notches,
Craters & cracks not allowed

KSV1592X-B00

https://truckmanualshub.com/

Standard Arm (3.2 m) Reinforcement Diagram

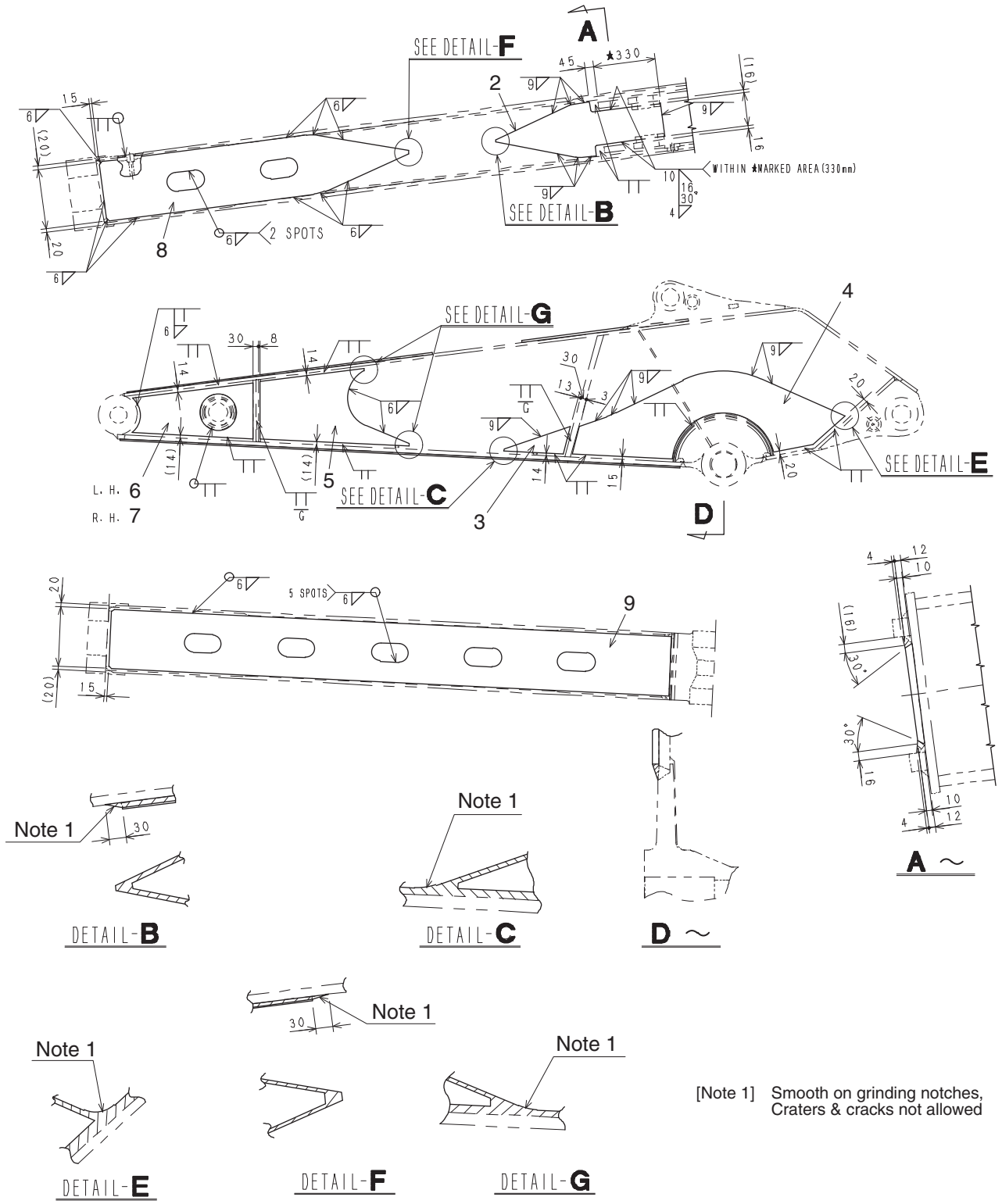

[Note 1] Smooth on grinding notches, Craters & cracks not allowed

KSV1593X-D00

https://truckmanualshub.com/

Short Arm (2.6 m) Reinforcement Diagram

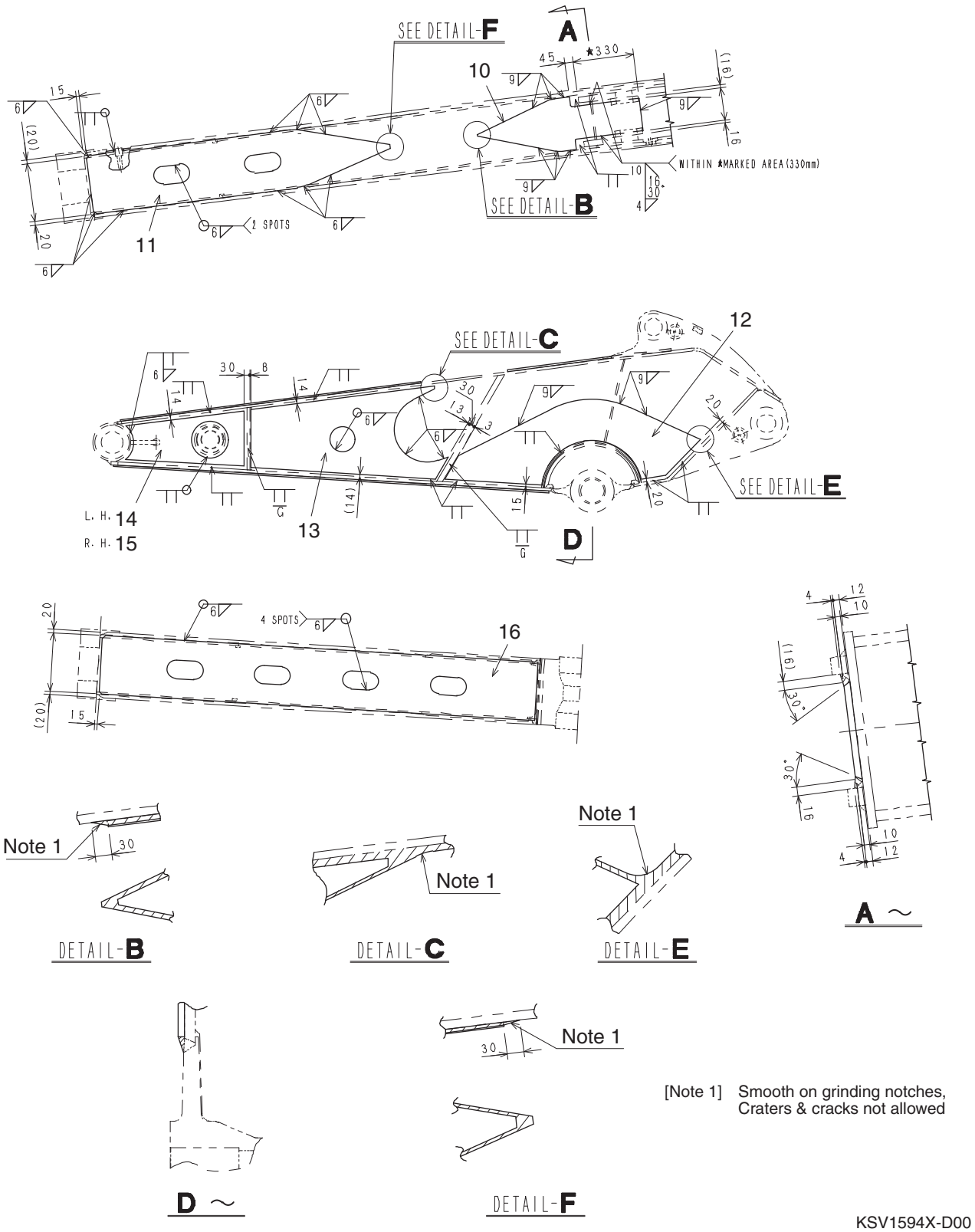

[Note 1] Smooth on grinding notches,
Craters & cracks not allowed

KSV1594X-D00

https://truckmanualshub.com/

Using Technical Information

Second Edition : 01/2002

Symbols

The following symbols are used in this Shop Manual to bring your attention to the particularly important information for safety, quality, etc.

Symbol	Description	Symbol	Description
	Warning Indicates precautions for safe operations.		Weight Indicates the weight of parts to advise caution for the operation.
	Internal pressure Indicates that caution is needed because internal pressure exists.		Adjustment Indicates items that require adjustment.
	Caution Indicates precautions to avoid damage to devices.		Measurement Indicates items to be measured for inspections. (Dimensions and other information)
	Tightening torque Indicates specified tightening torques.		Measurement Indicates items to be measured for inspections. (Current, Voltage and other information)
	Lubrication Indicates parts to be lubricated with oil.		Visual inspection Indicates items to be inspected visually.
	Grease Indicates greasing points.		Cleaning Indicates items to be cleaned during disassembling and assembling.
	Adhesive Indicates application of adhesive or liquid packing.		
	Adding grease Indicates additional greasing.		
	Oiling Indicates adding of oil or other lubricants.		

https://truckmanualshub.com/

Platform Plate for Repair

First Edition : 11/2005

Platform

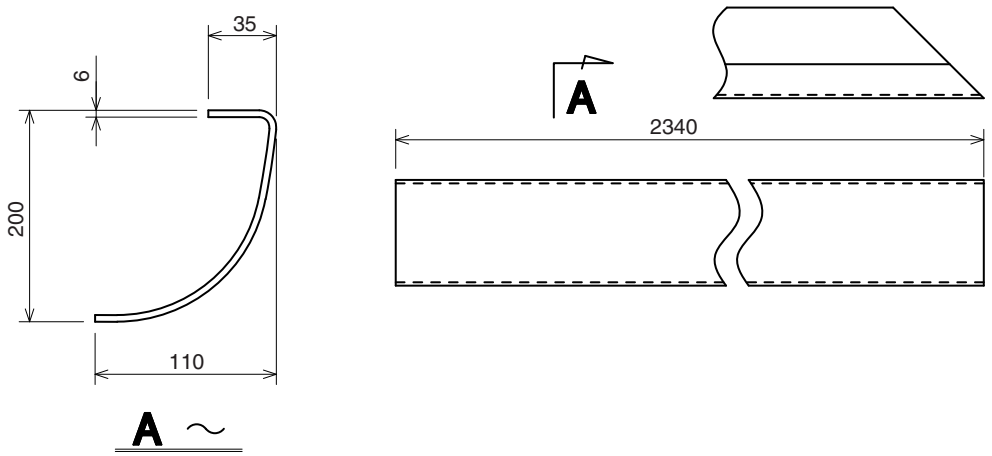

PART NO.	WEIGHT (kg)
KSP0943	30.8

https://truckmanualshub.com/

Maintenance and inspection methods

- Before performing inspection and maintenance, read the "Inspection and Maintenance Section" thoroughly.ì

Inspect and maintain the machine on level ground

[1] Choose a safe place with level and hard ground.
[2] Lower the bucket to the ground,
[3] Stop engine and remove key.
[4] Apply brakes to the shoes.

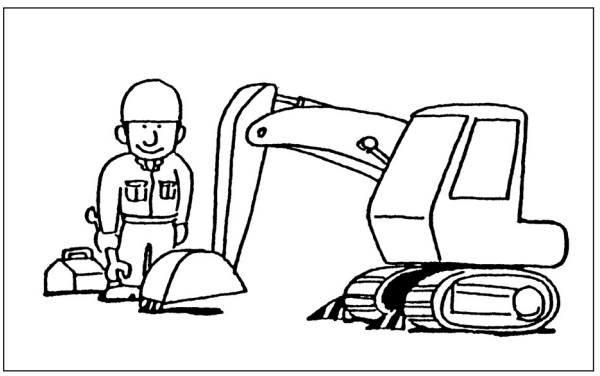

Display a sign "Inspection Under Way"

- Hang a plate indicating "Inspection / Maintenance Under Way" on the door or operating lever.

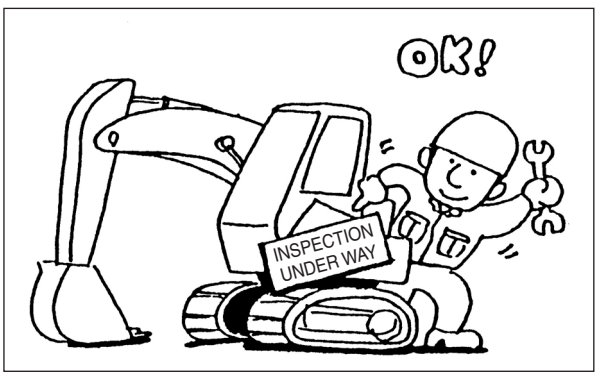

Important safety parts

- Parts related to safety and fire prevention are specifically referred to as "Important Safety Parts". Replace these parts regularly.
- "Important Safety Parts" include parts which are difficult to determine the part life by their exterior appearance. Replace these parts regularly even if there are no apparent abnormalities.
- If any abnormality is found before the replacement interval, change and repair the part.

https://truckmanualshub.com/

Do not attempt to maintain moving parts

- Avoiding adjustments during driving if possible.
- Repair or adjustments are inevitable, two or more technicians should work jointly.
- Pay special attention and avoid entanglement of clothing in rotating parts.

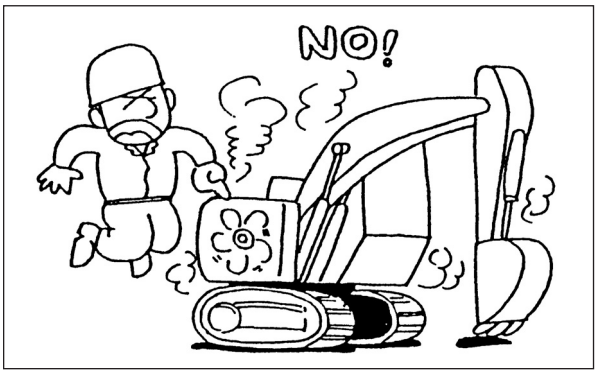

The machine is very hot right after the engine stops!

- All parts of the machine are very hot just after the engine stops. Touching anything may result in skin burns.
- Start inspection/maintenance after all parts have cooled down.

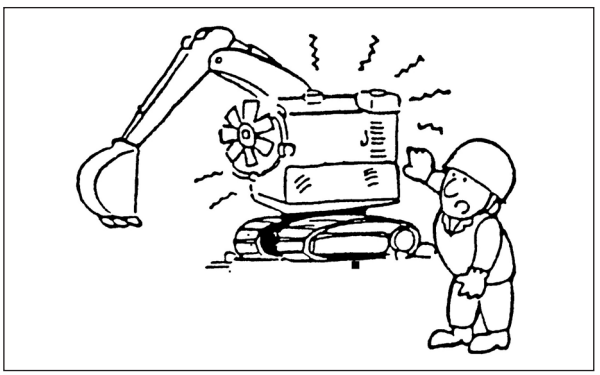

Opening hoods and covers

- Do not open the engine hood while the engine is rotating.
- Engage locks whenever you open the engine hood or covers.
- Do not open the engine when the wind is strong.

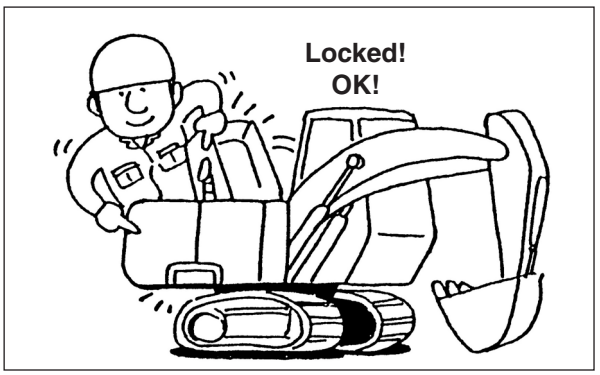

https://truckmanualshub.com/

Fire prevention

- Use incombustible oils for cleaning parts.
- Extinguish flames which may cause fire hazards.
- Prepare fire extinguishing appliances such as extinguishers.
- Do not smoke while inspecting and maintaining the machine.

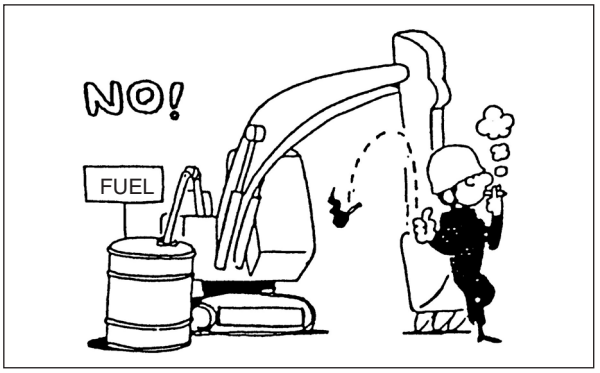

Use protective appliances

- Wear protective goggles, helmets, safety shoes and gloves when conducting maintenance work.
- Always wear protective appliances when doing grinding and hammering work since metal debris flies out.

USE TOOLS IN A PROPER MANNER.

Conducting maintenance work in high places

- Put everything in order around the footing area.
- Do not spill oil or grease and do not leave tools lying around. Be careful not to slip while the machine is running.
- Use tools or handrails when climbing up or dismounting. Also, be careful of slippery surfaces.
- DO NOT jump from higher places.
- When working together, decide on and use signals.
- When working together, follow the instructions from the leader.

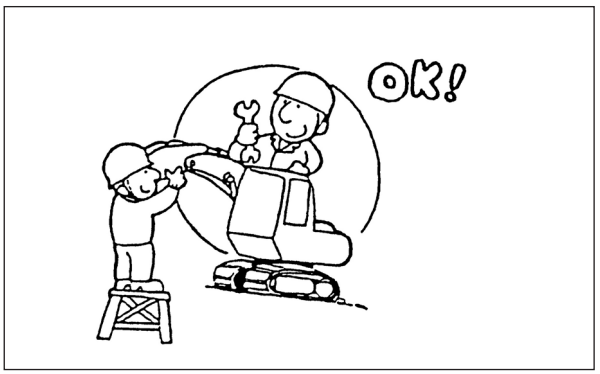

https://truckmanualshub.com/

Holding attachments

- It is very dangerous to replace or repair joints/hoses while holding an attachment in the air. Always lower it to the ground or place it on blocks.

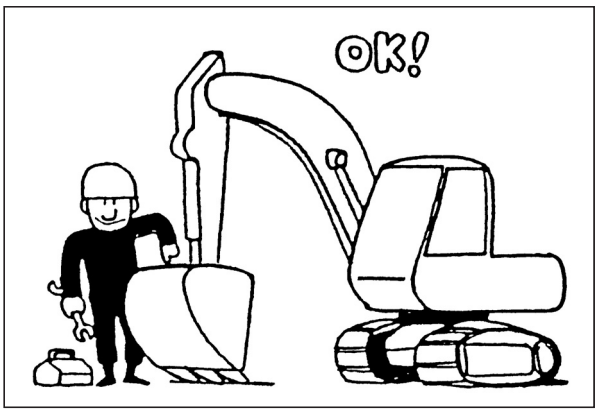

When conducting maintenance work underneath the machine

- When working under the machine, use safety supports or safety blocks under the crawlers to support the machine.

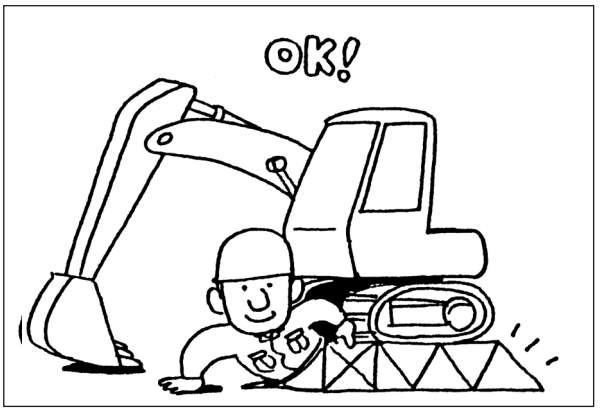

Be prepared in case of emergency!

- Decide where to contact and how to handle the situation in case of an accident or fire. Additionally, investigate places where extinguishers and first-aid boxes are stored.

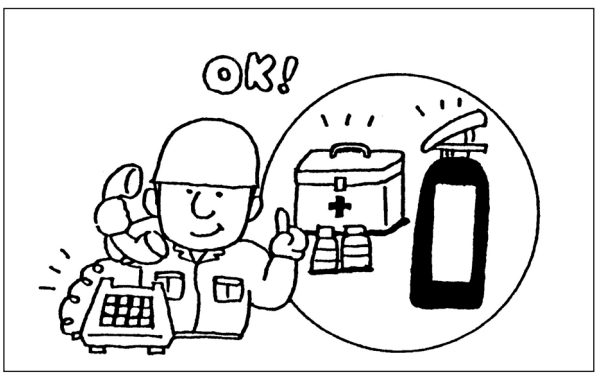

https://truckmanualshub.com/

Release oil pressure before starting maintenance

- Prior to inspection/maintenance, release air pressure and oil pressure in circuits after the parts have cooled down.
- When servicing electric systems, disconnect the negative (-) battery terminal before starting the work.

High pressure oil

- Pipes and equipment inside of the excavator are filled with high pressure oil.
- It is very dangerous to perform inspections/maintenance when oil pressure exits, because the oil could flow out.
- If leakage of high pressure oil from a small hole contacts the skin or eyes, it may cause injury. If you touch high pressure oils, get medical treatment immediately.
- If the oil is hot, it may cause burns. Wear protective goggles and gloves when conducting inspection/ maintenance.

Battery

- Batteries emit flammable gases. Always keep flames away.
- The battery electrolyte contains dilute sulfuric acid. If the fluid touches the skin, immediately wash it off with water and then wash fully with soap. If it gets in the eyes, after flushing them with plenty of water, get medical help.
- Before checking and handling the battery, turn off the power supply (by placing the starter switch to OFF).
- If you use or recharge the battery while the battery electrolyte is lower than the lower level indicated on the side of the battery, it may cause breakage (explosion).
- Check the level of the battery electrolyte and battery mounting conditions, and check the voltage using a tester on a regular basis.

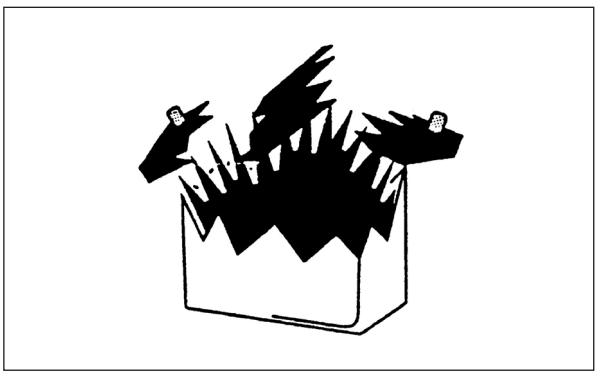

https://truckmanualshub.com/

Removing the battery

- Before inspecting the electric system, disconnect the negative (-) battery terminal.
- Batteries emit flammable gases and may cause ignition and explosion. Battery electrolyte contains dilute sulfuric acid. Handle the battery with extreme care.

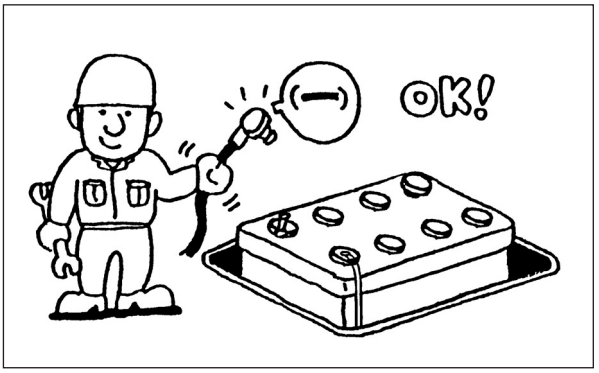

Ventilation

- When conducting maintenance work in poorly ventilated locations indoors, keep doors and windows open and ventilate air to avoid gas poisoning.

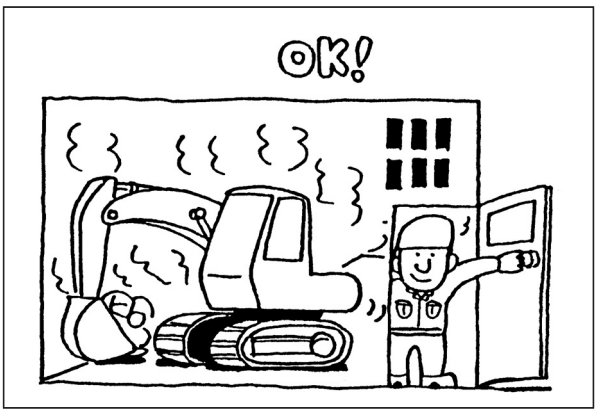

Handling high pressure hoses

- Kinks and cracks on high pressure hoses could cause breakage. Do not use any hoses with kinks and cracks.
- If fuel hoses or hydraulic oil hoses are loose or cracked, they could cause fire. Always repair them immediately.

Parts that have been removed

- Place removed parts in a stable condition; otherwise, they may fall down and become dangerous.
- Keep children and bystanders away from the parts storage area.
- When the ground is not hard and solid, parts may sink or fall down from their own weight. Arrange the parts storage area in a place which has level and hard ground.
- If soil or dirt gets inside pipes, it could cause malfunction or errors. Plug or cap pipes of removed parts.

https://truckmanualshub.com/

Use manufacturer's genuine parts

- Always use the manufacturer's genuine replacement parts, oils and greases. In addition, apply oils and greases compliant to temperature conditions.
  Major inspections and maintenance work should be conducted in our Service Shops.

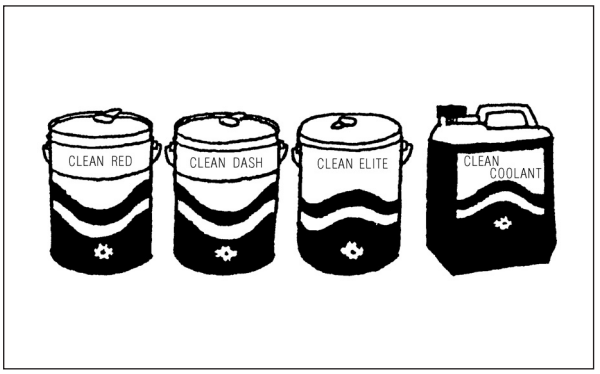

First clean the machine, then check and repair it

Cleaning machines makes it easy to detect failures and faults.
Keep the oil filler and oil level gauge clean and avoid dust and dirt entry.

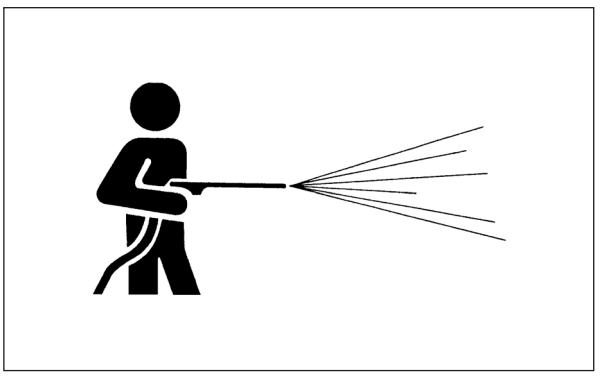

Washing vehicles

[1] When washing the machine, be careful not to splash the electrical equipment.
- Monitors and electrical equipment in the operator's cab.
- Do not apply steam directly to battery, connectors and other electrical equipment.

[2] Do not apply high pressure washing steam directly to the radiators.
Wash the radiator carefully and gently.

Keep fluids free of water and dirt

When adding fuel/hydraulic oil/engine oil, keep them free of water, dust and other contaminants.
Do not add fuel or oil with the strainer removed from the filler port.

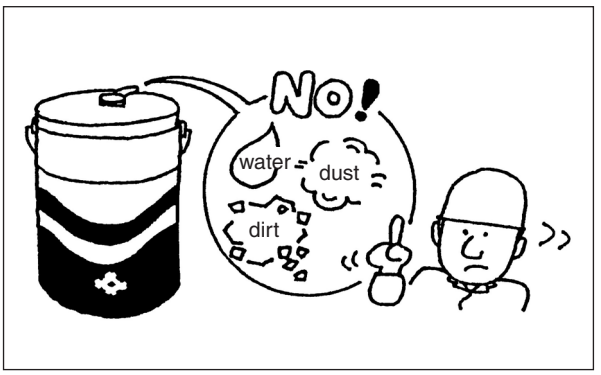

https://truckmanualshub.com/

Draining oil and changing filters

- It is dangerous to drain water or oil and replace filters just after the engine stops. Carry out the work after each part has cooled down (approximately 20-40℃).
- When changing oil or changing filters, inspect the drained oil and old filters and check for metal debris or foreign substances.

If a large amount of metal debris is detected, contact our Service Shop for repairs.

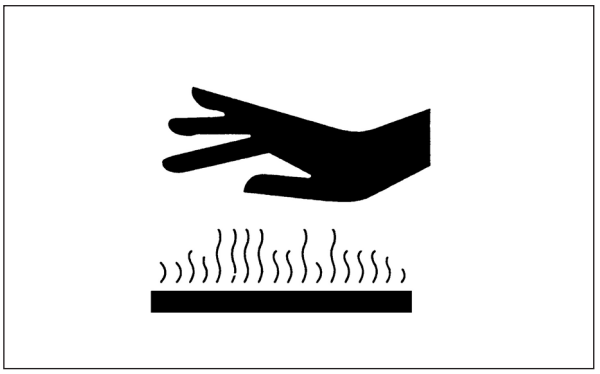

Disposal of waste fluids

- Do not pour waste fluids on the ground, or into rivers, lakes and marshes. They can harm the environment.
- When disposing of oil, fuel, coolant, solutions, filters and other harmful substances, follow local rules and regulations.

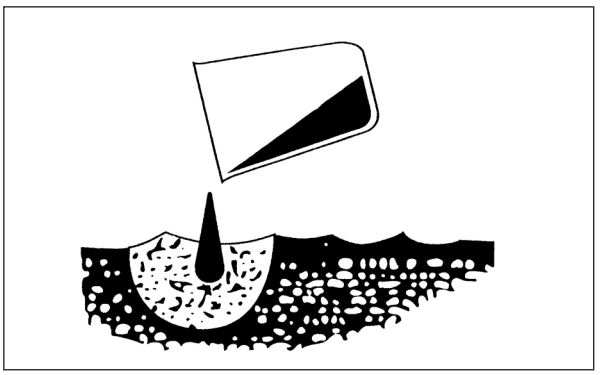

Use clean oil

[1] Use clean oil and grease to avoid introducing dirt.
- Use clean oil and grease.
- Also use clean containers.

[2] After filling grease, wipe any spilled grease or oil.
- Wipe extra grease on operating/rotating parts.

Keep lubricants at proper levels

- Lubricant levels that are either too high or too low are bad for proper machine operation. When checking and adding oil, maintain the proper levels.

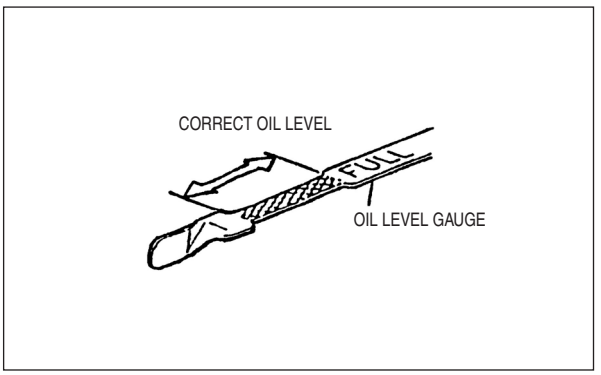

https://truckmanualshub.com/

Welding and repairing

- Turn off the power supply. (Move the starter switch to the OFF position).
- If an electronic part (microcomputer) is attached, remove it (electronic components such as controllers).
- Set up a ground within 1 m from the area to be welded.
- Do not apply 200 V or more continuously.
- Do not put any seals or bearings between welded area and the ground.
- When welding or heating a painted area, remove the paint first. When heat is applied to a painted area, harmful fumes will be produced.
- If heat is applied near to a section where hydraulic equipment and pipes are located, flammable fumes or vapors may be produced and ignited.

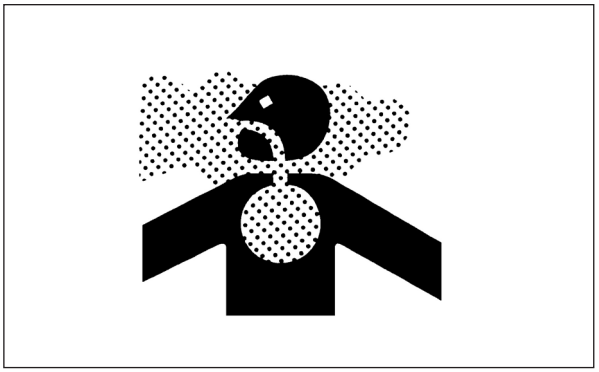

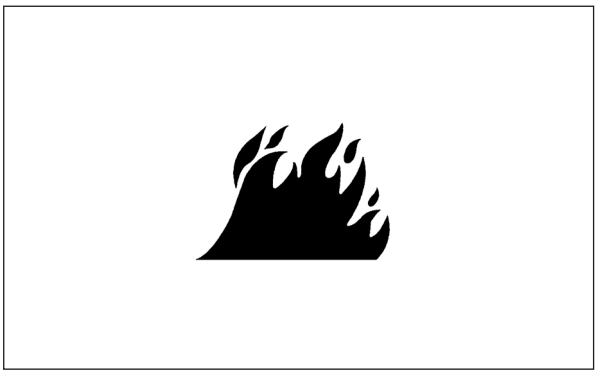

Do not drop tools and parts

- When opening inspection windows or tank filler ports for inspection, be careful not to drop bolts/nuts and tools into them.
- Take out everything from your pockets to avoid dropping things.

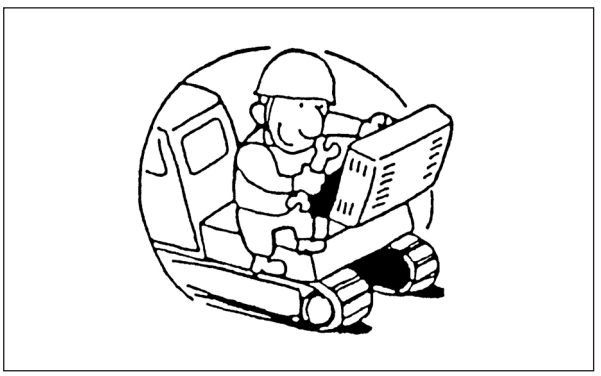

Installing O-rings

- When removing sealing parts containing O-rings, clean the fitting faces.
- Be careful not to damage O-rings and assemble them by applying oil when attaching them.

https://truckmanualshub.com/

After finishing maintenance work

When working together, decide on and use signals.

[1] After maintenance, make sure that at low idle there is no oil or water leakage from where the maintenance work was done (for approximately 5 minutes).
[2] Operate each component slowly, and make sure that they work correctly.
[3] Then, increase the engine revolutions and make sure there is no water or oil leakage.
[4] Operate each component and make sure that there are no abnormalities.

Inspection and maintenance during cold seasons

[1] Use fuel and lubricating oils and greases appropriate for the temperature conditions.
[2] Check the battery charging rates.
[3] Use anti-freeze (long-life coolant).
[4] Remove mud and water attached to the vehicle body. Wipe off water drops on the cylinder rods.

Inspection and maintenance when the machine is used under special situations

When used under extremely hot conditions

[1] Check/maintain cooling water and radiators.
[2] Check and adjust the fan belt tension.

When used in a rocky place

Pay special attention to breakage of the suspension, loose bolts and nuts, cracks, and wear. Loosen the tension of the shoes by a small amount.

When used by the ocean

Wash salt off especially carefully. Take special care of electronic equipment, hydraulic cylinders and suspension to prevent corrosion.

When used at sites full of dust and sand

[1] Check the elements of air cleaners more often, and clean or change the elements and dust cups regardless of replacement intervals.
[2] Tighten caps fully to prevent dust and sand from entering the hydraulic oil tank.

When used in marshes or on soft ground

Lubricate and grease the parts earlier than usual. Daily grease any pins which have been submerged in muddy water. In addition, check and clean the suspension.

https://truckmanualshub.com/

⚠ WARNING

Release the hydraulic pressure when you service or inspect the machine.

Release the hydraulic pressure prior to servicing or inspecting the machine.

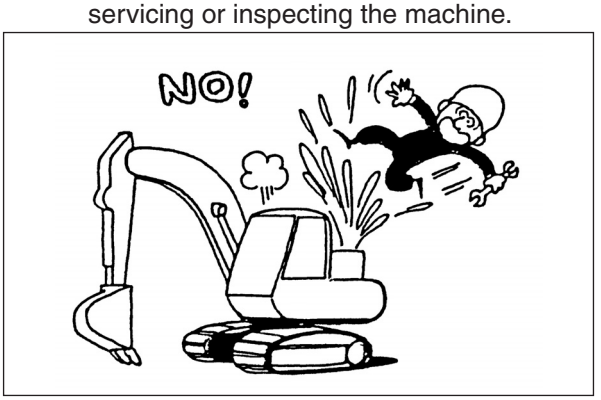

To release hydraulic pressure

[1] Lower the attachment to the ground.
[2] Turn the starter switch to the "OFF" position and stop the engine.
[3] Turn the starter switch to the "ON" position.
[4] Gate lock lever must be released (to the operating position).
[5] Move the right and left operational levers back and forth, and left to right, approximately ten times.
[6] Turn the starter switch to the "OFF" position.
[7] Release the pressure from the hydraulic oil tank. (To release pressure, push in the tip of breather rubber cap at the top of hydraulic oil tank.)

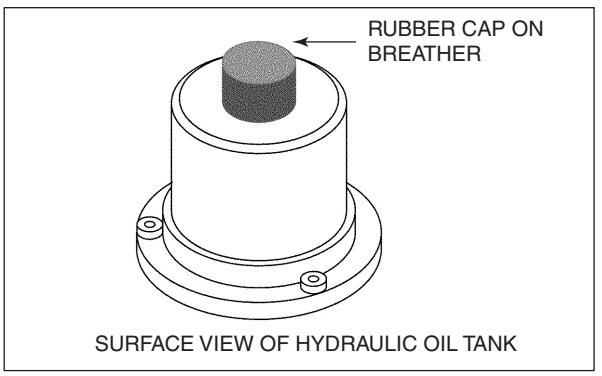

⚠ CAUTION

STOP THE ENGINE, PUSH THE PRESSURE RELEASE BUTTON. AND RELEASING AIR FROM THE TANK COMPLETELY.
BE CAUTIONS NOT TO GET BURNED BY HYDRAULIC OIL OF HIGH TEMPERATURE.

https://truckmanualshub.com/

General Preparation for Disassembly

1. Pre-Disassembly Preparation

(1) Cleaning before bringing machine into service shop

Remove mud and dirt completely before bringing the machine into the service shop. Carrying in mud and dirt into the service shop would decrease the cleaning efficiency during disassembly and increase the possibility of damage to the parts and contamination during reassembly.

(2) Pre-disassembly preliminary survey

Before disassembling, conduct a sufficient preliminary survey and keep records. This will save costs for unnecessary disassembly labor and parts. It will be also useful in giving advice to the user to prevent reoccurrence of the problem in the future.

- Machine type, number and service meter readings.
- Reasons for disassembly
  Check the symptoms, locations and causes of the problem and reinspect if necessary.
- Air cleaner contamination and air leakage.
- Characteristics of fuel used, contamination to fuel element, water contamination into the fuel and fuel leakage, deformed pipes.
- Oil level, oil contamination (viscosity, color and impurities), water in the oil, oil leakage, clogging of the oil filter element
- Check the criterion values.
- V-belt and track tension.
- Defective parts, loose connections.
- Check the conditions when turning on the engine.

(3) Disassembly preparation

In order to save unnecessary labor, reserve the facility and prepare tools, work place and parts shelf space according to the particular disassembly order and clean the place in advance.

2. Disassembling Precautions

(1) Detaching parts

- Check the mounting conditions, their front/back, left/right and up/down relations and removing procedures before starting disassembly.
- Verify matching marks indicating mounting relations. If necessary, impress a mark clearly to avoid errors during reassembly.
- Use special disassembly tools for specified parts.
- If a part does not come off even after removing bolts and nuts, do not force it, but check the part to see where any problems exist and remove such a cause before disassembling it.
- Each unit, especially similar parts, should be placed orderly and tagged or marked with markers if necessary.
- Standard parts such as bolts and nuts should be stored with attention paid to mounting locations and quantities.

(2) Checking and inspection during disassembly

- Because the important information for causes of the problem can be often found during disassembly, carefully observe seizure, interference or contacts of moving parts when proceeding with disassembly.
- Values such as end clearance, backlash or projection which will be used for later troubleshooting must be measured and recorded during disassembly.

(3) Disassembling clearance adjustment parts

Shims and washers used for clearance adjustment should be stored so that they can be reassembled in the identical conditions.

https://truckmanualshub.com/

(4) Disassembling linkage

The adjustment values of the rod should be kept as is whenever possible. If the adjustment value must be changed for disassembly, measure the length prior to disassembly and record it so that the same dimensions can be obtained at reassembly.

(5) Disassembling tapered and fitted sections

If a tapered or fitted section that should fit tightly comes off easily, inspect that part to find out the cause so that the same problem will not occur after reassembly.

(6) Disassembling bearings

- When removing bearings, use a jig as shown below rather than trying to remove them by force.

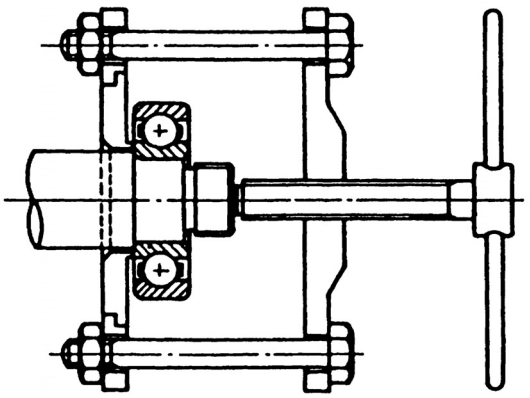

(7) Disconnecting hydraulic lines

- Lower the attachment to the ground and turn off the engine.
- Release the air bleeder cap of the hydraulic tank.
- Operate each control lever several times to release the pressure from the lines to be removed.
- To disconnect a tube from another tube or a tube from a hose, grip the male end with a wrench and loosen the female nut end.
- Seal the removed tube or hose ends as well as the oil ports of each removed hydraulic component with a bull plug to prevent foreign substances from entering. Seal the oil ports of the tank with a plastic bag or its equivalent.
- Since hydraulic oil remains inside the tube or hose removed, drain oil into an appropriate container. If a large amount of hydraulic oil was spilled in the working area, spread absorbent materials such as sawdust over the spill.

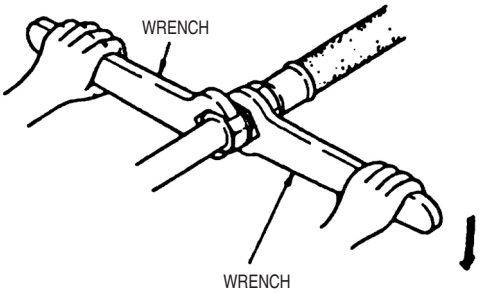

- When removing the lines from the underneath of the chassis, be careful not to spill oil on yourself.
- Attach a tag with appropriate symbols or location for installation to each tube, hose and connecting location of hydraulic component lines for easy reinstallation.

(8) Safety Work

- Keep the disassembly area tidy and clean.
- When loosening bolts or nuts, use the correct-size wrench and pull it back toward yourself. Using the wrong size wrench or loosening by pushing away from the body may cause the wrench or hands to slip leading to accident or injury.
- When working with two or more people, be sure to confirm signs to be used for safety before starting work.

https://truckmanualshub.com/

3. After Disassembly

(1) Cleaning

- Clean the disassembled parts and arrange them by each component. Be especially careful to remove sludge or dust completely from the oil holes for each part and inside the pipes.
- Divide the solvent into two containers, one for removing dirt and one for finishing for efficient cleaning. When cleaning critical parts, divide the tubs further to avoid using dirty solvent.
- When cleaning bearings or other high precision parts, use kerosene or neutral absolute light oil.
- When cleaning large castings such as the cylinder head or block in a container, clean them in solvent of pH 10 to 12 at 50 to 70 ℃ for 5 to 10 minutes and rinse thoroughly afterwards.
- When using special chemicals as cleansing agents, understand the proper usage thoroughly and be careful not to get it in your eyes or on your skin. Properly dispose of the used solvents.

(2) Dust or rust prevention

- Cover the cleaned parts to prevent dust from entering. Use caps for ends of hoses and tubes.
- If it is assumed to take a long time before reassembling, use corrosion inhibitor.

General Cautions for Assembly

1. Precautions for Assembly

(1) Installing parts

- Prior to work, clean all parts and repair any damage. Dirt and dust have adverse effects on moving parts and can shorten the machine's life. Therefore, try to prevent them from entering as much as possible.
- A new part coated with corrosion inhibitor must have the coating removed before reassembly. Cleaning solvent: light oil, trichlene
- Parts with matching marks must be assembled with those marks aligned correctly.
- Use a press and proper tools for installing bearings, bushings, oil seals and other similar parts. Use special tools for assembling special parts as specified.
- Coat the surface of press-fit parts with molybdenum disulfide grease.

(2) Tightening bolts and nuts

- Tighten bolts and nuts right to left and up and down alternatively so that tightening force is applied evenly.
- For bolts on essential areas, apply engine oil to the threaded portion so that tightening force is applied evenly without unnecessary engagement on the thread.
- For bolts and nuts in the areas that are difficult to check from outside, or for bolts and nuts in important areas, secure them using wires, cotter pins or folding washers.
- Clean bolts to which Loctite has been applied (identified as bolts with white substances when removed) with light oil or Tri hlene and dry them. After that, apply two or three drops of Loctite to the threaded portion of the bolts and fasten them.

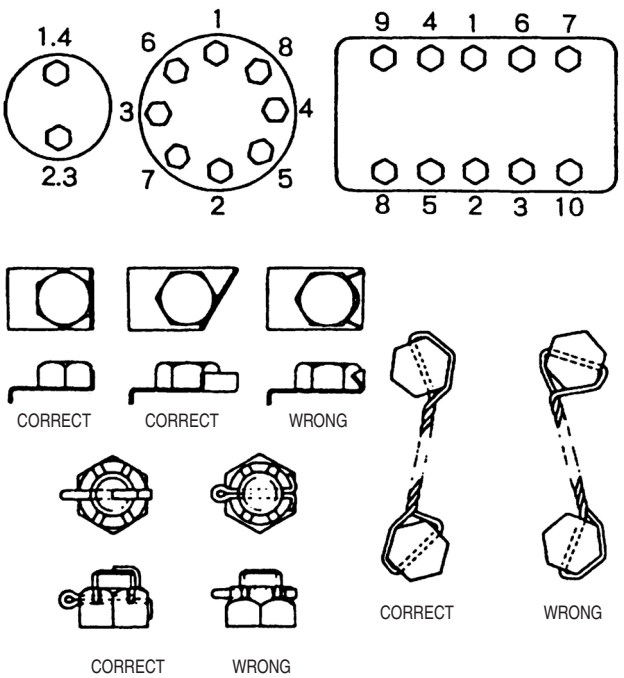

https://truckmanualshub.com/

(3) Installing hydraulic lines

- Clean every tube with cleaning solvents (e.g. light oil, kerosene, trichlene) and blow dry with compressed air.
- Do not use liquid packing (ThreeBond).
- When installing high-pressure hoses, do not allow them any torsion. In addition, do not allow any other parts to interfere with the hoses that have no protective spring.
- Install them correctly, checking tags that have been attached during disassembly to each tube, hose or connecting section of hydraulic components.
- When connecting the lines, if a nut on one end alone is tightened fully, the other end may not be able to be accessed. Therefore, first finger tighten nuts on both ends and tighten them fully with even torque alternately.
- After completing connecting lines, run the engine at low speed and move each hydraulic component using control levers from the operator's seat to inspect and replenish oil in the hydraulic tank. If it is necessary to bleed air from the tank, loosen the air bleeding plug.

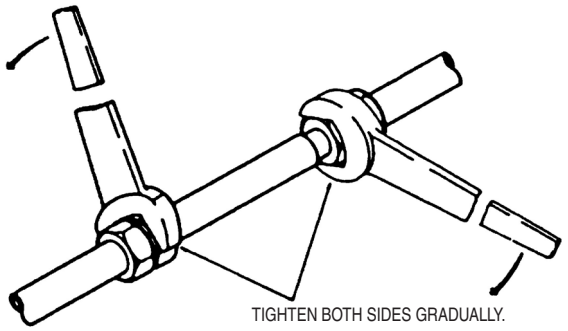

(4) Inspection during assembly

Points such as end clearance, end plate, projection, joggling and backlash, which cannot be checked unless in the reassembly process, should be checked or measured before proceeding to the next step. Keep records for the important areas.

(5) Assembling in clearance adjustment sections

- The shims and washers used in clearance adjustment sections should be reassembled to the identical locations from which they were removed unless they were worn or damaged.
- Confirm the adjustment value after reassembly.

(6) Reassembling linkage

If no abnormality is found on linkages, assemble them with the rod adjustment value identical to that of pre-assembly.

(7) Assembling tapered and fitted sections

- Repair and clean damaged areas before reassembling.
- If an area which should fit tightly goes in too easily, recheck the fit-in dimensions and correct any defect before reassembling.

(8) Safety Work

- Keep the assembly area, tools, and hands tidy and clean.
- When tightening bolts or nuts, use the correct-size wrench and pull it back toward yourself to tighten. Using the wrong size wrench or tightening by pushing away from the body may cause the wrench or hand to slip leading to accidents or injuries.
- When working with two or more people, be sure to confirm signs to be used for safety before starting work.

https://truckmanualshub.com/

2. Handling common parts

[1] Handling packing

- Replace packing, gasket, copper gaskets or other fluid sealing parts with new ones as a general procedure.
- Coat the gasket for particular areas with liquid gasket.

Cautions when applying liquid gasket

- Leather packing should be assembled after being immersed in oil.

[2] O-rings

- If an O-ring has become hardened after a long storage, discard it even if it is unused.
- Use only O-rings specified in the parts description list. Especially for the lubricated areas in the engine, O-rings made of special materials like silicon rubber are used to improve heat resistance and prevent early deterioration. Use only genuine parts.
- Periphery of an O-ring is marked with either blue or green dots for identification purposes described below.
- Remove scratches, contaminants, paints, oil or old liquid gasket completely from the surfaces to which liquid gasket will be applied.
- Apply specified liquid gasket on the application surface evenly and dry the surface for a few minutes.
- When the surface becomes dry to the touch, attach the gasket.

Color	Class	Symbol	Hardness	Usage	Type of rubber
Blue 1 dot	JIS B 2401 1A	1A	70 ± 5	Mineral oil resistant and for low pressure	NBR
Blue 2 dots	JIS B 2401 1B	1B	90 ± 5	Mineral oil resistant and for high pressure	NBR
Red 1 dot	JIS B 2401 2	2	70 ± 5	Gasoline resistant	NBR
Yellow 1 dot	JIS B 2401 3	3	70 ± 5	Vegetable oil resistant	CR
No dot	JIS B 2401 4C	4C	70 ± 5	Heat and cold weather resistant	Silicon rubber
Green 1 dot	JIS B 2401 4D	4D	70 ± 5	Heat and oil resistant	Fluorine rubber

- Coat O-rings with oil before installing to avoid causing flaws.
  Pay special attention to silicon rubber, which is easily torn apart.

[3] Handling oil seals

- Pay attention to the direction of oil seal lips.
- Be careful not to contaminate oil seals and make sure there is no rust or flaws (especially on lip surfaces).

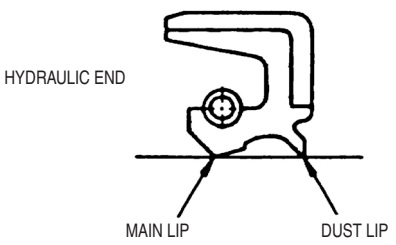

https://truckmanualshub.com/

- When assembling oil seals, apply grease following procedures below in order to prevent dry friction for initial stage of operations.

  Single lip type oil seal

  Apply to entire periphery on the opposite side of lip's seal end uniformly with finger to the extent that it does not build up.

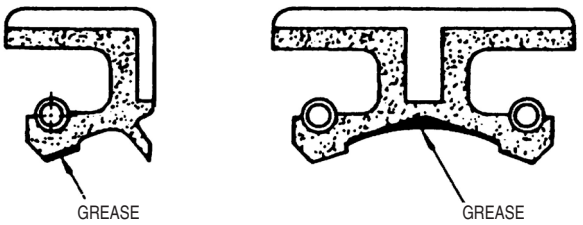

  Double lip type oil seal

  Apply to 40 to 60 % of the entire periphery of lip's space with finger.

- Make sure that there is neither dust, flaw, nor rust on the contact surface (shaft area) of the oil seal and apply grease or oil for smooth installation.
- For checking a flaw on the lip surface, lightly sweep with a wire. If it catches, replace the oil seal.
- Install using a guide and jig as shown below to avoid damaging the oil seal lip.
- After the oil seal is pressed in, there should be no inclination.
  Inclination allowance: ≦ 0.2 mm / dia. 100 mm.
- When applying adhesive to the oil seal periphery, take care that it does not adhere to the lip surface. Use clean guides and jigs since adhesive on the jig could easily be transferred to the lip.

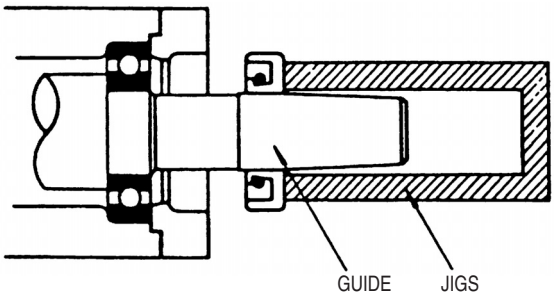

[4] Handling bearings

Due to the extremely high precision of bearing, the following precautions should be observed.

1) Since dust adversely affects bearing wear, dust prevention measures should be carried out sufficiently during disassembly and reassembly. Do not unpack a bearing package until immediately before installation.
2) Avoid rough handling or shock on bearings. Do not allow a bearing to spin to the extent that it makes noise while cleaning with compressed air.

Cautions during bearing installation

1) Do not hit on neither the inner nor outer ring during bearing installation which causes indentation on the rolling surfaces.
2) If interference is required on the inner ring, press in with a jig as shown in the figure.
   Bearing with large interference should be heat-treated. When using a heater, do not raise temperature to more than 120 ℃ because that would decrease heat-treated hardness.
3) Non-separating bearing which requires interference on both inner and outer rings should be pressed in with a jig as shown in the figure.

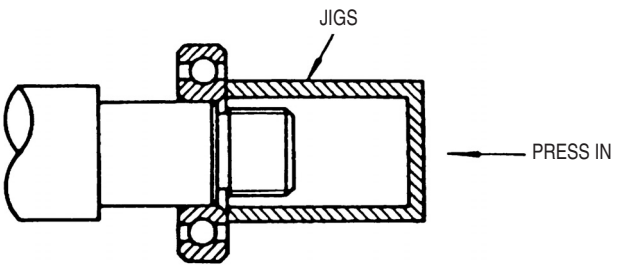

[5] Handling snap ring

- When installing or removing a snap ring, use a snap ring pliers with special attention not to widen excessively.
- Make sure that it is completely fitted in the grooves after installation.

https://truckmanualshub.com/

General Cautions When Performing Inspections

1. Cautions for inspections

[1] Inspection after maintenance
When working together, decide upon and use signals.

1) After the maintenance, run the engine at low idling (for approximately 5 minutes) and make sure that no oil or water leakage is detected from locations where maintenance work was done.
2) Operate each component slowly and make sure that they work properly.
3) Increase the engine speed and make sure there is no water and oil leakage.
4) Operate each component and make sure that there are no abnormalities.
5) Operate the monitor and other electric parts to check that they function properly.

https://truckmanualshub.com/

Tightening Torque

Tightening Bolts and Nuts

- Tighten bolts and nuts right to left and up and down alternately so that tightening force is applied evenly.

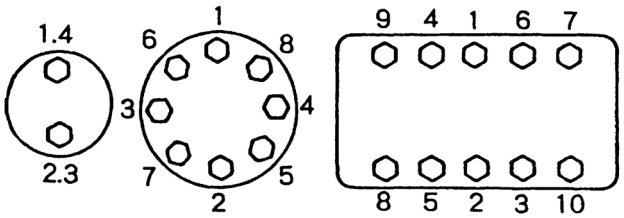

- For bolts on important areas, apply engine oil on the threaded portion so that tightening force is applied evenly without unnecessary engagement on the thread.
- For bolts and nuts in the areas that it is difficult to check from outside or bolts and nuts in important areas, secure them using wires, cotter pins or folding washers.

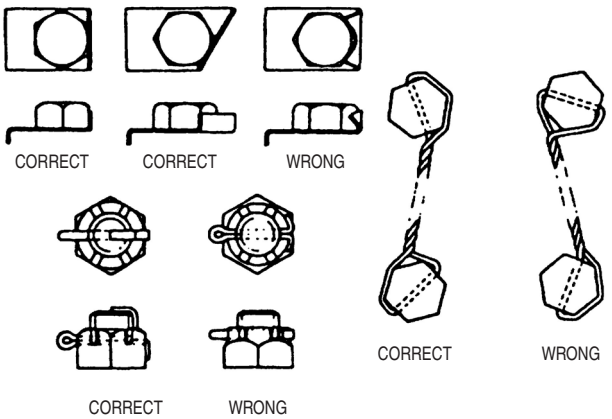

- Clean bolts to which Loctite was applied (identified as bolts with white substances when removed) with light oil and trichlene, and dry them. After that, apply two or three drops of Loctite to the threaded portion of the bolts and fasten them.

Retightening Torque Table

The tightening torque for the bolts and nuts not indicated in the manual is as follows:

Bolt Diameter (size)			M6	M8	M10	M12	M14	M16	M18	M20
Hexagon Bolt	Wrench	(mm)	10	13	17	19	22	24	27	30
	Tightening Torque	(kgf・m)	0.7	2.0	4.0	6.0	10.0	16.0	20.0	30.0
		(N・m)	6.9	19.6	39.2	58.8	98.1	156.9	196.1	294.2
Hexagon Socket Head Bolt	Wrench	(mm)	5	6	8	10	12	14	14	17
	Tightening Torque	(kgf・m)	0.9	2.2	4.3	8.0	12.0	18.0	25.0	35.0
		(N・m)	8.8	21.6	42.1	78.5	117.7	176.5	245.2	343.2

https://truckmanualshub.com/

Numerical Conversion Table

This section describes unit notation for numerical values.

[1] About the SI unit system
Due to the amendment of the weights and measurements system in 1993, the gravitational system of units (old unit system) has been replaced with the SI unit system (new unit system).
In compliance with this amendment, our technical documents use the SI unit system for numerical values.
Be very careful when measuring hydraulic pressure and other values.

[2] Differences between the gravitational system of units and the SI unit system
An overview of each unit system is described below.
Refer to JIS Z 8202 and JIS Z 8203 for specific details.

1) What is the gravitational system of units (old unit system)?
The gravitational system of units is a unit system that uses the meter (m) as the base unit for length and the second (s) as the base unit for time, and as the base unit of force, 1 kilogram of force (kgf) is defined as the force of gravity (= mass x gravitational acceleration) acting on an object with a mass of 1 kilogram-weight (kgw).

2) What is SI unit system (new unit system)?
The SI unit system uses the meter (m) as the base unit for length and the second (s) as the base unit for time, and as the base unit of force, 1 Newton (N) is defined to be the force that exerts gravitational acceleration on a mass of 1 kgw at the rate of one meter per second squared (m/s^2).

	Units Conversion Factor	
Gravitational unit	← x → ← ÷ →	SI unit
kgf	9.807	N
lbf	4.448	N
kgf・cm	0.0981	N・m
lbf・ft	1.356	N・m
lbf・in	0.113	N・m
kgf/cm^2	0.0981	MPa
atm	0.1013	MPa
lbf/in^2	0.0069	MPa
mm Hg	133.3	Pa
in Hg	3386	Pa
kgf・m/s	0.00981	kW
lbf・ft/s	0.00136	kW
PS	0.7355	kW
HP	0.746	kW
kgf・m	9.807	J
kcal	4186	J
$kgf・s/cm^2$	98067	Pa・s
cP	0.001	Pa・s
P	0.1	Pa・s
cSt	1×10^{-6}	m^2/s
St	0.0001	m^2/s

https://truckmanualshub.com/

Numerical Conversion Table

Torque **kgf · m → N · m**

kgf · m	0	1	2	3	4	5	6	7	8	9	kgf · m
	N · m	N · m	N · m	N · m	N · m	N · m	N · m	N · m	N · m	N · m	
—	—	9.81	19.61	29.42	39.23	49.03	58.84	68.65	78.45	88.26	—
10	98.07	107.87	117.68	127.49	137.29	147.10	156.91	166.71	176.52	186.33	10
20	196.13	205.94	215.75	225.55	235.36	245.17	254.97	264.78	274.59	284.39	20
30	294.20	304.01	313.81	323.62	333.43	343.23	353.04	362.85	372.65	382.46	30
40	392.27	402.07	411.88	421.69	431.49	441.30	451.11	460.91	470.72	480.53	40
50	490.33	500.14	509.95	519.75	529.56	539.37	549.17	558.98	568.79	578.59	50
60	588.40	598.21	608.01	617.82	627.63	637.43	647.24	657.05	666.85	676.66	60
70	686.47	696.27	706.08	715.89	725.69	735.50	745.31	755.11	764.92	774.73	70
80	784.53	794.34	804.15	813.95	823.76	833.57	843.37	853.18	862.99	872.79	80
90	882.60	892.41	902.21	912.02	921.83	931.63	941.44	951.25	961.05	970.86	90
100	980.67	990.47	1000.28	1010.08	1019.89	1029.70	1039.50	1049.31	1059.12	1068.92	100

Torque **N · m → kgf · m**

N · m	0	10	20	30	40	50	60	70	80	90	N · m
	kgf · m	kgf · m	kgf · m	kgf · m	kgf · m	kgf · m	kgf · m	kgf · m	kgf · m	kgf · m	
—	—	1.020	2.039	3.059	4.079	5.099	6.118	7.138	8.158	9.177	—
100	10.197	11.217	12.237	13.256	14.276	15.296	16.315	17.335	18.355	19.375	100
200	20.394	21.414	22.434	23.453	24.473	25.493	26.513	27.532	28.552	29.572	200
300	30.591	31.611	32.631	33.651	34.670	35.690	36.710	37.729	38.749	39.769	300
400	40.789	41.808	42.828	43.848	44.868	45.887	46.907	47.927	48.946	49.966	400
500	50.986	52.006	53.025	54.045	55.065	56.084	57.104	58.124	59.144	60.163	500
600	61.183	62.203	63.222	64.242	65.262	66.282	67.301	68.321	69.341	70.360	600
700	71.380	72.400	73.420	74.439	75.459	76.479	77.498	78.518	79.538	80.558	700
800	81.577	82.597	83.617	84.636	85.656	86.676	87.696	88.715	89.735	90.755	800
900	91.774	92.794	93.814	94.834	95.853	96.873	97.893	98.912	99.932	100.952	900
1000	101.972	102.991	104.011	105.031	106.050	107.070	108.090	109.110	110.129	111.149	1000

Pressure **kgf/cm^2 → kPa (1 kPa = 1/1000 MPa)**

kgf/cm^2	0	1	2	3	4	5	6	7	8	9	kgf/cm^2
	kPa	kPa	kPa	kPa	kPa	kPa	kPa	kPa	kPa	kPa	
—	—	98.1	196.1	294.2	392.3	490.3	588.4	686.5	784.5	882.6	—
10	980.7	1078.7	1176.8	1274.9	1372.9	1471.0	1569.1	1667.1	1765.2	1863.3	10
20	1961.3	2059.4	2157.5	2255.5	2353.6	2451.7	2549.7	2647.8	2745.9	2843.9	20
30	2942.0	3040.1	3138.1	3236.2	3334.3	3432.3	3530.4	3628.5	3726.5	3824.6	30
40	3922.7	4020.7	4118.8	4216.9	4314.9	4413.0	4511.1	4609.1	4707.2	4805.3	40
50	4903.3	5001.4	5099.5	5197.5	5295.6	5393.7	5491.7	5589.8	5687.9	5785.9	50
60	5884.0	5982.1	6080.1	6178.2	6276.3	6374.3	6472.4	6570.5	6668.5	6766.6	60
70	6864.7	6962.7	7060.8	7158.9	7256.9	7355.0	7453.1	7551.1	7649.2	7747.3	70
80	7845.3	7943.4	8041.5	8139.5	8237.6	8335.7	8433.7	8531.8	8629.9	8727.9	80
90	8826.0	8924.1	9022.1	9120.2	9218.3	9316.3	9414.4	9512.5	9610.5	9708.6	90
100	9806.7	9904.7	10002.8	10100.8	10198.9	10297.0	10395.0	10493.1	10591.2	10689.2	100

https://truckmanualshub.com/

Numerical Conversion Table

Pressure **kPa → kgf/cm^2 (1 kPa = 1/1000 MPa)**

kPa	0	100	200	300	400	500	600	700	800	900	kPa
	kgf/cm^2	kgf/cm^2	kgf/cm^2	kgf/cm^2	kgf/cm^2	kgf/cm^2	kgf/cm^2	kgf/cm^2	kgf/cm^2	kgf/cm^2	
—	—	1.020	2.039	3.059	4.079	5.099	6.118	7.138	8.158	9.177	—
1000	10.197	11.217	12.237	13.256	14.276	15.296	16.315	17.335	18.355	19.375	1000
2000	20.394	21.414	22.434	23.453	24.473	25.493	26.513	27.532	28.552	29.572	2000
3000	30.591	31.611	32.631	33.651	34.670	35.690	36.710	37.729	38.749	39.769	3000
4000	40.789	41.808	42.828	43.848	44.868	45.887	46.907	47.927	48.946	49.966	4000
5000	50.986	52.006	53.025	54.045	55.065	56.084	57.104	58.124	59.144	60.163	5000
6000	61.183	62.203	63.222	64.242	65.262	66.282	67.301	68.321	69.341	70.360	6000
7000	71.380	72.400	73.420	74.439	75.459	76.479	77.498	78.518	79.538	80.558	7000
8000	81.577	82.597	83.617	84.636	85.656	86.676	87.696	88.715	89.735	90.755	8000
9000	91.774	92.794	93.814	94.834	95.853	96.873	97.893	98.912	99.932	100.952	9000
10000	101.972	102.991	104.011	105.031	106.050	107.070	108.090	109.110	110.129	111.149	10000

https://truckmanualshub.com/

Equipment Configuration

Overall

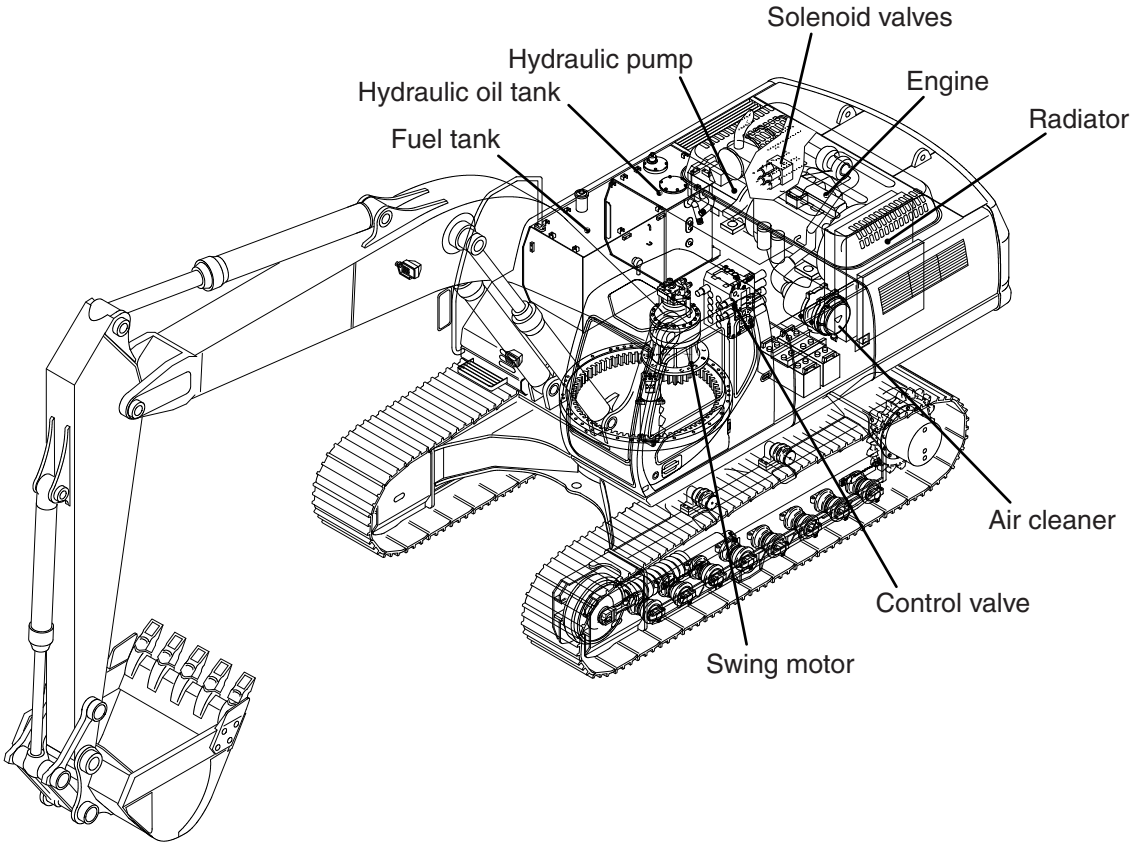

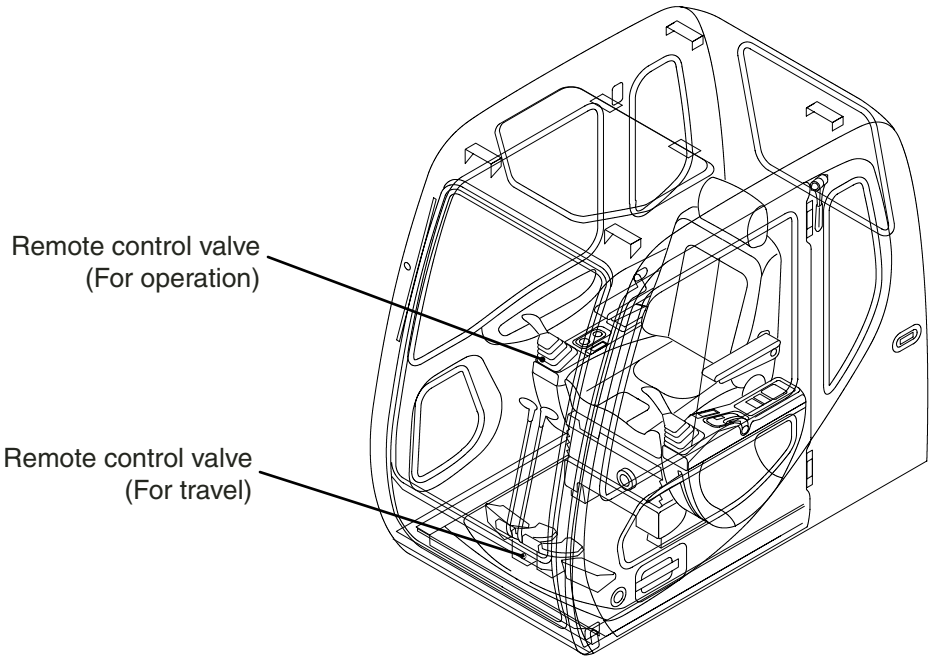

https://truckmanualshub.com/

Operator's Cab

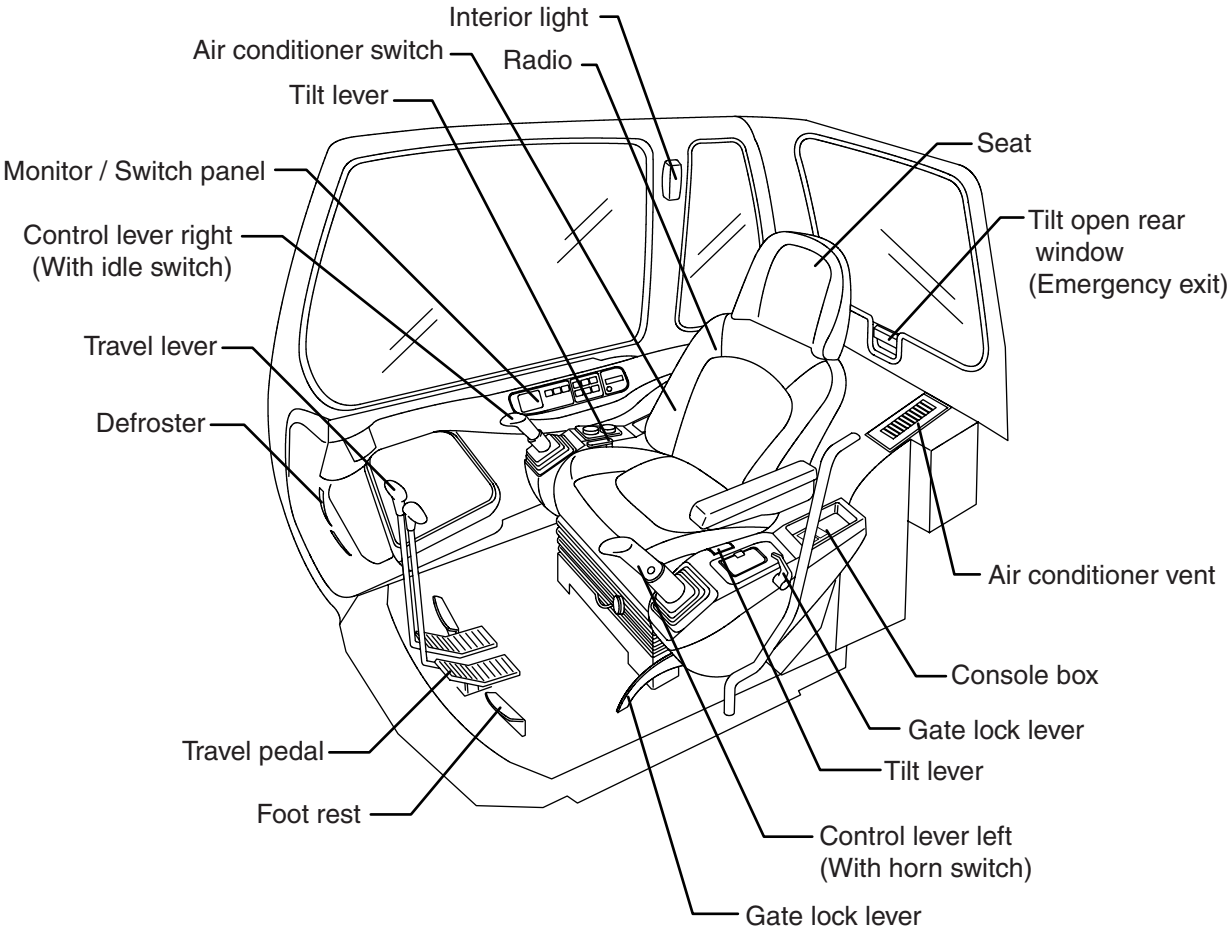

https://truckmanualshub.com/

Lower Mechanism
Assembly Drawing SH330-3B / SH350HD-3B

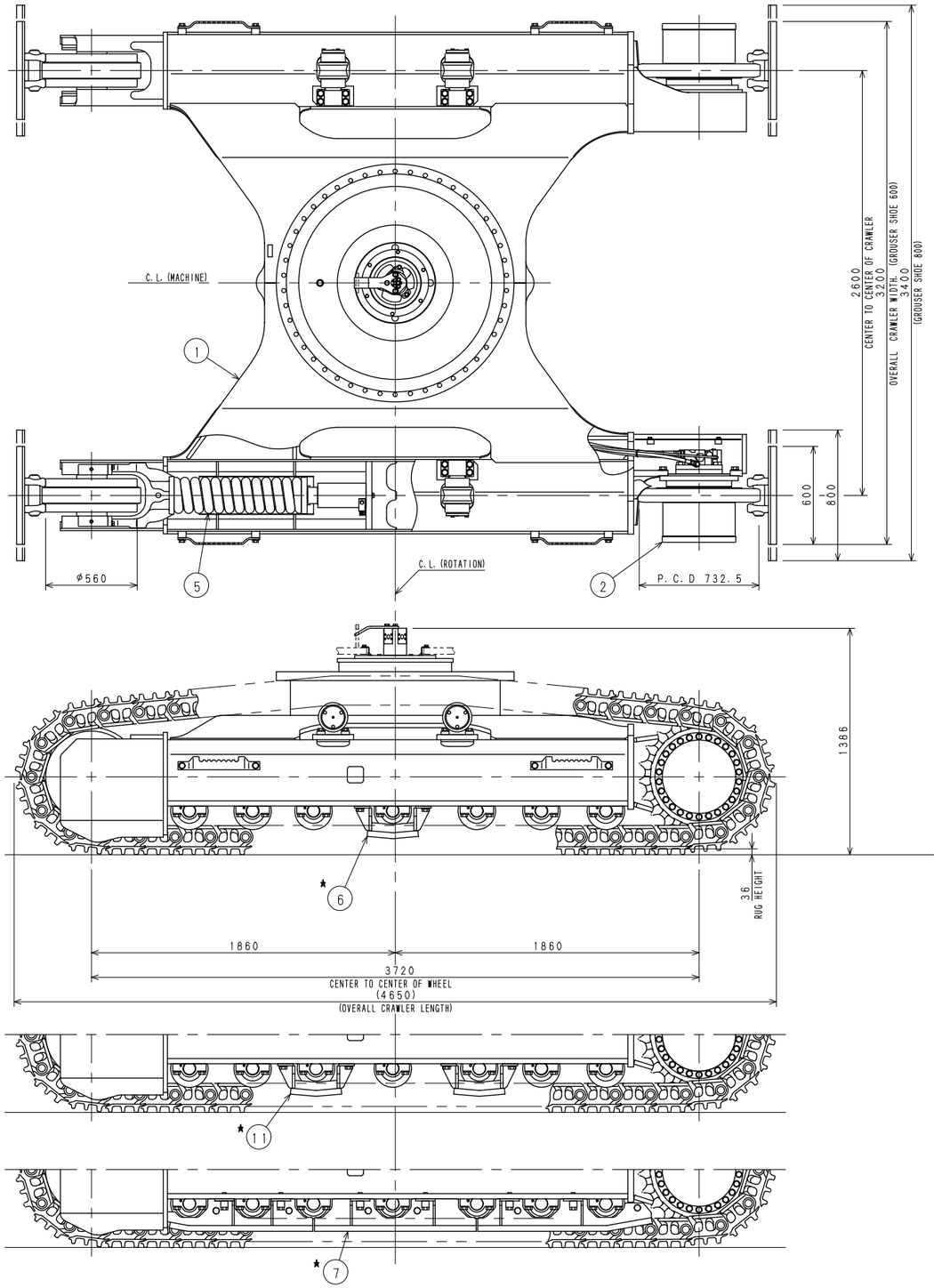

NOTES

1) REFER TO THE RIGHT TABLE FOR SHOE CHOICE. (AT MARK '※')
2) REFER TO THE RIGHT TABLE FOR TRACK GUARD CHOICE. (AT MARK '★')

MODEL	DESTI-NATION	GROUSER SHOE 600	GROUSER SHOE 800
SH330-3B	JAPAN EXP.	STANDARD	OPTION
SH350HD-3B	JAPAN EXP. TURK. CHINA	STANDARD	OPTION

MODEL	DESTI-NATION	TRACK GUARD (SINGLE)	TRACK GUARD (FULL)	TRACK GUARD (DOUBLE)
SH330-3B	JAPAN	STANDARD	OPTION	
	EXP.	STANDARD		
SH350HD-3B	JAPAN		STANDARD	
	EXP. TURK. CHINA		OPTION	STANDARD

	PART NAME	SYM	QTY
	LOWER FRAME ASSY	1	1
	TRACTION EQUIPMENT ASSY	2	2
	TRACTION MOTOR LINE ASSY	3	1
	CENTER JOINT ASSY	4	1
	RECOIL SPRING & ROLLER ASSY	5	2
★	TRACK GUARD ASSY	6	2
★	TRACK GUARD (FULL) ASSY	7	2
	LOWER UNDER COVER ASSY	8	1
※	GROUSER SHOE 600	9	2
※	GROUSER SHOE 800	10	2
★	TRACK GUARD (DOUBLE) ASSY	11	2

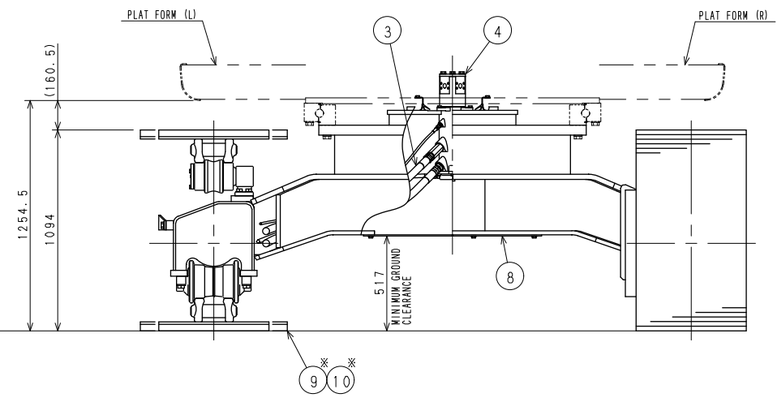

https://truckmanualshub.com/

Main Body

MAJOR EQUIPMENT SPECIFICATIONS

Second Edition : 05/2006

Assembly Drawing SH330LC-3B

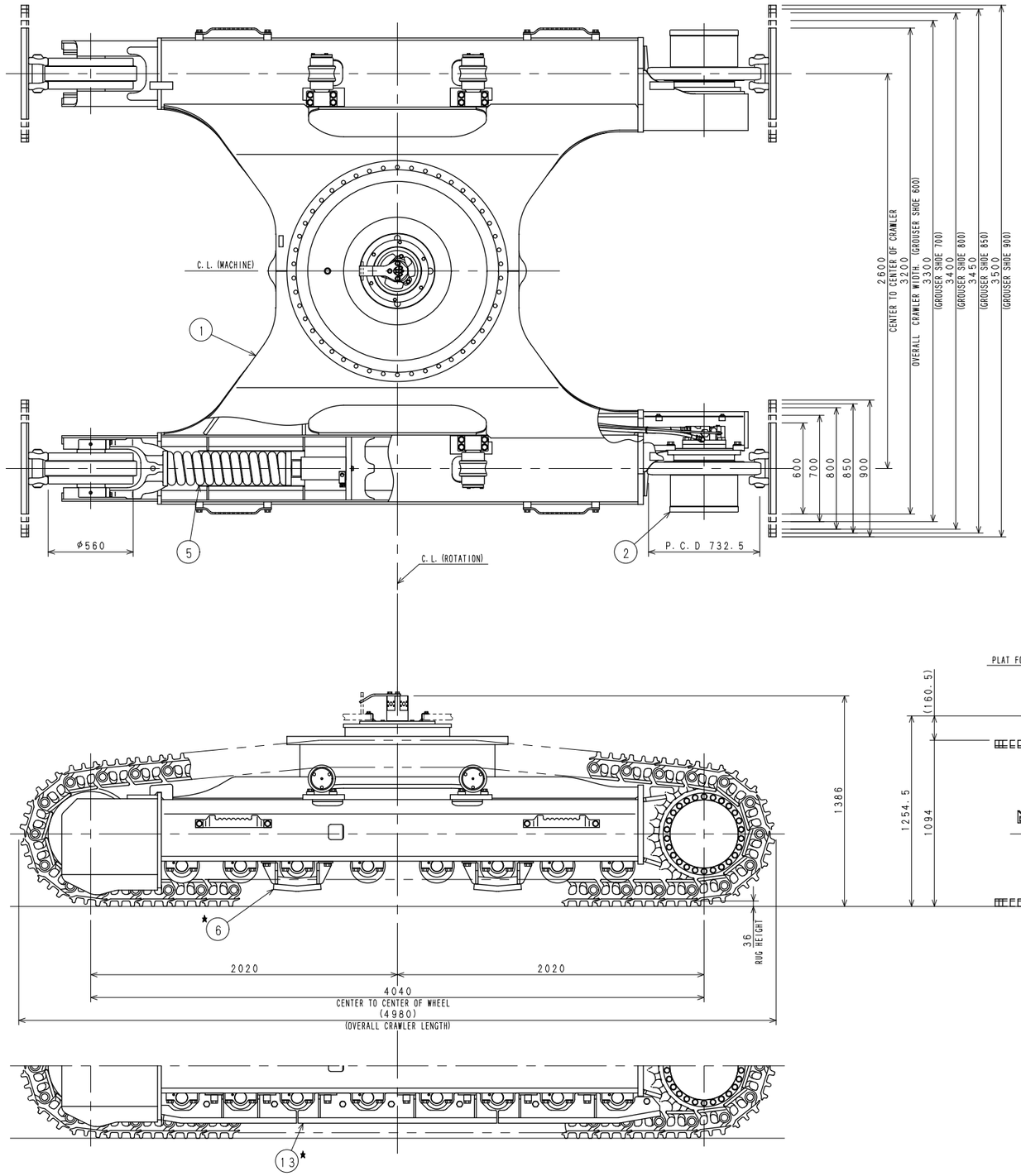

NOTES

1) REFER TO THE BELOW TABLE FOR SHOE CHOICE. (AT MARK '※')
2) REFER TO THE BELOW TABLE FOR TRACK GUARD CHOICE. (AT MARK '★')

MODEL	DESTI-NATION	GROUSER SHOE 600	GROUSER SHOE 700	GROUSER SHOE 800	GROUSER SHOE 850	GROUSER SHOE 900
SH330LC-3B (BH)	JAPAN EXP. TURK.	STANDARD		OPTION		
SH300LBCE-3B(BH)	EXP.	STANDARD	OPTION	OPTION		
SH300LBCE-3B(HD)	CASE-EU CHINA					
SH350LHD-3B (BH)	TURK.					
SH300LBCE-3B(BH)	LBX CASE-NA		OPTION	STANDARD	OPTION	
SH300LBCE-3B(BH)	CASE-EU	STANDARD	OPTION	OPTION	OPTION	OPTION

MODEL	DESTI-NATION	TRACK GUARD(DOUBLE)	TRACK GUARD(FULL)
SH330LC-3B (BH)	JAPAN EXP. TURK.	STANDARD	
SH300LBCE-3B(BH)	EXP. LBX CASE-EU CASE-NA		
SH300LBCE-3B(HD)	CHINA		
SH300LBCE-3B(HD)	CASE-EU		STANDARD
SH350LHD-3B (BH)	TURK.		

	PART NAME	SYM	QTY
	LOWER FRAME ASSY	1	1
	TRACTION EQUIPMENT ASSY	2	2
	TRACTION MOTOR LINE ASSY	3	1
	CENTER JOINT ASSY	4	1
	RECOIL SPRING & ROLLER ASSY	5	2
★	TRACK GUARD ASSY(DOUBLE)	6	2
	LOWER UNDER COVER ASSY	7	1
※	GROUSER SHOE 600	8	2
※	GROUSER SHOE 700	9	2
※	GROUSER SHOE 800	10	2
※	GROUSER SHOE 850	11	2
※	GROUSER SHOE 900	12	2
★	TRACK GUARD ASSY(FULL)	13	2

KSA10520-D01

https://truckmanualshub.com/

Travel Unit

Sumitomo Part No.	KSA10220
Traction motor	
Manufacturer	Nabtesco Corporation
Motor type	Variable displacement piston motor automatic 2-speed switch-over with parking brake
Displacement	290.7 / 170.1 cm^3/rev
Operating pressure	34.3 MPa
Operating flow	284.2 L/min
Brake torque	4738 N·m or over (with reduction gear)
Relief set pressure	35.8 to 37.8 MPa (at 5 L/min)
2-speed control pressure	26.5 MPa
Traction reduction gears	
Reduction gear type	Planetary gear 2-stage reduction system
Reduction ratio	40.467
Dry weight	399 kg

Take-up Roller

Sumitomo Part No.	KSA1307
Weight	165 kg

Upper-Roller

Sumitomo Part No.	KBA1141
Weight	43 kg

Lower-Roller

Sumitomo Part No.	KSA1068
Weight	60 kg

https://truckmanualshub.com/

Recoil Spring

Part Name	Sumitomo Part No.	
Yoke	KSA1065	39.8 kg
Sems bolt M16 x 50	105R016Y050R	0.5 kg
Threaded rod	KSA1066	50.3 kg
Castle nut M64	165R064HSN	1.9 kg
Spring pin 10 x 100	338W100Z100B	0.1 kg
Recoil spring	KSA1310	119.4 kg
Grease cylinder assembly	KSA0832	41.3 kg
Sems bolt M16 x 65	105R016Y065R	0.3 kg
Assembly	Total weight	254.0 kg
	Mounting length of spring:	779 mm

Shoes

Part Name	SH330-3B / SH350HD-3B		SH330LC-3B	
	Sumitomo Part No.		Sumitomo Part No.	
600 Grouser	KSA10370	2098 kg	KSA10450	2217 kg
Link	KSA10380	One set	KSA10460	One set
Shoe	KSA1121	45 pcs.	KSA1106	48 pcs.
Bolt	KSA1122	180 pcs.	KSA1107	192 pcs.
Nut	KSA1123	180 pcs.	KSA1108	192 pcs.

Part Name	SH330-3B / SH350HD-3B		SH330LC-3B	
	Sumitomo Part No.		Sumitomo Part No.	
800 Grouser	KSA10410	2455 kg	KSA10480	2619 kg
Link	KSA10420	One set	KSA10460	One set
Shoe	KSA1167	45 pcs.	KSA1167	48 pcs.
Bolt	KSA1107	180 pcs.	KSA1107	192 pcs.
Nut	KSA1108	180 pcs.	KSA1108	192 pcs.

https://truckmanualshub.com/

Upper Mechanism

Swing Unit

Swing moter	
Sumitomo Part No.	KSC0247
Manufacturer	TOSHIBA MACHINE CO., LTD
Motor type	Fixed displacement piston motor with parking brake and reversal prevention valve
Displacement	186.7 cm^3/rev
Operating pressure	29.4 MPa
Operating flow	284 L/min
Brake torque	961.6 N·m or over
Brake off pressure	2.9 MPa less than
Relief set pressure	29.3 MPa (at 100 L/min)
Swing reduction gears	
Sumitomo Part No.	KSC0252
Reduction gear type	Planetary gear 2-stage reduction system
Reduction ratio	27.143
Dry weight	435 kg

https://truckmanualshub.com/

Engine and Related Areas

Engine

Sumitomo Part No.	KSH1027
Engine model name	ISUZU 6HK1 Diesel Engine
Engine type	Water-cooled, 4-cycle diesel, 6-cylinder in line, direct injection (electric control), turbocharger with air cooled intercooler.
Number of cylinders - Bore x Stroke	6 - dia. 115 mm x 125 mm
Displacement	7.79 L
Compression ratio	17.5
Rated output	202 kW / 2000 min^{-1}
Maximum torque	1080 N·m / apprex. 1500 min^{-1}
Dry weight	Approximately 640 kg
Engine dimensions	L 1357 x W 995.4 x H 1141 mm
Oil pan	All direction 35°, inclinable
Cooling fan	Diameter 850 mm suction type-6blades resin & steel
Pulley ratio	0.80 (reduction)
Alternator	24 V 50 A AC type
Starter-generator	24 V 5 kW reduction type
Coolant capacity	14.5 L (engine only)
Oil pan capacity	Max. : 38 L Min. : 28 L (excluding oil filter)
Direction of rotation	Right (viewed from fan side) ; compliant with

Muffler

Sumitomo Part No.	KSH0948
Manufacturer	SANKEI GIKEN KOGYO CO., LTD
External dimensions	dia. 283.2 x 780 mm
Weight	20.0 kg

https://truckmanualshub.com/

Air Cleaner

Sumitomo Part No.	KSH0895
Manufacturer	Nippon Donaldson, Ltd
Element (outer)	KSH0933
Element (inner)	KSH0932
Weight	13.6 kg

Radiator

Sumitomo Part No.		KSH1028
Manufacturer		T. RAD Co., Ltd
Oil cooler	Weight	34.0 kg
	Oil capacity	16.0 L
Radiator	Weight	21.1 kg
	Water capacity	9.4 L
Air cooler	Weight	19.9 kg
	Capacity	—
Fuel cooler	Weight	1.2 kg
	Capacity	0.44 L
Total weight		137 kg

https://truckmanualshub.com/

Main Body

MAJOR EQUIPMENT SPECIFICATIONS

Fuel Tank

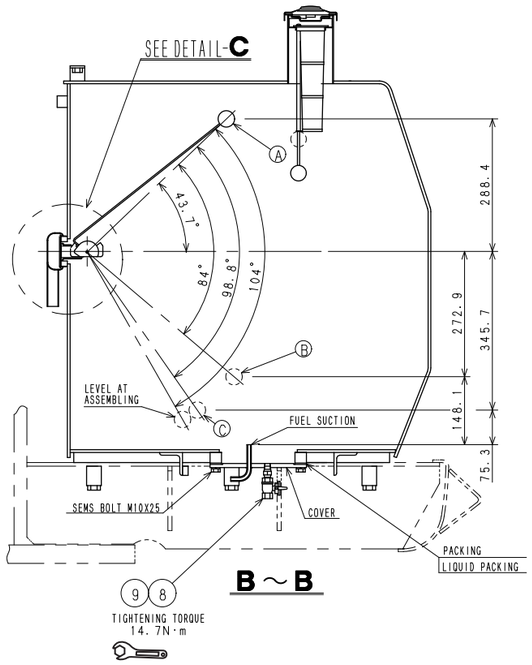

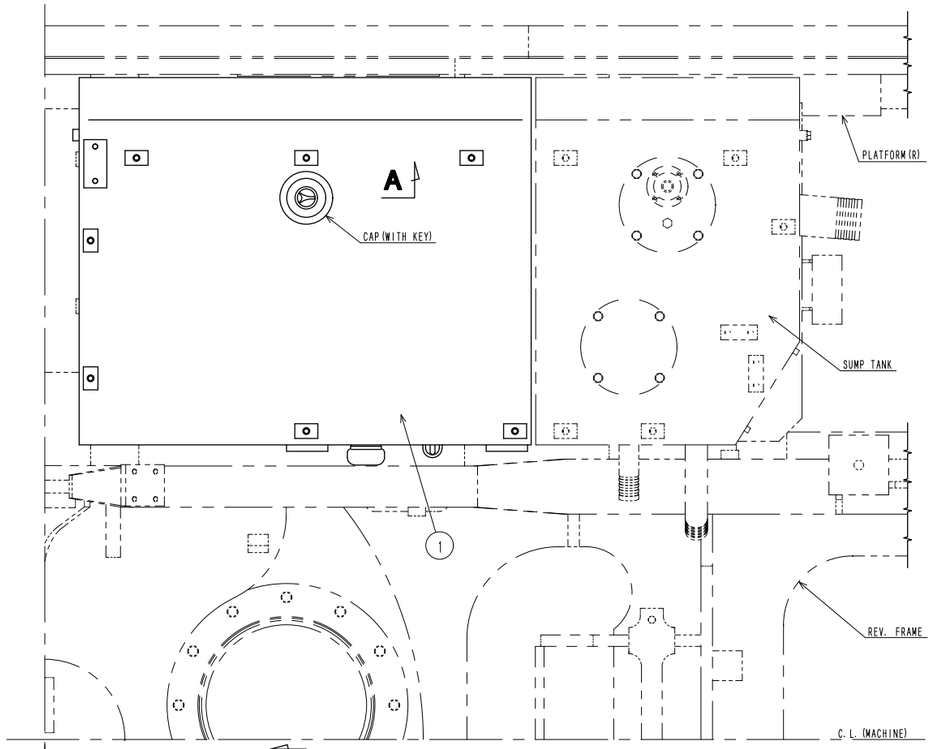

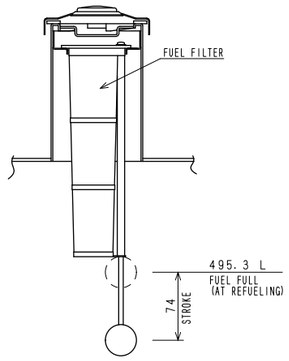

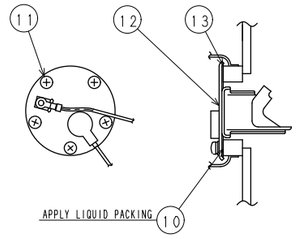

PART NAME	SYM	QTY
FUEL TANK	1	1
SENSOR COVER	2	1
PLATE SHIM (t=0.8)	3	NEED
PLATE SHIM (t=2.0)	4	NEED
HIGH STRENGTH BOLT M16X70	5	6
SPACER	6	6
LOCTITE 262	7	NEED
DRAIN COCK	8	1
NIPPLE	9	1
LIQUID PACKING	10	NEED
PAN HEAD SCREW M5X12	11	5
FUEL SENSOR	12	1
NON-ASBESTOS PACKING	13	1

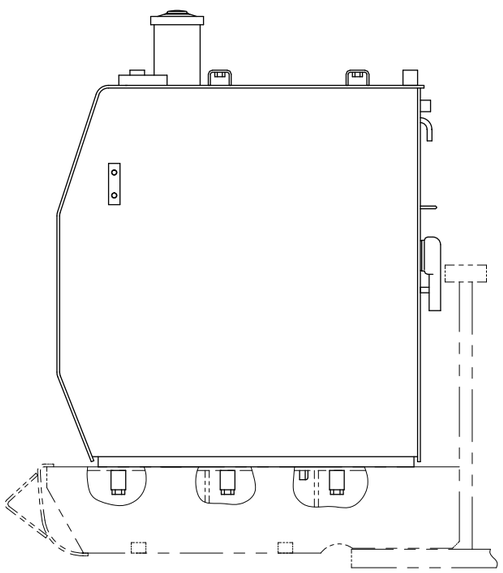

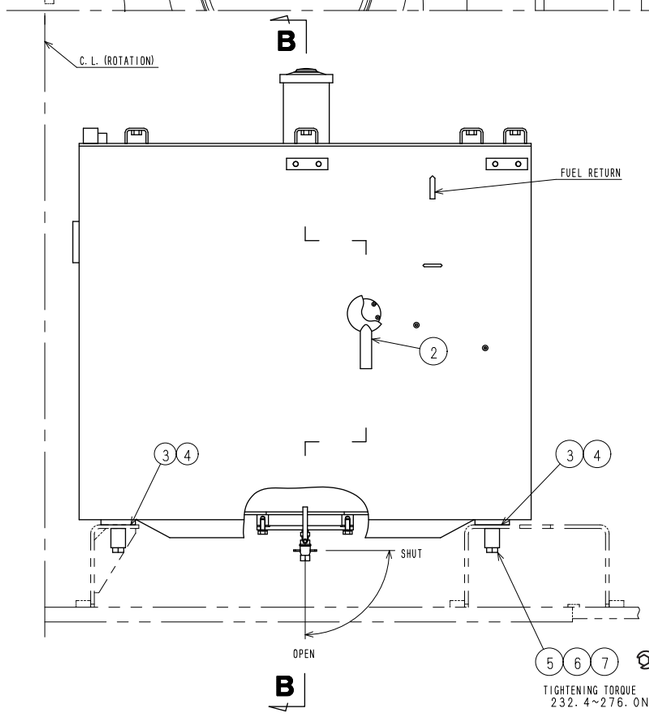

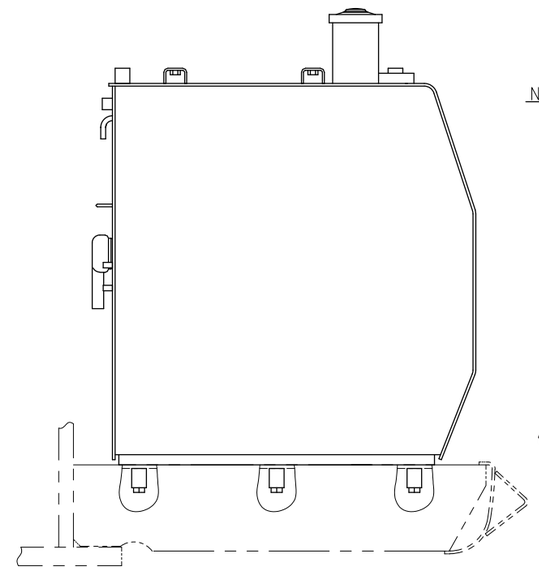

NOTES

1) CAPACITY OF THE FUEL TANK IS 578 L .

2) THE SCM MONITOR FUEL GAUGE IS SHOWN AS FOLLOWING DRAWING.

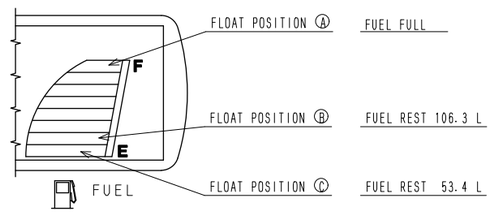

3) TIGHTEN BOLTS ⑤ TO THE INDICATED TORQUE AFTER APPLYING LOCTITE #262 TO THE THREAD.

KSH0904Z-D03

https://truckmanualshub.com/

Hydraulic System

Hydraulic Pump

Sumitomo Parts No.	KSJ2851
Manufacturer	Kawasaki Precision Machinery Ltd.
Main pump	
Pump type	Double variable displacement piston pump
Displacement	140 x 2 cm^3/rev
Rated operating pressure	34.3 MPa
Meximum operating pressure	37.3 MPa
Input revolution speed	2030 min^{-1}
Maximum flow	284 x 2 L/min (at 2030 min^{-1})
Input horsepower	171.7 kW
Shaft input horsepower	174.7 kW (at 2030 min^{-1})
Shaft input torque	821.8 N·m (at 2030 min^{-1})
Pilot pump	
Pump type	Gear pump
Displacement	15 cm^3/rev
Operating pressure	3.9 MPa
Maximum flow	30.5 L/min (at 2030 min^{-1})
Input horsepower	3.0 kW
Control characteristics	Simultaneous output control of overall
	Negative control
	Electric horse power control
Dry weight	130 kg

https://truckmanualshub.com/

Sump Tank

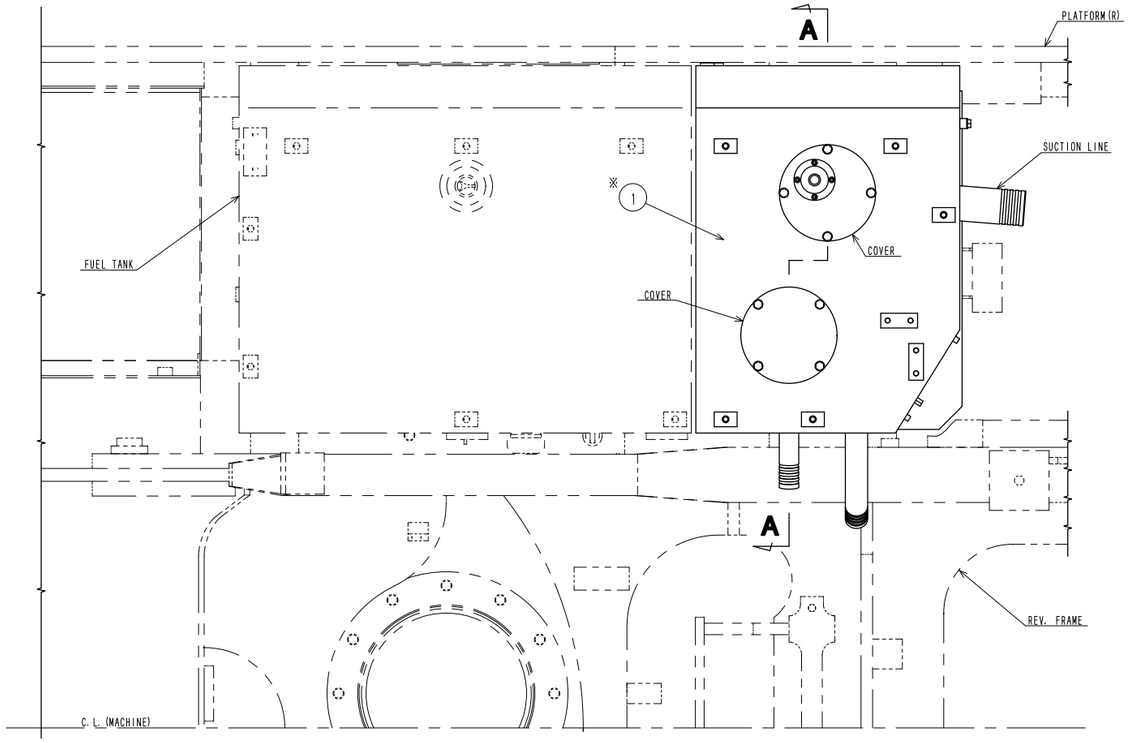

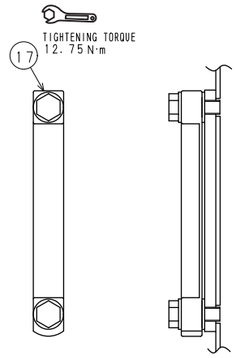

DETAIL-**B**

PART NAME	SYM	QTY
SUMP TANK	1	1
SEMS BOLT M10X25	2	8
AIR BREATHER	3	1
HEX SOCKET HEAD BOLT M6X16	4	4
SPRING WASHER 6	5	4
COMPRESSION SPRING	6	1
RELIEF VALVE	7	1
RETURN FILTER	8	1
STRAINER	9	1
HIGH STRENGTH BOLT M16X70	10	6
SPACER	11	6
LOCTITE 262	12	NEED
HIGH STRENGTH BOLT M24X2X40	13	1
SEAL WASHER W24	14	1
PLATE SHIM(t=0.8)	15	NEED
PLATE SHIM(t=2.0)	16	NEED
OIL LEVEL GAGE	17	1

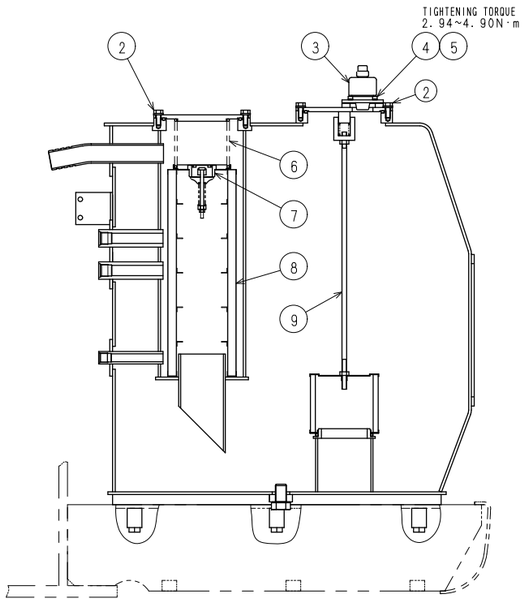

A ~ A

90° TURN

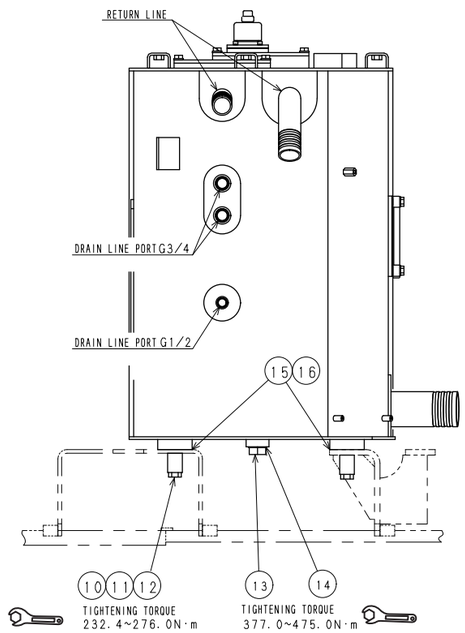

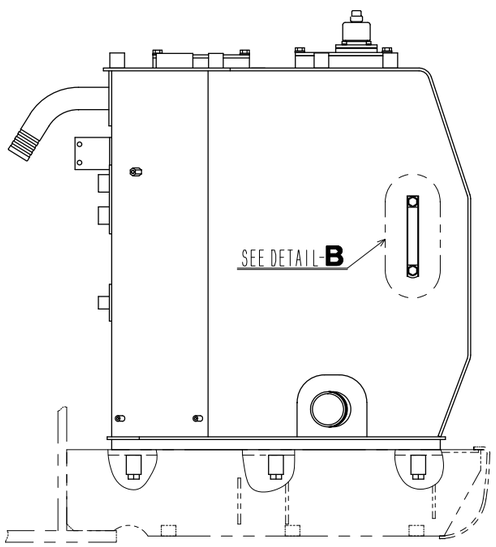

NOTES

1) THE SPECIFICATIONS OF SUMP TANK REFER TO THE BELLOWS.
   - TANK CAPACITY ; 313 L
   - CAPACITY OF HYDRAULIC OIL ; 175 L
   - RATED PRESSURE RANGE ; -4.0~68.6 kPa

2) TIGHTEN BOLTS ⑩ TO THE INDICATED TORQUE AFTER APPLYING LOCTITE #262 TO THE THREAD.

3) BE CAREFUL THAT PAINT AND GASOLINE NOT ADHERE TO HYD. OIL GAUGE. NO USE THINNER AND LIGHT OIL etc WHEN PAINT AND GASOLINE ADHERE TO HTD. OIL GAUGE.

4) THE HYD. OIL GAUGE SHOULD BE INSTALLED AS THIS DRAWING. (THE SIDE OF R-SHAPE SHOULD BE BOTTOM SIDE.)

KSJ11140-D00

https://truckmanualshub.com/

Rotating Joint

Sumitomo Part No.	KSA1305	
Operating pressure	High pressure passage (ABCD)	34.3 MPa
	Drain port (T)	1.0 MPa
	Pilot port (P)	3.9 MPa
Hydrostatic test pressure	High pressure passage (ABCD)	51.5 MPa
	Drain port (T)	2.0 MPa
	Pilot port (P)	5.9 MPa
Flow	High pressure passage (ABCD)	360 L/min
	Drain port (T)	40 L/min
	Pilot port (P)	31 L/min
Number of revolutions		15 min^{-1}
Torque	When pressurizing 2 ports	196 N·m
Port A	Forward right	G1
Port B	Forward left	G1
Port C	Backward right	G1
Port D	Backward left	G1
Port E	Drain port	G1/2
Port F	Pilot port	G1/4
Weight	56 kg	

Solenoid Valve

Sumitomo Part No.	KHJ15460	
Manufacturer	YUKEN KOGYO CO., LTD.	
Valve specifications		
Maximum flow	P → B : 20 L/min	Other : 5 L/min
Rated pressure	4.5 MPa	
Solenoid specifications		
Operating voltage	DC 20 to 32 V	
Current	17.0 W or less	
Weight	7.0 kg	

https://truckmanualshub.com/

Controls

Control Valve

Sumitomo Part No.	KSJ3106
Manufacturer	KYB Corporation
Maximum flow	284 L/min
Pressure setting for overload	27.4 MPa (at 20 L/min) when boom down
	39.2 MPa (at 20 L/min) other
Pressure setting for main relief	34.3 MPa (at 190 L/min)
	37.3 MPa (at 165 L/min) at boosting
Pressure setting for foot relief	2.89 MPa (at 53 L/min)
Functions	Straight travel circuit
	Boom up / 2-speed internal confluence for arm
	Boom/Arm load holding circuit
	Boom down regenerative circuit
	Arm in forced regenerative circuit
	Variable throttle valve in the parallel circuit arm
	Swing priority variable throttle valve
	Backup 2-speed confluence
Weight	192 kg

https://truckmanualshub.com/

Remote Control Valve (Left / Right, Travel Operations)

Valve for Left / Right Operations		
Sumitomo Part No.		KRJ5804
Manufacturer		Kawasaki Precision Machinery Ltd.
Operating pressure		3.92 MPa
Secondary pressure		0.64 to 2.45 MPa: Primary short type
Operating angle	Ports 1, 3	19×
	Ports 2, 4	25×
Operating torque	Port 1	1.18 to 2.67 N · m
	Port 3	0.94 to 2.38 N · m
	Ports 2, 4	1.37 to 3.19 N · m
Weight		1.8 kg

Valve for Travel operation		
Sumitomo Part No.		KNJ2557
Manufacturer		Nishina Industrial Co., Ltd
Oparating pressure		3.92 MPa
Secondary pressure		0.64 to 2.45 MPa: Primary short type
Operating angle		12.4×
Operating torque	Valve	4.16 to 10.6 N · m
	Damper	4.90 N · m (at 0.0275 m/s)
Weight		10.5 kg

https://truckmanualshub.com/

Backhoe Attachments

Cylinder

Boom cylinder (R.H / L.H)	
Sumitomo Part No.	KSV1925 / KSV1926
Manufacturer	ZENOAH
Cylinder bore	dia. 145 mm
Rod diameter	dia. 100 mm
Max. retracted length	2090 mm
Stroke	1495 mm
Dry weight	279 kg

Arm cylinder	
Sumitomo Part No.	KSV1927
Manufacturer	ZENOAH
Cylinder bore	dia. 170 mm
Rod diameter	dia. 120 mm
Max. retracted length	2445 mm
Stroke	1748 mm
Dry weight	462 kg

Bucket cylinder	
Sumitomo Part No.	KSV1928
Manufacturer	ZENOAH
Cylinder bore	dia. 150 mm
Rod diameter	dia. 105 mm
Max. retracted length	1870 mm
Stroke	1210 mm
Dry weight	276 kg

https://truckmanualshub.com/

Attachments

SH330-3B / SH330LC-3B Bucket Types

● : Standard bucket
◎ : For general digging (Specific gravity: 2.0 ton/m^3 or less)
○ : For light digging (Specific gravity: 1.6 ton/m^3 or less)
△ : For loading only (Specific gravity: 1.2 ton/m^3 or less)
× : Do not use

Bucket capacity (m^3)		1.15 STD	1.4 STD	1.4 HD	1.6 STD	1.8 STD
Number of teeth		4	5	5	5	5
Width (mm)		1233 (1100)	1435 (1302)	1424 (1310)	1575 (1442)	1733 (1600)
Type of arm specified	Long arm (4.04 m)	●	○	○	×	×
	Standard arm (3.25 m)	◎	●	◎	○	×
	Short arm (2.63 m)	◎	◎	◎	●	○

※ The side-cutter is not in the size in ( ) of the width of the bucket.

SH350HD-3B Bucket Types

● : Standard bucket
◎ : For general digging (Specific gravity: 2.0 ton/m^3 or less)
○ : For light digging (Specific gravity: 1.6 ton/m^3 or less)
△ : For loading only (Specific gravity: 1.2 ton/m^3 or less)
× : Do not use

Bucket capacity (m^3)		1.4 HD	1.6 HD
Number of teeth		5	5
Width (mm)		1424 (1310)	1564 (1450)
Type of arm specified	Standard arm (3.25 m HD)	●	○
	Short arm (2.63 m)	◎	●

※ The side-cutter is not inthe size in ( ) of the width of the bucket.

https://truckmanualshub.com/

Fuel / Lubricants for Different Ambient Temperature Settings

> ⚠ Consult your distributor for recommended fuel / lubricants when you operate the machine in temperatures other than between 32×F and 104×F (-20×C and 40×C).

Fuel / Oil

Refer to the table for proper fuel / oil according to the temperature range. Refer to Grease / Oil and Elements for proper oil levels.

Antifreeze

Add antifreeze when the temperatures falls below 32×F (0×C). As for the ratio, refer to the section for cold weather conditions.

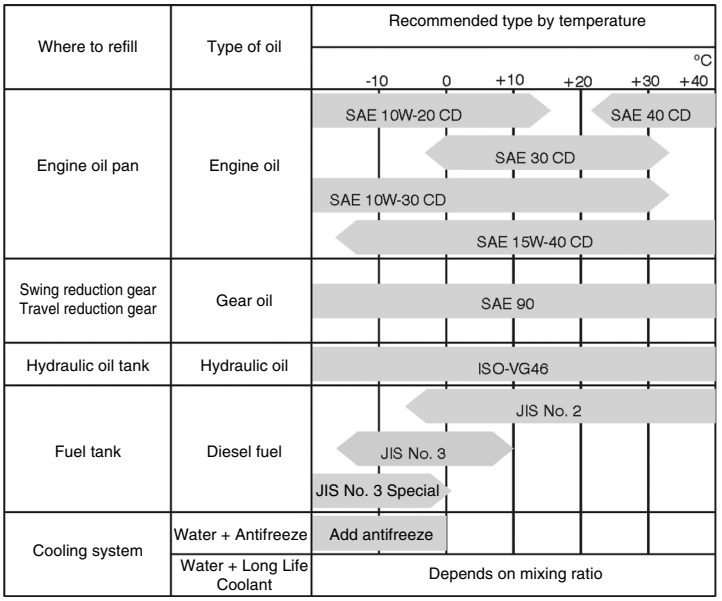

Genuine Sumitomo Parts and Elements

Listed below is our genuine oil. We guarantee the premium quality for heavy machinery use. We recommend that you use our genuine products to fully enhance the performance of your machine.

Type of oil	Name of genuine oil	Notes		Part No.
Engine oil	Clean Dash (for general use)	API-CD grade, SAE30	(20 L)	WEB0005
	Clean Dash (for cold weather)	API-CD grade, SAE10W-20	(20 L)	WEB0007
		API-CD grade, SAE10W-30	(20 L)	WEB0071
Gear oil	Clean Elite	API-GL-4 grade, SAE90	(20 L)	WEB0009
		API-GL-5 grade, SAE80W-90	(20 L)	WEB0075
Hydraulic oil	Clean Red ECO10000	ISO-VG46	(20 L)	WEB0150
Extreme pressure grease	Clean Cassette	Extreme pressure type EP Lithium grease No. 2	(400 g)	WEB0012
Lubricant	Clean Gold Spray	Molybdenum lubricant, spray type	(330 g)	WEB0001
	Clean Gold Grease	Molybdenum lubricant, grease	(2.5 kg)	WEB0002
Antifreeze	Clean Coolant	Long life coolant JIS Type 2 (L.L.C)	(4 L x 6)	WEB1007

https://truckmanualshub.com/

Engine fuel and maintenance of fuel filters

In order to meet the emission control regulation of 3rd-stage, the engine components have been made precisely and they are to be used under high-pressure conditions.
Therefore, the specified fuel must be used for the engine.
As a matter of course, not only the guarantee will not be given for the use of a fuel other than the specified but also it may invite a serious breakdown.
In addition, since suitable specifications for the fuel filter elements have been established for this engine, use of the genuine filter is essential.
The following describes the specifications and the requirements of the fuel to be applied, and maintenance of the fuel and the fuel elements.

1. Fuel to be applied

(1) Selection of fuel

Following conditions must be met for the diesel engines, that is the one;

[1] In which no dust even fine one is mixed,
[2] With proper viscosity,
[3] With high cetane rating,
[4] With good flow properties in lower temperature,
[5] With not much sulfur content, and
[6] With less content of carbon residue.

(2) Applicable standards for diesel fuel

Applicable Standard	Recommendation
JIS (JAPANESE INDUSTRIAL STANDARD)	NO.2
DIN (DEUTSCHE INDUSTRIE NORMEN)	DIN 51601
SAE (SOCIETY OF AUTOMOTIVE ENGINEERS) Based on SAE-J-313C	NO. 2-D
BS (BRITISH STANDARD) Based on BS/2869-1970	Class A-1

If a standard applied to the fuel for the diesel engine is stipulated in your country, check the standard for details.

(3) Requirements for diesel fuel

Although conditions required for the diesel fuel are illustrated above, there are other requirements exerting a big influence on its service durability and service life.
Be sure to observe the following requirements for selecting fuel.

Sulfur content	2500 ppm or less
HFRR*	460 μm or less
Water content	0.05 wt% or less

* HFRR (High-Frequency Reciprocating Rig.): An index showing lubricating properties of the fuel.

https://truckmanualshub.com/

Sulfur content reacts to moisture to change into sulfuric acid after combustion.
Use of a fuel containing much sulfur content allows it to accelerate internal corrosion and wear.
In addition, much sulfur content quickens deterioration of engine oil allowing its cleaning dispersive property to be worse which results in acceleration of wear of sliding portions.
HFRR is an index that indicates lubricating property of a fuel.
Large value of the index means poor lubrication so that seizure of the machine components may result if such a fuel is used.
Since a fuel with high HFRR value also has lower viscosity, it can easily be leaked out.
If the fuel is mixed with the engine oil, the oil is diluted to deteriorate its lubricating property resulting in acceleration of wear.
Water content allows inside of the fuel tank to rust which in turn blocking the fuel line and the fuel filter.
This may also cause wear and seizure of the machine components.
If atmospheric temperature goes below the freezing point, moisture content in the fuel forms fine particle of ice allowing the fuel line to be clogged.
Obtain table of analysis for the fuel you are using from the fuel supplier to confirm that it meets the criteria described above.

Important

If a fuel which does not meet the specifications and the requirements for the diesel engine, function and performance of the engine will not be delivered.
In addition, never use such a fuel because a breakdown of the engine or an accident may be invited.
Guarantee will not be given to a breakdown caused by the use of a improper fuel.
Some fuels are used with engine oil or additives mixed together with diesel engine fuel.
In this case, do not use these fuels because damage to the engine may result as the fuel has been contaminated.
It is natural that the emission control regulation of 3rd-stage will not be cleared in case where a fuel that does not meet the specifications and the requirements is used.
Use the specified fuel for compliance of the exhaust gas control.

Important

It you use diesel fuel which contains much sulfur content more than 2500 ppm, be sure to follow the items below for the engine oil selection and maintenance of engine parts.
Guarantee will not be given to breakdowns caused by not to follow these items.

[1] Selection of engine oil
Use API grade CF-4 or JASO grade DH-1.

[2] Exchange the engine oil and engine oil filter element by periodical interval below.

Engine oil	Every 250 hour of use
Engine oil filter element	Every 250 hour of use

[3] Inspect and exchange the EGR parts and fuel injector parts of engine by periodical interval below.

EGR (*) parts	Every 3000 hour of use
Fuel injector parts	Every 3000 hour of use

* EGR : Exhaust Gas Recircultion
For the detail of inspection and replacement for the above engine parts, please contact your nearest SUMITOMO outlet.

[4] In addition above if the value of HFRR or water content in the fuel you use is more then limitation in above table of this manual, please also contact your nearest SUMITIMO outlet.

https://truckmanualshub.com/

2. Maintenance of fuel filters

(1) Be sure to use the genuine fuel filters.

The fuel injection system is precisely constructed and the genuine filter employs finer mesh than conventional filters to improve protection of machine equipment.
If a filter with coarse mesh is used, foreign object passing through the filter enters into the engine so that machine equipment can wear out in a short period of time.

Important

If a fuel filter other than the genuine filter is used, guaranty will not be applied to a fault caused by the use of a wrong filter.

(2) Two kinds of fuel filter, the pre-filter and the main filter, are mounted on the machine.

Be sure to use the genuine fuel filters and replace them at a periodic intervals.
Replacement criteria

	Every 250 hour of use	Every 500 hour of use
Pre-filter	○	
Main filter		○

Since the pre-filter also has a function of water separation, discharge water and sediment when the float reaches lower part of the filter elements.

(3) Time to replace filters may be advanced according to properties of the fuel being supplied.

Running the engine with the fuel filter blocked may cause the engine to be stopped due to establishment of engine error code.
If much foreign objects are found in the fuel, carry out earlier inspection and regular replacement of the filters.

(4) If dust or water get mixed with the fuel, It may cause the engine trouble and an accident.

Therefore, take measures to prevent dust and/or water from being entered in the fuel tank when supplying fuel.
When supplying fuel directly from a fuel drum can, leave the drum as it stands for a long period of time to supply clean fuel standing above a precipitate.
If it is hard to leave the drum for a long period of time, install a fuel strainer and a water separator before the fuel tank of the machine to supply clean fuel.

(5) Water drain cock is provided on the bottom side of the fuel tank.

Drain water before starting the engine every morning.
In addition, remove the cover under the tank once a year to clean up inside of the tank.

https://truckmanualshub.com/

Engine System Diagram

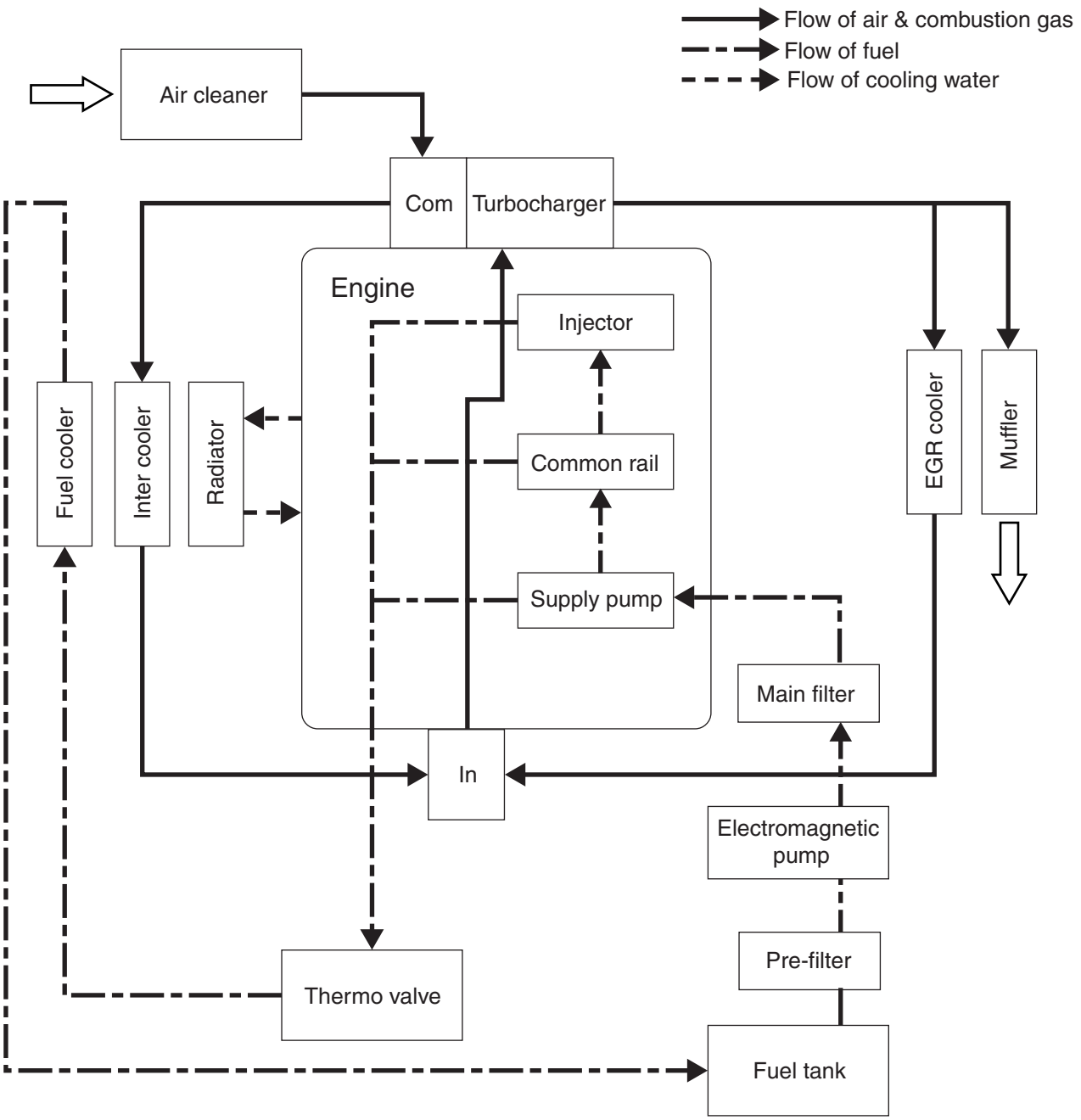

Refer to maintenance section for maintenance of filter

https://truckmanualshub.com/

Disposable Items

Replace disposable items, such as filter elements and bucket teeth, either when the service intervals recommend or before they reach maximum life span.
We recommend that you use our genuine parts / elements guaranteed for premium quality.
Monitor those disposable items and replace when necessary. This will save your money in the long run.
The few items in parentheses ( ) in the list need to be replaced with the matching item to be replaced.

Name of disposable item		Quantity	Part No.	When to replace
Engine oil filter		1	KHH0533	Every 500 hrs.
Fuel filter element	Main	1	KHH0534	Every 500 hrs.
	Pre	1	KHH10590	Every 250 hrs.
Fuel tank filter element		1	KHH0500	—
Pilot oil filter	Element	1	KBJ1691	Every 2000 hrs.
	(O-ring)	(1)	KHJ1032 (JASO 6605-2053)	
Return filter element		1	KSJ2756	Every 2000 hrs.
Air cleaner element	outer	1	KSH0933	Every 1000 hrs.
	inner	1	KSH0932	Every 1000 hrs.
Air breather	element	1	KRJ3461	Every 1000 hrs.
	Packing	1	KRJ3463	—
Line filter element	(if equipped)	1	KRJ3547	—
Nephron filter		1	KHJ0738	Every 2000 hrs.
Suction filter		1	KSJ2675	Every 5000 hrs.
Air filter element (Air conditioner)	outer	1	KHR2772	Every 5000 hrs.
	inner	1	KHR2848	
Bucket	Point	4	KSV1211	Every 500 hrs.
	Locking pin	4	KSV1213	Every 500 hrs.
	Side cutter (right)	1	KSV0520	—
	Side cutter (left)	1	KSV0519	—
	Side cutter (HD)	2	KUV0014	—
	High tensile bolt (STD)	8	102R030W090N	—
	High tensile nut (STD)	8	162R030VN	—
	High tensile bolt (HD)	6	102R033W090N	—
	High tensile nut (HD)	6	162R033VN	—

https://truckmanualshub.com/

Grease / Oil and Elements Replacement

LUBRICATION CHART

REF. NO.	DESCRIPTION	NO. POINTS	SPECIFICATION	INTERVAL (hr) 50	250	500	1000	2000	5000
①	FRONT ATTACHMENT PIN	2	EP. GREASE No. 2	○					
②	FRONT ATTACHMENT PIN (EMS)	15					○		
③	TURNTABLE BEARING	2				○			
④	SWING RING GEAR	21kg				○			
⑤	ENGINE OIL PAN	38ℓ	ENGINE OIL			◎			
⑥	SWING GEAR REDUCER	6.0ℓ	GEAR OIL		△		◎		
⑦		0.8kg	EP. GREASE No. 2					○	
⑧	TRAVEL GEAR REDUCER	9.5ℓ×2	GEAR OIL		△			◎	
⑨	HYDRAULIC SUMP TANK	350ℓ	HYDRAULIC OIL						◎
⑩	ENGINE RADIATOR	30ℓ	WATER WITH LONG LIFE COOLANT	EVERY 2 YEARS					
⑪	FUEL TANK	580ℓ	LIGHT OIL	WHEN REQUIRED					
A	PILOT LINE FILTER	1	ELEMENT (KBJ1691)	△				◎	
B	FUEL FILTER	1	ELEMENT (KHH0534)			◎			
C		1	ELEMENT (KHH10590)		◎				
D	ENGINE OIL FILTER	1	ELEMENT (KHH0533)			◎			
E	RETURN FILTER	1	ELEMENT (KSJ2756)	△				◎	
F	SUCTION FILTER	1	ELEMENT (KSJ2675)				□		◎
G	AIR CLEANER OUTER	1	ELEMENT (KSH0933)		□		◎		
H	AIR CLEANER INNER	1	ELEMENT (KSH0932)				◎		
I	AIR BREATHER	1	ELEMENT (KRJ3461)				◎		
J	NEPHRON FILTER	1	ELEMENT (KHJ0738)					◎	
K	AIR FILTER OUTER	1	ELEMENT (KHR2772)	□					◎
L	AIR FILTER INNER	1	ELEMENT (KHR2848)	□					◎

○ : LUBRICATE GREASE
△ : CHANGE INITIALLY
◎ : CHANGE OIL OR REPLACE ELEMENT
□ : CLEAN

RECOMMENDED GREASE AND OIL SPEC. ARE AS FOLLOWS.
EP. GREASE : LITHIUM GREASE NO. 2
ENGINE OIL : API CD SAE 15W-40
GEAR OIL : API GL-4 SAE 90
HYDRAULIC OIL : ISO VG46

NOTES
1. LUBRICATION IS RECOMMENDED FOR THE FRONT ATTACHMENT PINS AFTER THE OPERATION IN THE WATER IS COMPLETED.
2. REFER TO RECOMMENDED OIL SPECIFICATIONS IN DETAIL SHOWN IN THE OPERATOR'S MANUAL.
3. THIS CHART IS PRIOR TO THE ENGINE INSTRUCTION MANUAL.
4. INTERVAL - HOURS ON THIS CHART ARE BASED ON FOLLOWING.
   50 (OR WEEKLY) * 1000 (OR 6 MONTHS) *
   250 (OR MONTHLY) * 2000 (OR 1 YEAR) *
   500 (OR 3 MONTHS) * 5000 (OR 2.5 YEARS) * * WHICHEVER OCCURS FIRST
5. REMOVE THE AIR DEFLATION PLUG IN LUBRICATING GREASE FOR SWING GEAR REDUCER REFER TO THE OPERATOR'S MANUAL FOR DETAILS.

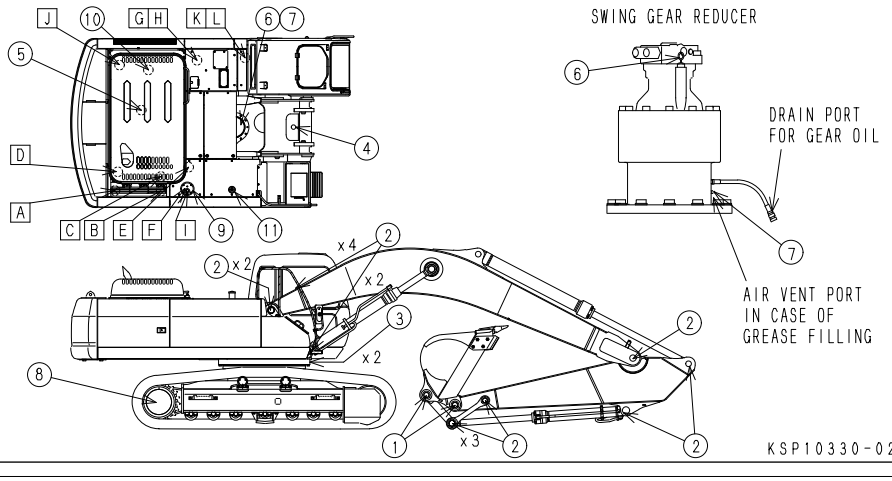

https://truckmanualshub.com/

Replacement Intervals for Hydraulic Oil and Filters When Using Breaker

- When using the hydraulic breaker, the deterioration and/or contamination of hydraulic oil progresses faster compared to ordinary digging work. Be sure to carry out the maintenance more often. In addition, when replacing the hydraulic filters, also measure the cleanliness and deterioration of the oil.
- Replace the hydraulic oil and filter element, using the graph as a guideline, depending on the operation frequency of the breaker.
- If the breaker work continues during a short period of time and the hour meter exceeds 100 hours during the period, replace the element every 100 hours.
- Replace the return filter for the breaker at the same interval as the element. Additionally, if using a filter with indicator, change the filter according to the indicator's indication.

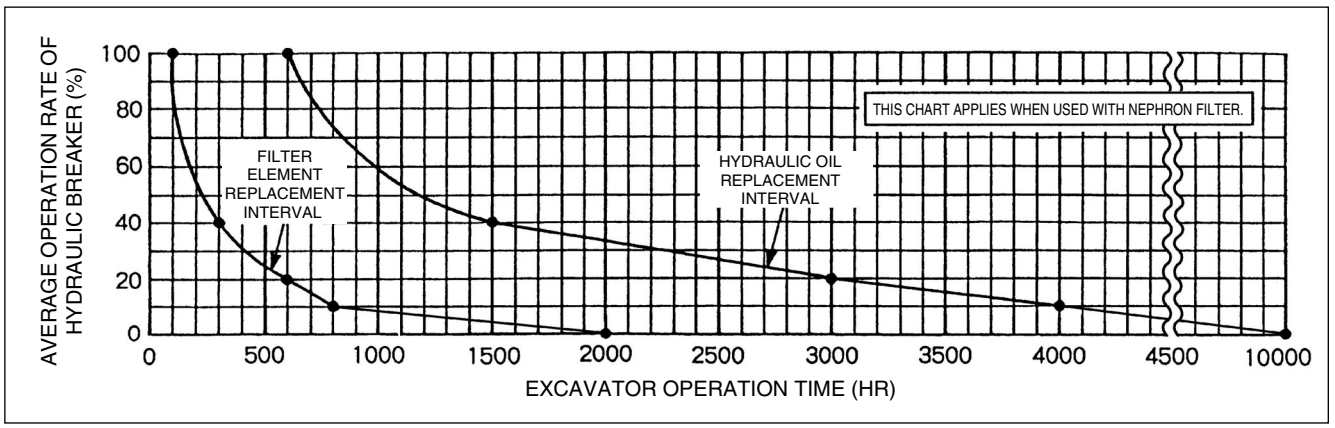

https://truckmanualshub.com/

Inspection and maintenance when using the breaker: we recommend having the hydraulic oil checked by specialists (sampling)

Contamination and deterioration of the hydraulic oil tends to progress quickly since breaker work is extremely harder for the hydraulic shovel compared with excavation work.
If the machine is continuously used with contaminated or deteriorated hydraulic oil, it can cause malfunction of the control valves, earlier wear of the hydraulic pumps and damage to the hydraulic circuits as a whole. Carry out inspection and maintenance of hydraulic oil periodically as outlined below:

Inspection and Maintenance of Hydraulic Oil and Filters Based on Frequency of Breaker Use													
Recommended Hydraulic Oil Servicing Intervals		Use frequency 100%			Use frequency 40%			Use frequency 20%			Use frequency 10%		
Inspection/Maintenance Location	Time	10	100	600	10	300	1500	10	600	3000	10	800	4000
Hydraulic Oil		○		◎	○		◎	○		◎	○		◎
Return Filter			◎			◎			◎			◎	
Suction Filter			◇	◎		◇	◎		◇	◎		◇	◎
Drain Filter			◎			◎			◎			◎	
Pilot Filter			◎			◎			◎			◎	
Nephron Filter			◎			◎			◎			◎	
Line Filter			◎			◎			◎			◎	
Measure hydraulic oil contamination		Every 200 Hrs			Every 300 Hrs			Every 600 Hrs			Every 800 Hrs		

○ Inspect, add ◎ Change ◇ Clean or change

When the hour meter exceeds 100 hours and breaker operations are done continuously for short periods, change the element each time.