https://truckmanualshub.com/

EQ1030T47D-820
Light Commercial Truck

Service Manual

PEOPLE'S REPUBLIC OF CHINA

DONGFENG AUTOMOBIL CO.,LTD.

2006, 6

https://truckmanualshub.com/

TOC

General

QD32 Engine

Clutch

Transmission

Front Suspension

Rear Axle & Rear Suspension

Propeller Shaft & Differential

Steering System

Brake System

Cab & Frame

Electric System

https://truckmanualshub.com/

General

GL

TOC

Preventive Measures GL-2
How to Use Manual GL-3
Maintenance Specifications GL-4
Grease Application Place and Schedule GL-7
Main Adjusting Data GL-8
Lubricant GL-8
Capacity Data GL-8
Fuel GL-9
Engine Lubricant GL-9
Gear Oil GL-9
Transmission Gear Oil GL-10
Lubricating Grease GL-10
Fluid for Brake and Clutch GL-10
Engine Coolant GL-10
Tightening Torque GL-10

https://truckmanualshub.com/

General

This manual mainly contains maintenance and service method of the DONGFENG STAR EQ1030T47D-820 light commercial truck.

DONGFENG STAR	Engine	Equip
EQ1030T47D-820	CYQD32 diesel engine	COE, single row, with front independent suspension, power steering, front disc and rear drum brake

To use vehicles safely and efficiently, it is important for you to read the manual thoroughly and make sure that you are familiar with the items that mark "Note".

Due to continuous improvements on our vehicles, maybe there are some instructions in the manual that does not compliance with the actual vehicles. Please consult the local agency for the latest news. The informaion in this manual are correct before issuance, DONGFENG reserve the rights of changing any of the content without notice.

Maintenance method varified due to different skill level, method, tools and available parts that serviceman adopts to. Any serviceman should firstly take into consideration on personal safety and vehicle safety when working.

The Application File Section of Test Department, the Commercial Product R & D Institute of DONGFENG AUTOMOBILE CO., LTD. is in charge of compiling.

2006, 6

https://truckmanualshub.com/

Preventive Measures

See preventive measures below to get safe operation and suitable maintenance surely. These measures will not be repeated in the next pages.

1.Do not let engine run too long absolutely unless it is under special ventilation to ensure that there is good ventilation in working area, no fire things there.

Be careful sternly the any burnable, poisonous things like gasoline, refrigerant etc are used.

Working in a ditch or close environment and contacting any dangerous things, it is necessary any dangerous things,it is necessary to provide good ventilation in the working area, and smoking is prohibited there absolutely.

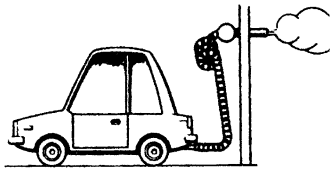

2.When truck is lifted, use a wheel stationary block to stop the truck move. After lifted, used a safe mat to support the truck on a specially designed point of truck to bear the truck weight, then begin its maintenance. These operations should be completed on an even ground.

3.Being unfixed a heavier assembly like engine, gear box or rear axle, be careful to keep it balance, avoid it fall down. And not permit to damage the details next to the brake pipes, etc.

4.Working at some maintenance without battery, turn off the ignition switch and power switch at first, and then take off the negative line on the battery to avoid unexpected accident happening like short circuit.

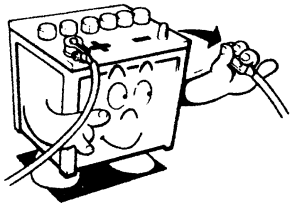

5.To prevent serious burnt accident, avoid touching some hot metal, such as radiator, exhaust manifold and muffler etc. When a engine is hot, do not take off the lid of radiator absolutely.

6.Before maintenance, use the suitable cloth to cover the inner ornaments and ground mat of the truck, in order to keep it in a good condition.

Note:
Be careful not smash the painted surface of the truck.

https://truckmanualshub.com/

7.Before the check and assembly of a disassembled part, clean it first.

8.During the reassembling, oil seal, gasket, O-washer, lock washer and split pin should use the new one.

9.Replace the outer and inner rings of tapered roller bearing in whole set.

10.Arrange the disassembling procedures according to the part assembling order.

11.Mark on the disassembled brake pipe about the connecting relationship.

12.Use suitable lubricating oil, brake fluid,cooling liquid and seal glue according to standard.

13.Use general and special tools to ensure maintenance safely and efficiently.

14.Deal properly with drained lubricating oil and solvent used to wash parts.

How to Use Manual

1.Look up contents as quickly as possible. The contents of every section are completely listed on the first page of each chapter.

2.The subject of each chapter is on the top of every page, showing the name of each system of assembly.

3.The page code of each chapter is of two or three letters, to show the name and page code of a certain chapter(ex, "BR-5").

4.A larger diagram is used to show the separated construction of an assembly, its contents: tightening torque, lubricating points, and the other information for maintenance. These are dor the reference of maintenance, and you have to see the SPARE PARTS CATALOG for parts booking.

5.The smaller diagram mainly indicate: every main checking procedures, all the tools needed, work skills latent procedures which are not listed in the larger diagram above. To some more complicated assembly system, in dictate them with diagrams one by one.

6.The measuring units in this book are mainly international standard ones.

7.The data and axplanation of maintenance are in the last pages of every chapter to be the reference.

8.In the procedure marked "Warning","Notes","Caution" strictly observe these procedure norms, to avoid body hurt and damage to some parts.

Warning: indicates if you do not follow this instruction, it will cause body hurts.

Note: indicates if you do not follow this instruction, it will cause some parts damaged.

Except some instructions of warning and notice, again some helpful information are provided.

Maintenance Specifications

It is necessary for periodical inspection and maintenance of a vehicle to extend its service life, and improve on its power performance and fuel economy. So periodical inspection and maintenance should be carefully and maintenance should be carefully and strictly implemented in accordance with the following specifications so as to achiveve maximal economic and social benefits.

The users have to do the maintenance according to this chapter. The following schedule is only for maintenance items with in 4,0000km, it is also suitable for normal maintenance items after 40,000km.

△—Running-in Maintenance Mileage （1,500~2,500km）

☆—Running in maintenance items

★—Normal maintenance items

Note:

Customers should carry out the inspection and maintenance intervals according to the different area condition. Properly shorten the maintenance intervals can ensure the truck to get the reasonable maintenance and move reliability. Never prolong the intervals.

CYDQ32 engine

R=Replace I=Inspect

Replace if necessary.

A=adjust C=Clean D=Dry and check

Maintenance Items	Maintenance Intervals （× 1000km）															
	5	10	15	20	25	30	35	40	45	50	55	60	65	70	75	80
Replace lubricant ★	R	R	R	R	R	R	R	R	R	R	R	R	R	R	R	R
Replace oil filter cartridge ★		R		R		R		R		R		R		R		R

Maintenance Items	Maintenance Intervals （× 1000km）								
	1	10	20	30	40	50	60	70	80
Exhaust device and tighting of other nuts	I								
Drive belt	I		I		I		I		I
Engine coolant					R				R
Cooling system			I		I		I		I
Fuel pipeline					I				I
Air filter		C	C	C	R	C	C	C	R
Air inlet and outlet valve	A		A		A		A		A
Fuel spray nozzle	请看注意 （1）								
Idle speed	I		I		I		I		I

Note:

If the engine power apparently dropped, or exhausted black smoke, check the starting pressure of the fuel spray nozzle and fuel spray conditions, and adjust if necessary.

If there is a ★ in the maintenance item, it has to follow the "Maintenance in bad using environment " and do the maintenance more frequent.

CYQD32 engine maintenance in bad using enviroment

The maintenance above is in the normal using environment, but if the vehicle is used in a bad environment for a long time, it will be necessary to do the following maintenance more frequent.

A—Dusty area B—Frequent start in short time C—Towing long trailer D—Long tome idle speed E—Extremely bad climate, high temperature or bitter cold area.

Using Environment					Maintenance Item	Operation	Maintenance Interval
A	B	C	D		Oil and oil filter	Replace	Often
					All types	Replace	Often
A				E	Fuel filter	Replace	Every 20,000km

Clutch

Maintenance Items	Maintenance Intervals(× 1,000km）										
	△	4	8	12	16	20	24	28	32	36	40
Check working condition of clutch	☆	★	★	★	★	★	★	★	★	★	★
Check clutch pedal free play	☆	★	★	★	★	★	★	★	★	★	★
Check hydraulic pipe line and pump for leakage	☆	★	★	★	★	★	★	★	★	★	★

Transmission

Maintenance Items	Maintenance Intervals(× 1,000km）										
	△	4	8	12	16	20	24	28	32	36	40
Check transmission for oil leakage	☆	★	★	★	★	★	★	★	★	★	★
Check transmission oil level	☆	★	★	★	★	★	★	★	★	★	★
Check worn condition between transmission and propeller shaft spline	☆	★	★	★	★	★	★	★	★	★	★
Check the connections of control mechanism for looseness	☆					★					★
Replace transmission lubricant oil	☆					★					★

Brake system

Maintenance Items	Maintenance Intervals(× 1,000km）										
	△	4	8	12	16	20	24	28	32	36	40
Check effectiveness of service brake and parking brake	☆	★	★	★	★	★	★	★	★	★	★
Check brake line for oil leakage	☆	★	★	★	★	★	★	★	★	★	★
Check remain hydraulic oil of clutch and brake system	☆	★	★	★	★	★	★	★	★	★	★
Check the tightness of the brake support plate	☆		★		★		★		★		★
Check brake pedal free play			★		★		★		★		★
Check brake shoe for wearing			★		★		★		★		★
Check vacuum booster oil pipe and valve for oil leakage	☆				★				★		
Check brake drum and brake disc for wearing					★				★		
Replace hydraulic oil of clutch and brake system									★		
Check parking brake lever and steel wire for the working condition											★

Steering system

Maintenance Items	Maintenance Intervals(× 1,000km）										
	△	4	8	12	16	20	24	28	32	36	40
Check steering gear and pipe for oil leakage	☆	★	★	★	★	★	★	★	★	★	★
Check the tightening condition of pitman arm	☆	★	★	★	★	★	★	★	★	★	★
Check the tightening condition of steering gear to thr frame	☆	★	★	★	★	★	★	★	★	★	★

https://truckmanualshub.com/

Steering system

Maintenance Items	Maintenance Intervals(× 1,000km）										
	△	4	8	12	16	20	24	28	32	36	40
Check the tightening condition of tie rod ends and drag link joints	☆	★	★	★	★	★	★	★	★	★	★
Check the tightening condition of transition arm and driven arm	☆	★	★	★	★	★	★	★	★	★	★
Check steering gearing device for looseness	☆	★	★	★	★	★	★	★	★	★	★
Check steering wheel for free play and operating	☆		★		★		★		★		★
Check steering gear oil level,add if necessary	☆		★		★		★		★		★
Check spline hub of the steering drive shaft for wear			★		★		★		★		★
Check and adjust front wheel toe-in	☆				★				★		
Check the tightening condition of upper and lower cross arm ball head to steering knuckle	☆			★			★			★	
Clean steering gear and pipe, replace steering gear oil	☆										★
Check front wheel alignment	☆				★				★		
Check the pull rod ball head working condition of the steering system					★				★		

Suspension system

Maintenance Items	Maintenance Intervals(× 1,000km）										
	△	4	8	12	16	20	24	28	32	36	40
Check shock absorber for oil leakage and fasten bracket bolts	☆	★	★	★	★	★	★	★	★	★	★
Clean rear leaf spring and shock absorber	☆	★	★	★	★	★	★	★	★	★	★
Check the working condition of the front independent suspension upper and lower cross arm ball pin and the dust cap	☆	★	★	★	★	★	★	★	★	★	★
Check the working condition of torsion bar fixed adjusting arm	☆		★		★		★		★		★
Tighten U-bolts and nuts of leaf spring during full load	☆		★		★		★		★		★
Check the working condition of front suspension torsion bar and push rod	☆		★		★		★		★		★
Check the working condition of front independent suspendion upper and lower cross arm	☆		★		★		★		★		★
Tighten the connecting bolt of front independent suspension	☆		★		★		★		★		★
Check the tightening condition of leaf spring shackle bolt	☆		★		★		★		★		★
Check the working condition of rubber assist spring	☆		★		★		★		★		★
Check leaf spring and shock absorber for any damage					★				★		
Replace leaf spring pins and sleeves									★		
Check the working condition of front independent suspendion rubber limit block						★					★
Check the vehicle left and right height									★		

＊ If the ball pin dust cap is damaged, replace it immediately, because it may damage the ball pin and cause danger in driving.

Propeller shaft

Maintenance Items	Maintenance Intervals(× 1,000km）										
	△	4	8	12	16	20	24	28	32	36	40
Check shaft connecting part for looseness	☆	★	★	★	★	★	★	★	★	★	★
Check tightening condition of spider bearing of propeller shaft	☆		★		★		★		★		★
Check propeller shaft splines for wear and damage	☆		★		★		★		★		★

Axle & wheel

Maintenance Items	Maintenance Intervals(× 1,000km）										
	△	4	8	12	16	20	24	28	32	36	40
Clean front, rear axle assembly and wheel assembly	☆	★	★	★	★	★	★	★	★	★	★
Check main reductor for oil leakage	☆	★	★	★	★	★	★	★	★	★	★
Check tire pressure and wheel bolt and nut for tightening torque	☆	★	★	★	★	★	★	★	★	★	★
Check tire for wear and damage	☆	★	★	★	★	★	★	★	★	★	★
Check lubricant level of main reductor and clean the vent plug	☆		★		★		★		★		★
Rotate tires			★		★		★		★		★
Replace the main reductor lubricant	☆				★				★		

Other

Maintenance Items	Maintenance Intervals(× 1,000km）										
	△	4	8	12	16	20	24	28	32	36	40
Check the connecting part tightening conditions of cargobody to frame	☆		★		★		★		★		★
Check thelongitudinal and cross member of the cargo body for loose-ness and damage	☆		★		★		★		★		★
Check chassis frame rivets for looseness	☆				★				★		
Check connections of cab for looseness	☆		★		★		★		★		★
Check battery electrolyte level (fill up if it is not enough)	☆		★		★		★		★		★

Periodic Replacement

Periodical replacement parts are hose which deteriorate with lapse of time. These parts are mainly rubber parts such as brake hoses,fuel hoses. It is difficult to predict the safety of these parts when checking them with the method used in the usual predict inspection. Hence, applicable parts must be replaced whether they appear to be usable or not.

Replace Items	Replace Intervals (Year)											
	1	2	3	4	5	6	7	8	9	10	11	12
Rubber parts of brake valves	★	★	★	★	★	★	★	★	★	★	★	★
Rubber hoses of brake system	★	★	★	★	★	★	★	★	★	★	★	★
Rubber hoses for vacuum pump		★		★		★		★		★		★
Rubber hoses of clutch control system		★		★		★		★		★		★
Rubber sealing ring of master and slave cylinder of clutch		★		★		★		★		★		★
Front independent suspension upper and lower cross arm ball pin assembly	★	★	★	★	★	★	★	★	★	★	★	★
Propeller shaft spider assembly	★	★	★	★	★	★	★	★	★	★	★	★
Steering drive shaft spider ball pin assembly	★	★	★	★	★	★	★	★	★	★	★	★

Grease Application Place and Schedule

Greasing should be performed periodically for all parts of the vehicle. Before filling up, clean all dust and dirty from the grease nipples and other parts which are needed to lubricated, then apply grease. After greasing, wipe off the excess grease. Be sure to put the caps back on.The table includes first 40,000km lubricating schedule. You have to follow the schedule after the first several kilometers.

△—Running-in maintenance mileage (1,500~2,500km)

https://truckmanualshub.com/

☆—Running-in maintenance lubrication item
★—Normal driving lubricating item

Place of lubricating	Lubricating interval mileage （× 1,000km）										
	△	4	8	12	16	20	24	28	32	36	40
Slip yoke of steering drive shaft and spider bearing	☆		★		★		★		★		★
Door hinge	☆				★				★		
Door lock, glass regulator, odometer flexible shaft	☆				★				★		
Hub bearing	☆				★				★		

Main Adjusting Data

Adjusting Items		Standard
Air valve clearance (cold)	Inlet valve	0.35mm
	Exhaust valve	0.35mm
Oil pressure of idling engine		69~100kPa
Oil pressure of normal run engine		196~490kPa
Water temperature of normal run engine		80~95 ℃
Tension grade of alternator belt		10~15mm
Free travel of clutch pedal		25~40mm
Free play of brake pedal		20~25mm
Steering wheel free play		10°
Toe-in		0~2mm

Lubricant

Place	Lubricant	Type	Grade
Engine lubricating system	Engine oil	5W/20	API CF-4
Engine cooling system	Antifreeze, anti-rust coolant		
Transmission	Manual operation special oil	75W/90	API GL-4
Main reductor	Industrial gear oil	75W/90	API GL-5
Steering gear	Power steering fluid	ATF-2	
Clutch & brake system	Synthetic brake liquid	901-4	DOT4
Bearing and ball pin	Li-base lubricant grease	2, 3#	SH0535-93

Capacity Data

Part	Capacity (L)
Fuel tank	65
Engine lubricant system	6.5
Water tank and cooling system	13 to full
Transmission	2.7
Main reductor	6.5~5.0 to overflow
Steering gear	to the MAX
Brake system	to the MAX

Fuel

The qualified light diesel oil specified by GB/T19147-2003 could be applied for in China, and the users choose different qualified light diesel oil according to the local temperature.

0# Light diesel oil	Local temperature above 4 ℃
10# Light diesel oil	Local temperature above -5 ℃
20# Light diesel oil	Local temperature between -5 ℃ ~ -14 ℃
35# Light diesel oil	Local temperature between -14 ℃ ~ -29 ℃
50# Light diesel oil	Local temperature between -29 ℃ ~ -44 ℃

As for the vehicle for export, please take the local national regulations and standards and the climate for reference to choose the proper diesel oil.

Engine Lubricant

API CF-4 Grade diesel oil or special oil for CYQD32 is recommended. According to the local air temperature, the user may choose different CF oil with different viscosity grade. Recommended temperature range is as below.

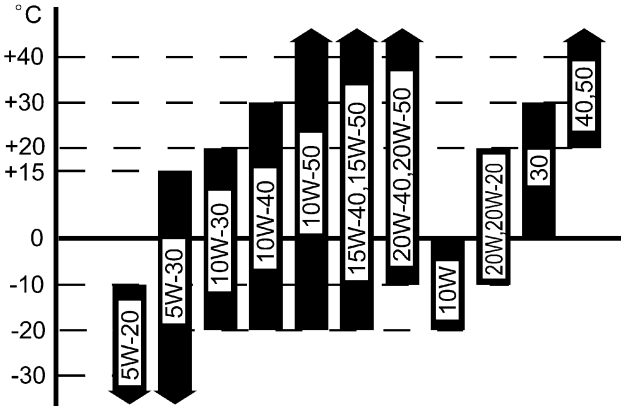

Gear Oil

Middle-load (API GL-4) gear oil, heavy-load (GL-5) gear oil is recommended. The recommended ambient temperature range for all gear oil is as below:

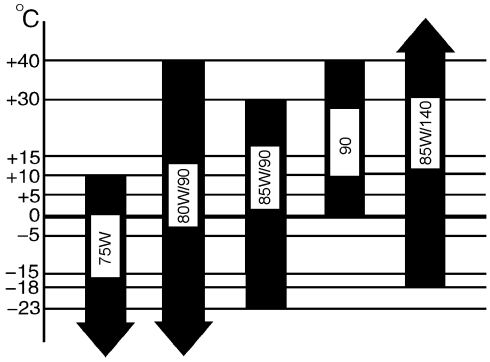

https://truckmanualshub.com/

Transmission Gear Oil

The manually operated gear oil API GL-4, 75W/90 is recommended.

Lubricating Grease

The compound lithium grease is recommended, but the general lithium grease could also be used.

Fluid for Brake and Clutch

The DOT4, 901-4 brake fluid is recommended.

Note:

Never use brake fluid with different quality or type.

Engine Coolant

Long effective frostbite antirust fluid is recommended and its freezing point must be lower than the lowest local temperature for 8 ℃ .

Tightening Torque

Tightening torque of the important part

Part	Tightening torque (N.m)
Upper cross arm and ball connecting part	22~26
Ball joint and steering shaft connecting part	78~98
Buffer rubber and cross member connecting part	62~76
Distance rod front end locking nut	118~157
Distance rod and cross member connecting part	54~71
Lower cross arm fixed nut	108~147
Upper cross arm fixed part on the frame	108~147
Torsion arm and lower cross arm fixed part	50~68
Upper cross arm fixed nut of two ends	71~103
Adjusting nut (on the adjusting arm)	108~127
Lower cross arm cotter pin fixed nut	118~191
Upper bracket nut of front shock absorber	32~42
Tighten nut of front shock absorber upper end	16~22
Nut of front shock absorber lower pin	32~42
Rear leaf spring U bolt and nut	100~105
The fixed part of rubber assist spring	35~47
Leaf spring pin and shackle fixed nut (Q341B12)	80~102
Leaf spring pin fixed bolt (Q151B0818)	16~22
Nut of rear shock absorber upper pin	46~62
Nut of rear shock absorber lower pin	46~62
Engine rear mounting cushion and cross member connecting part	88~108
Engine rear mounting bracket and cushion connecting part	Follow EQB-37-1999
Transmission bolt and rear mounting bracket connecting part	Follow EQB-37-1999

Part	Tightening torque (N.m)
Transition output shaft and propeller shaft connecting part	69~78
Transition control flexible shaft fixed bracket and longitudinal member connecting part	13~16
Fixed bolt of flexible shaft two ends ball joint	25~30
propeller shaft and rear axle connecting part	69~78
Brake pipe joint	15~22
Front wheel nut	118~147
Rear wheel nut	118~147
Engine front mounting bracket and cylinder connecting part	30~41
Engine front mounting cushion nut	46~56
Engine and clutch housing conneting part	39~49
Engine exhaust pipe and vehicle exhaust pipe connecting part	51~65
Steering wheel locking nut	29~39
Steering gear and steering gear drive shaft universal knuckle fork connecting nut	25~29
Steering gear and frame connecting nut	88~98
Steering drop arm locking nut	235~265
Drag link and drop arm connecting nut	88~137
Drag link and transition arm fixed nut	88~137
Middle pull rod and driven arm, transition arm fixed nut	88~137
Steering knuckle arm and tie-rod connecting nut	88~137
Driven arm, transition arm bracket fixed bolt	52~627
Steering knuckle arm and steering knuckle fixed bolt	108~147
Steering limit bracket and frame fixed bolt	72~98
Steering knuckle and upper cross arm ball head fixed nut	78~98
Steering knuckle and lower cross arm ball head fixed nut	118~191
Rocker arm shaft nut	200~230
Middle pull rod clamp locking nut	25~28
Transition arm fixed nut	200~230
Driven arm fixed nut	160~190
Vehicle body front & rear mounting bracket and frame connecting part	60~72
Front and rear fixed part of the vechile body	75~87
Front seat fixed bolt on floor	21~26
Rear seat fixed bolt on floor	43~55
Rear axke 3-way oil pipe joint and rear axle connecting part	21~25
Fuel tank bracket and frame connecting part	21~28
Fuel tank band fixed bolt part	20~23

https://truckmanualshub.com/

Part	Tightening torque (N.m)
Muffler fixed bolt	32~38
Battery frame and frame connecting part	35~47
Battery pressure lever fixed nut part	19~24
Front bumper and cross member connecting part	19~24
Power steering oil pipe joint nut	30~40
Air filter bracket and longitudinal connecting part	21~28
Power steering pump adjusting nut	25~31
Power steering pump adjusting bolt	19~25
Alternator adjusting lever bolt and nut	13~19
Push lever bolt of clutch master cylinder	8~11
Clutch pedal brake lock locking nut	12~15
Clutch pressure disc and flywheel fixed bolt	25~35
Fan fixed bolt	7~9
Push lever nut of brake thruster	16~22

As for the other torques not mentioned, please see the standard of DONGFENG EQB-37-1999.

Note:

No locking spacer, but to make sure the required tightening torque.

When tightening during installing, make use of the oil to lubricate. Do not use the bolt with thread damaged.

Each bolt need to tighten within 2~3 times.

https://truckmanualshub.com/

Clutch

CL

TOC

Precaution and Preparation CL-1
Clutch System CL-3
Clutch Control System CL-4
Clutch Release Mechanism CL-6
Clutch Driven Disc and Pressure Plate CL-7
Service Data and Specifications CL-9

https://truckmanualshub.com/

Clutch

Precaution and Preparation

Precaution:

The DOT 4 901-4 compound brake fluid is recommended for the clutch hydraulic system.

Dirty brake fluid is forbidden to use.

Never let the brake fluid on paint, it may damage the paint coat.

Use tools to assemble or disassemble the clutch pipeline.

Use clean brake fluid to clean the master cylinder, slave clinder and fluid reservoir.

Forbidden to use mineral oil like gasoline, coal oil ,etc, it will erode the rubber parts in the hydraulic system.

Note:

After clean the clutch pressure disc, use the dust collector to clean the dirt, not the compressed air.

Preparation

Specified tools

Base dice

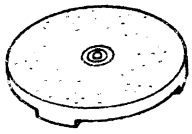

Use for checking the diaphragm spring of clutch cover.

Bush

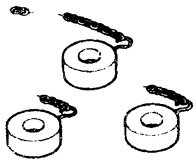

Use for examine the life of pressure plate.

Connecting nut spanner

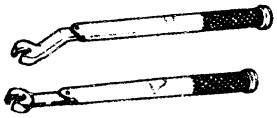

Disassemble and assemble the pipeline of clutch system.

Clutch mandrel

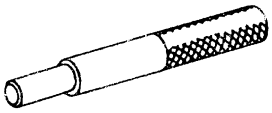

Use for assembling clutch housing and clutch disc (for center)

Diaphragm spring adjusting spanner

Use for adjusting the evenness of the clutch diaphragms spring.

Bearing detacher

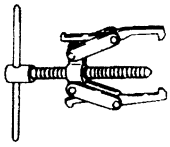

Use for dismantling the release bearing.

https://truckmanualshub.com/

Clutch System

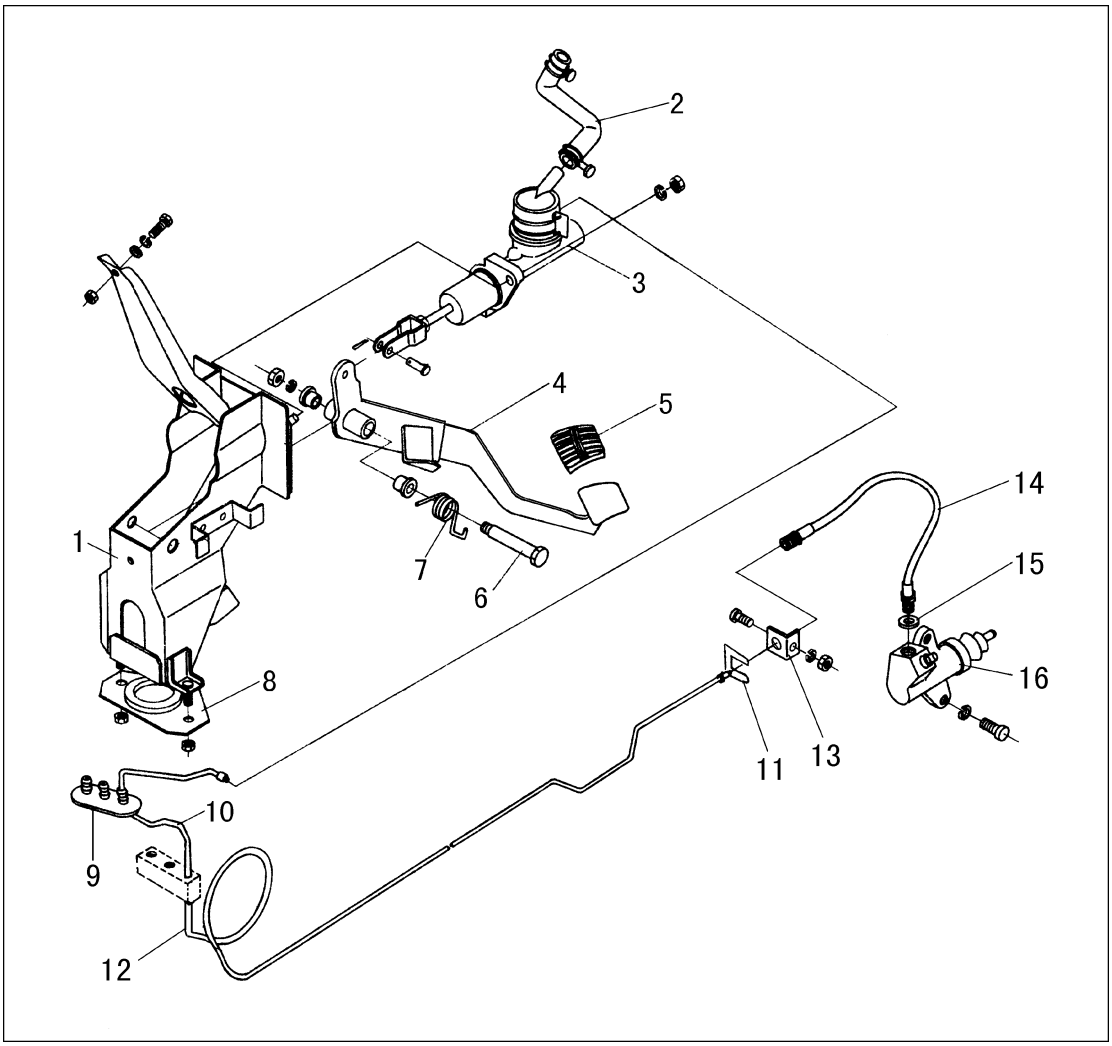

1.Clutch pedal bracket assy
2.Rubber hose assy--oil reservoir to master pump
3.Clutch master pump assy
4.Clutch pedal welding assy
5.Pedal jacket
6.Clutch pedal shaft
7.Clutch pedal return spring
8.Lower fixed board
9.Dustproof
10.Front oil pipe assy
11.Spacer
12.Rear oil pipe assy
13.Clutch rear bent pipe bracket
14.Hose assy
15.Gasket
16.Clutch slave pump assy

Adjusting Clutch Pedal

1.Adjust the pedal height by means the spacing screw.

Height of the clutch pedal H：

160~170mm

2.Adjust the clutch pedal free play by master cylinder push rod: Loose the locking nut when adjusting, turn the master cylinder push rod, then make the push rod withstand the spacer and screw off for 1/5~1/2 circles, screw down the locking nut at last.

Pedal free play A：

30~50mm

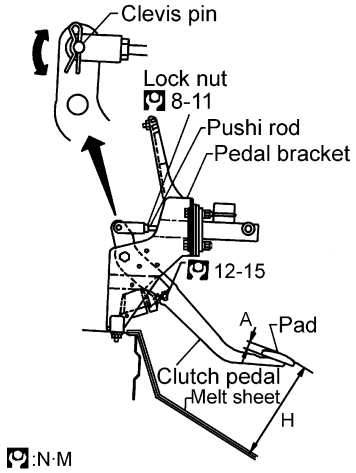

Bleeding Procedure

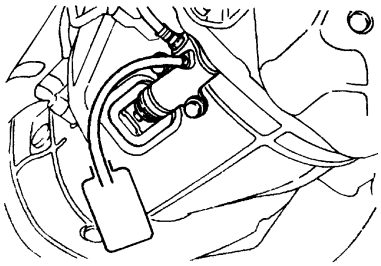

Bleed air according to the following procedure:

Carefully monitor fluid levlel at master clinder during bleeding operation.

1.Fill in reservior with rocommended brake fluid.

2.Connect a transparent plastic tube to air bleeder valve.

3.Fully depress clutch pedal several times.

4.With clutch pedal depressed, open bleeder valve to release air.

5.Tighten the bleed valve.

6.Repeat steps 3 and 5 above until brake fluid flows from air bleeder valve without air bubbles.

https://truckmanualshub.com/

Clutch Control System

Clutch master pump

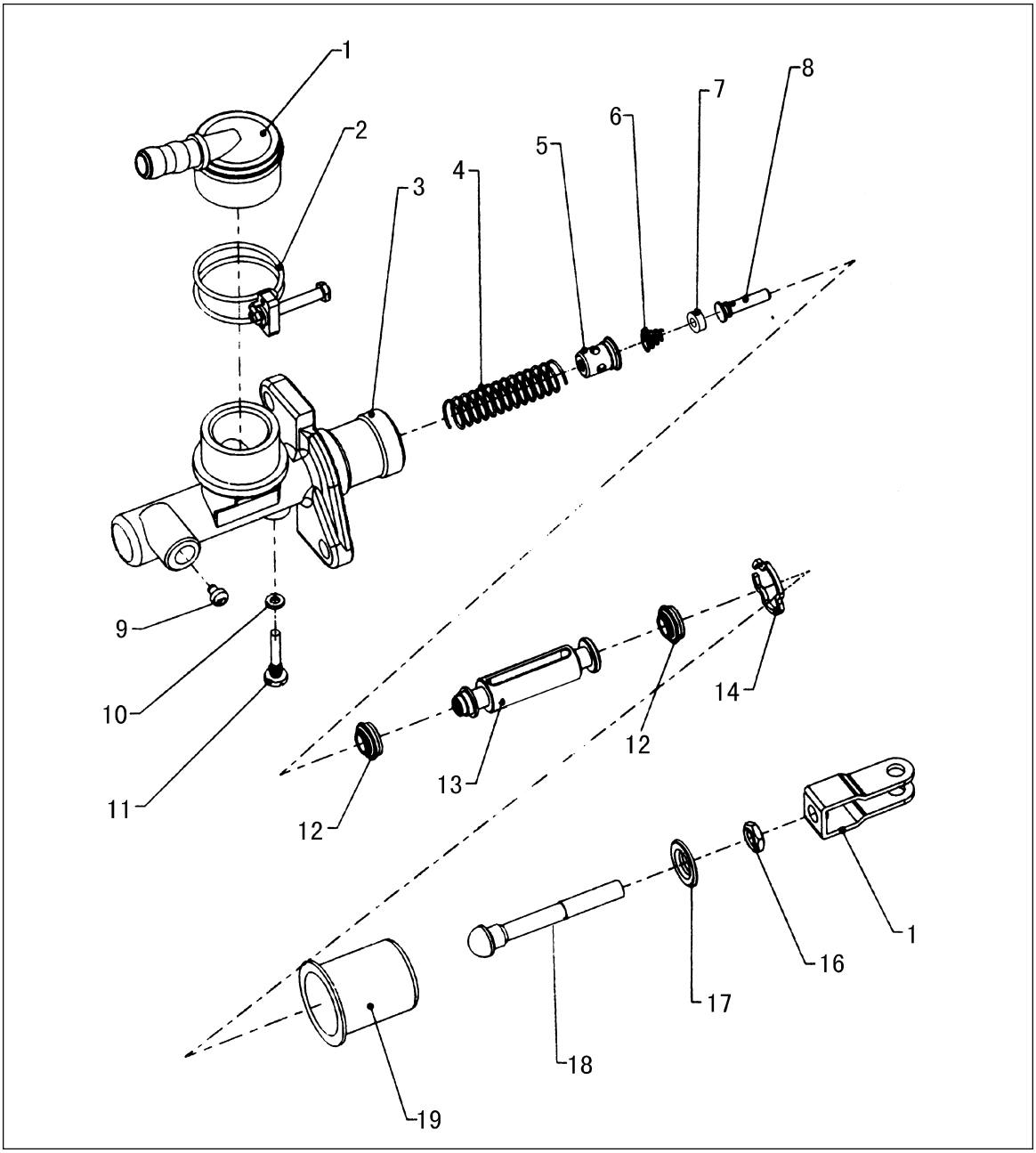

1.Oil intake joint
2.Dual wire clamp
3.Pump body
4.Return spring
5.Piston oil intake valve return spring seat
6.Piston oil intake valve return spring
7.Piston oil intake valve oil seal
8.Piston oil intake valve
9.Oil pipe joint
10.Limit screw seal ring
11.Limit screw
12.Rubber cup
13.Piston
14.Retainer ring
15.Push rod thread fork
16.Hex thin nut
17.Push rod spacer
18.Push rod
19.Dustproof

Disassembly and assembly

Push pistion into cylinder body with screwdriver when removing or tightening valve stopper screw.

Align groove of piston assembly and valve stopper when installing valve stopper screw.

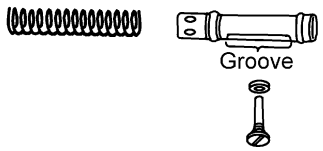

Clutch slave pump

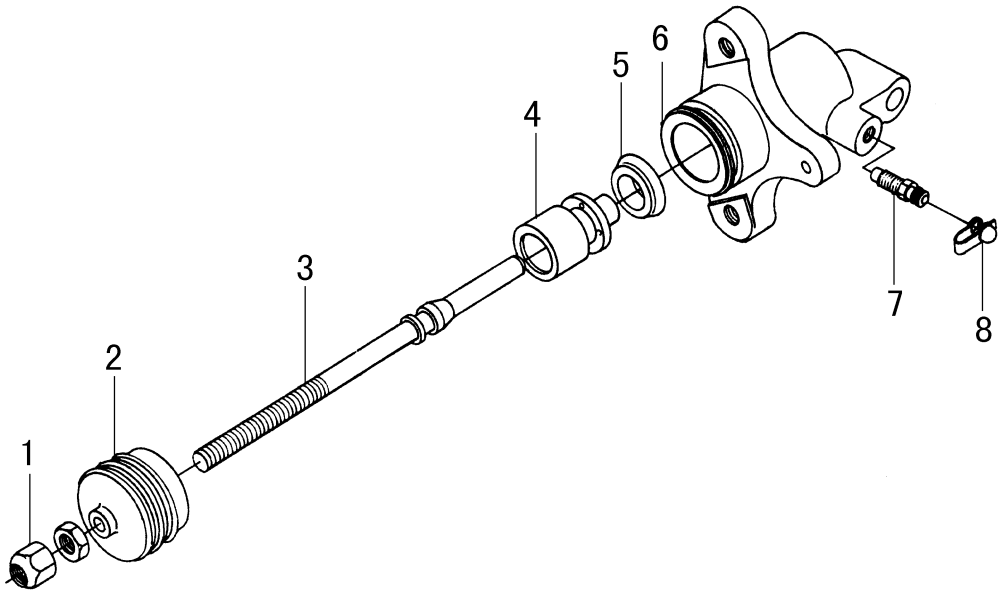

1.Slave pump push rod nut
2.Shield
3.Push rod
4.Piston
5.Rubber cup
6.Pump body
7.Oil drain screw plug
8.Dustproof

Inspection

1.Check rubbing surface of slave cylinder for wear, rust or damage.

2.Check piston cup for wear or damage. Replace if necessary.

3.Check dust cover for cracks, deformation or damage. Replace if necessaty.

4.Check piston spring for wear or damage. Replace if necessary.

https://truckmanualshub.com/

Clutch Release Mechanism

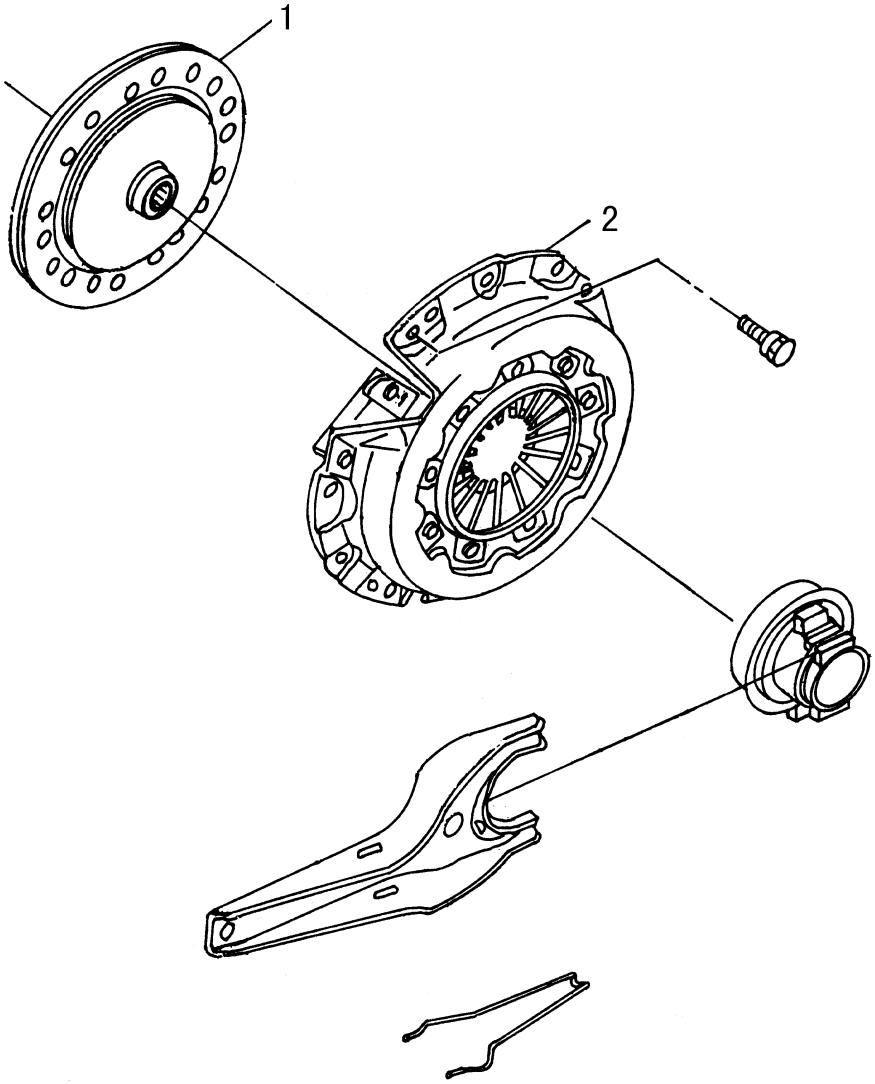

1.Clutch driven disc

2.Clutch cover and pressure plate

Removel and installation

Install retainer spring and spring holder.

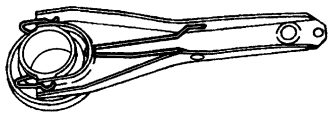

https://truckmanualshub.com/

Remove release bearing.

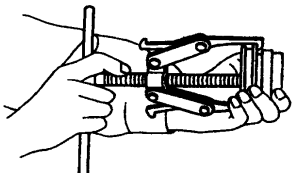

Install release bearing with suitable tolerance.

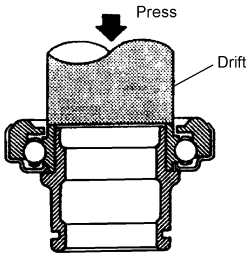

Inspection

Check whether the release bearing has crackle and wear. The release bearing should run smoothly and noiselessly. Change it if necessary.

Check whether the surface of the release bushing and release fork has wear, damage and corrosion. Change them if necessary.

Lubrication

Lubrication the fit surface and the friction surface of the bushing and fork with recommended grease.

Warning

•Too much grease might result in damage to the clutch driven disc

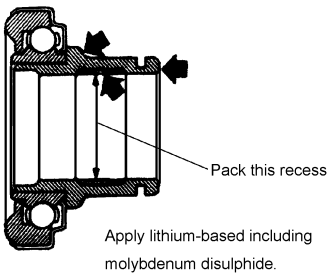

Clutch Driven Disc and Pressure Plate

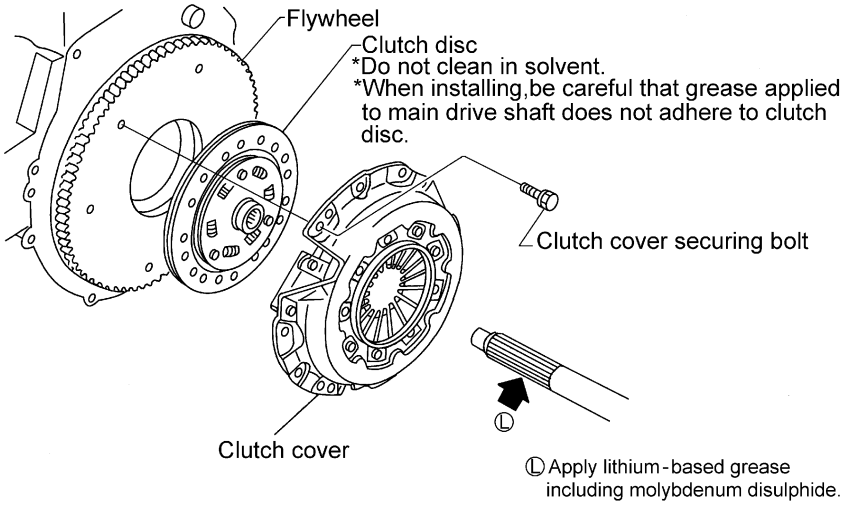

https://truckmanualshub.com/

Clutch Driven Disc

Check

Check the wear of the driven disc;

The wear limit between the friction facing and rivet head: 0.3mm.

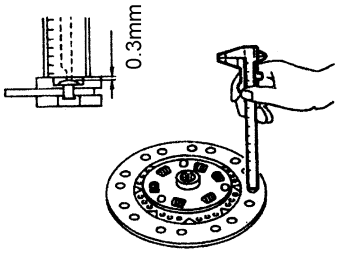

Check up the spline tooth gap and its deviation for the driven disc;

Check whether the driven disc has been burnt, discolored or polluted with oil or grease. Change it if necessary.

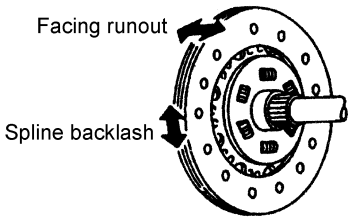

Assembling

Apply some grease on the connecting surfaces and spring.

Note:
•Most grease might result in damage to the driven disc surface.

Clutch Pressure Plate and Flywheel

Checking and adjustment

• Check the height and unevenness of diaphragm spring.

•Put the feeler (T=0.2) on the space bush during checking up the height of the diaphragm spring.

Height of the diaphragm spring：41~43mm

• If the height of the diaphragm spring is measure beyond the set range, change the pressure plate surely.

• Check the worn or damage condition for the diaphragm spring support washer by rocking the pressure plate by listening to the vibration sound. Judge whether there is light crackle sound by patting the rivet gently. Change the pressure plate if necessary.

• Check whether the pressure surface of the pressure plate is burnt or dirtied. Remedy it with the emery paper.

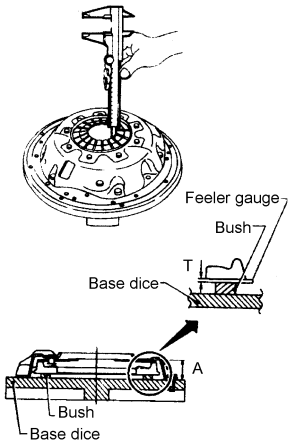

•Check whether the matching surface of the pressure plate and driven disc has deformation or damage. Change them if necessary.

• Adjust the unevenness of the diaphragm spring with tool.

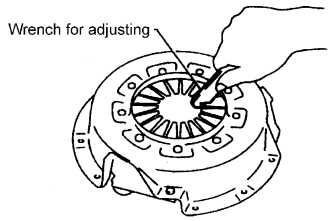

Flywheel check

•Check whether the working surface of the flywheel is burnt or discolored. Remedy it with the emery paper.

Check its surface for planeness.

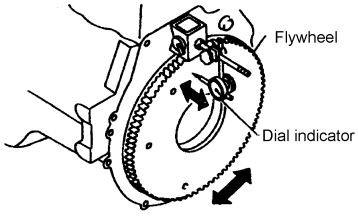

Clutch cover and flywheel

When assemble the clutch pressure plate and driven disc, insert the special tool into the spline hole of the driven disc. (using for central position)

• Tighten the fixed bolts the clutch cover.

• Tighten the bolts as cross procedure shown in the figure with two steps.

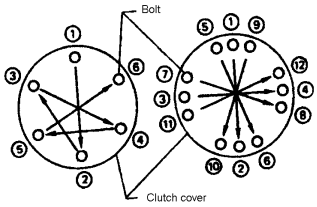

Service Data and Specifications

Clutch driven disc

Outside diameter: 260mm

Thickness: 8.0 ± 0.3mm

Checking and adjusting

Pedal height	160~170
Pedal free travel	30-50mm

The datum measured is referred to distance between the floor surface and the pedal.

Clutch driven disc

Wear limit form the friction surface to the rivet head	0.3mm
Effective thickness of the friction lining	1.2mm(Nominal size)

Clutch pressure plate

Diaphragm spring height: 41-43mm

https://truckmanualshub.com/

Transmission

MT

TOC

Technical Performance Overview MT-1
Service and Maintenance Notes for Transmission MT-1
Trouble and Troubleshooting MT-1
Disassembling Procedures and Notes for Transmission Assembly MT-2
Check and Repair MT-11
Reassembling Procedures and Notes for Transmission Assembly MT-13

Transmission

Technical Performance Overview

Structure pattern

The 17G1A8-25 transmission is a mechanically manual transmission with 5 forward speeds and 1 reverse speed. All the forward speeds are synchromeshed. 5th speed is overdrive gear. All of them apply skew cylindrical gear engagement and the gear shifting is smooth.

Gear ratio

1st speed	2nd speed	3rd speed	4th speed	5th speed	Reverse speed
5.016	2.672	1.585	1.000	0.77	4.783

Odometer ratio:14/4.

lubricating oil

Brand: Manual transmission oil LAN-1 85W/90 or engine oil SAE 5W-30.

Oil volume: 2.7L

Service and Maintenance Notes for Transmission

1.Add lubricating oil as specified before mounting the transmission on the vehicle.

2.During shifting operation, depress the clutch pedal to the bottom. Before shifting into the reverse speed, stop the vehicle completely.

3.When crossing a river or operating in mud, prevent water form entering into the transmission. Otherwise, oil must be replaced.

4.The Service and maintenance of transmission shall follow the service and maintenance instructions for light-duty vehicles. Replace the lubricating oil of transmission periodically. When replacing the oil, loosen the oil drain plug at the lower part of transmission housing. After draining the oil in the housing, tighten the oil drain plug. Fill the lubricating oil into the transmission through the filling plug port on transmission shifting cover until it reaches the lower edge of filler port.

Trouble and Troubleshooting

Trouble	Phenomenon	Probable case	Judgement &Trouble shooting
Disengagement	1.The transmission shifts into neutral automatically during driving.	1.Wear of fork shaft circular groove and interlock pin, plastic deformation of lock ball spring. 2.Wear of fork working surface. 3.Wear of connecting cone for synchronizer toothed ring and gear sleeve. 4.Axial looseness of gear.	1. Check the operating system to see whether the shifter rock arm of transmission is pushed in position, or dismount the transmission cover and push the fork by hand to engage the gear, check the engagement condition. 2. If not completely engaged,check the fork for deformation or overwear of working suface. 3. If the gear sleeve is completely engaged, check the gear sleeve and the back taper part of connecting tooth for wear. 4. If the clearance is too large when stirring the fork, check the fork shaft groove to see whether the locating spring is worn or faulty. 5. Check the 2nd shaft nut of tightening flange for looseness, if so, the axial position of 2nd shaft gear will change.

Trouble	Phenomenon	Probable case	Judgement &Trouble shooting
The gear couldn't be engaged properly.	1.Without the failure of clutch,shifting is difficult with serious pound or disengagement at some gear is hard.	1.Severe wear of interlock pin. 2.The fork head of internal speed selective rocker arm is sevrely worn or damaged, or separate from shifter small rocker arm groove.	1.Check the faulty area and remove the failure.
Noise	1.Regular pound 2.Even noise.	1.Some individual gear and tooth is broken. 2.Gear clearance is increased or gear is damaged. 3.Bearing is worn. 4.Lubricating oil is not sufficient.	1.Disassemble,inspect, clean or replace damaged gear or bearing. 2.Replace or add oil.

Disassembling Procedures and Notes for Transmission Assembly

Disassembling procedures of transmission from the vehicle

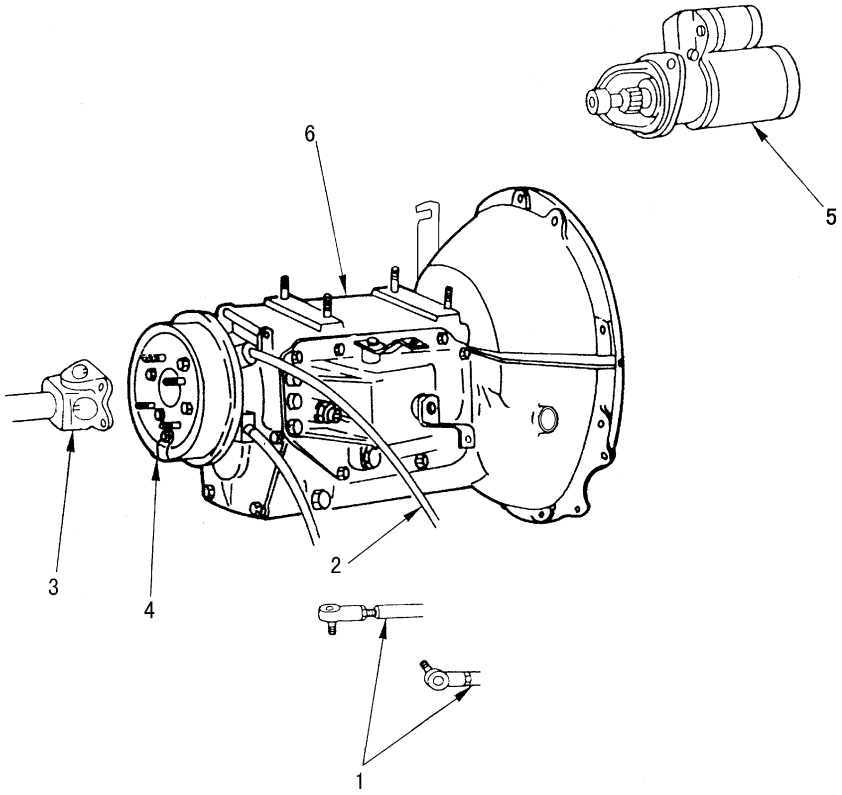

Disassembling sequence:

1.Operating flexible shaft

2.Odometer driveing flexible shaft

3.Drive shaft

4.Parking brake assembly

5.Starting motor

6.Transmission assembly

Disassembling sequence and notes for transmission

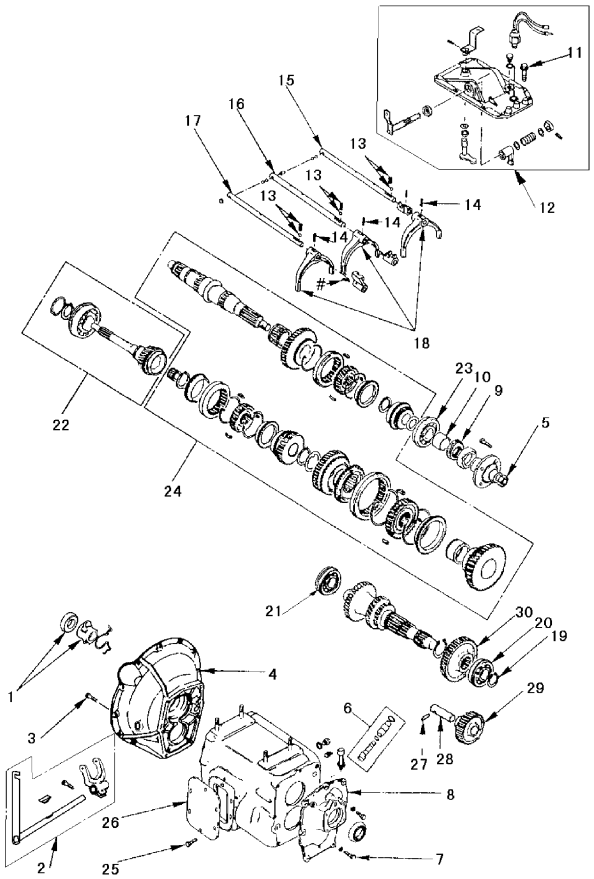

Disassembling sequence:

1.Clutch release bearing assembly

2.Clutch release fork shaft and release fork arm assembly

3.Clutch case connecting bolt, 9.8 grade

4.Clutch case

5.2nd shaft nut

6.Odometer flexible shaft sleeve sets

7.Connecting bolt, 9.8 grade

8.Rear cover

9.Odometer drive gear

10.Distance sleeve

11.Connecting bolt, 9.8 grade

12.Cover assembly

13.Self-locking spring and steel ball

Take off 3 self-olcking springs and 3 self-lock steel balls from the transmission housing.

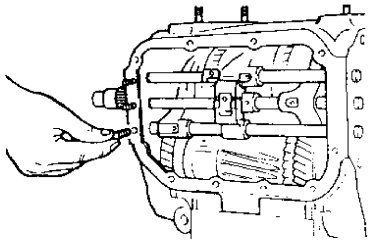

14.Elastic pin sets

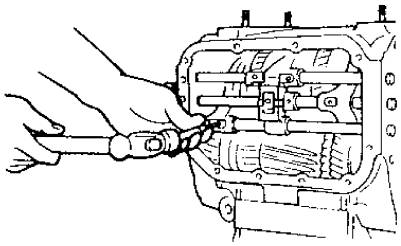

15.Fork shaft (reverse~5 speed)

Before disassembling, place all the fork shafts in neutral position. Push the rear end of rork shaft (reverse~5 speed) so that it moves forward. Then move the fork shaft backward to dismantle the shifting arm and shifting device.

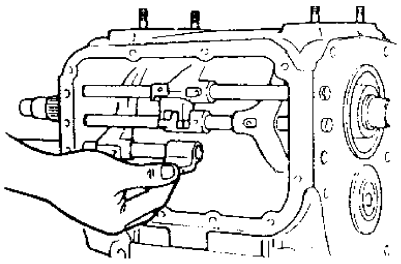

16.Fork shaft(3rd speed~4th speed)

Push the rear end of fork shaft so that it moves forward. Then move the fork shaft backward to dismantle the shifting arm and shifting device. Prevent the front-mounted interlock pin and steel ball from falling out.

Take out the inter lock pin from the front end of the fork shaft and then remove 2 steel balls from the transmission case. At this time, be careful not to mix or lose them.

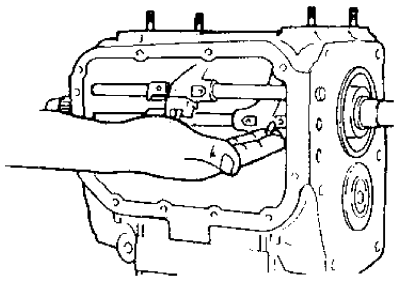

17.Fork shaft(1st speed~2nd speed)

Refer to the above for disassembling procedures. Take 2 setting steel balls from the transmission case. Be careful not to mix up or lose them.

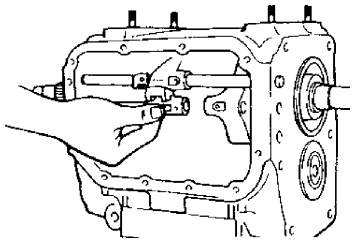

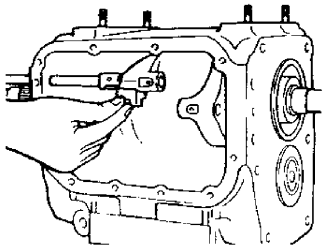

18.Shifter fork

19.Retainer ring(countershaft rear bearing)

20.Countershaft rear centripetal ball bearing

Strike the front end of countershaft with copper bar or hand hammer and move the countershaft backward 3mm.

Remove the retainer ring, place special tools into the ring groove and dismount the bearing.

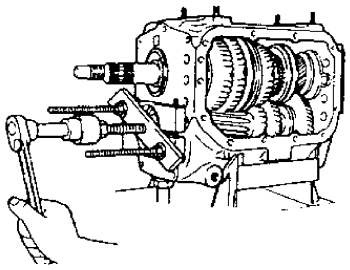

21.Countershaft front centripetal ball bearing

Strike the rear and of countershaft with copper hammer, move the countershaft forward 3mm. Place special tools into the ring groove and remove the bearing.

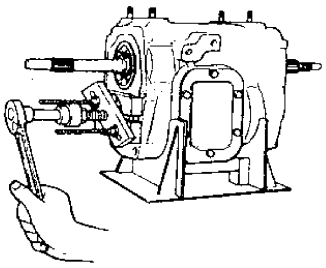

22.1st shaft

Hold an appropriate bar against the outer ring of 1st shaft bearing, and then strike the outer ring of bearing towards the front of transmission.

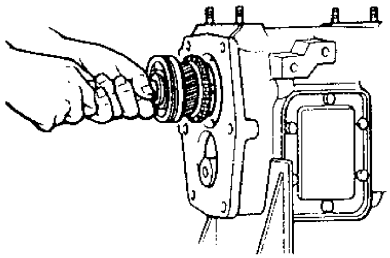

23.Centripetal ball bearing(rear of 2nd shaft)

Strike the front end of 2nd shaft with copper hammer and move the 2nd shaft backward 3mm. Put special tools into the ring groove and remove the bearing.

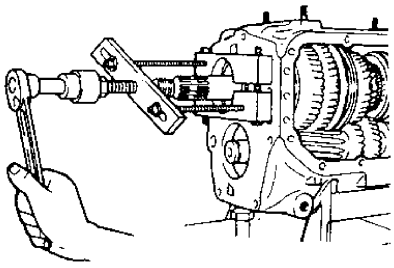

24.2nd shaft assembly

Take off the 2nd shaft assembly from the transmission case.

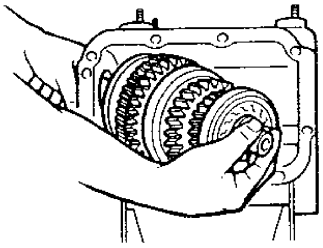

25.PTO coverplate bolt, 6.8 grade

26.PTO coverplate

27.Reverse shaft stop pin

After removing the PTO coverplate, take off the reverse shaft gear stop pin from the transmission case.

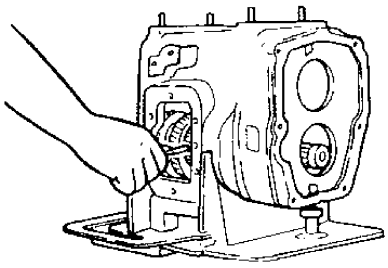

28.Reverse shaft

Knock the rear end of reverse shaft with an appropriate metal bar and strike it towards the interior of transmission case.

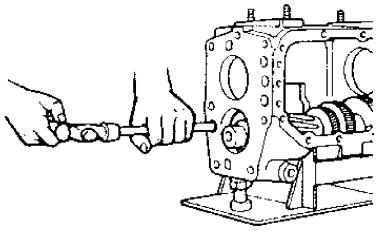

29.Reverse shaft gear assembly

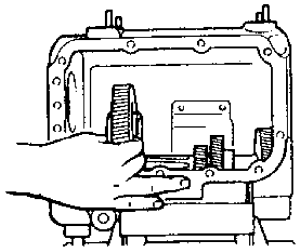

30.Counter shaft 5th speed gear

Remove the retainer ring and put it aside. Then remove the 5th speed gear of coun tershaft inward and take it out with the countershaft assembly.

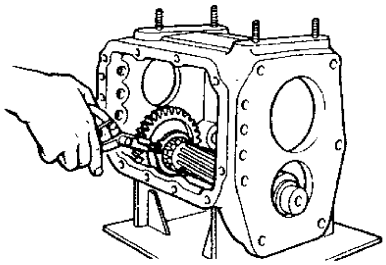

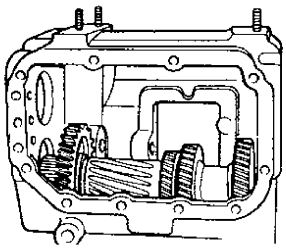

Disassembling scheme and notes for 2nd shaft assembly and 1st shaft assembly

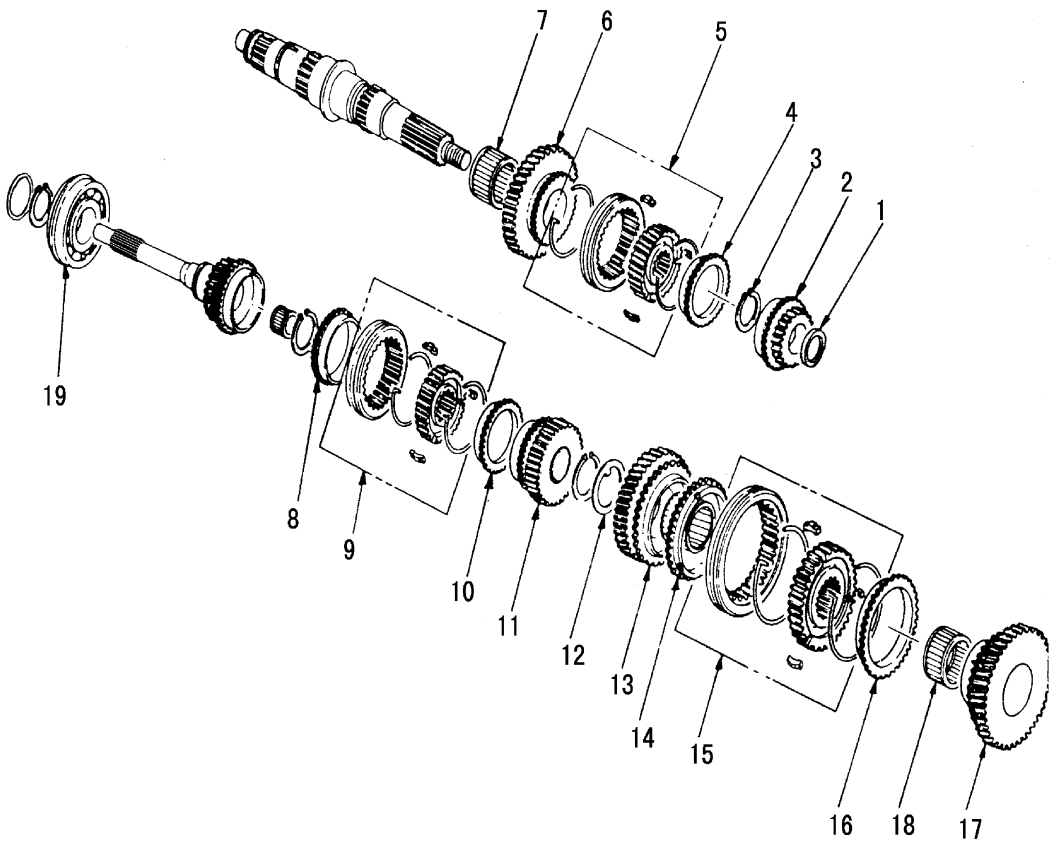

Disassembling sequence of 2nd shaft assembly and 1st shaft assembly

1.Thrust washer

2.2nd shaft 5th speed gear

3.Retainer ring

4.Synchronizer gear (5th speed)

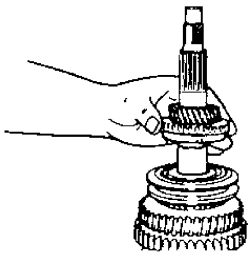

5.Synchronizer assembly(reverse~5th speed)

Remove the retainer ring and the synchronizer assembly,and then dismount the synchronizer spring,synchronizer gear sleeve,sliding block and synchronizer gear hub.

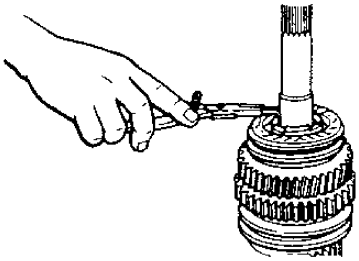

Notes:
As the dimension of each retainer ring matches the clearance of synchronizer gear hub respectively,do not mix the disassembled retainer rings.

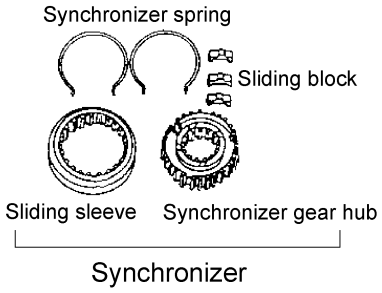

6.2nd shaft reverse gear

7.Needle bearing(reverse)

8.Synchronizer gear ring(4th speed)

9.Synchronizer assembly (3rd speed~4th speed)

Tighten the 2nd shaft with its front end upwards,remove the retainer ring, synchronizer gear ring and synchronizer assembly (3rd speed~4th speed).

Notes:
The disassembled retainer rings couldn't be mixed.

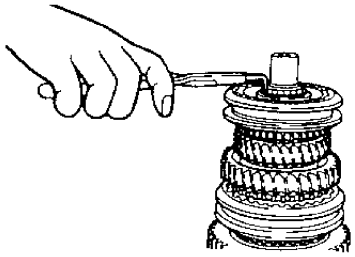

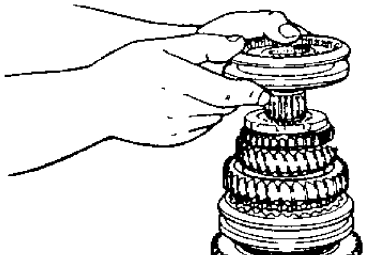

10.Synchronizer gear ring (3rd speed)

11.2nd shaft 3rd speed gear and needle bearing

12.Retainer ring and thrust washer

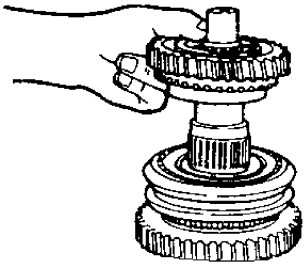

13.2nd shaft 2nd speed gear and needle bearing(2nd speed)

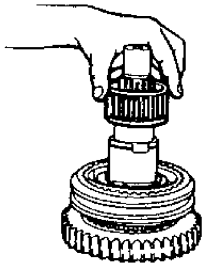

14.Synchronizer gear ring(2nd speed)

15.Synchronizer assembly(1st speed~2nd speed)

Remove the retainer ring and synchronizer assembly(1st speed~2nd speed)

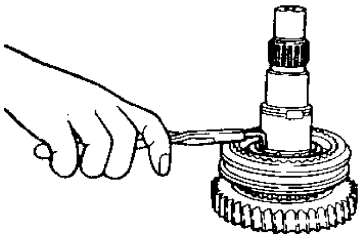

Notes:
The disassembled retainer rings couldn't be mixed.

16.Synchronizer gear ring(1st speed)

17.2nd shaft 1st speed gear

18.Needle bearing(1st speed)

19.1st shaft centripetal ball bearing

When disassembling, use bench press.

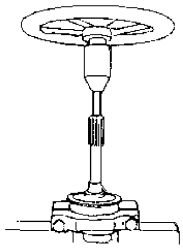

Disassembling sequence for transmission shifter cover assembly

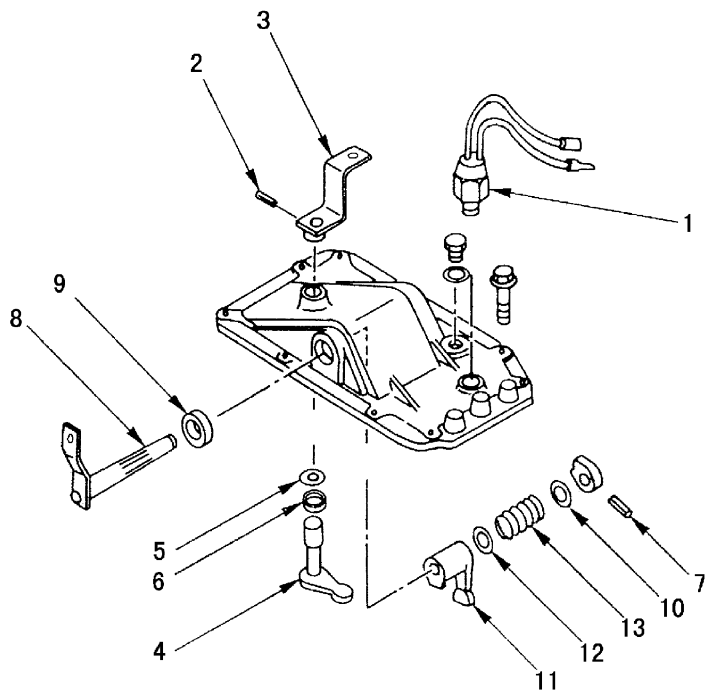

Disassembling sequence:

1.Backing lightswitch

2.Elastic pin sets

3.Speed selective shaft external rocker arm sets

4.Speed selective shaft sets

5.Speed selective shaft adjusting shim

6.Oil seal

7.Elastic pin

8.Speed selective shaft sets

9.Oil seal

10.Flat washer

11.Speed selective shaft internal rocker arm

12.Flat washer

13.Shifting shaft reverse limit spring

Check and Repair

If wear of part, damage of part or other fault is found through inspection, repair or replace it.

1.Thickness of shifter fork(mm)

Standard	Limit
10.0	9.0

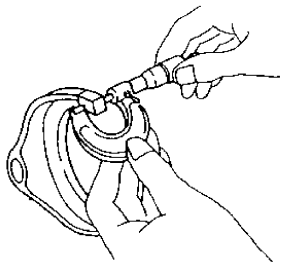

2.Free length of self-locking spring(mm)

Standard	Limit
31.6	30.1

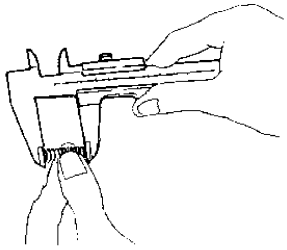

3.Clearance between,synchronizer gear ring and the end face of joint tooth (mm)

	Standard	Limit
3rd, 4th speed	1.0	0.5
1st, 2nd, 5th speed	1.5	0.5

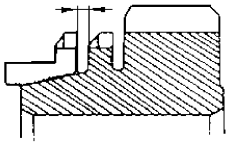

4.Clearance between synchronizer gear ring and sliding block(mm)

	Standard
2nd, 3rd, 4th, 5th speed	4.34~4.66
1st speed	4.84~5.16

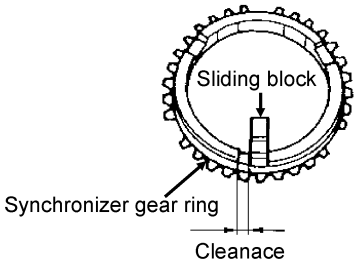

5.Clearance between synchronizer gear hub and sliding block(mm)

Standard	0.09~0.31

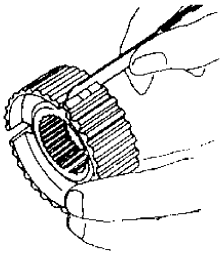

6.2nd shaft radial runout(mm)

Limit	0.1

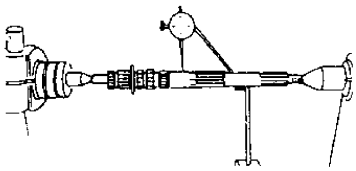

7.Clearance between gear orifice and 2nd shaft(mm)

	Standard	Limit
5th speed	0.05~0.08	0.2

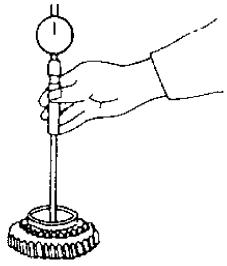

8.Clearance between the liner and reverse gear shaft(mm)

Standard	Limit
0.04~0.08	0.2

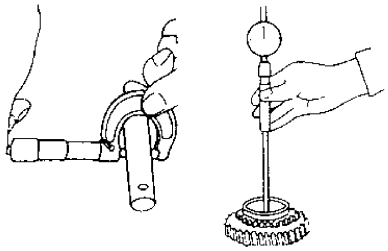

9.Radial runout of centripetal ball(mm)

Limit	0.2

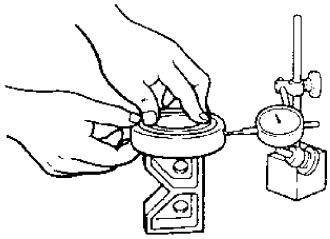

Reassembling Procedures and Notes for Transmission Assembly

Reassembling of 1st shaft and 2nd shaft assembly as showed in the figure

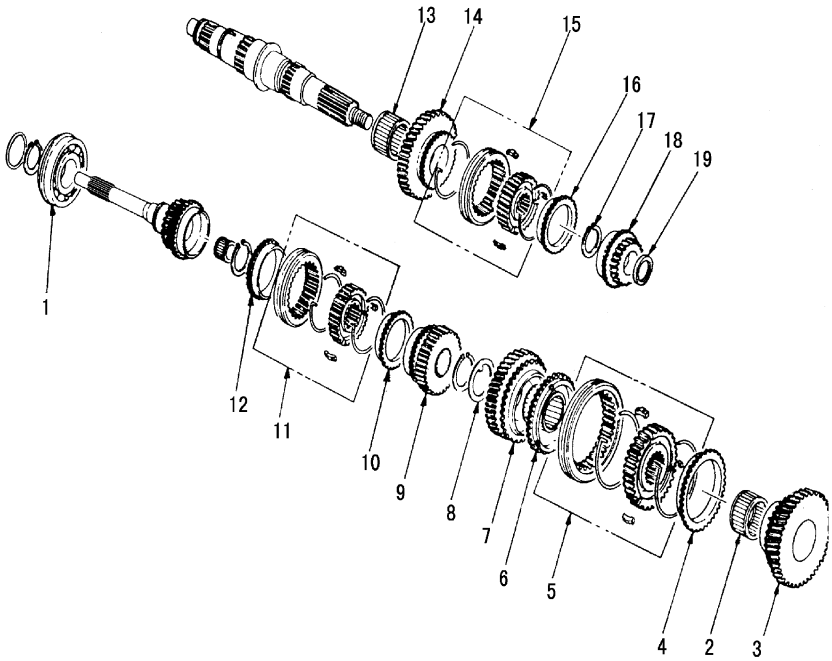

Assembling sequence:

1.1st shaft centripetal ball bearing

Use bench press when assembling.

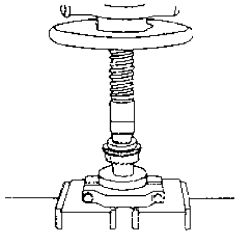

2.Needle bearing(1st speed)

3.2nd shaft 1st speed gear

4.Synchronizer gear collar(1st~2nd speed)

5.Synchronizer assembly (1st~2nd speed)

Mount it non-directional,select and fit the thickest snap ring

Provided thickness(mm)	1.75	1.825	1.875

Non-direction

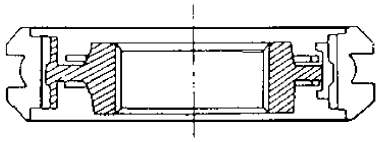

6.Synchronizer gear ring(1st~2nd speed)

7.2nd shaft 2nd speed gear

8.Thrust washer and retainer ring

After assembling,measure the distance X and select the fittest retainer ring from the table below.

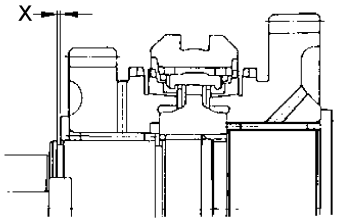

Distance X	Retainer ring thickness(mm)
2.20~2.27	1.875
2.27~2.32	1.925
2.32~2.37	1.975
2.37~2.43	2.025

9.2nd shaft 3rd speed gear and needle bearing(3rd speed)

10.Synchronizer gear ring (3rd~4th speed)

11.Synchronizer assembly(3rd~4th speed)

The sliding block is non-directional, place the synchronizer gear sleeve with its groove facing the 3rd speed gear and the synchronizer gear hub with its big end facing backward, select and mount the thickest retainer ring.

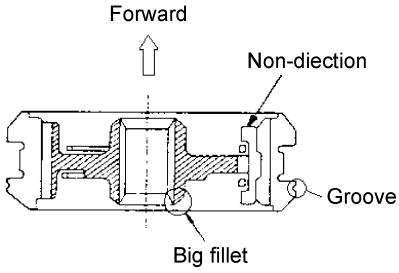

Provided thickness(mm)	1.775	1.825	1.875

12.Synchronizer gear ring(3rd~4th speed)

13.Needle bearing(reverse)

14.2nd shaft reverse gear

15.Synchronizer assembly(reverse~5th speed)

The synchronizer gear hub face with bigger basal plane must face the reverse gear (the front for transmission), select and fit the thickest retainer ring.

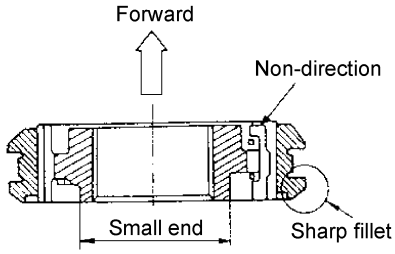

Provided thickness(mm)	1.775	1.825	1.875

16.Synchronizer gear ring(5th speed)

17.Retainer ring

18.2nd shaft 5th speed gear assembly

19.Thrust washer

Reassembling of shifter cover assembly

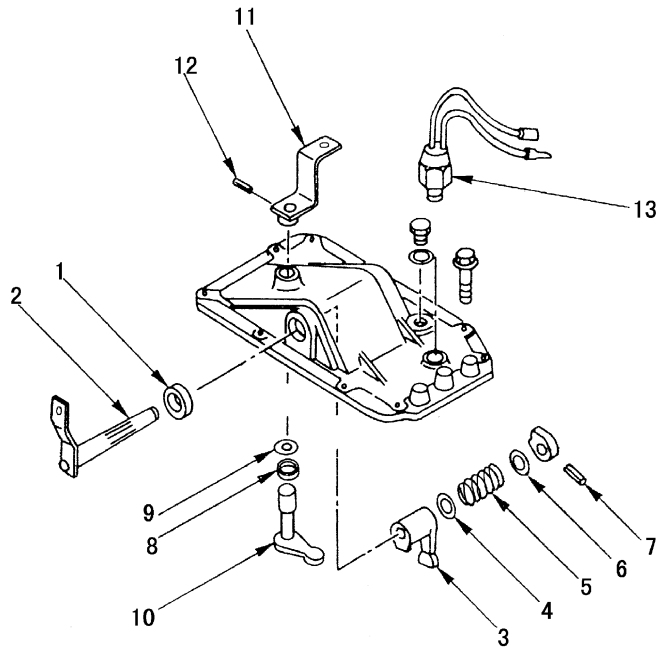

Assembling sequence:

1.Oil seal

2.Speed selective shaft sets

3.Speed selective shaft internal rocker arm

4.Flat washer

5.Speed selective shaft reverse stop spring

6.Flat wasger

7.Elastic pin

8.Oil seal

9.Flat washer

10.Speed selective shaft sets

11.Speed selective shaft external rocker arm sets

12.Elastic pin sets

13.Backing light switch

Reassembling and specifications for transmission assembly

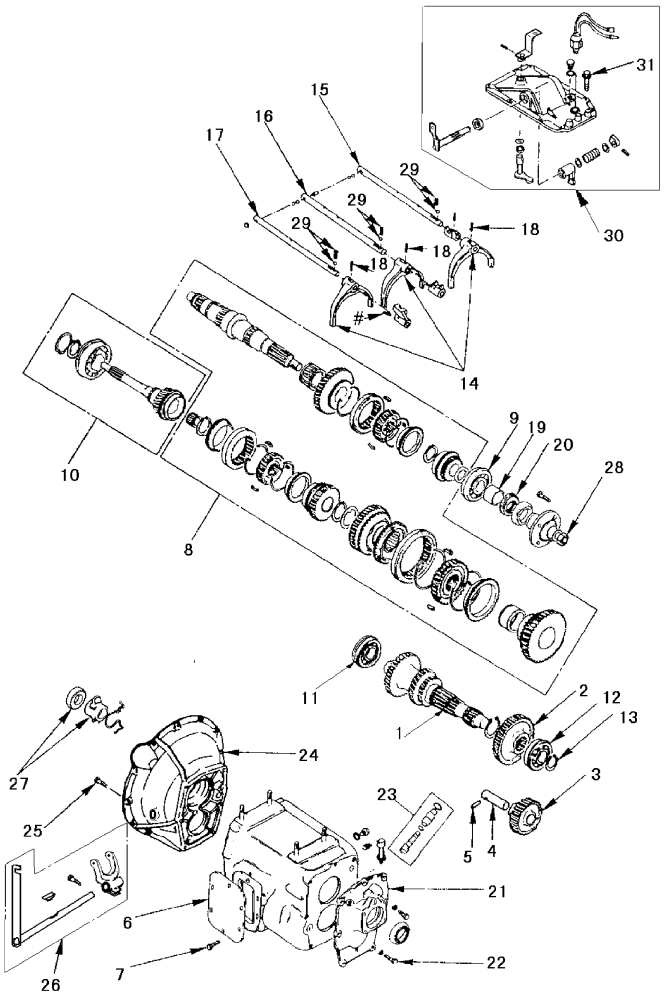

Assembling sequence:

1.Countershaft

2.Countershaft 5th speed gear

Put the countershaft assembly and 5th speed gear together and mount them into the case with the 5th speed gear close to the rear end.

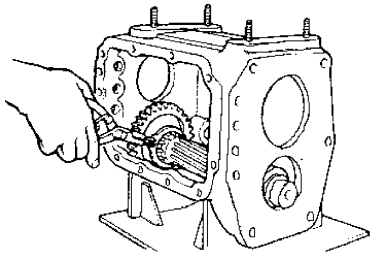

3.Reverse shaft gear assembly

When assembling, be sure that the longer end of reverse shaft gear hub faces forward, and then insert the reverse shaft pin.

4.Reverse shaft

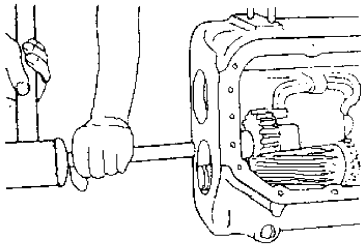

5.Reverse shaft stop pin

6.PTO Coverplate

7.Connecting bolt, 6.8 grade

8.2nd shaft assembly

9.Centripetal ball bearing(the rear of 2nd shaft)

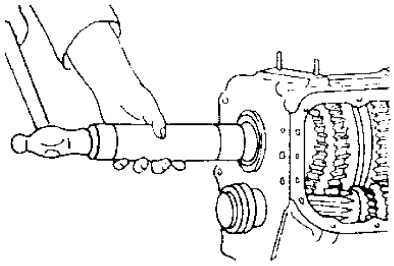

10.1st shaft assembly

First measure the distance x between the front end face of synchronizer gear hub(3rd speed~4th speed) and the front end face of housing.

When the value of X is less than 53.85mm, mount 1st shaft centripetal ball bearing first, then install 1st shaft shim and retainer ring in sequence.

When the value of X is more than 53.85, first mount the shim, press 1st shaft centripetal ball bearing and then fit the retainer ring.

Apply lithium grease into the gear ring of 1st shaft and fit the 1st shaft assembly into the transmission case. Then check whether the sliding block of synchronizer assembly (3rd speed~4th speed) is inserted into.

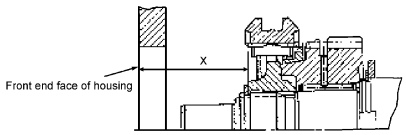

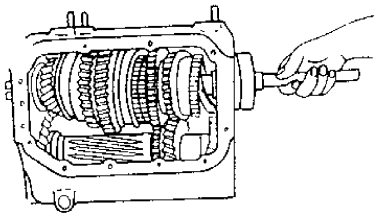

11.Countershaft front centripetal ball bearing

12..Countershaft rear centripetal ball bearing

13.Retainer ring

14.Shifter fork

15.Shifter fork shaft (1st speed~2nd speed)

16.Shifter fork shaft (3rd speed~4th speed)

17.Shifter fork shaft (reverse~5th speed)

Before assembling, place the shifter fork shaft in neutral position. Mount 2 steel balls on the position between 1st~2nd speed shifter fork shaft and 3rd~4th speed shifter fork shaft.

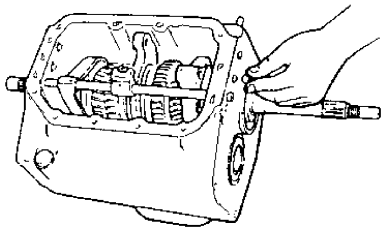

Insert the interlock pin into 3rd~4th speed shifter fork shaft.

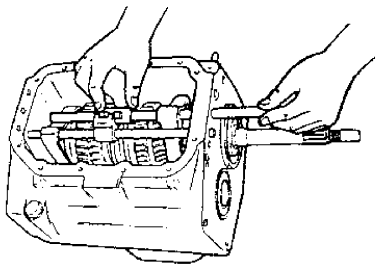

Mount 2 steel balls on the position between 3rd~4th shifter fork shaft and reverse~5th speed shifter fork shaft.

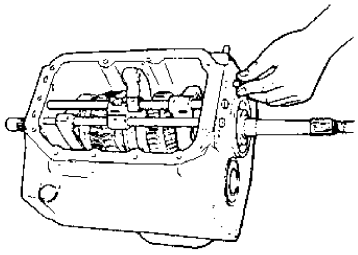

18.Elastic pin sets

Never use second-hand elastic pin, replace with new elastic pin. When assembling, align the slot line.

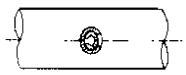

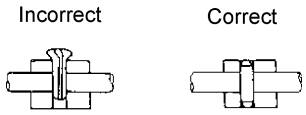

19.Distance sleeve

20.Odometer drive gear

21.Speed selective shaft rear cover assembly

Apply seal gum to the joint face of rear cover,the gum track must be continuous.

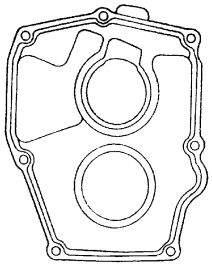

22.Connecting bolt, 9.8 grade

23.Odometer shaft sleeve and odometer driven gear

24.Clutch case assembly

Apply seal gum on the joint face of clutch case, the gum track must be continuous .

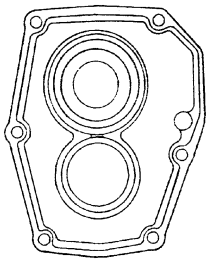

25.Clutch case connecting bolt, 10.9 grade

26.Ball-end supporter

27.Release fork and dust cover

28.Clutch release bearing assembly

29.2nd shaft nut

30.Self-locking spring and steel ball

31.Shifter cover assembly

32.Connecting bolt, 9.8 grade

Tightening torque value of each connecting bolt during reassembling

Position	Torque (N.m)
Connection between backing light switch and shifter cover	29~39
Connection between filler plug and transmission cover	39~59
Connection between drain plug and transmission cover	39~59
Connection between PTO coverplate and transmission case	10~25
Connection between odometer shaft sleeve and rear cover	11~19
Connection between shifter cover and transmission case	15~25
Connection between 2nd shaft nut transmission case	147~196
Connection between clutch case and transmission case	69~93
Connection between rear cover and transmission case	15~25

https://truckmanualshub.com/

Front Suspension

FA

TOC

Notice & Preparation FA-1
Front Suspension FA-2
Driving Inspection and Repair FA-3
Front Axle FA-9
Hub & Brake Disc FA-10
Steering Knuckle FA-14
Front Independent Suspension FA-16
Maintenance Data & Explanation FA-25

https://truckmanualshub.com/

Notice

When assembling the rubber part, the vehicle must be in curb weight, and the rubber part has to be screwed down after the wheels touched down the ground.

Curb weight: the vehicle equipped with full fuel, coolant, oil, and spare tyre, jack, service tools, and parked on the level ground.

Use tool to disassemble and assemble hub.

When disassembling the suspension part, check the wheel alignment and adjust it if necessary.

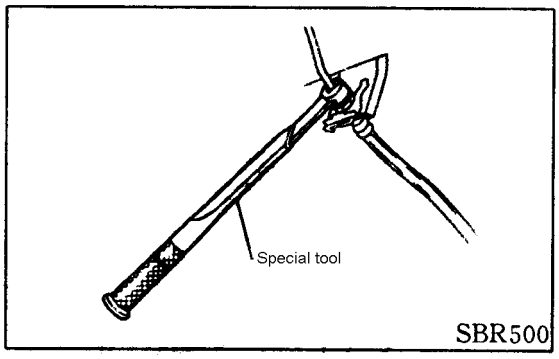

Preparation

Special tools

Tool name	Description
Extractor	To disassemble the connecting part between ball head pin and steering kunckle
Ball head pin replacer	Disassemble the ball head connection of tie-rod and drag link. 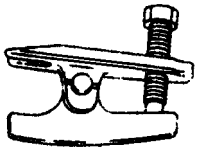
Bearing punch	Assemble the hub bearing. 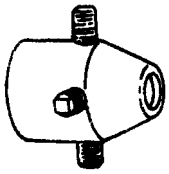
Wheel bearing nut wrench	Disassemble and assemble bearing nut 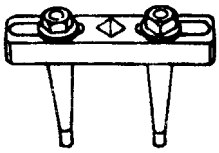

https://truckmanualshub.com/

Front Suspension

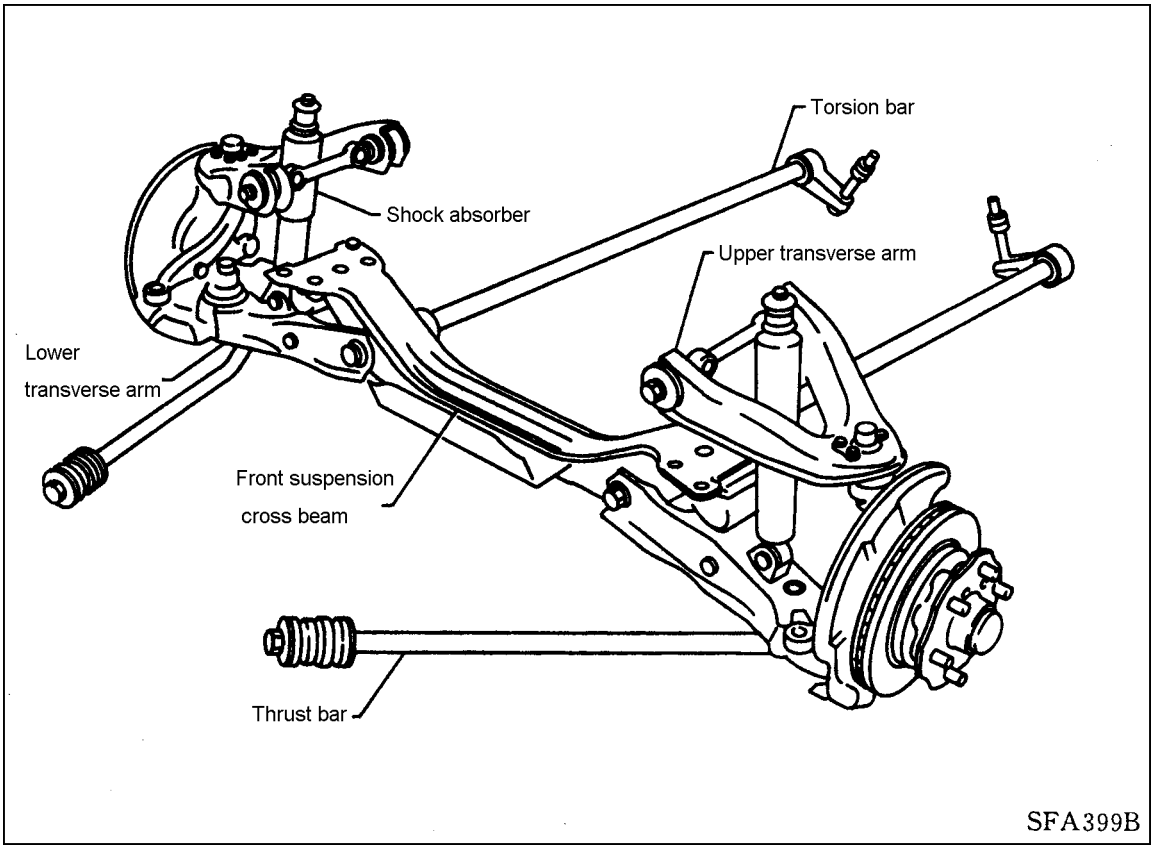

https://truckmanualshub.com/

Riding Inspection and Repair

Note:

When assembling the rubber part, the vehicle must be in curb weight, and the rubber part has to be screwed down after the wheels touched down the ground.

Curb weight: the vehicle equipped with full fuel, coolant, oil, and spare tyre, jack, service tools, and parked on the level ground.

When disassembling the suspension parts, please don't squash by the related parts.

Front suspension part

Check the front suspension for loose, crack, wear or other damages.

(1) Shake front wheel.

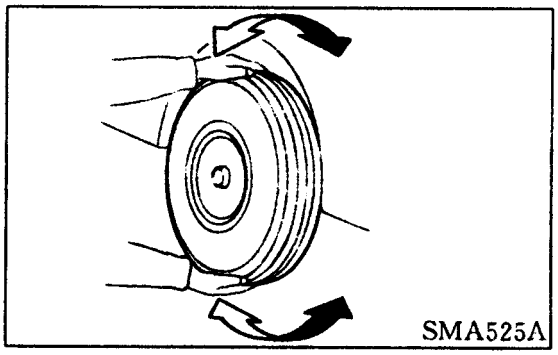

(2) Confirm that the cotter pin is in ggod condition .

(3) Screw down all bolts and nuts again to the required torque.

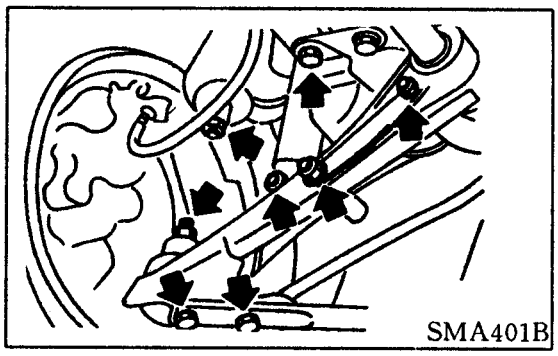

Check the shock absorber for any leakage or damage.

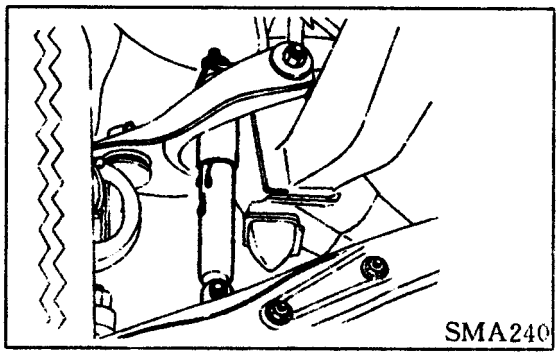

Chck the upper and lower transverse arm ball head dust proof for any damage, crack, or loose.

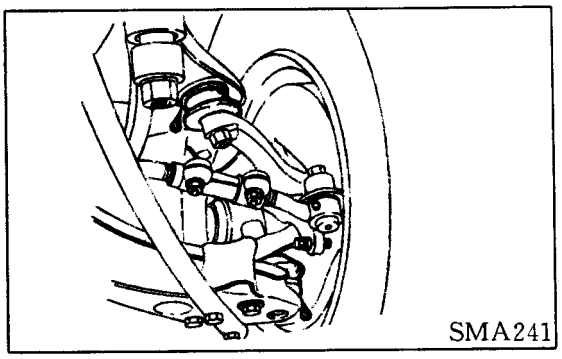

Warning:

If any of the above situation has happened, replace the ball head pin in time and forbidden to drive the vehicle. Otherwise, it may cause accident.

Check the vertical clearance of the ball head.

Upper ball head clearance ≤ 1.6mm

(1) Lift the front part of the vehicle and set a footstep.

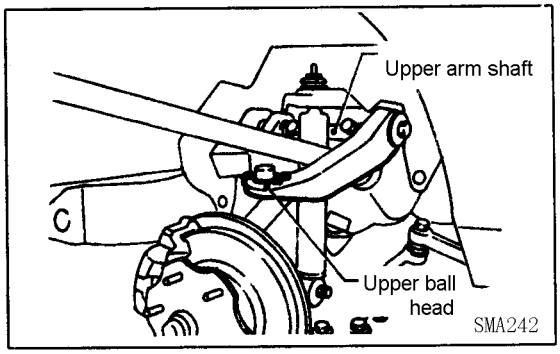

(2) Fix the dial gauge to the tie rod and set the contact of the dial gauge to the lower edge of the brake caliper.

(3) Make sure that the front wheel is in the straight driving line and the brake pedal has been pressed down.

(4) Insert a crowbar between the tie rod and wheel inner felloe.

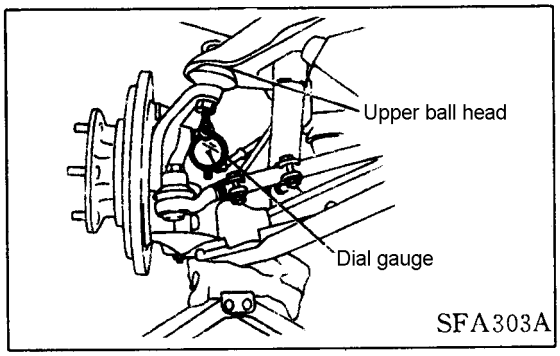

(5) At the time of pressing the crowbar, observe the Max. read of the dial gauge.

(6) If the ball head motion clearance is beyond the required value, disassemble the ball head and check, and replace it if necessary.

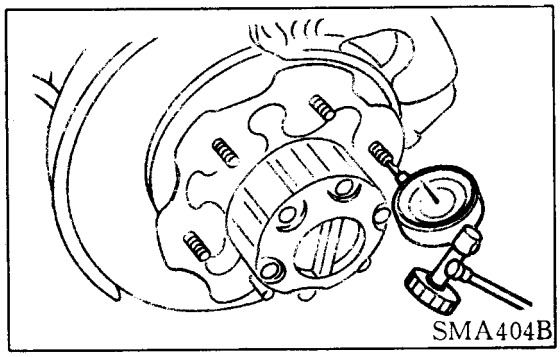

Front wheel bearing

Check the wheel bearing for smooth operating.

Check the shaft end clearance.

It is forbidden to have clearance in the shaft end.

If the shaft end has clearance or the bearing operates unsmoothed, adjust the bearing pretightening force.

As for the front wheel bearing pretightening force adjustment, please take the reference of other chapter.

Front wheel alignment

Before check the front wheel alignment, do the following primary inspection.

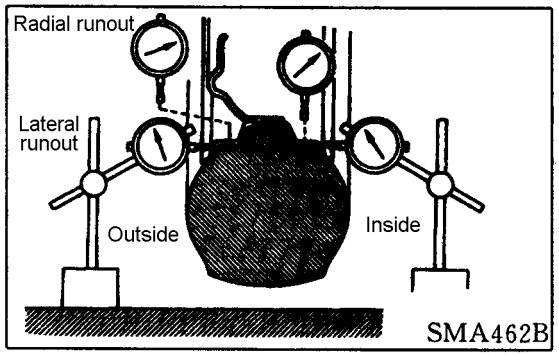

Primary inspection

1.Check the tyre for wear, and the tyre pressure. (standard pressure: 530kPa)

2.Check the inside and outside radial runout of the wheel assembly.

(Outside radial runout value + inside radial runout value) × 0.5：

Radial runout limit value: 0.8mm

Lateral runout limit value: 0.8mm

3.Check the front wheel bearing for looseness.

4.Check the front suspension for looseness.

5.Check the steering pull rod for looseness.

6.Use the standard vibration to test the shock absorber for normal work.

7.Measure the vehicle gesture (no load): =A-B mm

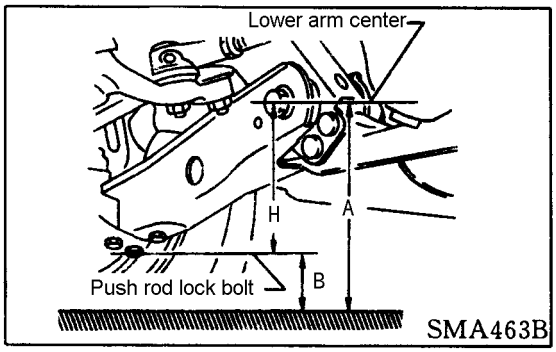

Reference to "Maintenance data & explanation"

(1) Shock the front part of the vehicle for 4~5 times to make the front suspension do the relative motion to confirm the correct vehicle gesture.

(2) Measure the wheel alignment.

See "Wheel alignment" of "Maintenance data & explanation".

(3) If the wheel alignment is not the same as the required value, adjust the vehicle gesture.

See "Wheel alignment" of "Maintenance data & explanation".

(4) Adjust the wheel alignment.

See "Wheel alignment" of "Maintenance data & explanation".

Wheel camber, caster, and king pin inclination

Before check the wheel camber, caster and king pin inclination, set the front wheel alignment test device under the wheel, then make the vehicle shock up and down for several times to limit the friction force, and make sure the vehicle gesture is correct.

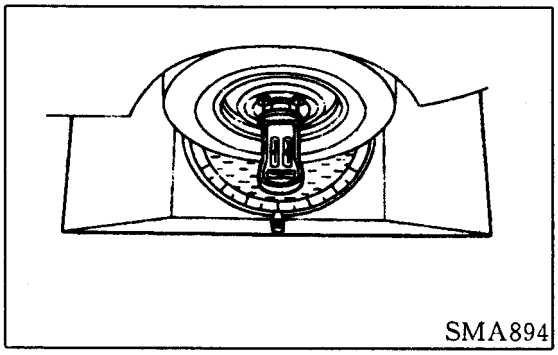

https://truckmanualshub.com/

After the test, if it is necessary to adjust the angle, please follow the steps below:

First, check the upper and lower ball head pin for wear and looseness, the hub bearing for looseness, and the steering kunckle for deformation.

Wheel camber (zero load)

See "maintenance data & explanation" for reference.

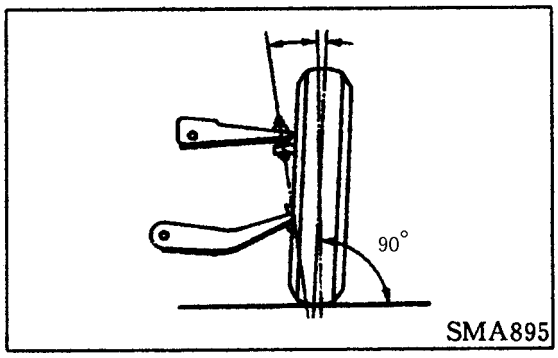

King pin inclination (zero load)

See "maintenance data & explanation" for reference.

Caster (zero load)

See "maintenance data & explanation" for reference.

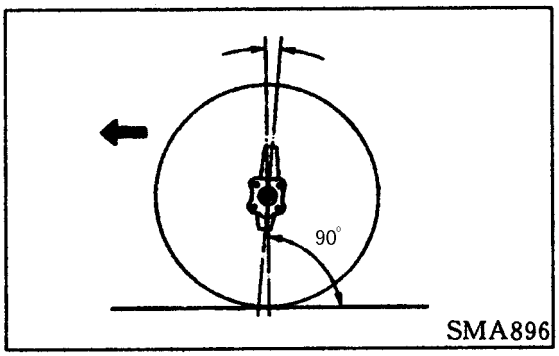

Adjustment

The change of the wheel camber and caster is through increase or decrease the ajusting spacer between shock absorber and upper transverse arm shaft.

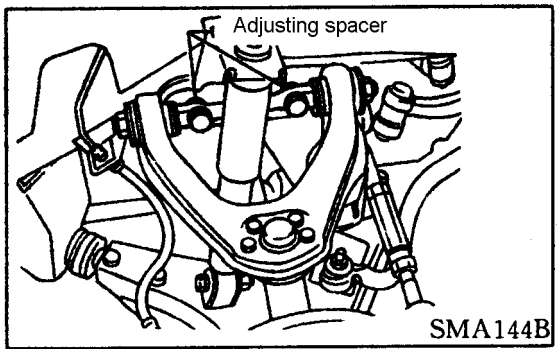

Before increase or decrease the adjusting spacer, lift the lower transverse arm by the jack.

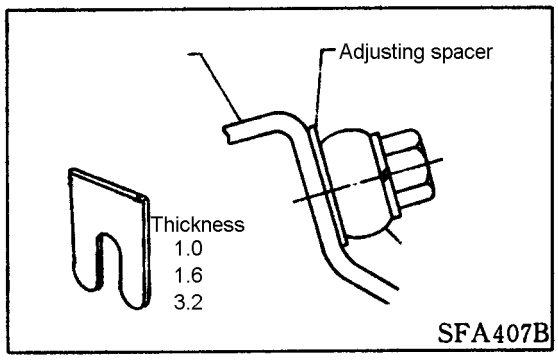

Thickness of the adjusting spacer: 1.0mm, 1.6mm, 3.2mm

Don't use more than 3 spacers in the same place.

When assemble the spacer, insert from top to bottom.

The total thickness of the spacer should not be more than 9.6mm.

The thickness difference of the same side of the front and rear end should not be more than 4.8mm.

Follow the below steps to confirm the needed spacer thickness of adjusting wheel camber and caster:

1.Respectively increase the adjusting spacer of 1mm thickness at the same side, front and rear end, and then the wheel camber angle of this side will reduce 0°15′, while the caster will not change.

2.If the front end is 1mm more than the rear end adjusting spacer of the same side, the caster angle of this side will reduce 0°24′, while the camber angle will reduce 0°7′30¨.

3.If the front end is 1mm less than the rear end adjusting spacer of the same side, the caster angle of this side will increase 0°24′, while the camber angle will increase 0°7′30¨.

4.If the wheel alignment parameter is still incorrect after the adjustment of above, the frame has to be adjusted.

Toe-in

1.Mark a reference line on the tyre, make the vehicle front part on the ground, and shock it up and down for several times to eliminate the clearance, and then set the steering wheel to the position of front straight driving.

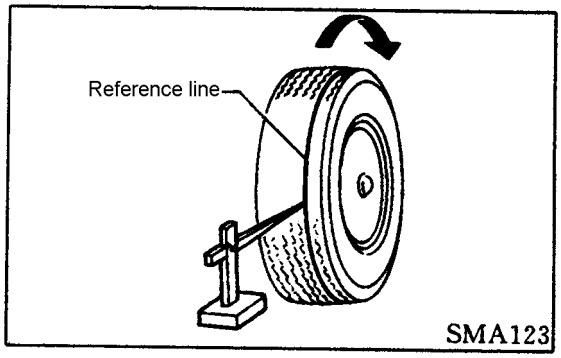

2.Measure the toe in

Measure A and B at the wheel midline, in the same height.

Toe in value:

See "maintenance data & explanation" for reference.

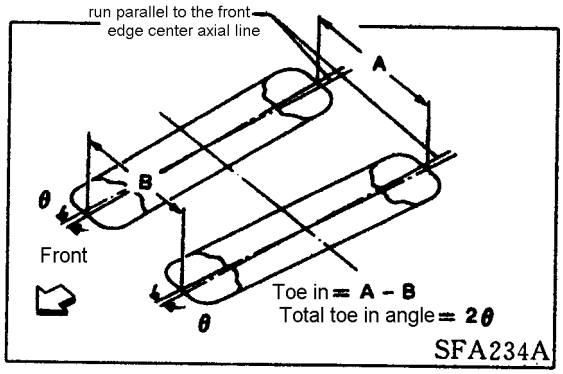

3.Change the middle tie rod length to adjust the toe in.

(1) Loose the lock nut.

(2) Turn the left and right joint of the same degree to adjust the toe in.

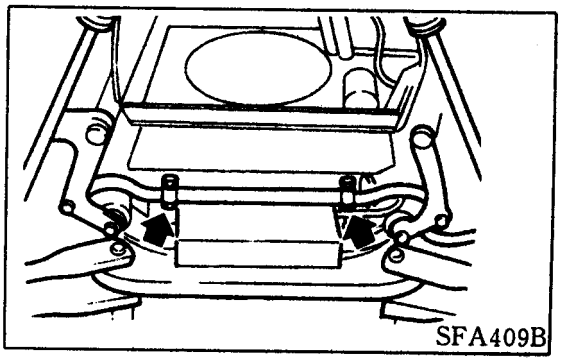

https://truckmanualshub.com/

Make sure that the middle tie rod has less than 35mm length turned into the left and right joint, this is to assure the same length of the middle tie rod left an right joint.

(3) Use the moment wrench to tighten the lock nut to the required value.

Tightening torque:25~28N.m。

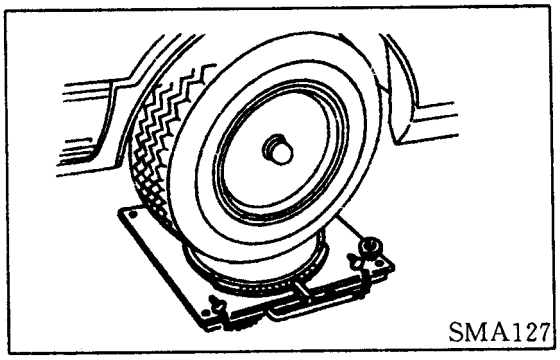

Front wheel turning angle

1.Turn the front wheel to the front, move the vehicle ahead to set the front wheel on the turning angle test device.

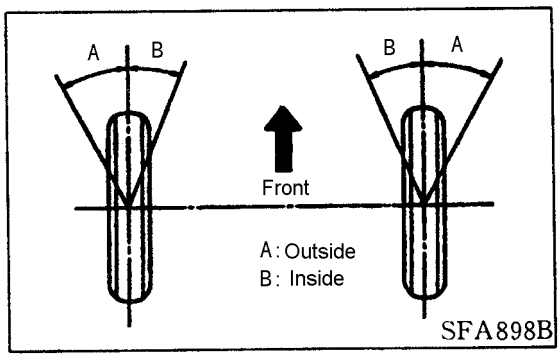

2.Turn the steering wheel left and right to the turning limit to measure the wheel turning angle.

Wheel turning angle: See "maintenance data & explanation" for reference

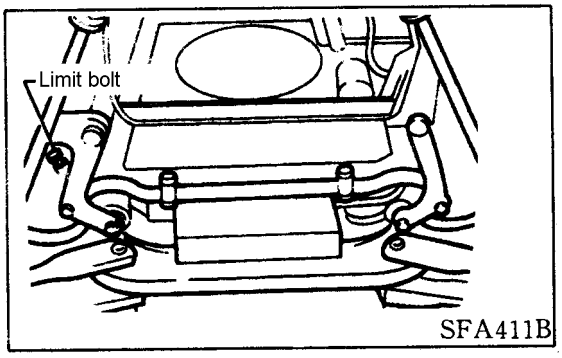

3.Adjust the front wheel turning angle by the limit bolt if necessary.

https://truckmanualshub.com/

Front Axle

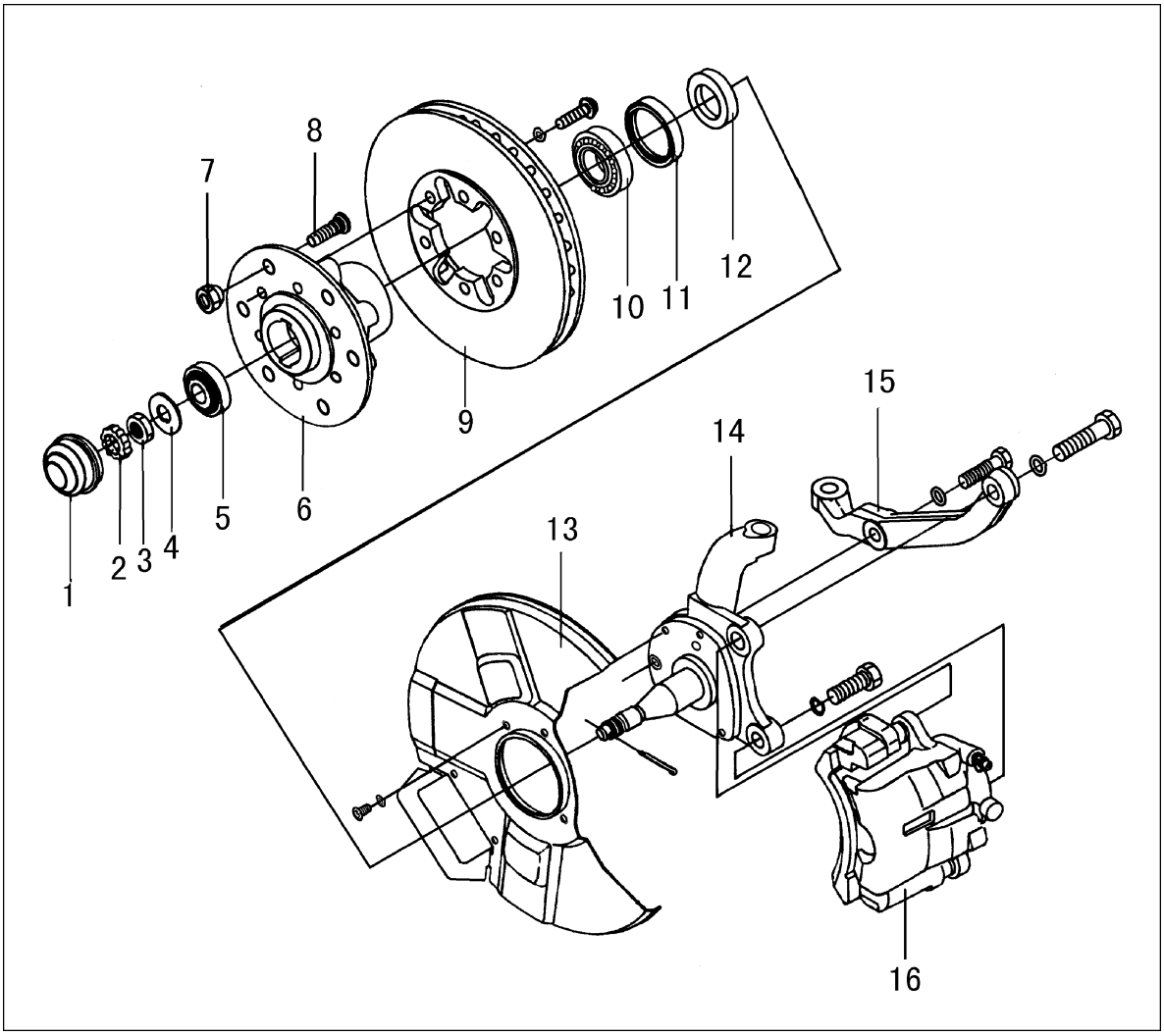

1.Front wheel hub cover
2.Retainer ring
3.Hex thin nut
4.Antifriction spcer--steering knuckle
5.Front wheel hub outer bearing assy
6.Front wheel hub
7.Wheel nut
8.Front wheel bolt
9.Brake disc
10.Front wheel hub inner bearing assy
11.Front wheel hub oil seal assy
12.Oil seal retainer
13.Left dustproof assy--front brake
14.Left steering knuckle
15.Left steering knuckle arm
16.Disc brake assy

https://truckmanualshub.com/

Hub & Brake Disc

Disassembly and assembly

Dismount the brake caliper assembly.

The brake pipe need not to be dismount from the brake caliper, and pay attention not to depress the brake pedal to avoid piston extruded.

Note:

Never distort the brake pipe.

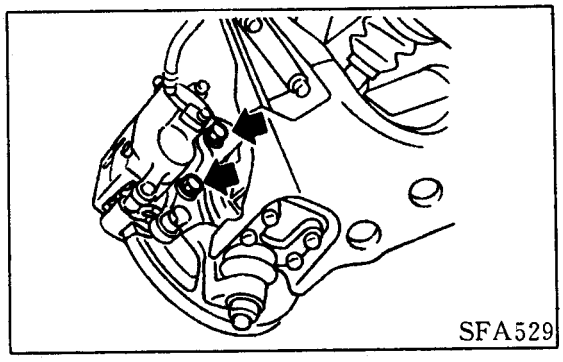

Dismount the lower hub cover, cotter pin and the adjusting spacer.

Dismount the hub bearing locking nut by proper tools.

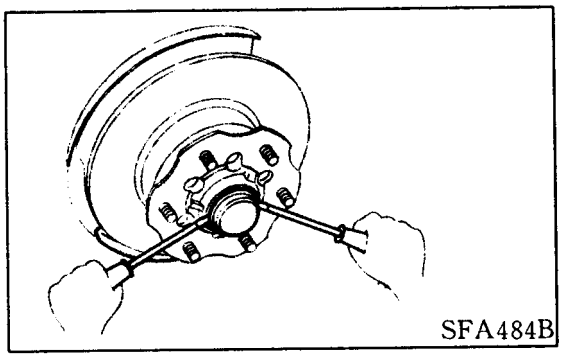

Remove the hub bearing from the steering knuckle shaft.

Note:

Never let the outer bearing out.

Dismount the tortion bar spring.

See chapter "Front suspension".

After assemble the hub and hub bearing, adjust the bearing pretightening force.

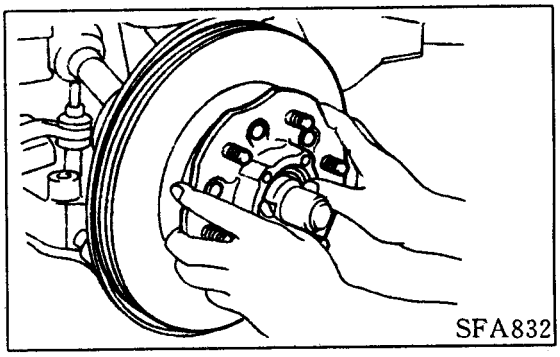

Pretightening force adjustment

After replace the hub bearing or hub, the bearing pretightening force has to be adjusted.

The adjusting method:

1.Before adjustment, clean all of the parts first.

2.Smear some lubricating grease on the following parts:

Rubbing surface of the steering knuckle shaft

Interface between outer bearing and locking washer.

Wheel hub cap

Grease sealing ring edge

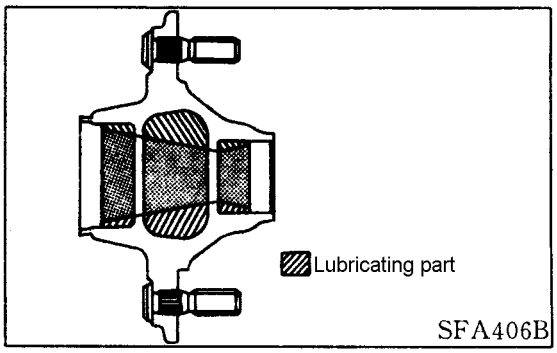

3.Tighten the bearing locking nut to the required torque: 34~39N.m

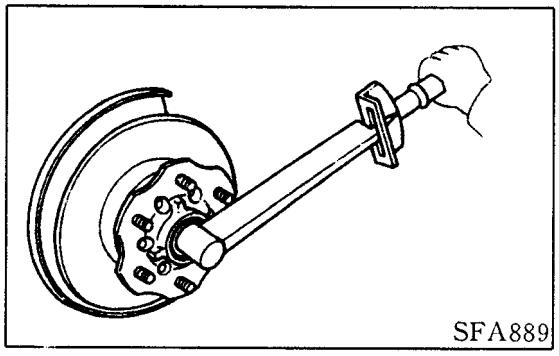

4.Turn the hub for several times to set the bearing in correct position.

5.Tighten the bearing locking nut again to the required torque: 34~39N.m

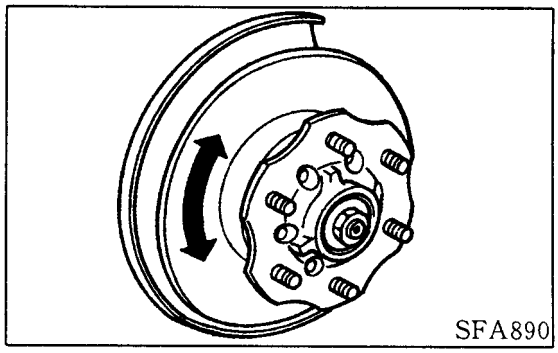

6.Back the locking nut for 45°.

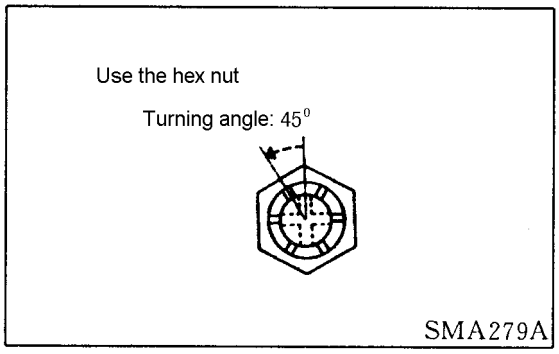

7.Install the adjusting cap and new cotter pin, and back the locking nut for 15° or less to install the cotter pin.

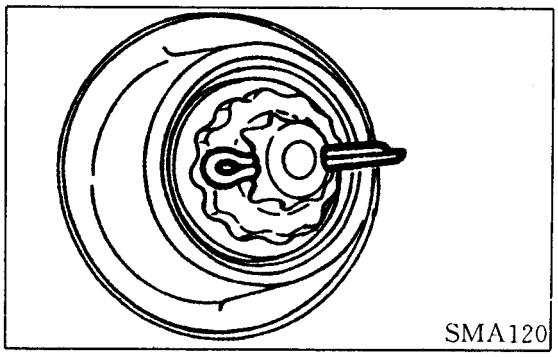

https://truckmanualshub.com/

8.Measure the wheel hub bearing tightening force and shaft end clearance.

Shaft end clearance: 0mm

Bearing tightening force(at the hub bolt):

Standard torque: 0.7~101N.m

Spring balance read: 9.8~27.5N

Repeat the above procedure until obtain the correct bearing tightening force.

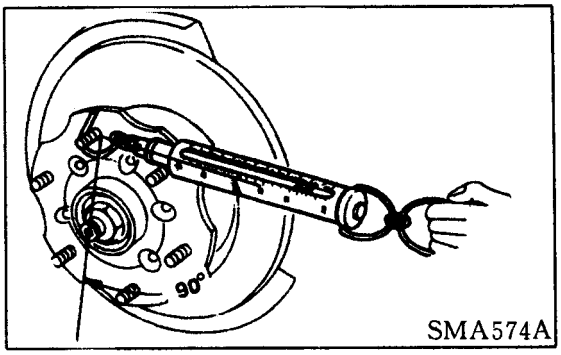

9.Bend the cotter pin.

10.Install the hub cover.

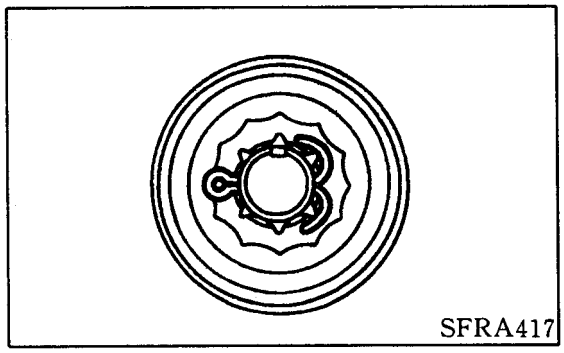

Disassemble

Disassemble the inner oil seal.

Use a propper copper bar to disassemble the bearing outer ring.

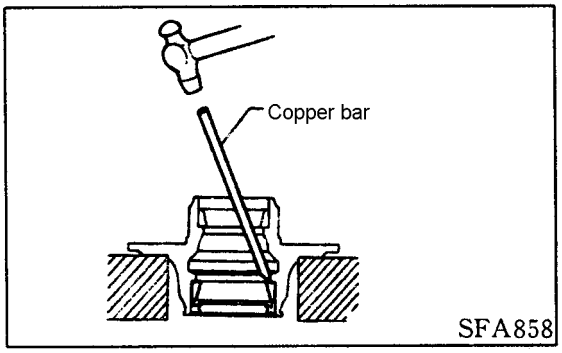

Check

Clean the hub bearing and hub.

Hub bearing

Make sure if the bearing could be in free rotation, and whether there are noise, crack, dent and wear or not.

Hub

Check the hub for crack by magnetic particle inspection.

https://truckmanualshub.com/

Assembly

Use the proper tool to install the bearing outer ring into the hub.

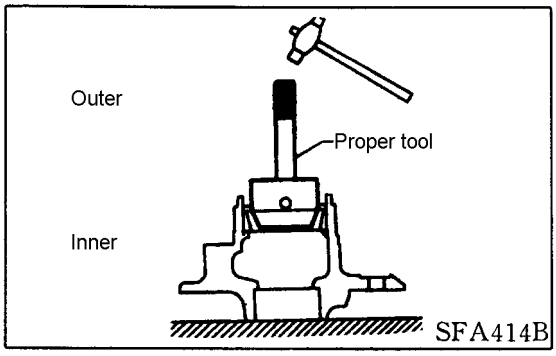

Smear some grease on the bearing tapered face.

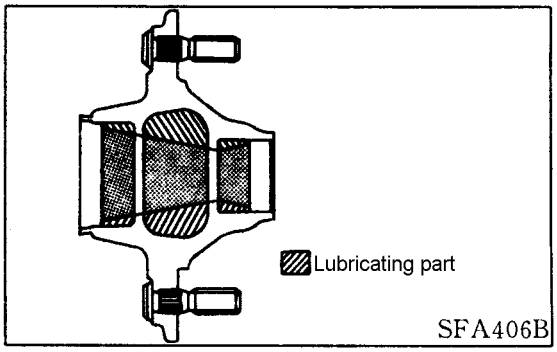

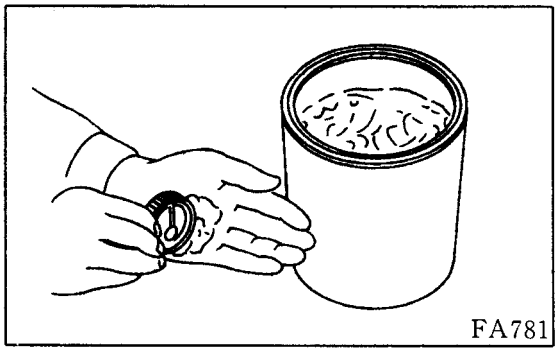

Smear some grease on the flange part of the oil seal and then install it in the hub.

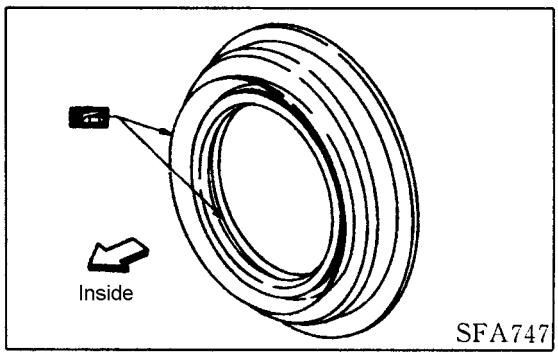

https://truckmanualshub.com/

Steering Knuckle

Disassembly

Use special tool to dismount the steering tie-rod.

Install the check nut on the check bolt in reverse to protect the bolt.

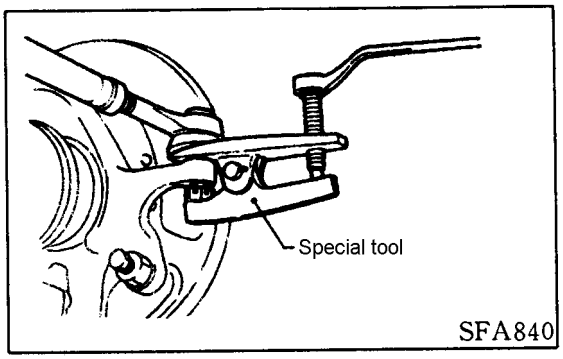

Dismount the steering knuckle from the ball head connecting part.

(1) Loose (Don't dismount) the upper and lower ball head pin clamp nut.

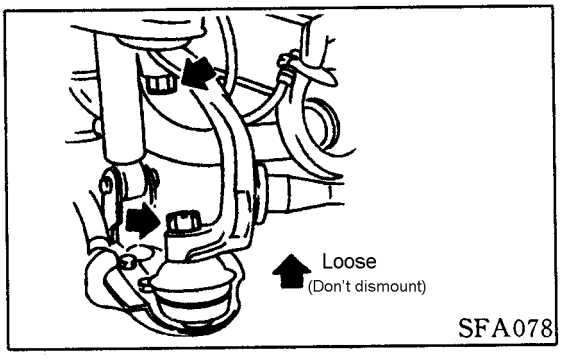

(2)Dismount the steering knuckle from the upper and lower ball head connecting part by special tool. Never screw off the loose nut in step (1).

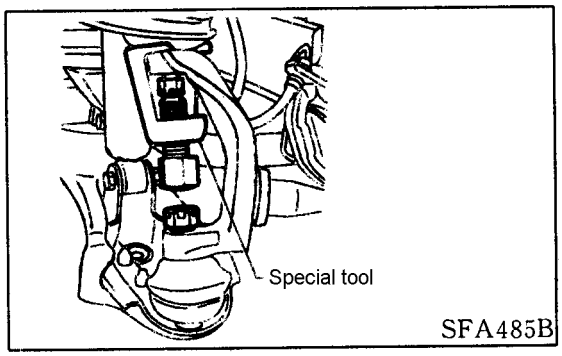

(3)Screw off thelock nut of ball head pin, and lift the lower transverse arm by the jack.

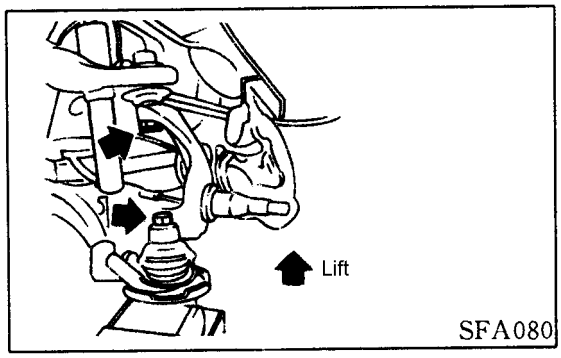

(4)Dismount the steering knuckle from the upper and lower transverse arm.

https://truckmanualshub.com/

Inspection

Steering knuckle

Check the steering knuckle for any defprm, crack or damages by the method of magnetic test.

Assembly

Use the jack to lift the lower transverse arm, and install the upper and lower ball head pin and the steering knuckle.

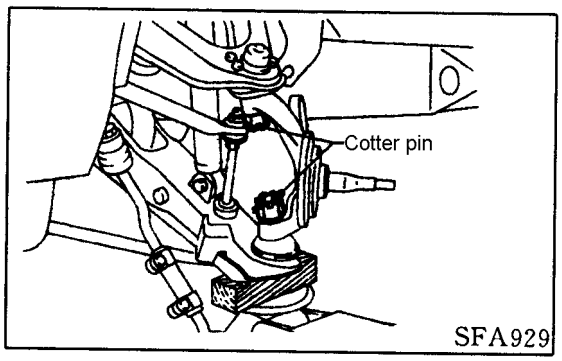

Note:

Never let the grease on the steeing knuckle tapered face and the thread and tapered face of the upper and lower ball head pin assembly.

During the assembling process, do not damage the dustproof of the ball head pin.

After assembly the steering knuckle, adjust the hub bearing pretightening force.

See chapter "Hub & brake disc" to be the reference o fhe adjustment of pretightening force.

https://truckmanualshub.com/

Front Independent Suspension

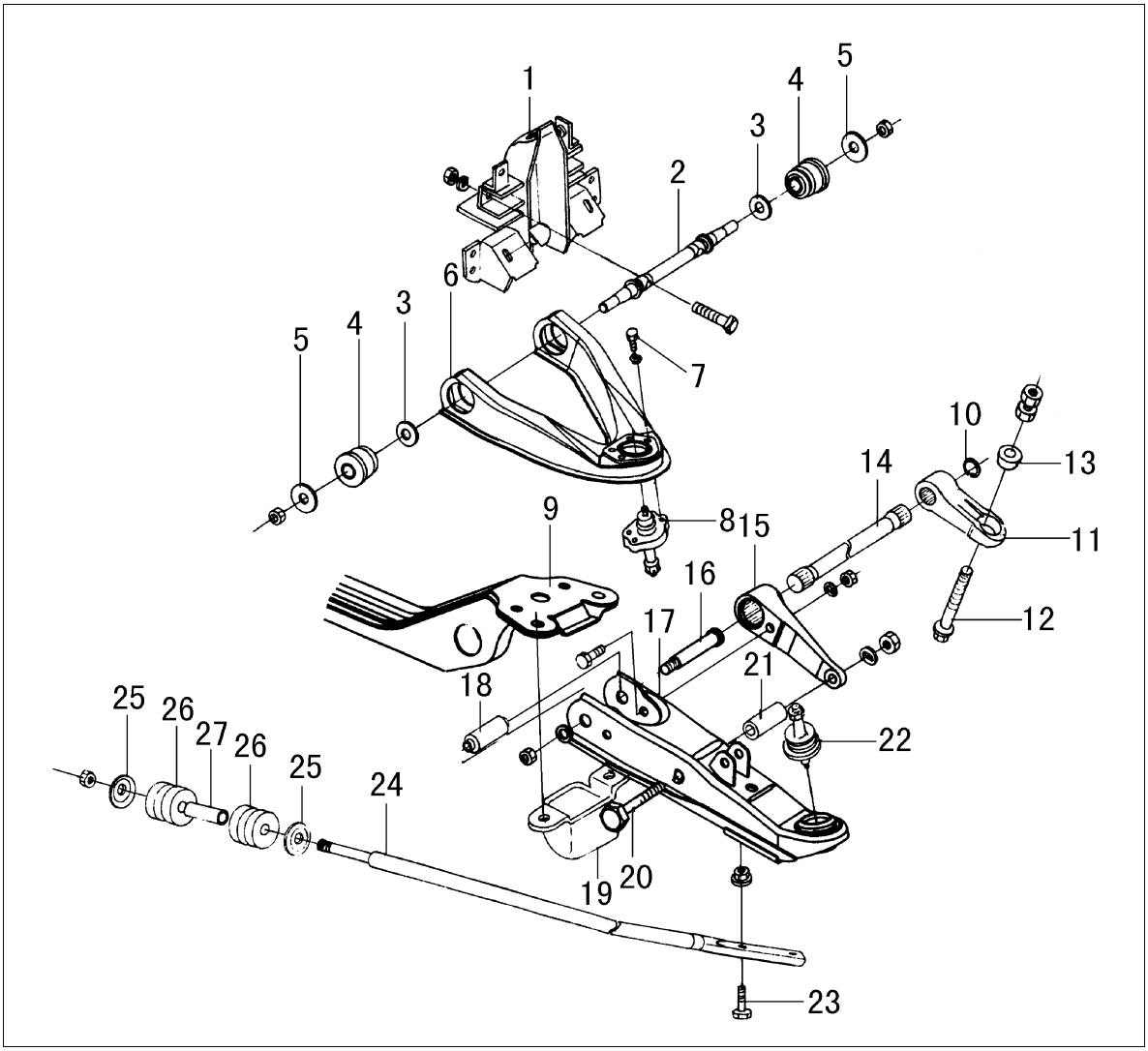

1.Shock absorber assy
2.Upper arm shaft
3.Inner side washer
4.Rubber bush assy
5.Big washer
6.Upper transverse arm
7.Bolt
8.Round head pin assy
9.Front suspension cross member assy
10.Circlip for holes
11.Torsion bar adjusting arm
12.Adjust bolt
13.Round head
14.Front torsion bar spring
15.Torsion bar fixing bar
16.Lower arm shaft
17.Lower transverse arm assy
18.Rubber bush assy
19.Limit block assy
20.Bolt
21.Rubber bush assy
22.Round head pin assy
23.Bolt
24.Propelling rod
25.Big washer
26.Rubber bush
27.Spacer sleeve

When assembling the rubber part, the final tightening has to be under such condition: wheel on the ground, no load.

Condition of no load: with full fuel, coolant, engine lubricant, and the spare tyre, jack, driver tool on the vehicle, and the vehicle park on the level position.

https://truckmanualshub.com/

Shock absorber

Disassembly and assembly

When disassembling and assembling the shock absorber, never let the oil or grease touch the rubber parts.

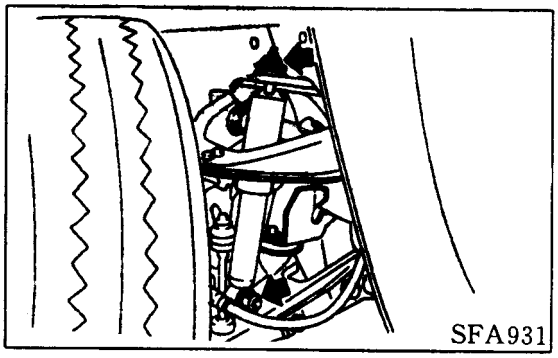

Check

Use the proper cleanser to wash all the parts except the non-metal parts, and then dry them with compressed air.

Make use of the compressed air to clean the non-metal parts.

Check the shock absorber for loose or crack ad oil leakage, replace if necessary.

Check the piston lever for crack, deform, or other damages, replace if necessary.

Check the rubber parts for wear, crack, damage or deform, replace if necessary.

Torsion bar spring
Disassembly

Make a location mark between the torsion bar and its adjusting arm and the fixed arm.

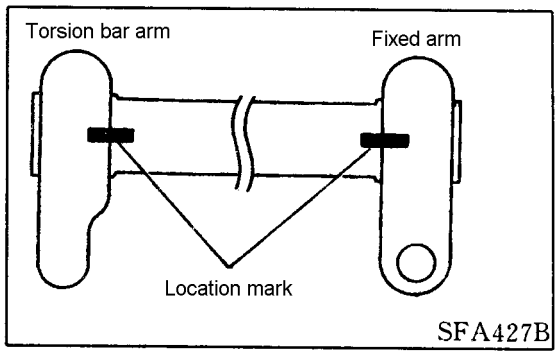

Measure the length of the extruding part of the adjusting bolt.

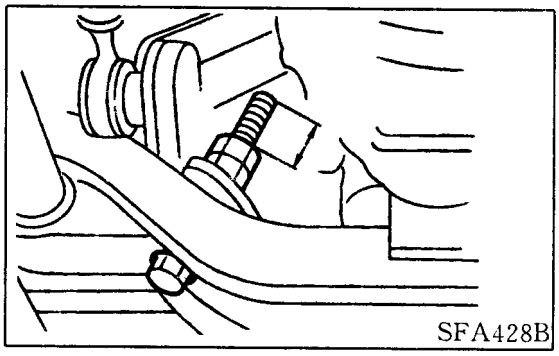

https://truckmanualshub.com/

Disassemble the torsion bar adjusting arm from behind and draw out the torsion bar.

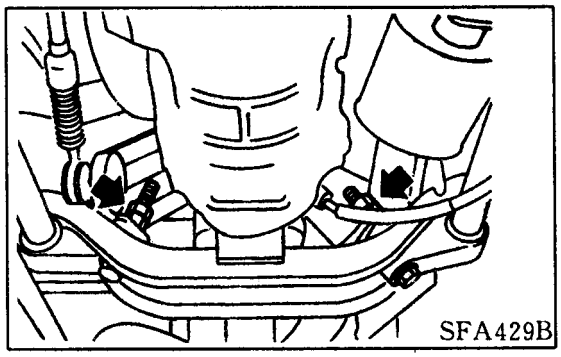

Disassemble the torsion bar fixed arm.

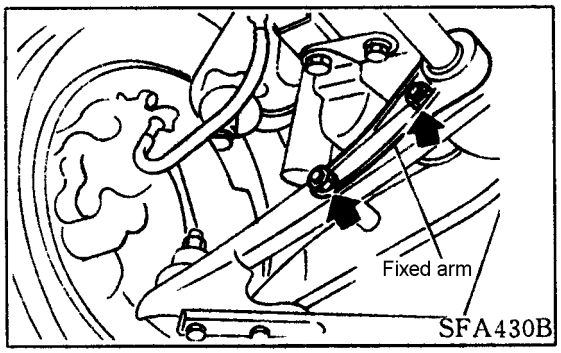

Check

Check the torsion bar for any wear, deform, bend or any other damages.

Check the parts serrating spline for crack, wear, distort or other danages.

Assembly and adjustment

Along the tightening direction to adjust the adjusting nut of the adjusting arm. Never adjust the nut along the nut loose direction.

1.Install the torsion bar fixed arm to the lower transverse arm.

2.Wipe a layer of grease on the spline tooth of the torsion bar.

3.Adjust the lower transverse arm position to assure the alignment of both the torsion bar mark and its adjusting arm mark.

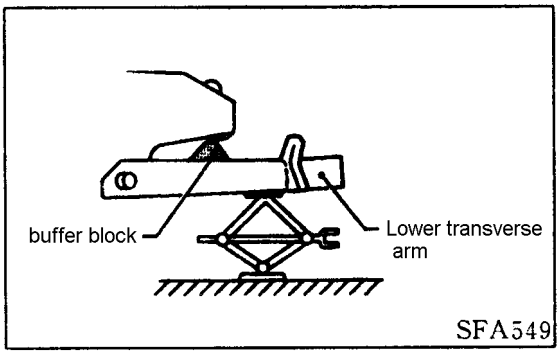

4.Install the torsion bar spring

When install the torsion bar spring, please pay attention to the mark on the end of the spring. Don't install in wrong direction.

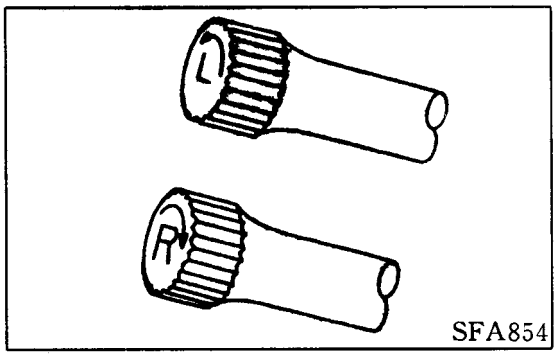

5.Install the adjusting arm

Make sure the vehicle is in no load.

Make the same extending length of the fixed bolt and the extending length before disassembling, and then screw down.

Tighten or loose the adjusting nut to adjust the vehicle gesture, and before tightening, there should be loose first and then tighten up as required.

After adjusting the vehicle body gesture, tighten the locking nut to the required torque.

Tightening torque: 108~127N.m

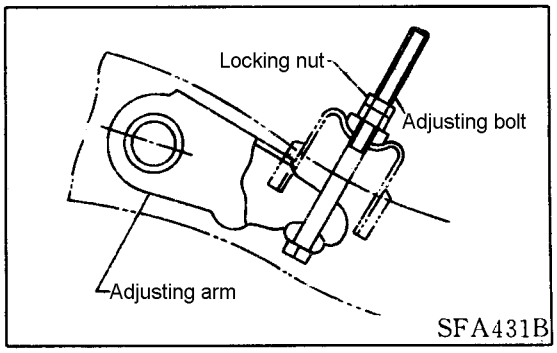

6. With the wheel on ground (vehicle no load), shock the vehicle to eliminate the friction force of the suspension parts.

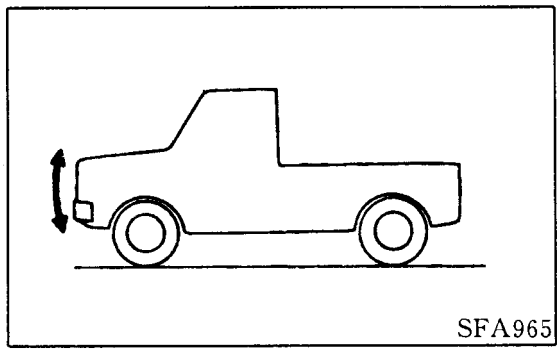

7.Measure the vehicle gesture H

H=A-B mm (no load)

See "Maintenance data & explanation" for reference.

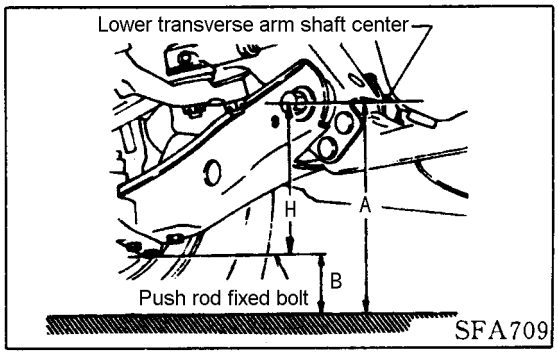

(1) Shock vehicle front part up and down for 4~5 times to make the vehicle gesture is in correct height.

(2) Measure the vehicle gesture value H.

See "Wheel alignment" of "Maintenance data & explanation".

(3) If the H is different from the required value, adjust the vehicle gesture.

See "Wheel alignment" of "Maintenance data & explanation".

(4) Check the front wheel alignment if necessary.

See "Wheel alignment" of "Maintenance data & explanation".

8.If the H value is not in the required range, adjust the adjusting nut of the adjusting arm to assure the correct vehicle gesture.

Upper transverse arm

Disassembly

Disassemble the fixed nut of the lower shock absorber.

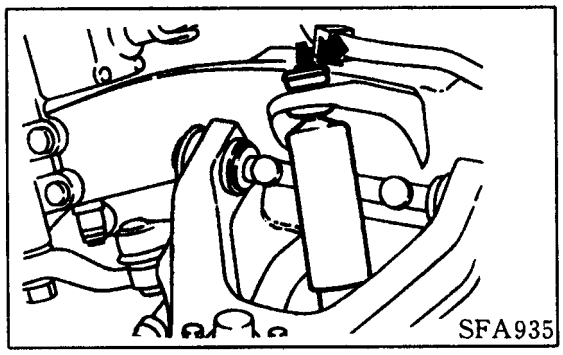

Disassemble the connecting bolt of the upper ball head pin and upper transverse arm.

Lift the lower transverse arm by jack.

Dismount the fixed bolt of the upper transverse arm shaft.

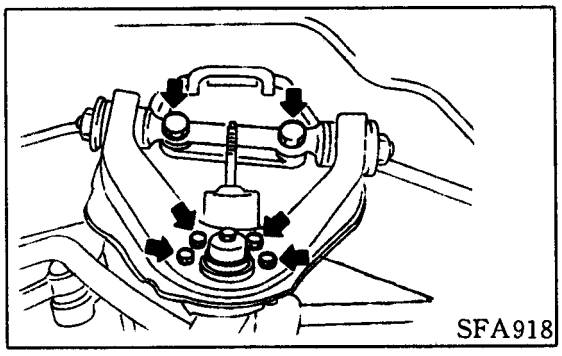

Assembly

When tightening the upper transverse arm shaft, make use of some adjusting spacer of the wheel camber.

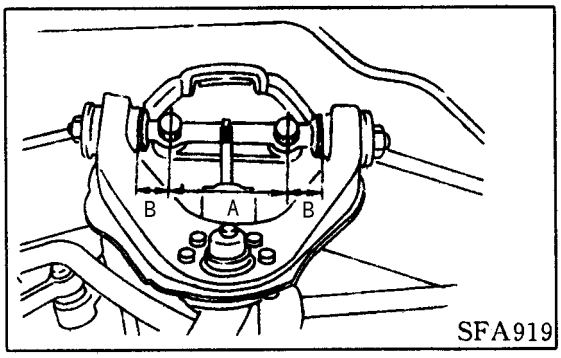

https://truckmanualshub.com/

Check the A and B dimension after tightening.

A=110mm

B=32mm

Assemble the upper ball head pin on the upper transverse arm.

Assemble the upper fixed nut of the shock absorber.

Tighten the upper transverse arm locking nut under the condition of wheel on ground, no load.

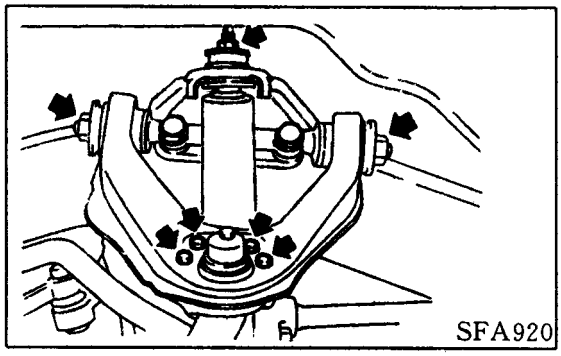

After the assembly, check the front wheel alignment and adjust if necessary.

See "Wheel alignment" of the "Maintenance data & explanation" for reference.

Disassembly

Press out the upper transverse arm shaft with a block.

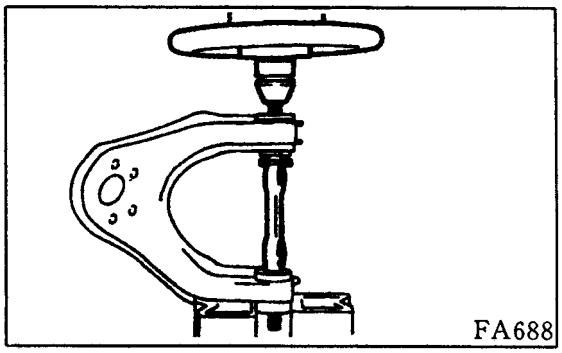

Check

Check the upper transverse arm shaft and rubber sleeve for damage and replace if necessary.

Check the upper transverse arm for deform or break and replace if necessary.

Assembly

Wipe some soapy water on the rubber sleeve.

When pressing the upper transverse arm bush, the bush has to be pressed into the proper position.

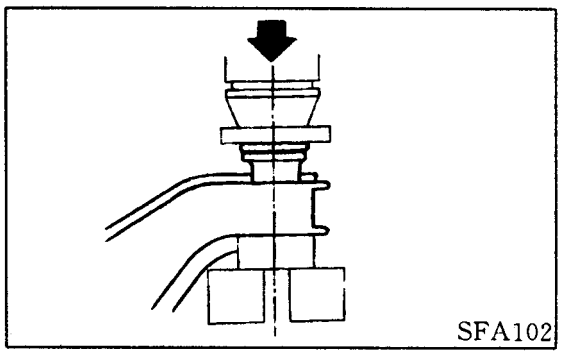

https://truckmanualshub.com/

Install the upper transverse arm shaft and inside washer.

Install the inside washer by using of the fillet of inside machined surface.

Press the bush of the other end, and the bush must be pressed into the proper position.

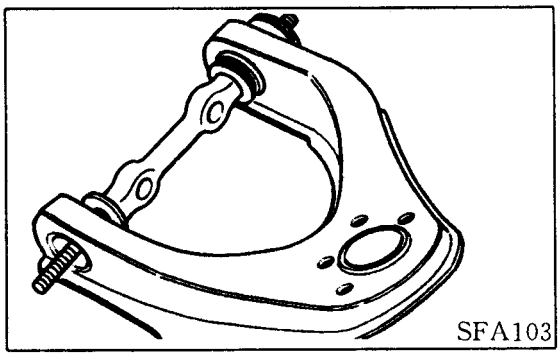

Tighten the nut for the moment.

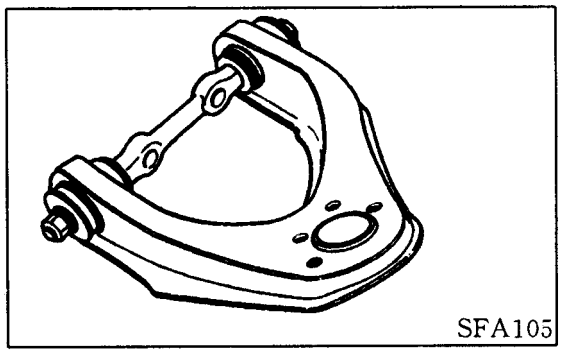

Push rod
Disassemble and assemble

Disassenble the assembling nut of the lower transverse arm and the frame.

Support the lower transverse arm by jack.

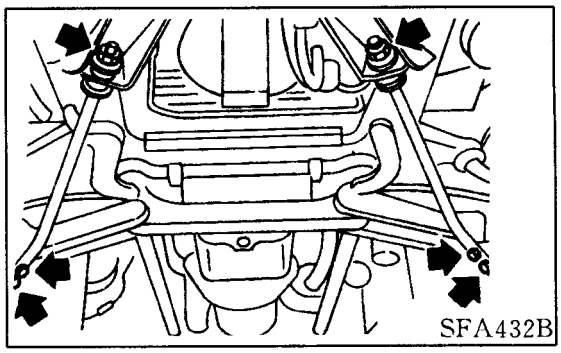

Assemble the push rod

Confirm the correct installation of the bush and washer. The final tightening of the rubber parts has to be under the condition of no load, wheel on ground.

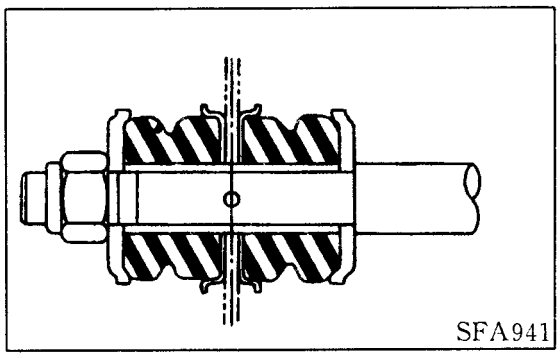

Check

Check the push rod for deform or distort, replace if necessary.

Check the rubber bush for crack, wear, or other damage, replace if necessary.

https://truckmanualshub.com/

Lower transverse arm

Diasassembly and assembly

Disassemble the lower fixed nut of the lower shock absorber bracket.

Disassemble the torsion bar spring. See "Torsion bar spring disassembly".

Disassemble the fixed nut of push rod. See "Disassembly and assembly of the push rod".

Disassemble the lower transverse arm ball head pin from the steering knuckle. See "Front axle--steering knuckle".

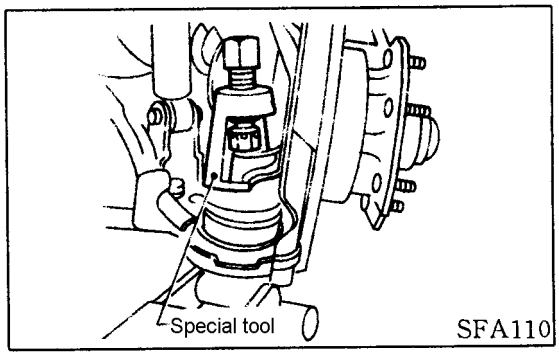

disassemble the lower transverse arm fixed nut.

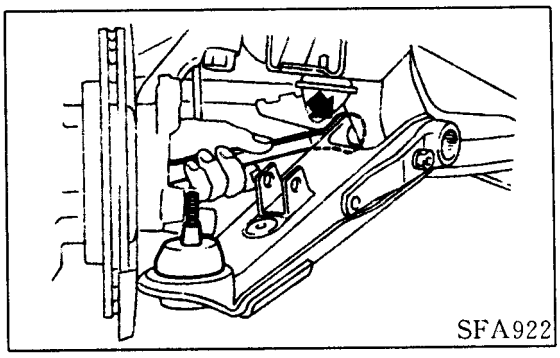

Dismount the rubber bush of the lower transverse arm shaft from the frame by the proper tool.

When assembling the rubber bush, wipe some sopy water on the bush face.

After assembling the lower transverse arm, adjust the front wheel alignment and vehicle height. See "Front alignment" of "Examine and repair".

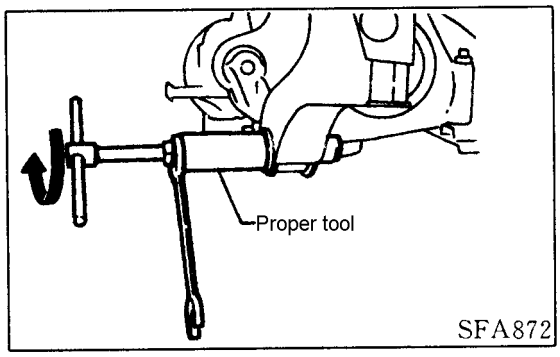

Check

Lower and upper transverse arm

Check the lower and upper transverse arm for damage and crack, replace if necessary.

Lower transverse arm bush

Check the bush for deform or other damage, replace if necessary.

https://truckmanualshub.com/

Upper and lower ball head pin

Disassemble and assemble

Disassemble the upper and lower transverse arm. See "Steering knuckle".

Check

Shock at direction A (see the the right figure), and check the ball head pin.

See "Maintenance data & explanation" for reference.

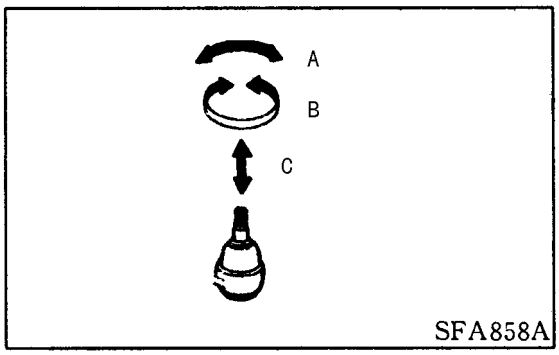

If the torque A is not in the required range, replace the ball head pin.

Check the ball head pin for its driving torque B.

See "Maintenance data & explanation" for reference.

If torque B is not in the required range, replace the ball head pin.

Check the ball head pin vertical clearance C.

See "Maintenance data & explanation" for reference.

If the clearance value is over than the required range, replace the ball head pin.

Check the dust proof for damage.

Note:
If the ball head pin is new, and the dust proof is damaged, replace the dust proof under the quide of the professional person. If the ball head pin is in use, and the dust proof is damaged, replace the ball head pin assembly.Only replace the dust proof is forbidden.

Maintenance Data & Explanation

Torsion bar spring

Length mm 1000

Diameter mm 30

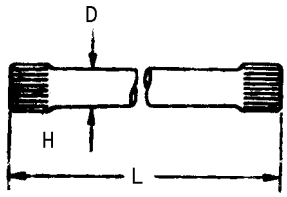

Torsion bar spring

SFA469B

Shock absorber

Diameter A mm 54

Diameter B mm 45

Recover risistance N 2250±350

Compression resistance N 1000±200

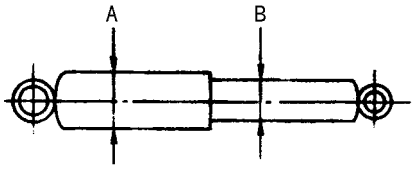

SFA489B

Check and adjustment

Front alignment (no load)

Wheel camber: -0°25′~0°35′

Caster: 0°15′~1°15′

King pin inclination: 7°50′~8°50′

Difference value of left and right wheel alignment (wheel camber, caster, king pin inclination: less than 45′

Toe-in mm 0~2

Front wheel maximum turning angle

Inside turning angle:35°~36°

Outside turning angle: 27°~29°

Vehicle gesture (no load)

Lower transverse arm central height H mm 139~145

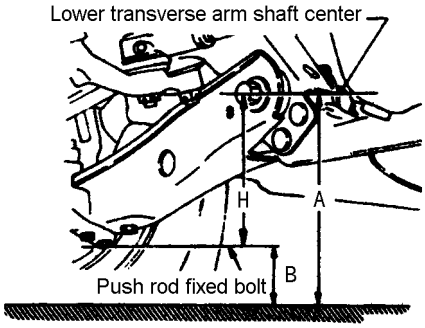

SFA

No load: full fuel, coolant, lubricant, and original tyre, jack and driver tool, vehicle is parked on the level ground.

Ball head pin

	Upper ball head pin	Lower ball head pin
Swing force A (N) (Measure position: cotter pin hole)	19.6~122.6	9.8~39.2
Driving torque B (N.m)	1.0~4.9	1.0~3.9
Vertical clearance limit C (mm)	0.1~1.0	0.1~1.0

Hub bearing

Hub bearing locking nut Tightening torque N.m	34~39
Loose locking nut first then tighten again N.m	34~39
Withdrawal angle	45°~120°
Hub bearing driving moment N.m	9.8~27.5
Axial clearance mm	0

https://truckmanualshub.com/

Rear axle & Rear Suspension

RA

TOC

Precaution.....RA-1
Rear Axle and Rear Suspension.....RA-2
Rear Axle.....RA-4
Rear Suspension.....RA-9
Maintainance Data and Explaination.....RA-13

https://truckmanualshub.com/

Precaution:

Assemble the rubber parts under the vacuum conditions, tighten them at last.

No load: Full fuel, coolant and oil, equipped with spare tyre, jack, and driving tools.

Use the tools to disassemble and assemble the brake pipes.

Every time the suspension part is moved, the front wheel alignment must be checked, and adjust it if necessary.

https://truckmanualshub.com/

Rear Axle and Rear Suspension

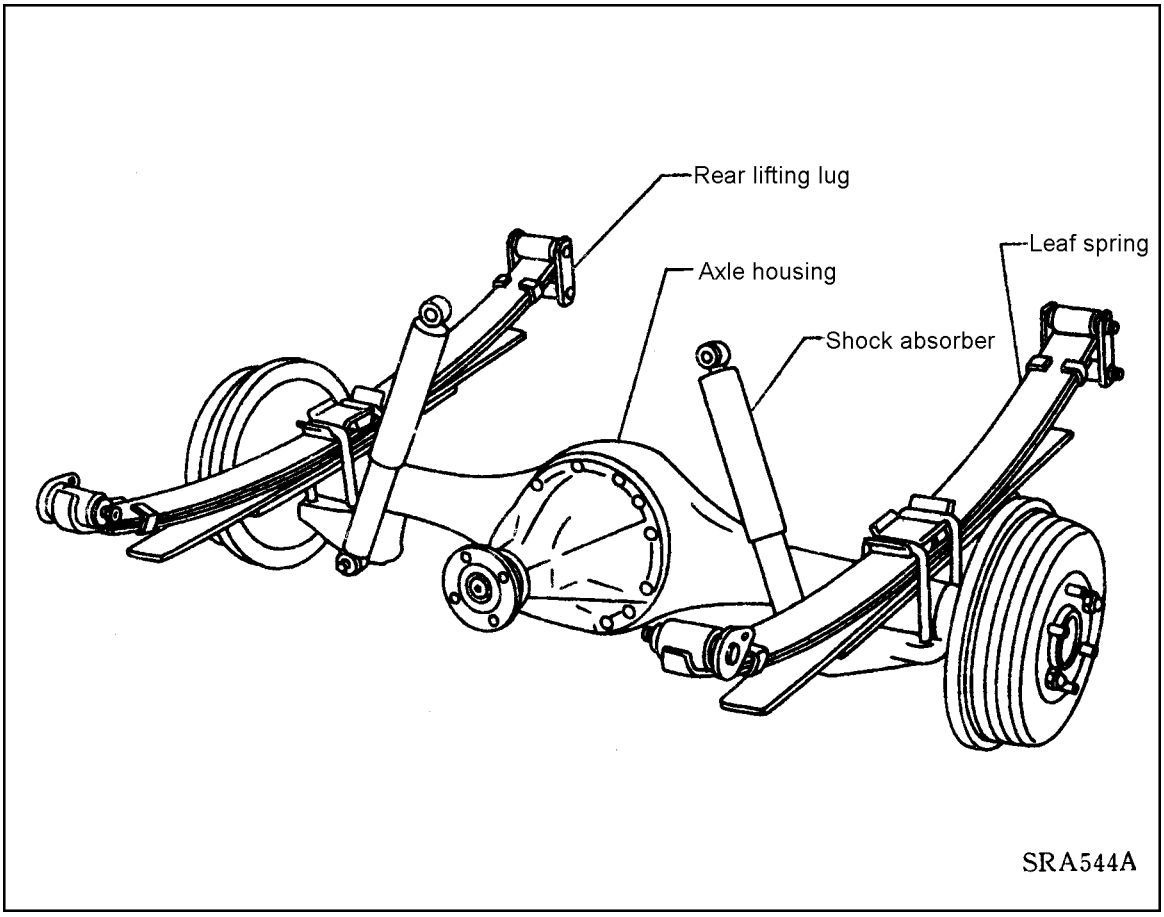

https://truckmanualshub.com/

Rear axle and rear suspension

Check rear axle and rear suspension parts for any looseness, wear, or damage.

Turn the left and right wheel to check if it is in normal condition.

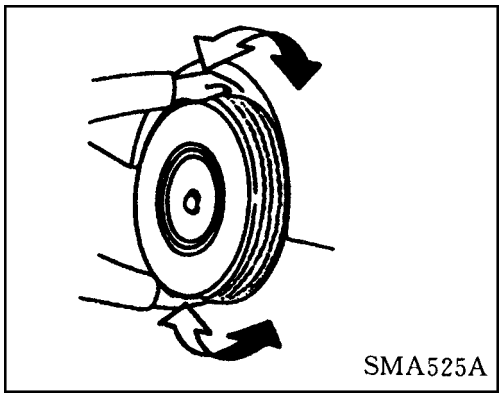

Retighten all the bolts and nuts to the required torque.

Tightening torque: aim to the requirement of rear suspension

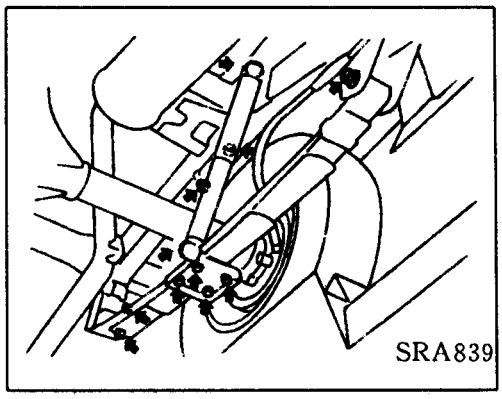

Check the shock absorber for leakage or other damage.

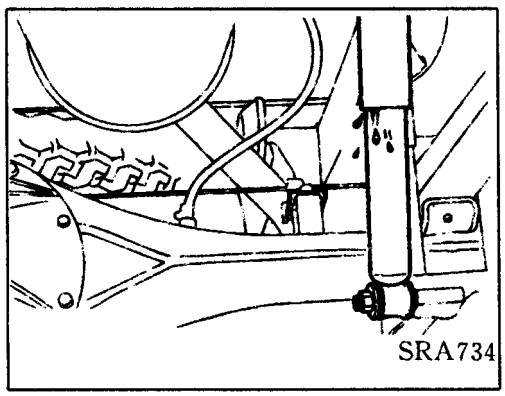

Wheel bearing

Axle end clearance:

1.Check the bearing drive to see if it is smooth.

2.Check the axle end clearance.

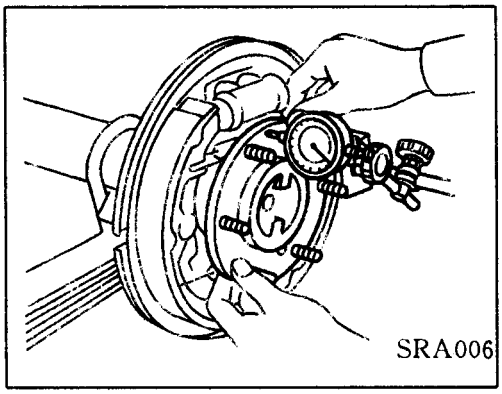

https://truckmanualshub.com/

Rear Axle

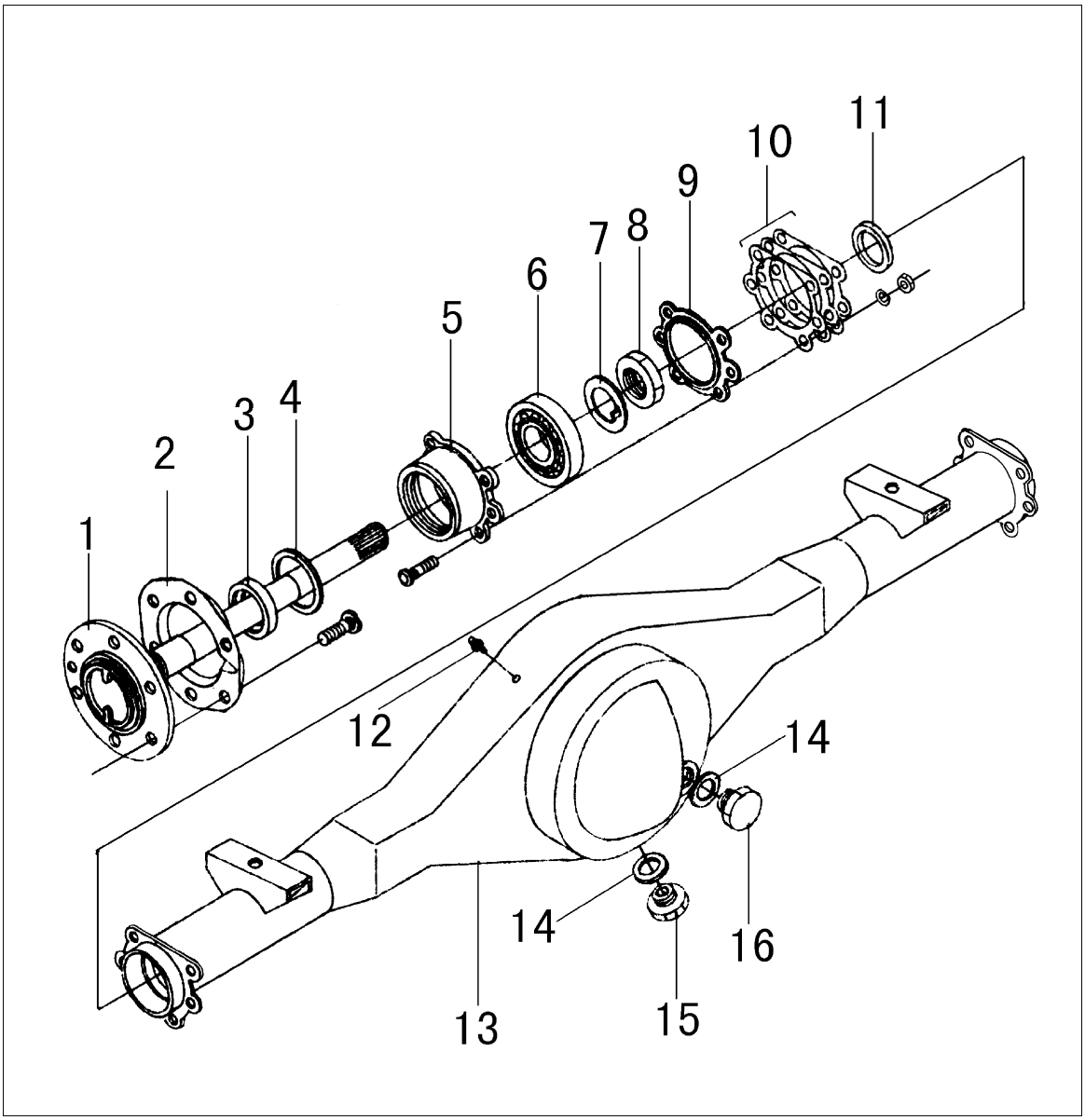

1.Rear axle half axle
2.Dustproof
3.Half axle outer oil seal seat
4.Half outer oil seal assy
5.Half axle bearing seat
6.Half axle supporting bearing
7.Lock spacer
8.Half axle bearing lock nut
9.Rubber seal gasket assy
10.Adjusting spacer
11.Half axle inner oil seal assy
12.Ventilation plug assy
13.Rear axle housing assy
14.Seal washer
15.Screw plug assy
16.Scerw plug

https://truckmanualshub.com/

Disassemble

1.Disassemble the parking brake cable and brake pipe.

2.Disassemble the brake drum.

3.Remove the bearing lock nut.

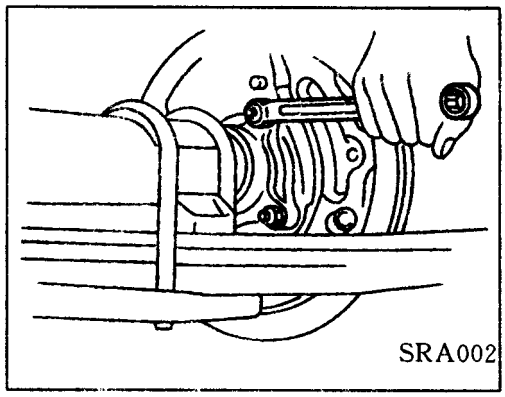

4.Pull out the half axle by special tool.

Be careful not damage the oil seal when pulling the half axle.

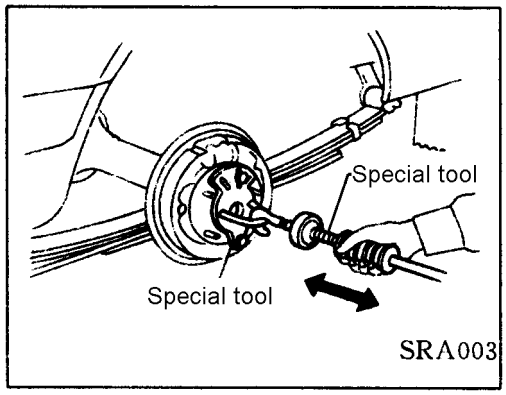

5.Disassemble the oil seal.

the disassembled oil seal can't be reused, replace a new one.

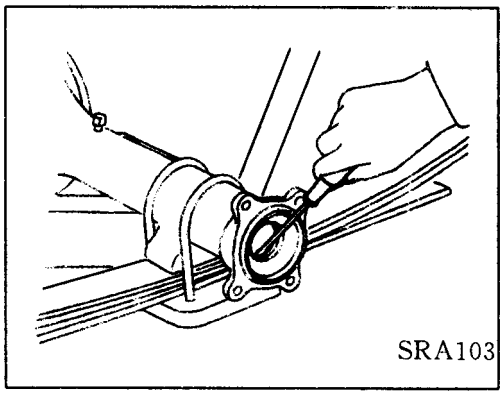

6.Make use of the screw driver to turn up the protruding part of the lock washer.

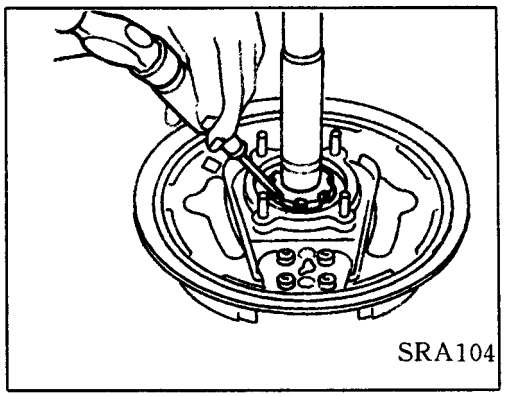

https://truckmanualshub.com/

7.Remove the bearing lock nut by special tool.

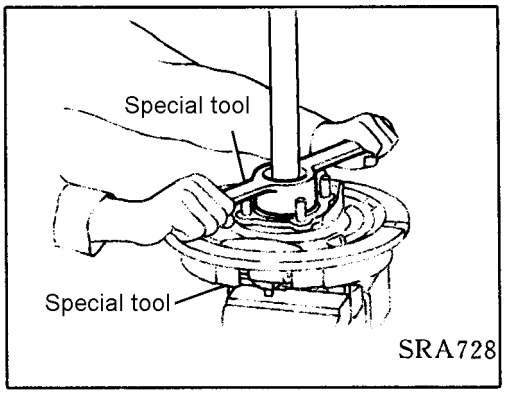

8.Disassemble the wheel bearing, bearing cover and splash guard from the half axle.

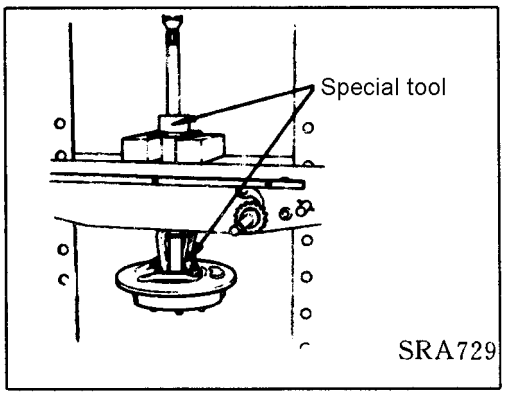

9.Disassemble the grease seal ring from the bearing cover by a proper lever.

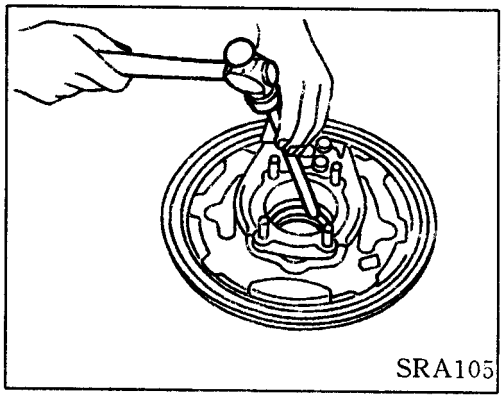

10.Use a brass bar to disassemble the outer ring of the wheel bearing.

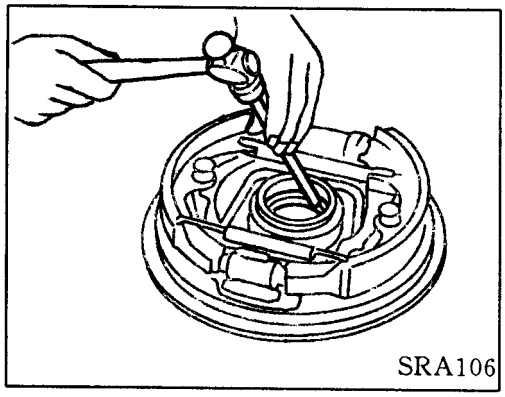

https://truckmanualshub.com/

Check

Half axle

Check the half axle for any bend, crack, damage, wear or distort, replace if necessary.

Wheel bearing

Make sure if the bearing drive freely, without noise, crack, notch or wear.

Rear axle housing

Check the rear axle housing for distort or crack, replace if necessary.

Assembly

1.Make use of the proper tool to install the wheel bearing outer ring.

2.Install a new grease seal ring in the bearing cover.

After installing the new seal ring, wipe some li-based grase on the edge of the seal ring.

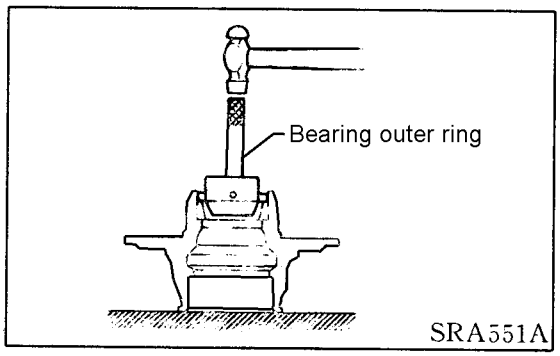

3.Make use of a copper bar to install the bearing inner ring.

Smear some li-based grease on every conic bearing ring.

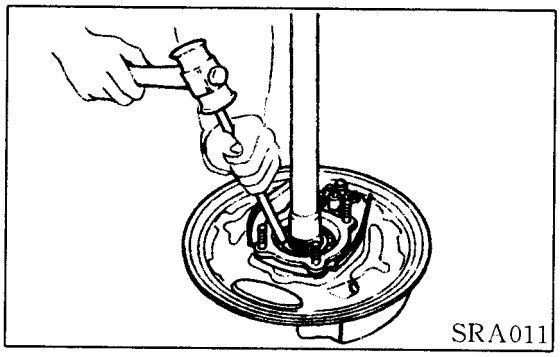

4.Assemble the flat spacer and a new bearing lock washer.

5.Use tool to tighten the bearing lock nut.

Tighten the lock nut to make the bearing lock washer edge in the proper groove of the bearing lock nut, and then make the edge upwarping.

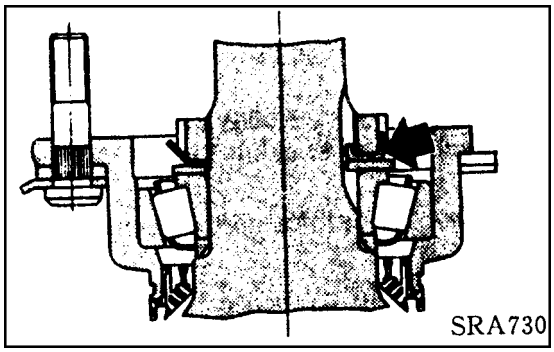

6.Assemble a new oil seal by the proper tool.

After assembling the new oil seal, smear some grease on the edge of the oil seal.

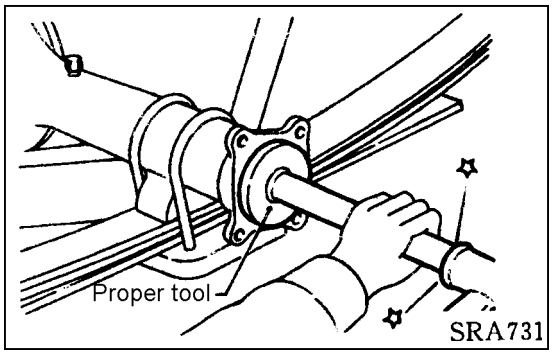

7.Put lithium based lubricating grease into the flute of the axle end cover.

8.Put lubricating grease into the Spline slot of half shaft and wipe lubricating grease on the half shaft's surface where need to be lubricated.

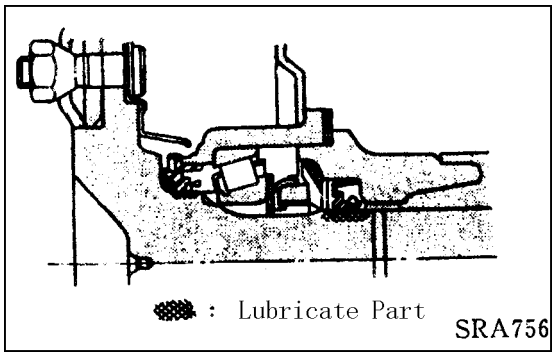

9.Adjust clearance of axle end.

10.Select gasket end face gasket

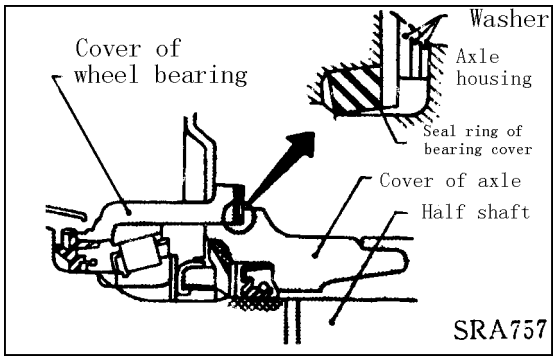

11.Assembly half shaft by guide tool.

When assembly half shaft, pay atttention not to damage oil seal.

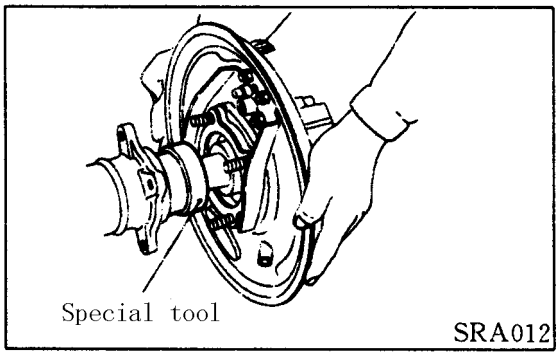

12.Measure clearance of axle end.

Clearance of axle end:

Check the half shaft of both sides

One side half shaft (Left or right)

0.4~1.6mm

The other side half shaf

0.02~0.15mm

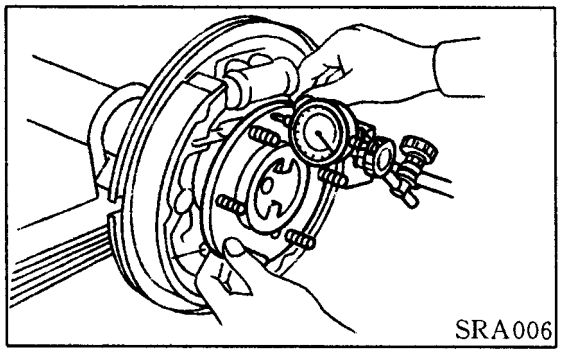

13.If the clearance of axle end is not in prescriptive range, select gasket of end cover again.

When adjust the clearance of axle endpay atttention not to damage oil seal.

https://truckmanualshub.com/

Rear Suspension

Structure Summary

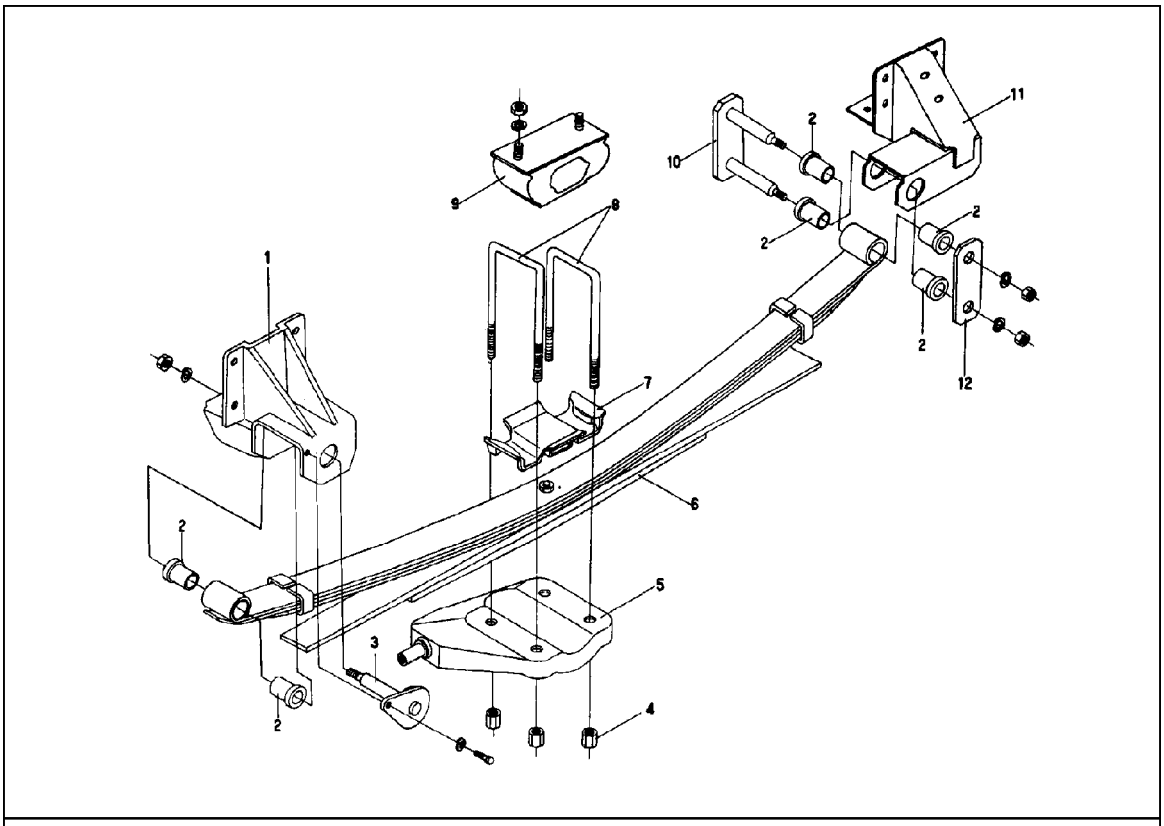

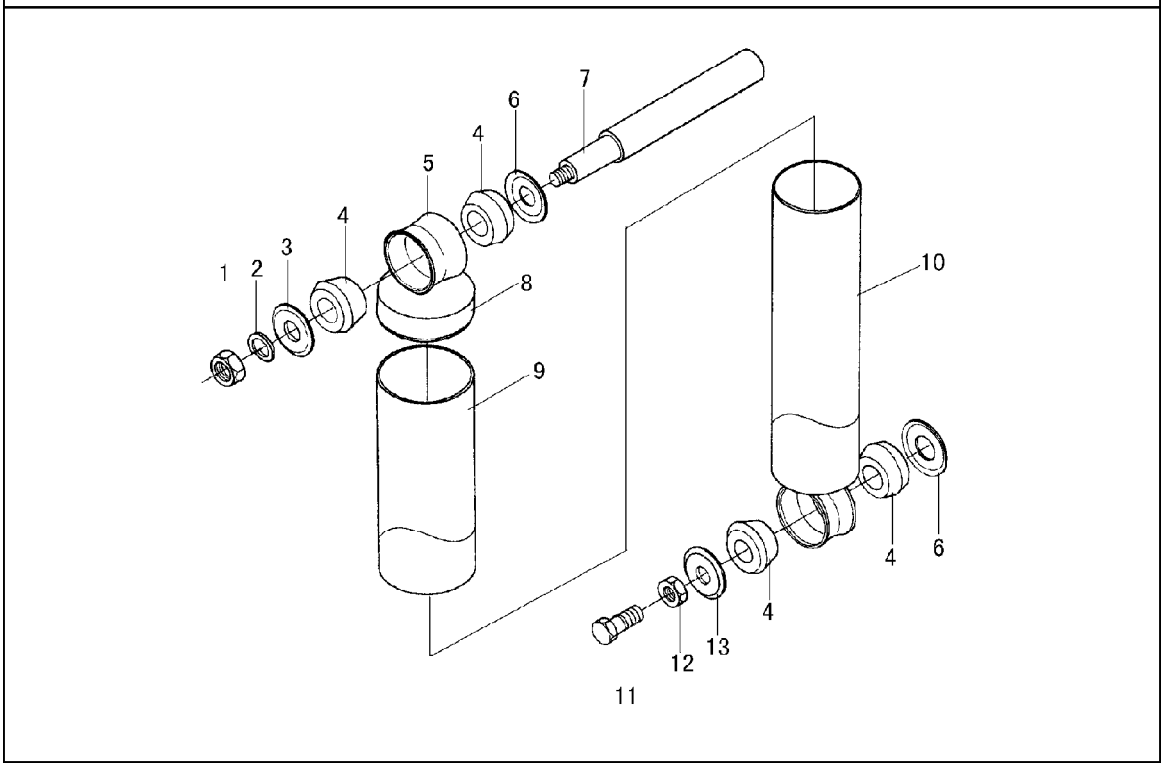

https://truckmanualshub.com/

Shock Absorber

Disassembly and assembly

Loose the nut of uper and lower end to disassembly the shock absorber.

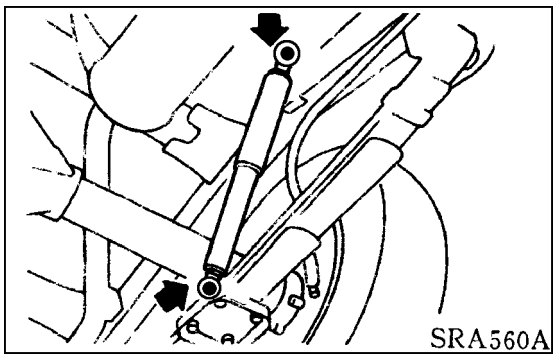

Check

If there are any oil leak, crack or distortion on shock absorber, it has to replace the shock absorber ass'y.

If there are any crack or distortion on rubber sleeve, it has to replace the rubber sleeve

Leaf Spring

Disassembly and assembly

Lift rear part of vehicle, mount supporting seat.

1.Loose the lower enf of shock absorber and disassembly U type bolt.

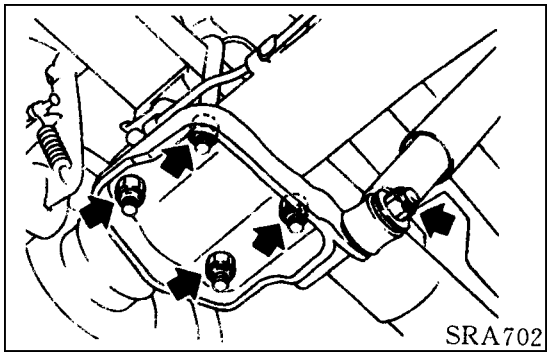

2.Disassembly shackle of rear spring.

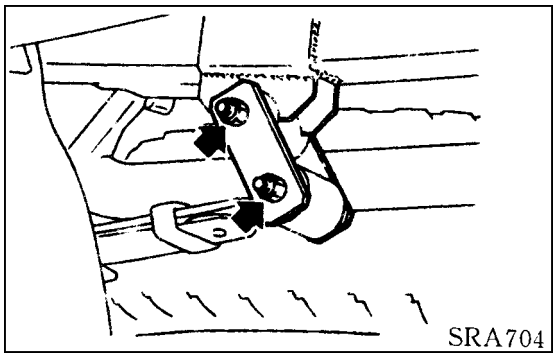

3.Disassembly front pin.

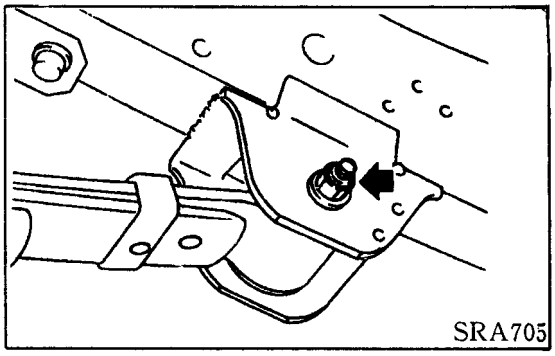

Check

Check if there are any crack on leaf spring. If there are, replace the spring.

Check if there are any abrasion, crack, distortion or damaged screw thread on front bracket, shackle, U type bolt and gasket. If there are any, replace the parts when necessary.

Check if there are any distortion or craze on all sleeves, replace them when necessary. Make sure that sleeves are correctly assemblyed.

Assembly

1.Wiper suds on rubber sleeve.

2.Assembly shackle and front pin and tighten the nuts by hand.

3.Assembly supporting plate and nut below leaf spring or axle housing.

4.Tighten U type bolt in diagonal.

Tighten U type bolt to make them all in the same length on the scew thread part below the suporting plate.

5.Assembly shork absorber and tighten nuts by hand.

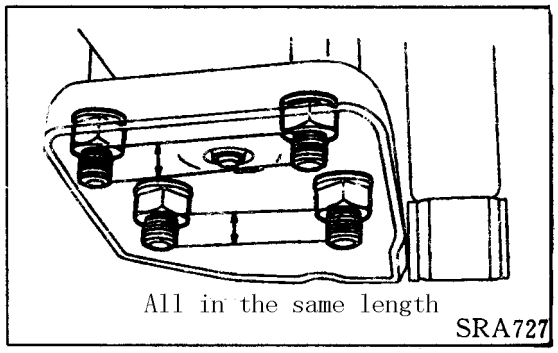

6.On non-load condition shake vehicle to eliminate the damp of leaf spring.

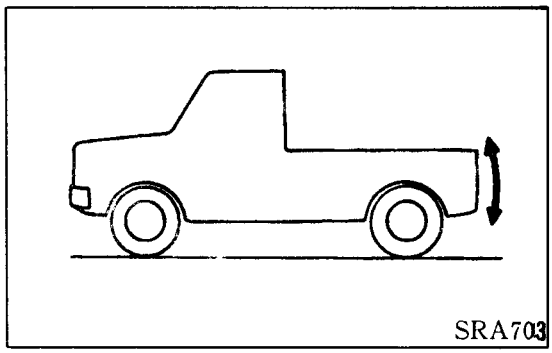

7.Thighten shackle, front pin and nut of shock absorber.

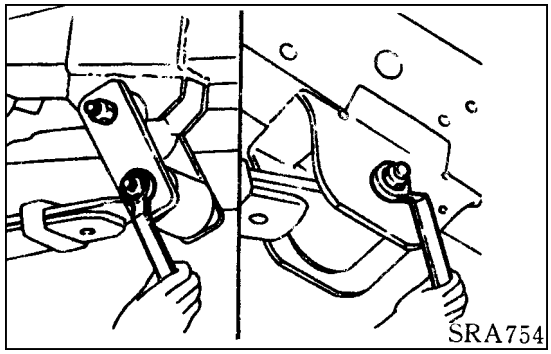

https://truckmanualshub.com/

Rubber Cushion Block

Disassembly rubber cushion block

Make sure front mark is on the outside of vehicle as the picture showed.

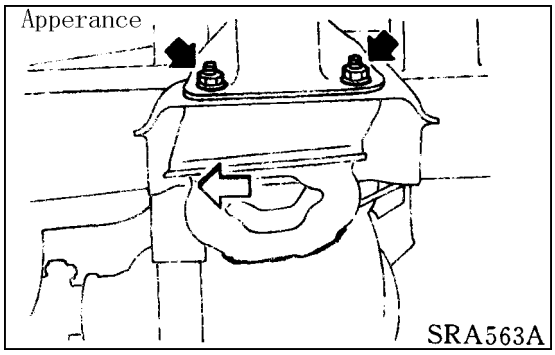

Maintainance Data and Explaination

Leaf Spring

Thickness (mm) --Amount of piece

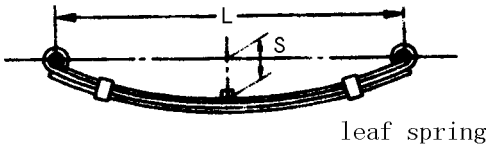

Main spring: 7--3

Auxiliary spring: 14--2

Static deflection S: 101

Length L (mm) : 1200

Width (mm) : 70

Shock Absorber

Work length (mm) : Min/Max: 338/548

Jouney (mm) : 210

Damp (N) : Extend/Compress: 2250±350/600±130

Diameter (mm) : A/B: 54/45

Check and adjust

Bearing of wheel

Side clearance of wheel bearing (mm) : 0.02 ～ 0.15

Thickness of side gascket of rear axle (mm) : 0.05

0.07

0.10

0.15

0.20

0.50

1.00

Tightne torque of bearing locking nut (N.m) : 167~196

Tightne torque after loose the bearing locking nut (N.m) : 167~196

Start torque of turning the wheel bearing (N.m) : 2.1 ～ 3.4

Bolt of nub (N) : 24.5 ～ 40.2

https://truckmanualshub.com/

https://truckmanualshub.com/

Profeller Shaft and Differential

PD

Catalog

Preperation PD-1
Profeller Shaft PD-4
Maintainance PD-9
Disassembly and Assembly PD-10
Main Reducer PD-11
Disassembly PD-12
Check PD-17
Adjust PD-18
Assembly PD-19
Maintainance Data and Explaination PD-25

Preperation

Special Tool

1.Differential fixing assistant tool：

1） Engine bracket 2） Seat

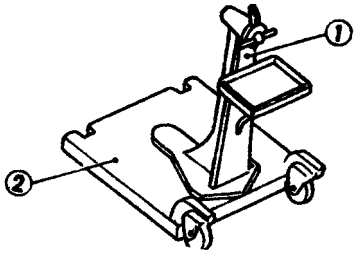

2.Differential assistant tool：

Assembly driving axle

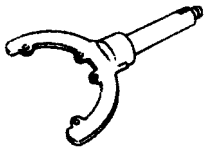

3.Flange spanner：

Disassembly and assembly driving axle locking nut and drive gear locking nut

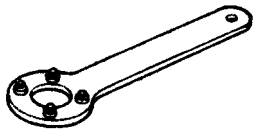

4.Differential bearing adjusting nut spanner：

Adjust bearing preload and tooth sapce

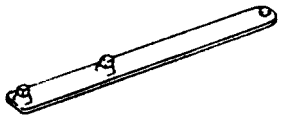

5.Differential bearing adjusting nut spanner：

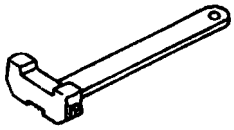

6.Differential bearing adjusting nut spanner：

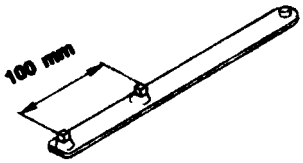

7.Drive wimble gear assembly gauge：

1） Model shaft

2） Height gauge

3） Thrust screw

Select gear height adjusting gasket

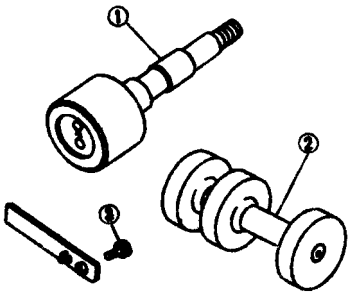

8.Drive wimble gear assembly gauge：

1） Height gauge

2） Model shaft

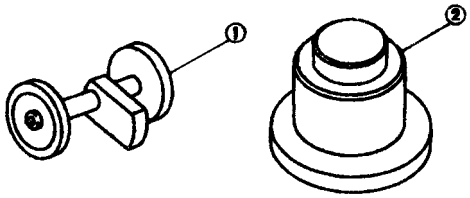

9.Drive wimble gear assembly gauge：

1） Height gauge

2） Tightening clincher

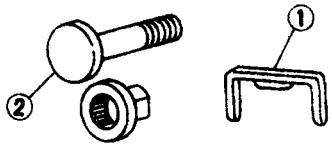

10.Drive wimble gear inside track tension seat：

1） Tension implement

2） Seat

Disassembly and assembly drive bearing rear taper bearing

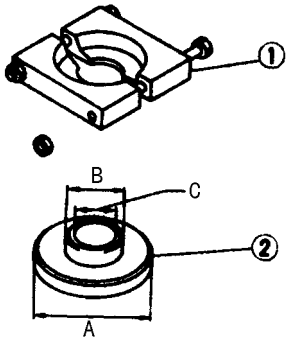

11.Preload testing gauge：

1） Torque spanner

2） Inserted joint

3） Inserted joint

Teat gear bearing preload and total preload

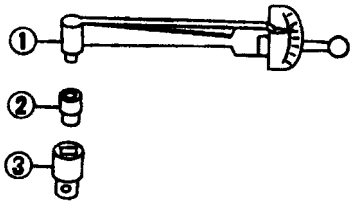

12.Differential bearing tension implement seat：

1） Tension implement

2） Joint

Disassembly and assembly drive bearing inside taper bearing

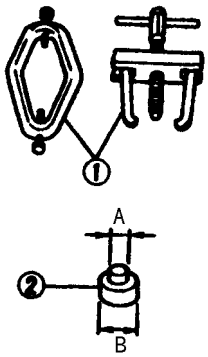

13.Weight block：

Select bearing adjusting gasket

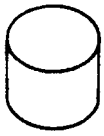

14.Revise gauge：

Select bearing adjusting gasket

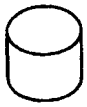

15.Differential bearing punch：

Assembly inside taper bearing

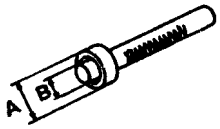

16.Punch：

Assembly rear bearing sleeve

17.Punch：

Assembly front bearing sleeve

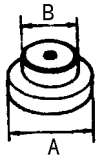

18.Punch：

Assembly rear bearing sleeve

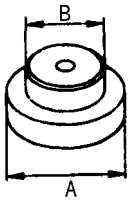

19.Bearing seat punch：

Assembly bearing seat

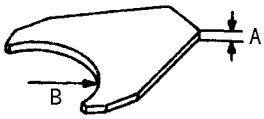

20.Bearing punch：

Assemble taper inside bearing

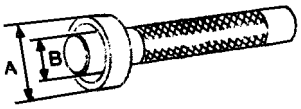

21.Bearing seat front oil seal punch：

Assembly front oil seal

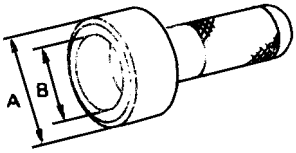

https://truckmanualshub.com/

Profeller Shaft

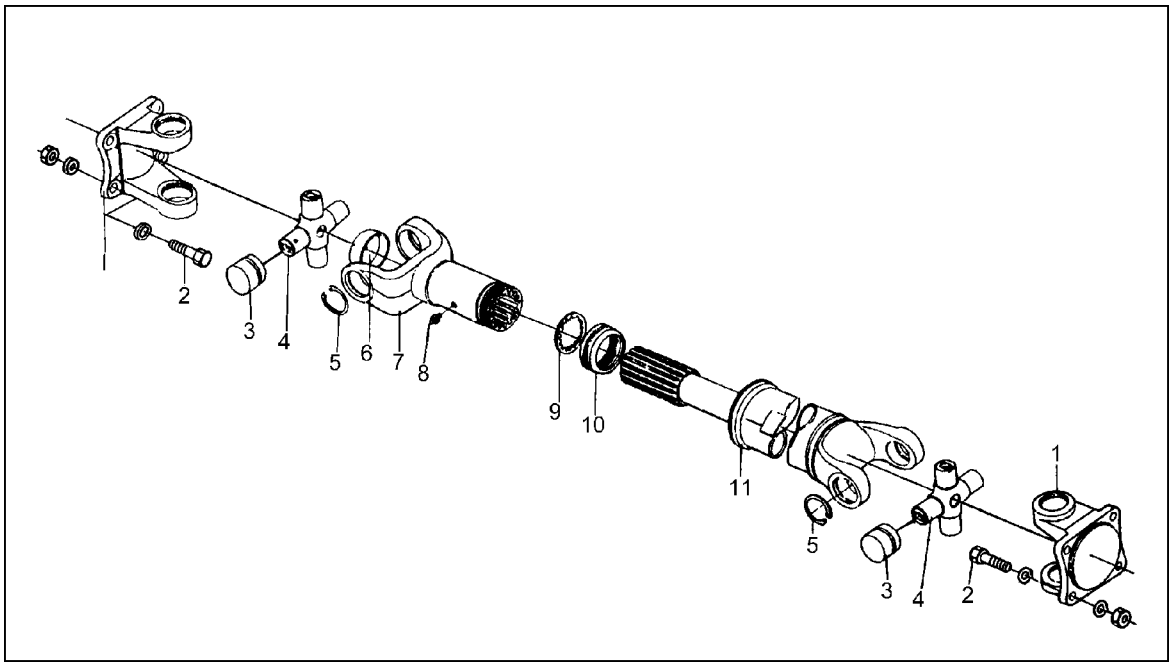

Maintain of theVehicle

Vibration on Profeller shaft

If profeller shaft vibrates when the vehicle is in high speed, check the diameter run-out of the shaft first.

. Lift rear axle.

2. Turn profeller shaft and check the diameter run-out amount of a certain point on it.

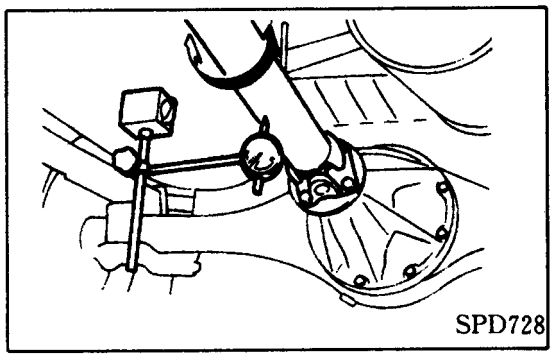

Measure point of profeller shaft （mm）：

A=155

B=165

C=185

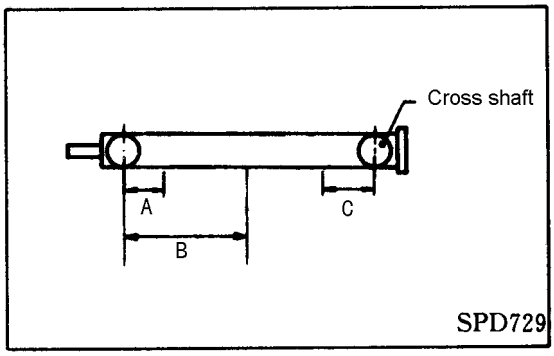

3.If diameter run-out amount exceeds the limited value, turn the connecting flange of the rear axle's one end for 180 degree, then assembly the profeller shaft.

Diameter run-out amount refers to Maintainance data and Explaination.。

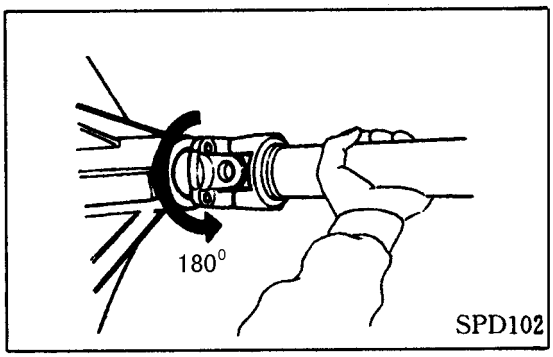

4.Check diameter run-out amount again, if it still exceeds the limited value, replace a new profeller shaft.

5. Road test.

Check the Appearance

Check weather there are any cracks or sucken holes on the surface of profeller shaft. Replace the shaft when there are any ones.

Disassembly and Assembly

Mark the flange set then disassemble the profeller shaft from rear axle's end.

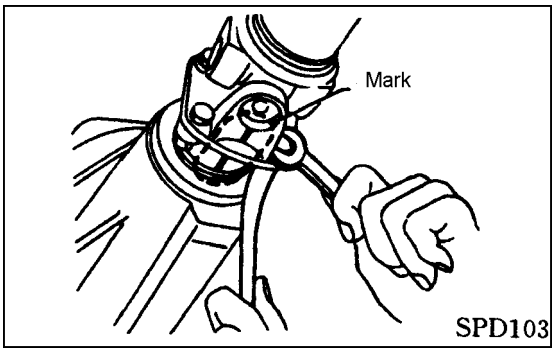

Pull the profeller shaft out of transmssion system and fill in it with a plug.

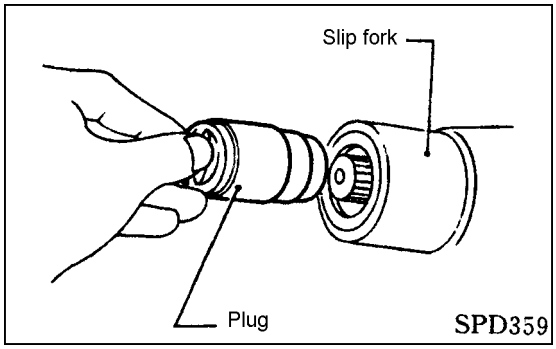

Check

Ckeck the diameter run-out amount of profeller shaft, if it exceeds the limited value, replace the shaft.

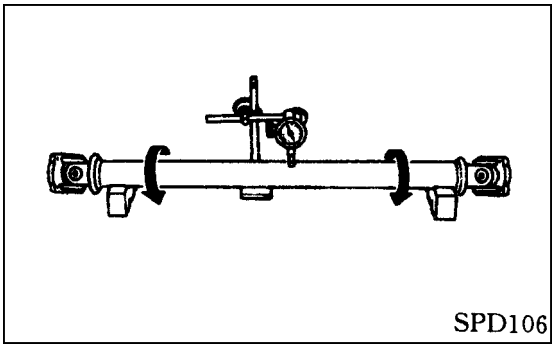

https://truckmanualshub.com/

Check the Axial Freedom Degree of Cross Axle

Replace the cross axle of profeller shaft if it's axial fredom degree exceeds the limited degree.

Axial fredom degree amount refers to Maintainance data and Explaination.

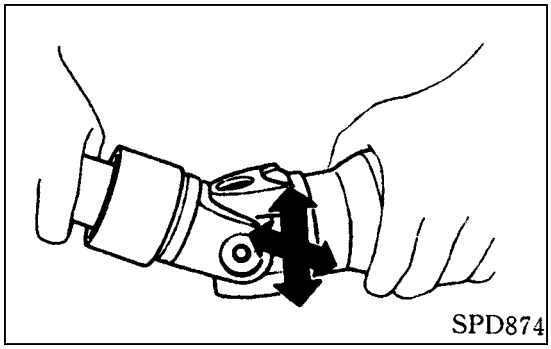

Disassembly

Disassembly cross axle.

1. Mark the profeller shaft and flange yoke.

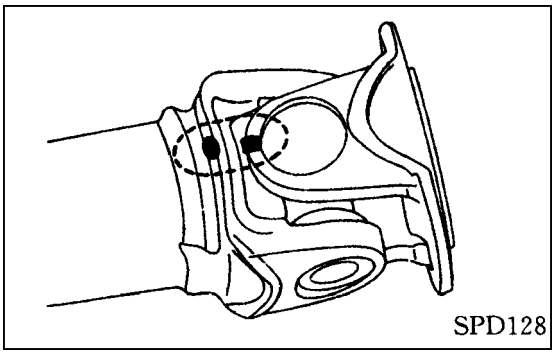

2. Disassembly the clip.

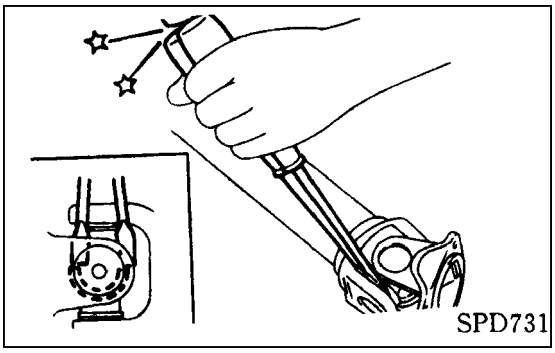

3. Knock the flange yoke with a hammer. Be careful to avoid damaging the cross axle and the hole of flange yoke when disassembly the cross axle bearing.

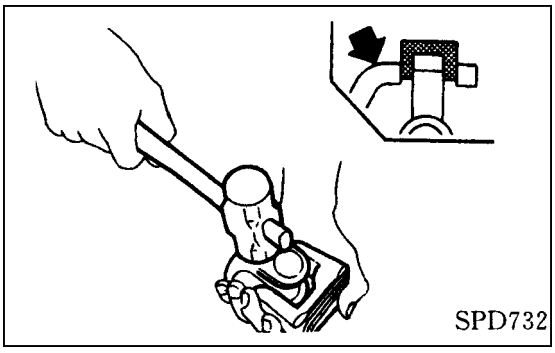

https://truckmanualshub.com/

4. Use the same approch to disassembly the other cross axle bearing. Mark the disassemblyed parts in order to keep their former positions in the later assemly.

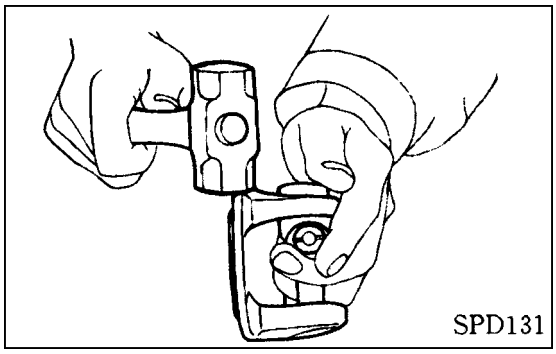

Assembly

Cross axle

1. Assembly the cross axel bearing, and lay the recommendatory multi-purpose grease on the inner side of bearing.

Do not loose any needles in the needle bearing when assembly it.

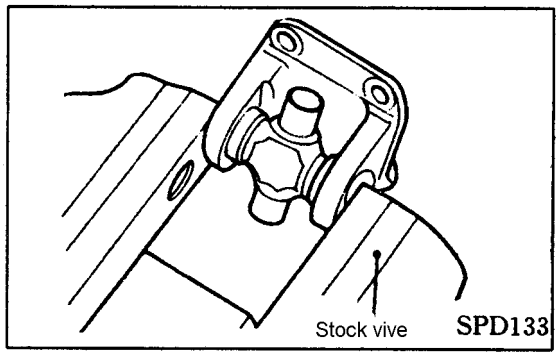

2. Select a clip which could meet the demand of cross axle's axial clearance, then assembly it. The thickness difference value should be within 0.06mm.

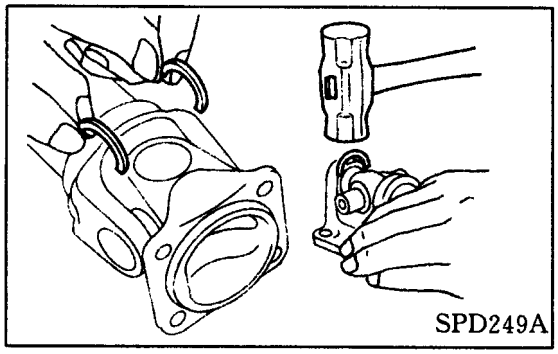

3. Knock the flange yoke to elimate the clearance between bearing and clip.

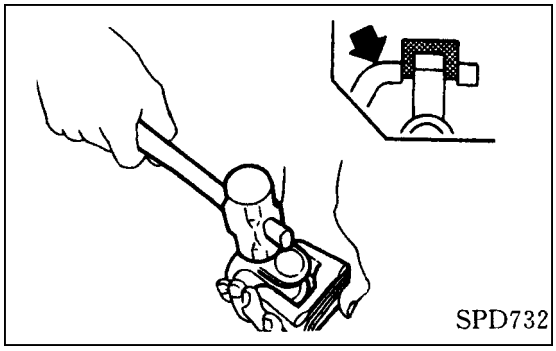

https://truckmanualshub.com/

4. Check agility and axial freedom degree of cross axle.

Axial freedom degree refers to Maintainance data and Explaination.

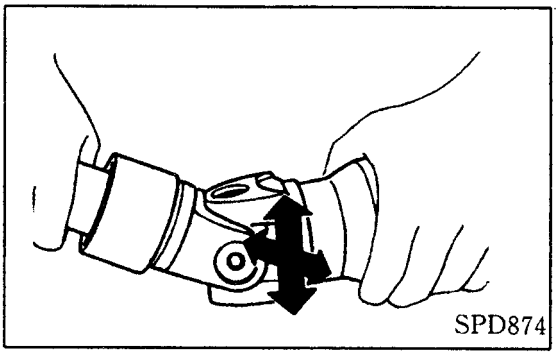

https://truckmanualshub.com/

Maintainance

Replace Front oil Seal

Attention:

For drive system, adjustable washers are used. Afer disassembly flange, the preload force of bearing has to be adjust. Therefore final gear needs to be checked.

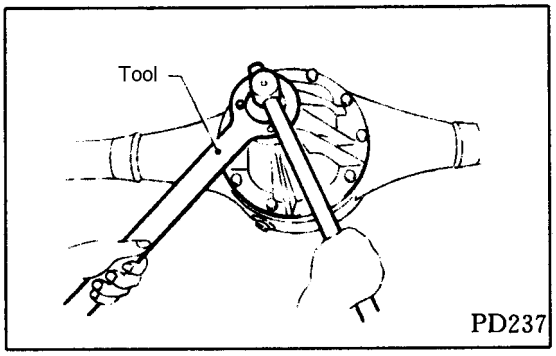

1 .Disassembly profeller shaft.

2. Release lower nut.

Tool amount refers to Preparation

3. Disassembly connecting flange.

4. Disassembly front oil seal.

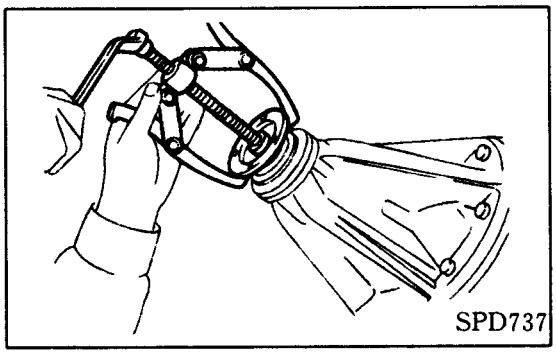

5. Afer fill the cavum of oil seal with multi-purpose grease, insert oil seal seat.

6. Assembly flage set and drive gear nut.

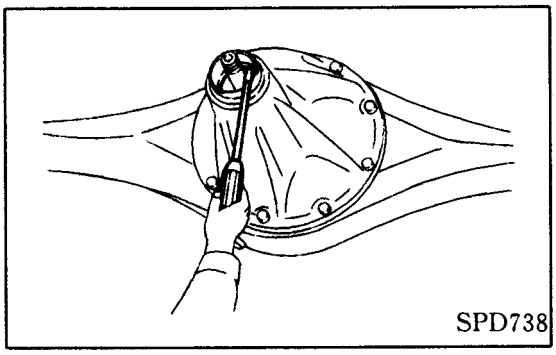

7. Assembly profeller shaft.

Tool refers to Preparation

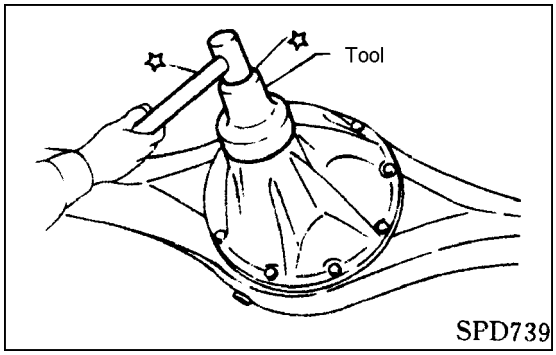

https://truckmanualshub.com/

Disassembly and Assembly

Disassembly

Disassembly profeller shaft

After disassembly profeller shaft, stuff the ouput port of trassmition case with a plug.

Disassembly axle casehalf shaft. (Refer to rear axle part)

Attention：

When disassembly profeller shaft,take care to aviod damaging splin, socket flange yoke and oil seal.

Assembly

Fully Inject the recommendatory gear lubricating oil.

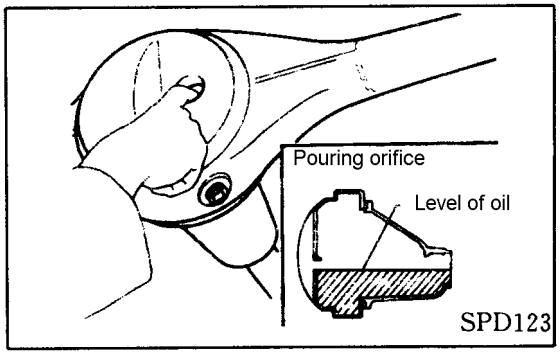

https://truckmanualshub.com/

Drive Gear

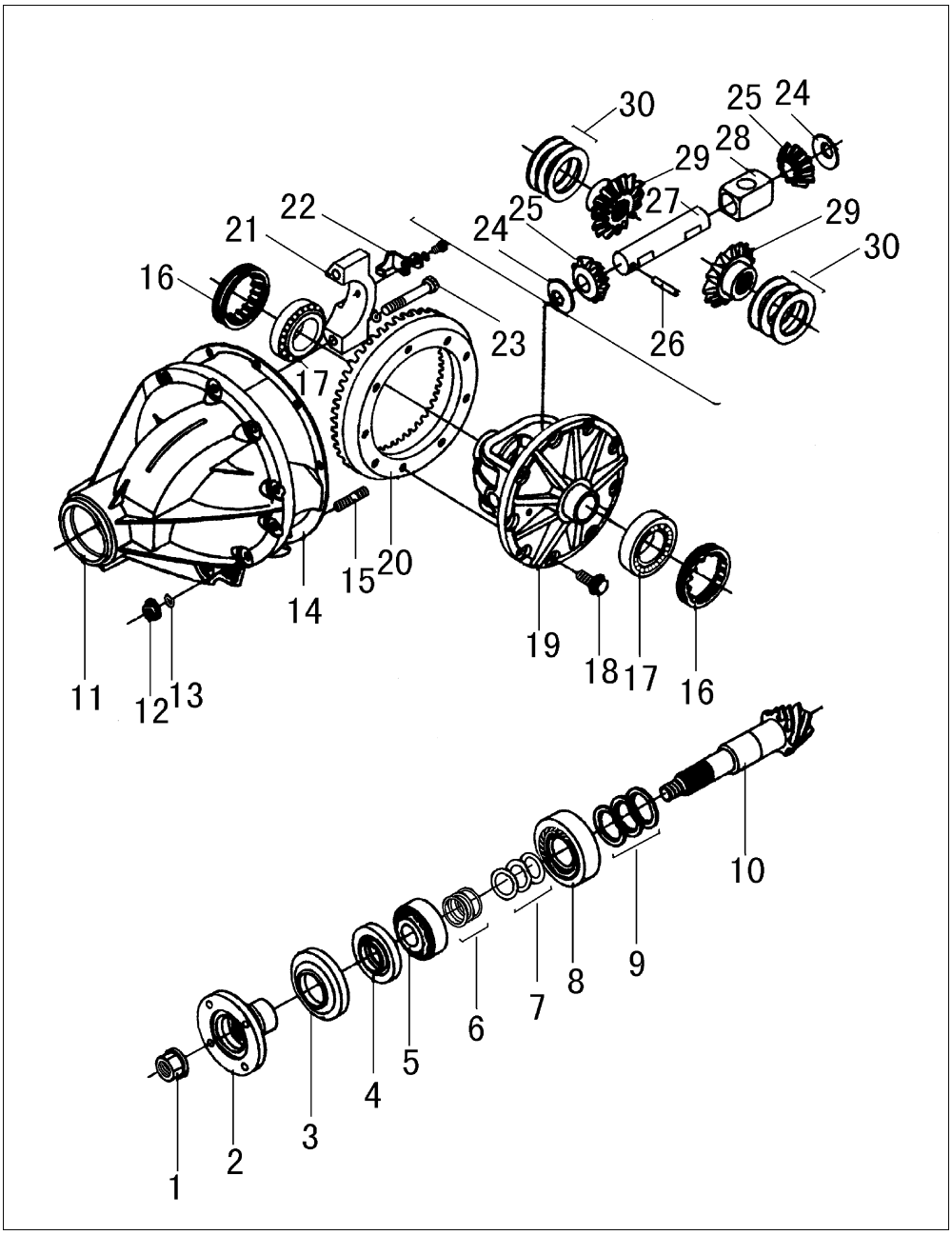

1.Hex nut	11.Rear asle final drive housing	21.Differential bearing
2.Flange	12.Flange nut	22.Stop spacer
3.Dust thround	13.Spring washer	23.Bolt
4.Oil seal ass'y	14.Gasket	24.Supporting washer
5.Driving conic gear bearing	15.Adjusting nut	25.Planetary gear
6.Adjusting gasket	16.Adjusting nut	26.Spring pin
7.Adjusting sleeve	17.Inside/outside track	27.pin of planetary gear
8.Driving conic gear bearing	18.Bolt	28.Half shaft thrust block
9.Adjusting gasket	19.Bevel gear differential housing	29.Half shaft gear
10.Driving conic bevel gear	20.Sub-driving conic bevel gear	30.Supporting washer

Disasembly

Pre-check

Before disassembly drive differential, check the following:

Preload force

1）Turn drive gear for several times to put bearing in its right position.

2） Use tool check the preload force.

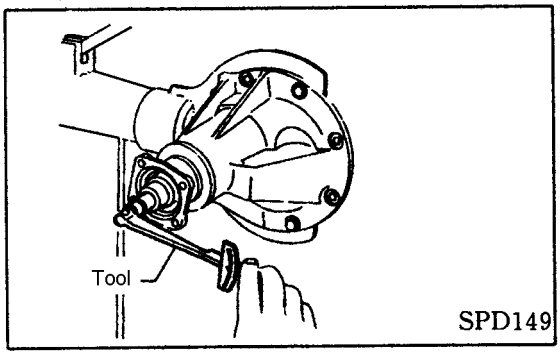

Clearance between driven gear and drive gear.

Measure the clearance of main reduct gear at different points with a micrometer gauge.

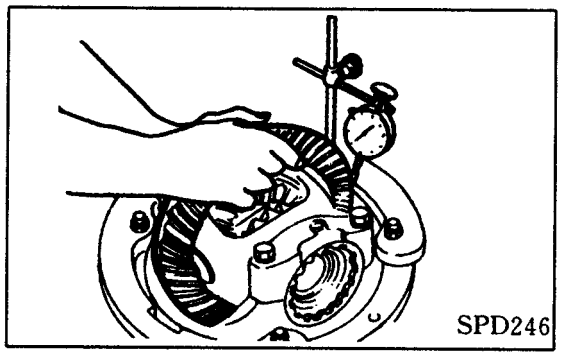

Radial run-out of driven gear

Measure the radial run-out of driven gear with a micrometer gauge.

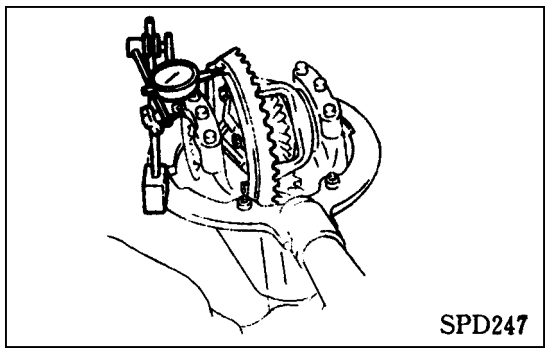

Gear contact area

Checking of gear contact area refers to Adjusting.

Clearance between half shaft gear and planetary gear.

Use a thickness gauge to measure the clearance between the thrust gasket of half shaft gear and differential housing.

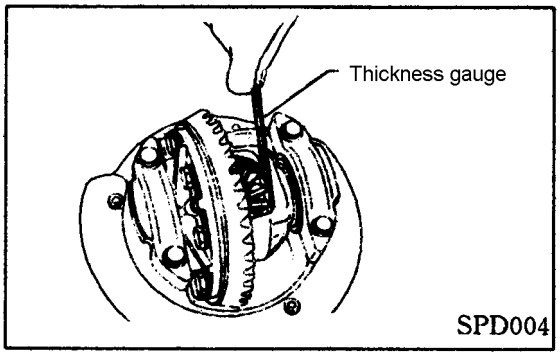

https://truckmanualshub.com/

Differential

1 .Fixing main differential ass'y by tool.

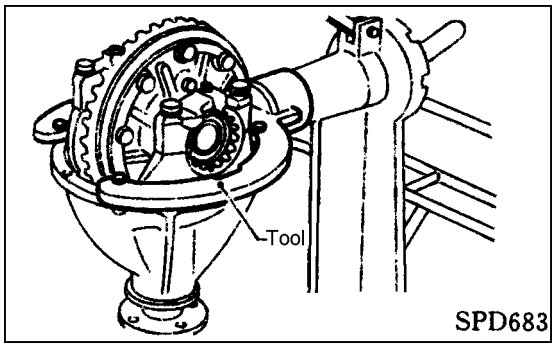

2 .Mark the seat of hakf shaft bearing with paint or a special tool to avoid mistaking in reassembly.

Since the bearing seat is linear bored in machining, it should be in its former position when reassembly it.

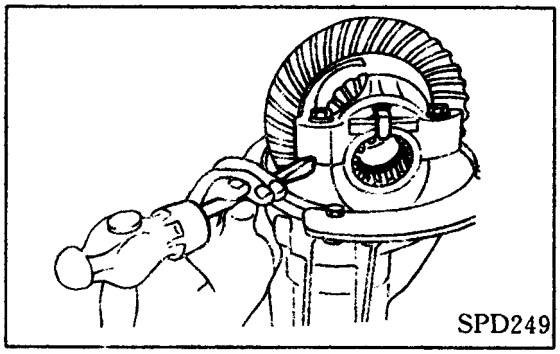

3.Diassembly locking pin of lower half shaft and bearing seat of half shaft.

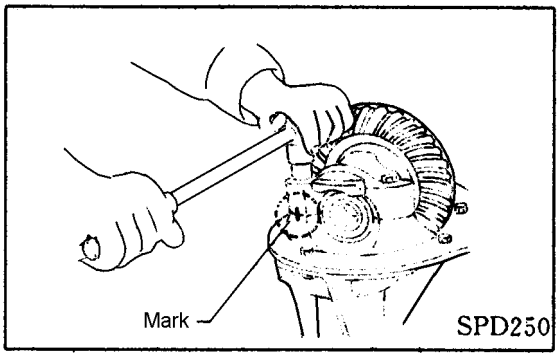

4 .Disaaembly adjusting spacer of lower hafl shaft by tool.

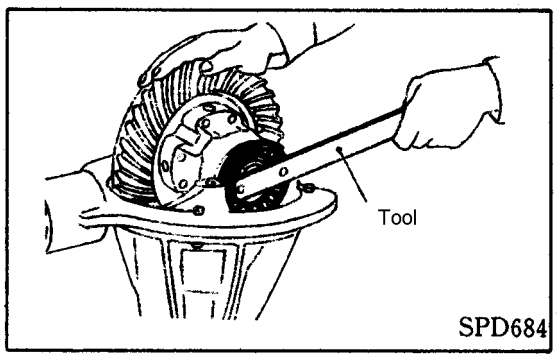

https://truckmanualshub.com/

5. Disassembly differential housing ass'y by a tommy bar.

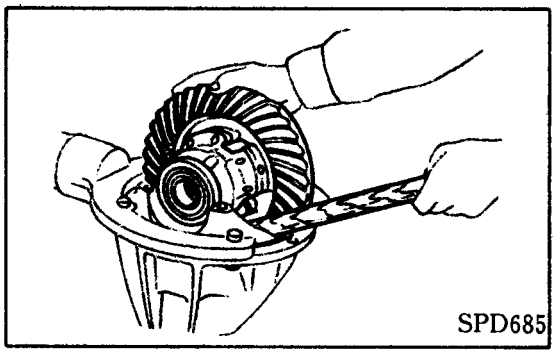

Pay attention that seperate the outside track of bearing and taper in right and left respectively--in order not to mistacken them.

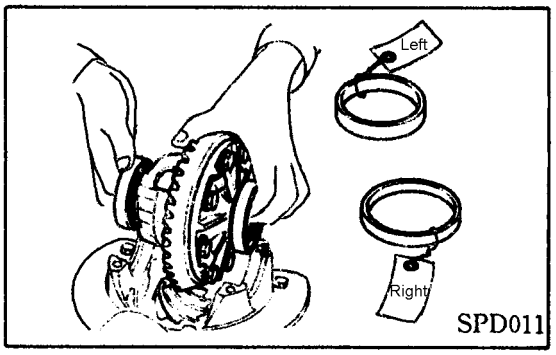

6. Diassembly nut of drive conic gear by tool.

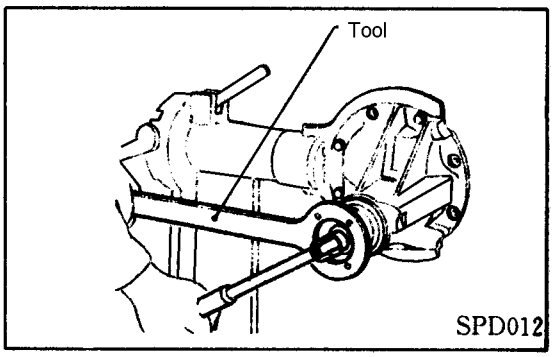

7. Disassemby connecting flange by tension implement.

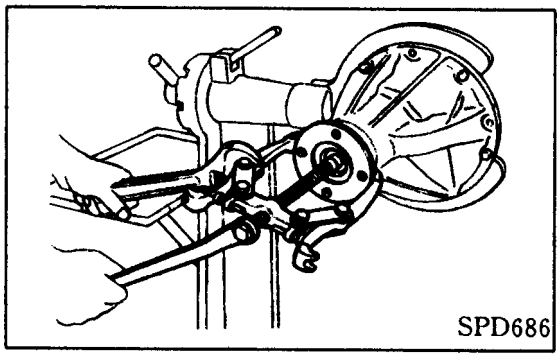

https://truckmanualshub.com/

8. Take off drive conic gear, its rear inner conic bearing, bearing seat and adjusting gasket of bearing together.

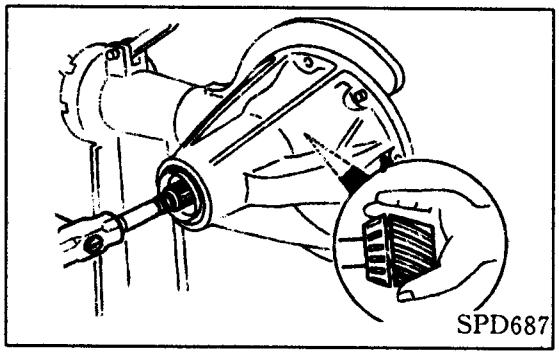

9. Disassembly front oil seal and front conic bearing.

10.Disassembly outside track of gear bearing by a brass stick.

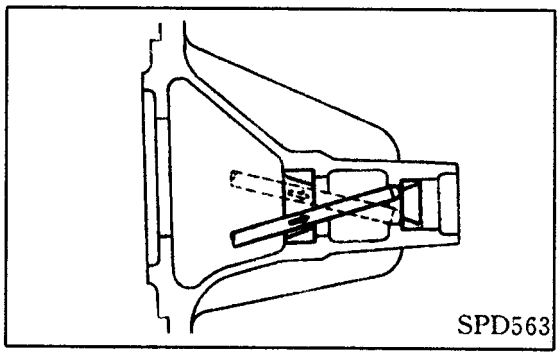

11.Disassembly inner conic bearing of drive conic gear and adjusting gasket.

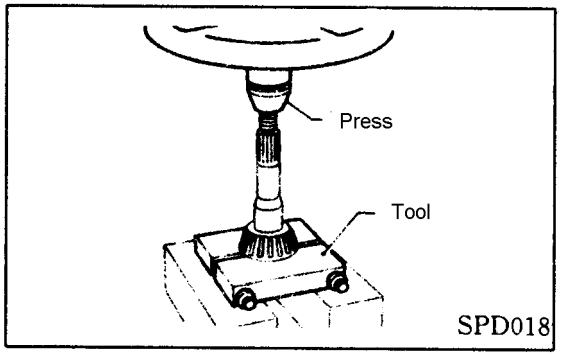

Differential Housing

1 .Disassembly inner conic bearing of half shaft.

Pay attention not to damage bearing or engaging key.

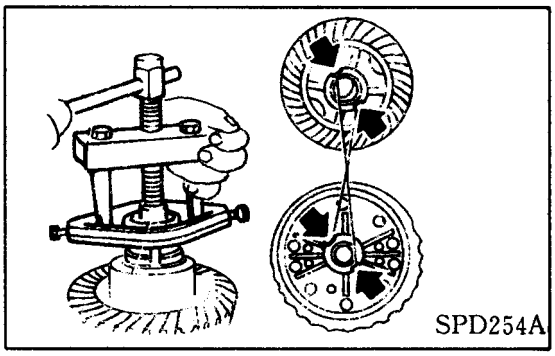

https://truckmanualshub.com/

Pay attention not to mistake left and right bering parts.

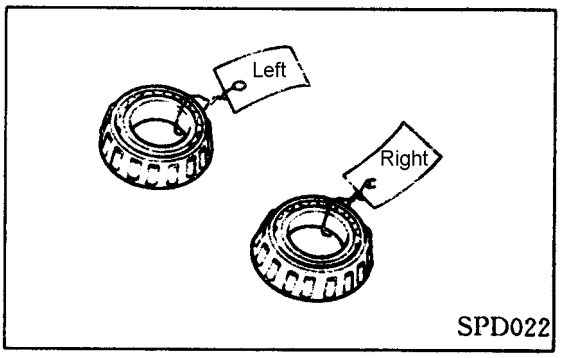

2 .Loose bolt of driven gear by tool.

3 .Knock driven gear by soft harmmer, then disassembly the gear from differential housing.

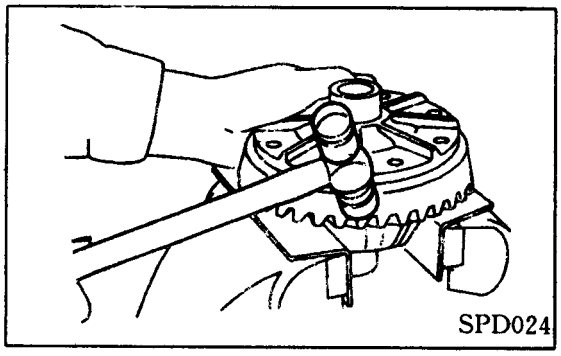

4 .Take off cross locking pin from the side of driven gear by punch.

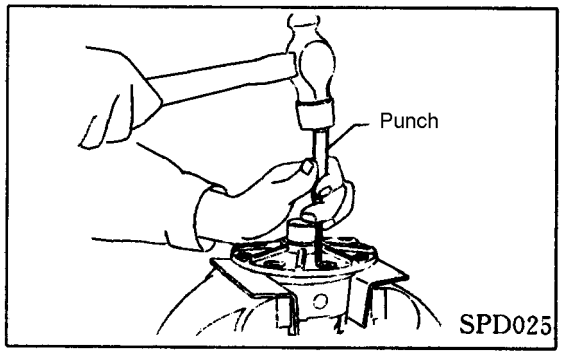

5 .Disassembly differential housing and mark on left and right differential housing.

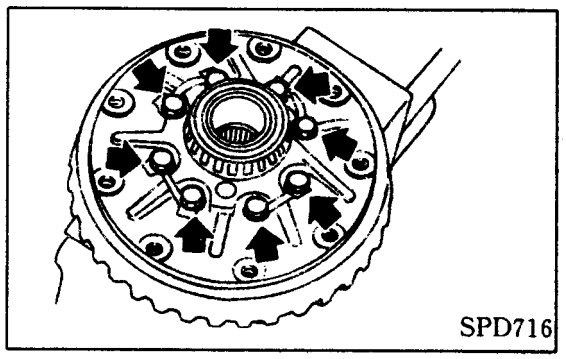

https://truckmanualshub.com/

Check

Driven Gear and Drive Gear

Check whether there are any nicks, cracks or chippings, if there are some obvious damage, must replace the gears together.

Differntial Housing Ass'y

Check the assembly surface of differential housing,bearing of half shaft, planetary gear, shaft of planetary gear and thrust washer.

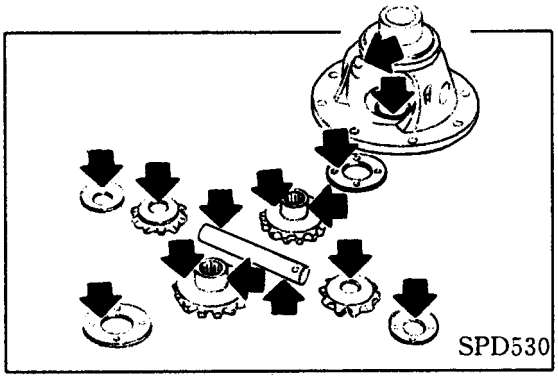

Bearing

1. Wash bearing completely.

2 .Check the abrasion, scratch, hole or scall off situation of bearing. Check the drive agility of conic rolling bearing. If there are any damage, replace outside track of bearing and inner taper together.

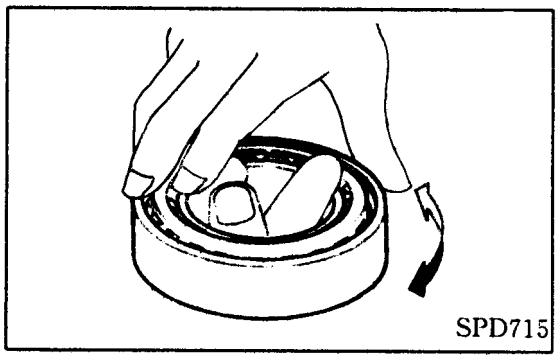

Adjusting

Gear Contact Area

To proof whether the driven conic gear and drive conic gear mesh correctly, the shape of contact area should be checked. If the hyperbola gear mesh mesh incorrectly, it will cause noise and shorten the duration of the gears. By checking the shape of contact area and adjust the gears to their best meshing position, it will reduce noise and increase the duration of the gears.

1. Wash the gears of driven conic gear and drive conic gear completely.

2 .Select 3~4 gears of driven gear which are near drive gear and wipe a flat of ferric oxide.

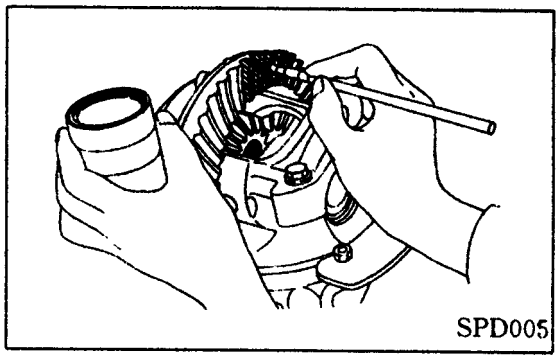

3 .Turn connecting flange by hand to turn driven conic gear positive and negative.

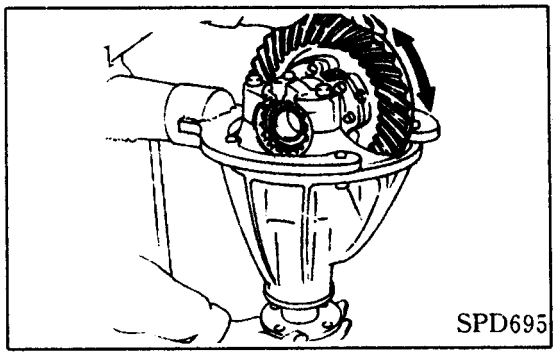

If the caculated clearance value and the thickness are correct, the shape of gear contact area will be normal. But generally because of the wrong shape of contact area, it has to repeat the mentioned process above until adjuting to the correct way. Several shapes of gear contact area and adjust approches are showed .

A.Adjust approch：Increase the thickness of the gasket of drive gear to close it to driven gear.

B.Adjust approch：Decrease the thickness of the gasket of drive gear to keep away it from driven gear

After adjusting, wipe up the ferric oxide.

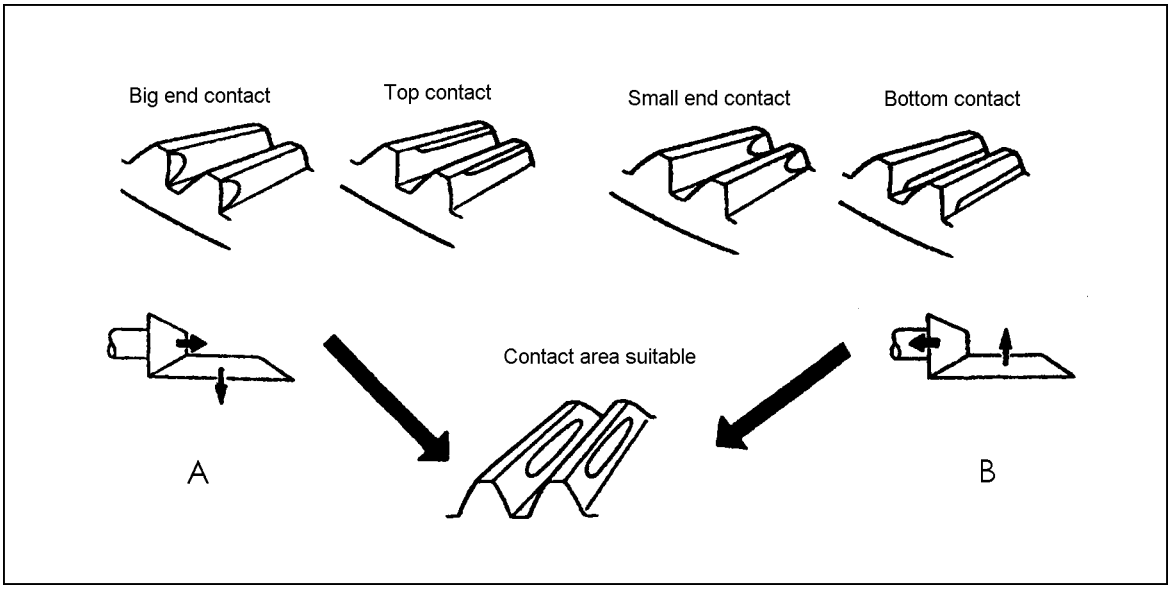

https://truckmanualshub.com/

Assembly

Differential Housing

1. Assembly gear of half shaft, planetary gear, planetary gear set and thrust spacer.

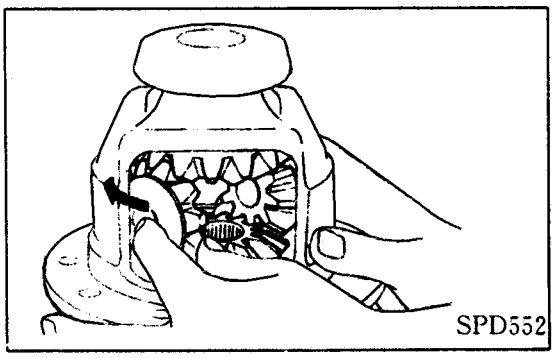

2. Incert the planetary gaer shaf into differential housing and contact it to the hole of locking pin.

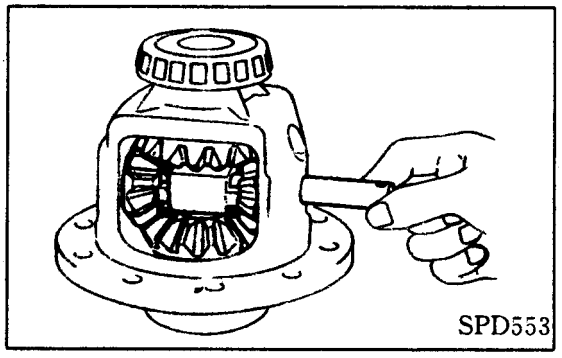

3. Select thrust spacer of half shaft gear and adjust clearance between the back side of half shaft and thrust spacer.

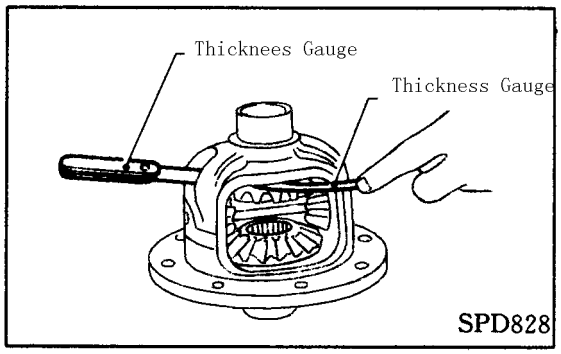

4 .Assembly the locking pin of planetary gear by punch.

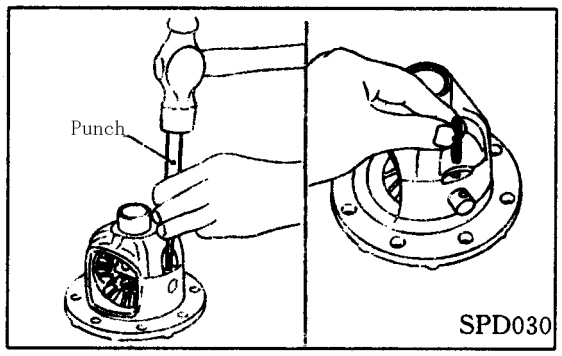

https://truckmanualshub.com/

5. Put gear oil on the surface of gear and check the running situation of gear.

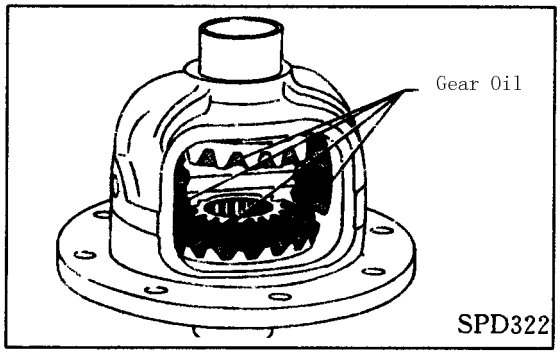

6. Put seal glue on differential housing and the surface of driven gear's contact area, then put the differential housing on the main reducer driven gear.

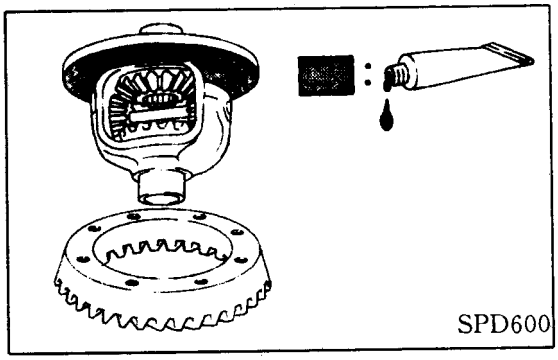

7 .Put seal glue on the bolt of driven gear.

8 .Assembly new locking spacer and bolt.

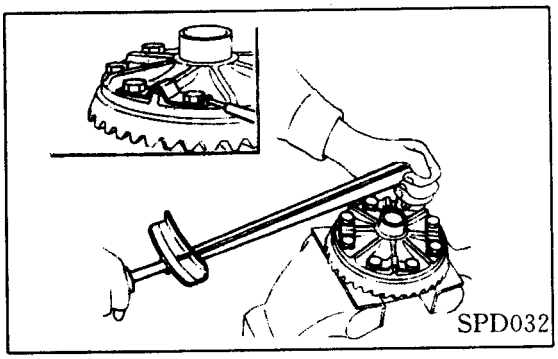

Screw down bolt by tool and knock the head of bolt by hammer softly.

Bend the locking spacer to lock the bolt in the tight position.

9. Assembly the inner taper of half shaft bearing on differential housing by tool.

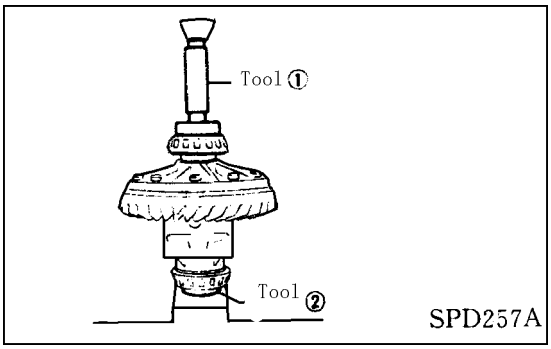

Differential Seat

1 .Assembly the outside track of front and rear bearing.

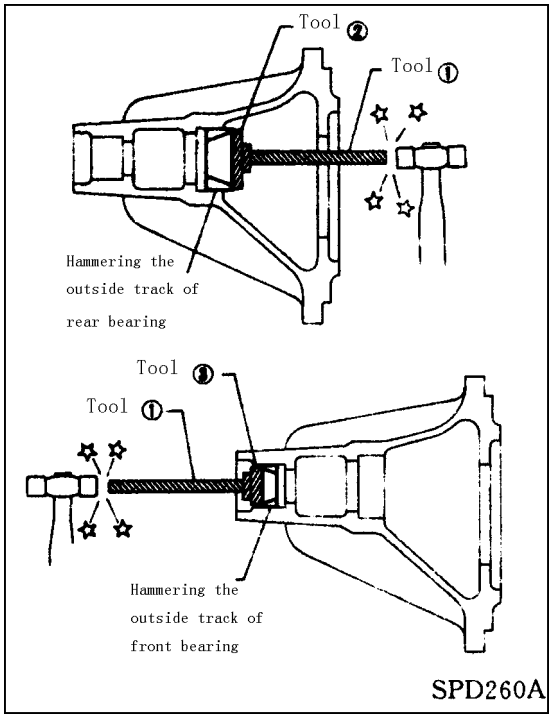

2 .Select adjusting gasket of drive gear. Refer to the explaination of adjusting.

3 .Assembly adjusting gasket of drive gear, insert the inner taper of drive gear's rear conic bearing by tool.

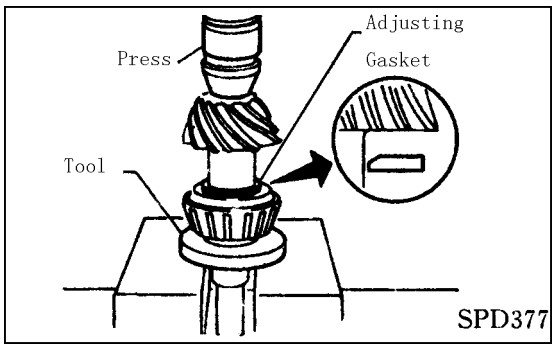

4. Assembly the inner taper of drive gear's front conic bearing.

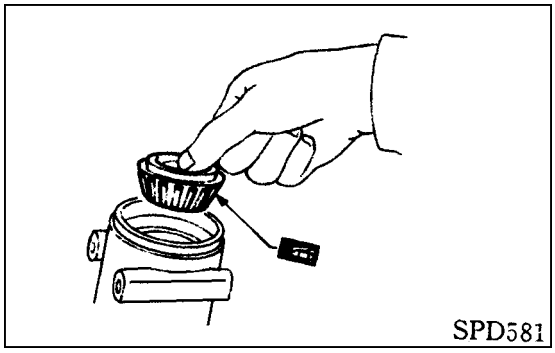

https://truckmanualshub.com/

5. Put universal grease in the cavum of oil seal' s lip. Assembly front oil seal.

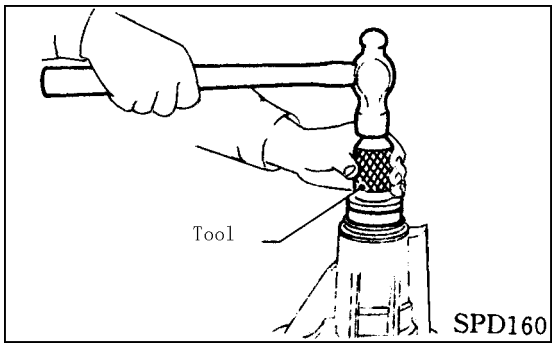

6. Reassembly bearing gasket of drive gear, adjusting gasket of bearing and drive gear on gear seat.

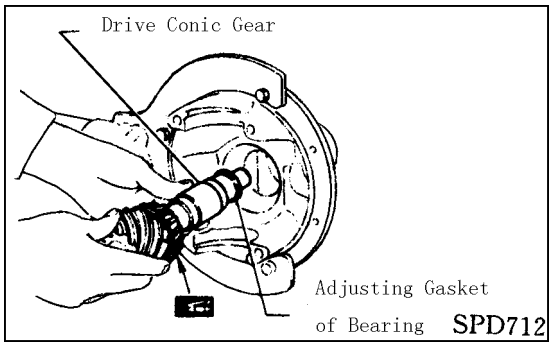

7 .Knock connecting flange by soft hammer softly and assembly the flange on drive gear.

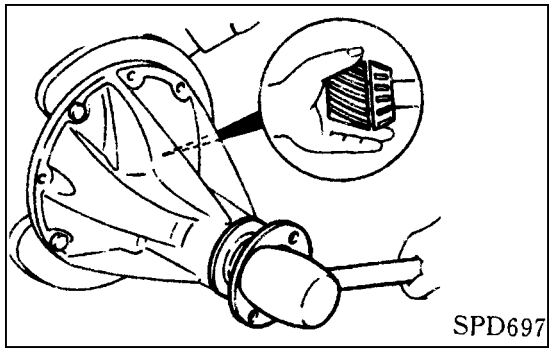

8 .Tighten the nut of drive gear by prescriptive torque.

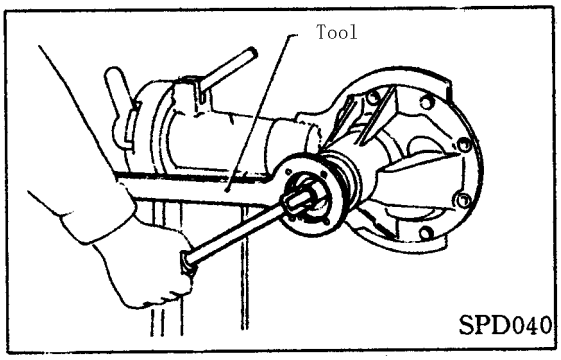

https://truckmanualshub.com/

9 .Turn driver gear repeatly and measure the preload of the drive gear bearing.

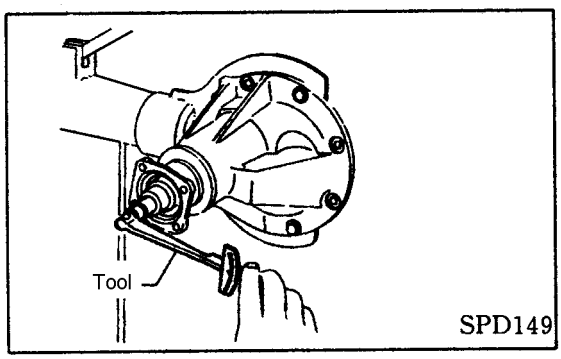

10.Assembly the differential housing which has the outside track of half shaft bearing into the gear seat.

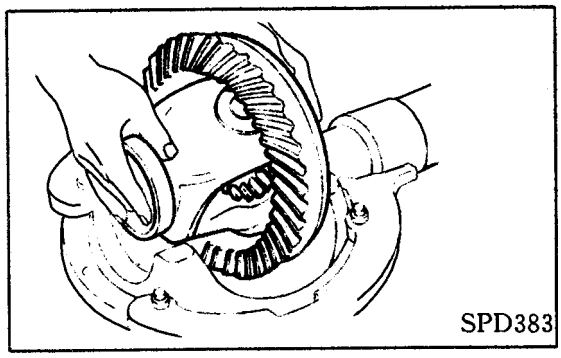

11.Turn adjusting gasket softly by special tool to lay the gasket on a suitable screw thread connecting position of gear seat.

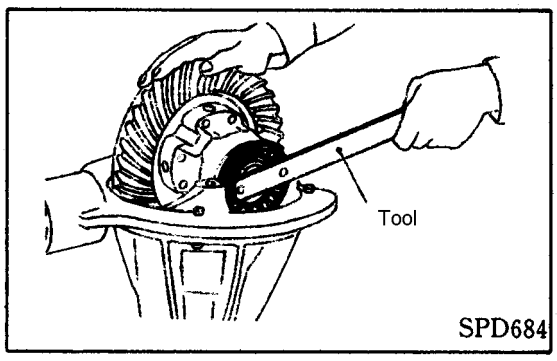

12.Point at the marks on bearing cover and gear seat, then assembly the bearing cover.

Do not screw too tight to lock the adjusting gasket of bearing.

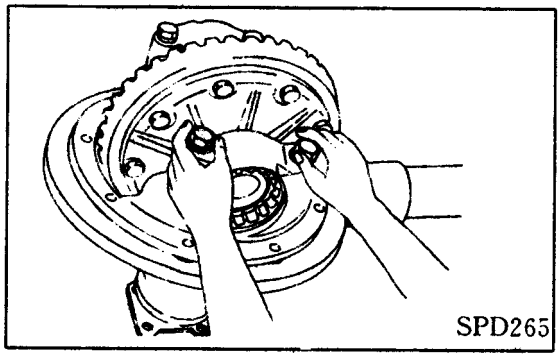

https://truckmanualshub.com/

13.Tighten the left and right gasket of half shaft bearing one by one and measure the windage and preload force of driven gear. Tighten the left and right gasket in turns to get the prescripive windage and preload force.

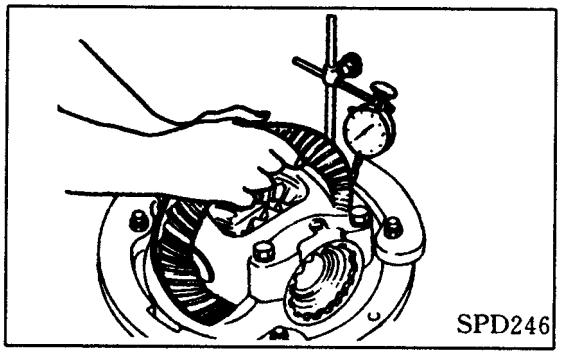

When check preload force, turn the drive conic gear repeatly to lay bearing in the right position.

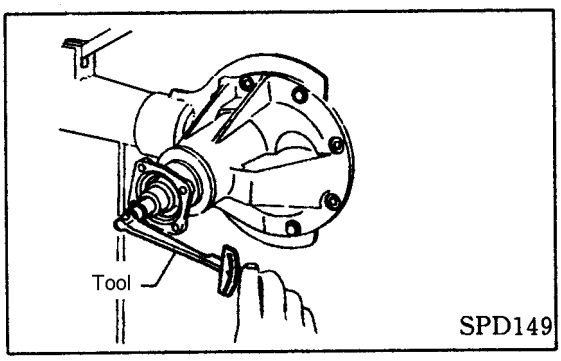

14.Tighten the bolt of half shaft bearing's seat.

15.Assembly lateral locking pin.

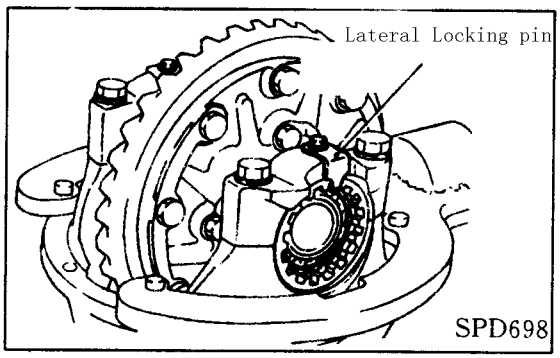

16.Check the radial run-out of main reducer driven gear (by micrometer).

If the difference of clearance on different position is great, it may caused by other reasons beside driven gear and differntial.

If the radial run-out amont of driven gear is inner the prescriptive range while the clearance of differential housing on different position is great, replace the drive and driven gear or differential housing.

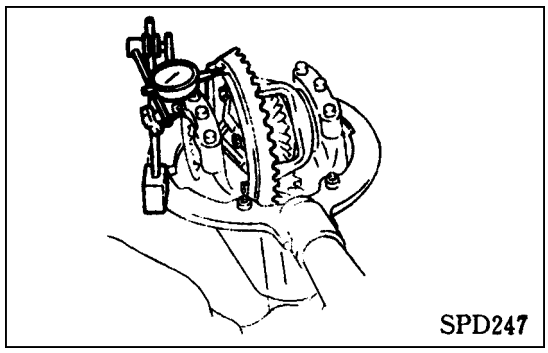

17.Check gear contact area (refer to the explanation of adjusting).

Maintainance Data and Explaination

Profeller Shaft

General Explaination

Wheelbase mm：2515

Rear wheel：Single wheel

Type of rear axle：Single class hyperbola conic main reducer differential, punch jointing axle housing

Type of profeller shaft：Single, open

Amount of tie-in：2

Main Differential

Gear ratio：4.875

（Provided by JMC）

https://truckmanualshub.com/

https://truckmanualshub.com/

Steering System

ST

TOC

Notes..... ST-1
Check With the Vehicle..... ST-2
Steering Wheel and Steering Column..... ST-3
Steering Gear..... ST-6
Steering Tie-rod..... ST-7
Power Steering System..... ST-10
Maintenance Data and Explanation..... ST-11

https://truckmanualshub.com/

Steering System

Notes

• Before disassembling, please clean external surface of the parts carefully.

• Disassemble the parts in a clean working area to prevent any dirt and other objects from entering.

• Put the disassembled parts in order for later reassembling.

• Clean the parts by using nylon or soft paper, normal shop cloth will cause some remains on the parts to interfere the movement.

• Before check or assembly, clean all the parts carefully with liquid.

• Before assembly, it is better to apply a layer of oil used for auto transmission on the surface of hydraulic parts, and apply a layer of vaseline on the O-type oil seal instead of lithium lubricanting grease.

• Replace all the washers, oil sealing and O-type rings to avoid using damaged washers, oil sealing and O-type rings in assembling. After the assembly, proceed a test-run for property.

Special Maintenance Tools

Tool Name	Brief Description
Pulling tools, steering wheel	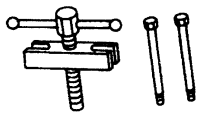 Disassemble the steering wheel
Ball connection separator	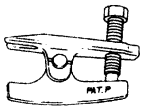 Release the ball connection
Pulling tools, steering arm spanner	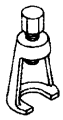 Disassemble the steering arm
Lock nut wrench	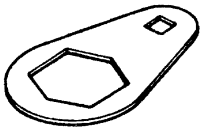
Spanner, adjusting screw	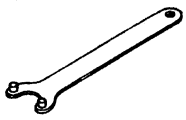 Adjusting and tightening the lock nut
Torque spanner	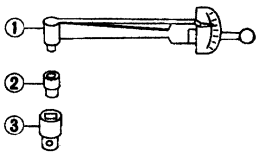 Measuring the torque

https://truckmanualshub.com/

Tool Name	Brief Description
Accessories, bracket and steering gear casing	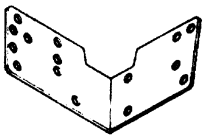 Installing the steering gear on it
Torque connecting end	Adjusting the preload of worm bearing

Check with the Vehicle

Check the free play of the steering wheel

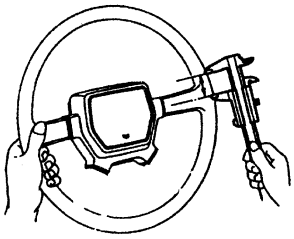

• Measure the free play when steering wheel is in central position (driving straight).

Free Play Value: ≤ 35mm

•If not within this value, check whether the gear clearance and rod ball pin of steering gear for any loose.

Check the central position of the steering wheel

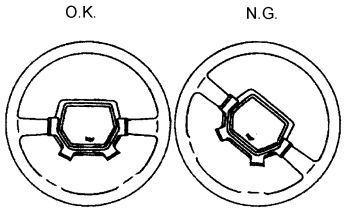

• Before disassembling the steering wheel, calibrate the central position of the steering wheel.

Check

• Check whether the steering wheel is in the central position when driving straight.

• If not, disassemble the steering wheel and reassemble it again.

• If the central position is just between two fine gears, release the lock nut of tie rod, and move the rod reversal at the same distance both on the left and right to compensate the difference of the central position.

Check turning Angle of the Front wheel

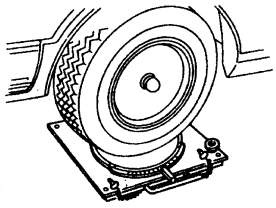

• Turning the steering wheel to on both left and right extreme to measure the turning angle of the front wheel.

Inner wheel	37°
External wheel	28°

https://truckmanualshub.com/

Steering Wheel and Steering Column

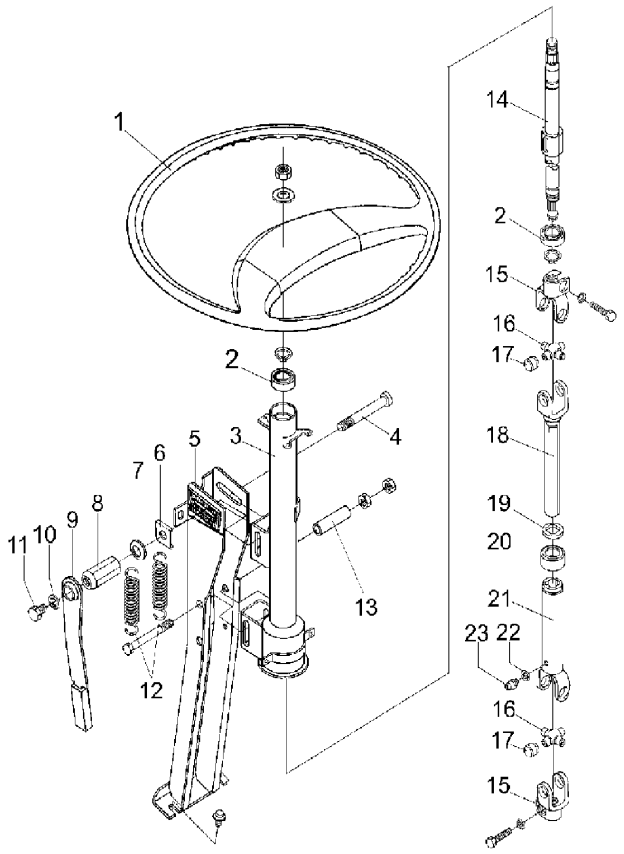

Steering Wheel

• Remove the horn button.

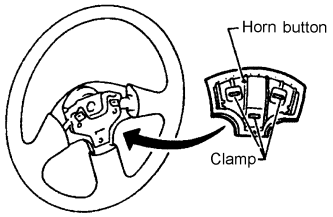

• Disassembling the steering wheel by using special tools.

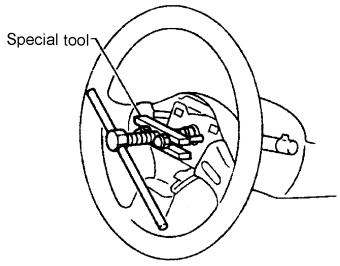

https://truckmanualshub.com/

• When installing the steering wheel, apply a layer of multi-purposed grease on the whole surface (two parts) of the automatic return-back pin of steering indicator and touch point of the horn.

• Install the steering wheel on the column shaft at the central position.

• After installing, turn the steering wheel, make sure to have a smooth movement and the same turning cycles on both left and right side at the central position.

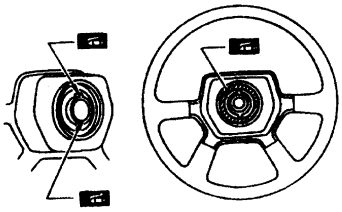

Steering Column

• When fixing the steering column, first screw all the lock bolts of lower bracket and clips with hands, and then re-tightening again to make sure no extra pressure will apply to the steering column.

• When fixing the steering spline shaft, make sure that the tightening bolts and the sunken part of the shaft are correctly faced to each other.

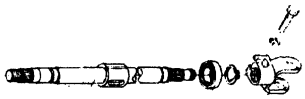

Disassembly and Assembly

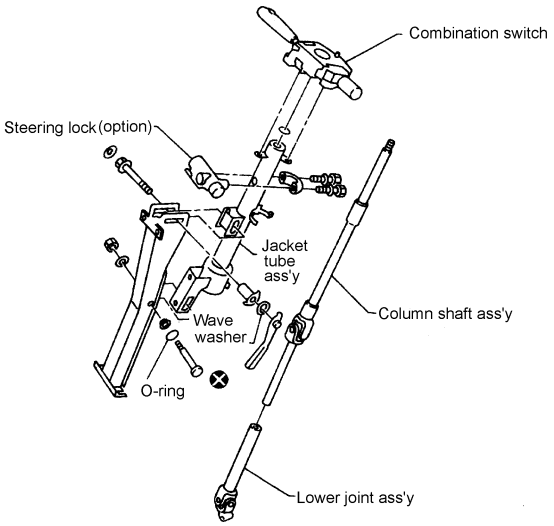

• When assembling and disassembling, turn on the steering lock with the key.

• Be sure the surface of the spring lock ring after installing faces with the shaft.

• Before putting the shaft into the sleeve, install the spring lock ring.

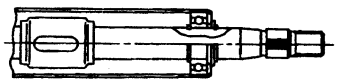

• Install the spring lock ring on the upper shaft with tools.

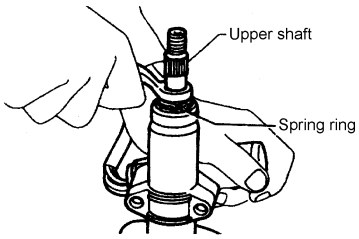

Steering Lock

a) Remove the lock screw with a clamp.

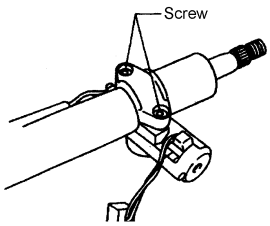

b) Tightening the lock screw.
Notes:
Pay attention to whether the position of the steering lock mechanism is correctly located.

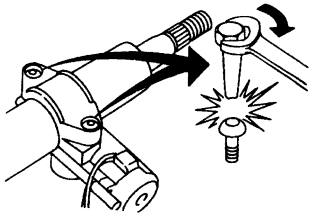

Adjusting the Mechanism

•After installing the steering column, check the movement of the adjusting mechanism.

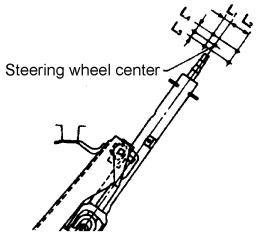

Front, Rear

L1: 15mm

L2: 45mm

Upper, Lower

L3: 10mm

L4: 20mm

Check

• If the steering wheel could not turn smoothly, check the steering column from the following aspects, and replace relevant damaged parts.

Check whether bearing of the steering column is damaged or uneven, lubricate it with recommended common grease. If necessary, replace the steering column assembly.

Check whether the sleeve is deformed or damaged, replace it if necessary.

If the vehicle is hit a little, check the dimension of L. If the L value is ont in the required range, replace the steering column. L: 484mm

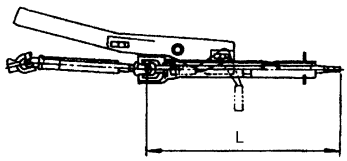

https://truckmanualshub.com/

Steering Gear

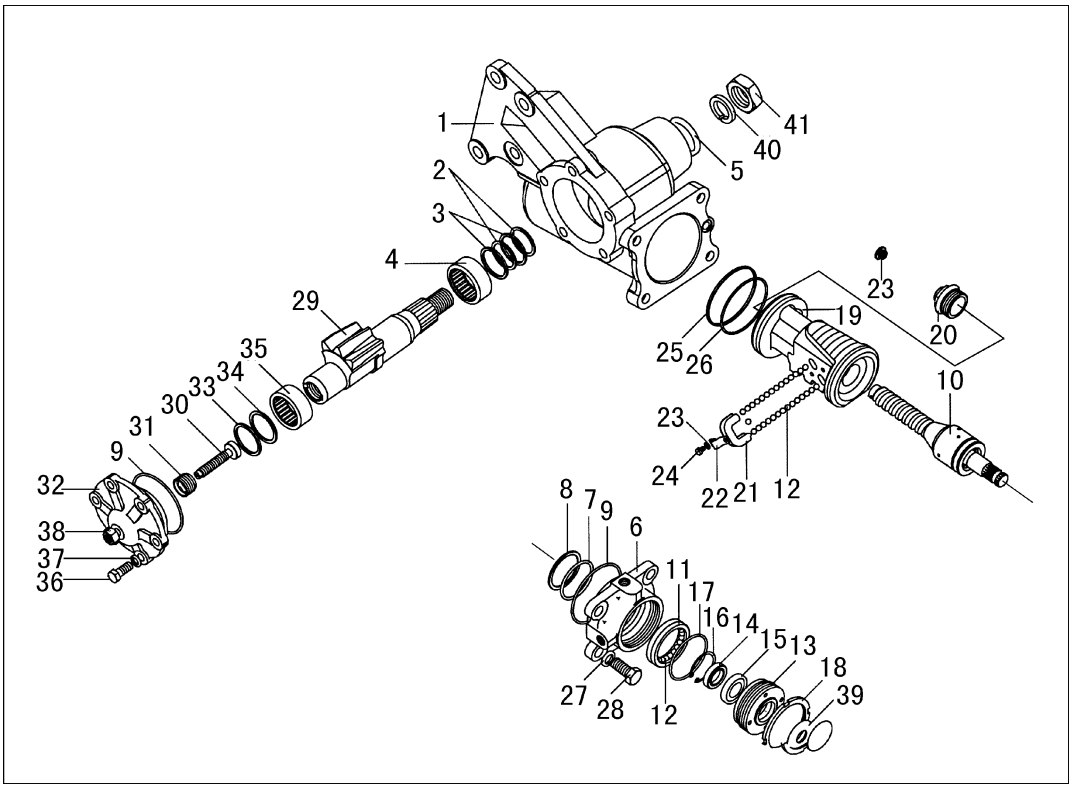

1.Hex neck bolt
2.Spring washer
3.Hex nut
4.Side cover
5.O rubber sealing ring
6.Retaining nut
7.Adjusting bolt
8.Retaining ring
9.High pressure sealing ring
10.Needle bearing
11.Steering arm shaft
12.Cone plug
13.Housing
14.O rubber sealing ring
15.Dustproof
16.Spring washer
17.Hex thin nut
18.Casing cap
19.Sealing ring
20.O rubber sealing ring
21.Steering nut
22.Steel ball
23.Steel ball duct
24.Spring washer
25.Cross-recessed flat round head screw
26.Duct clip
27.Steering screw lever
28.Cylinder pin
29.O rubber sealing ring
30.Torsion bar
31.Valve pocket
32.Needle bearing
33.Cylinder pin
34.Imput shaft
35.Cylnder pin
36.Steel ball
37.Outside ring
38.Sealing ring
39.O rubber sealing ring
40.O rubber sealing ring
41.Valve body
42.Big cone joint
43.Circlip for holes
44.Single annular ball bearing
45.Oil seal
46.O rubber sealing ring
47.Upper cover
48.Retainer nut
49.Dust cap

https://truckmanualshub.com/

Steering Tie-rod

Disassembly and assembly

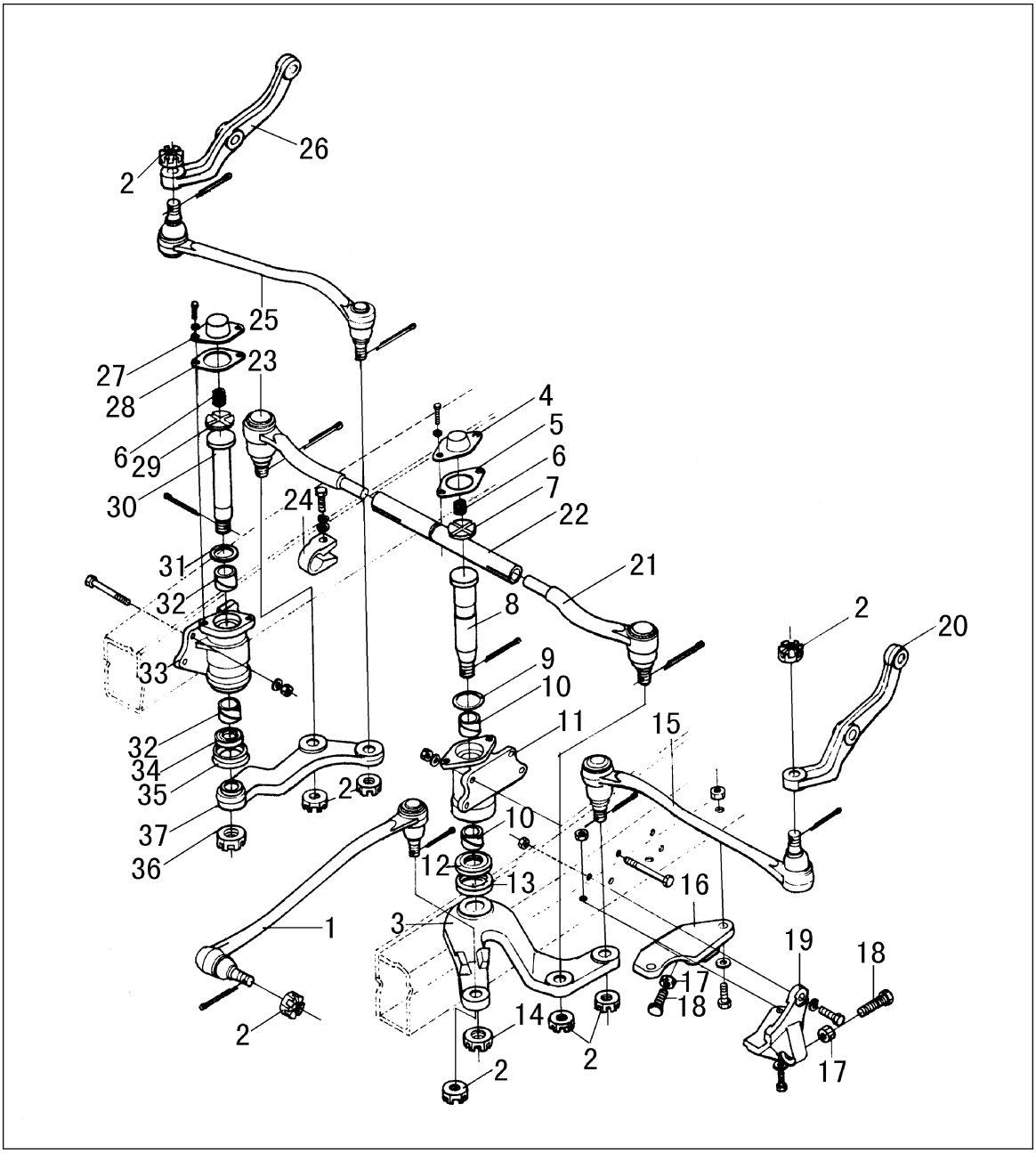

1.Remove the cotter pin and nut from the tie-rod connecting part, and then make use of proper tool to separate steering knuckle arm from tie-rod.

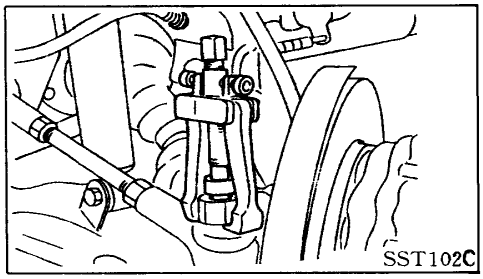

2.Make use of proper tool to release the ball pin connection part like connecting pull rod, etc.

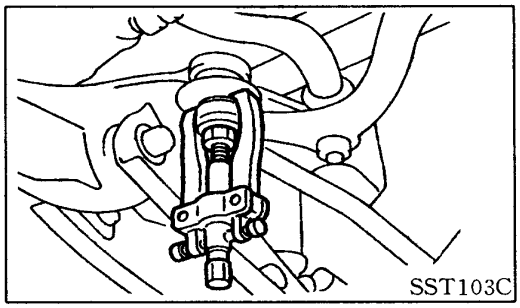

3.Remove the drag link from the steeringdrop arm by use of tools.

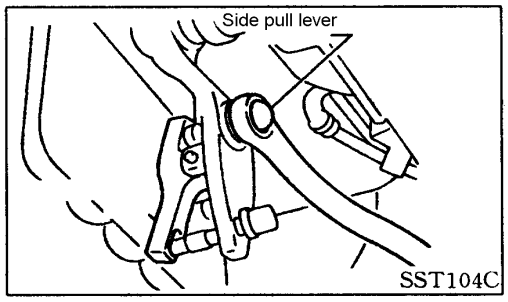

4.Remove the fixed bolt of front and rear limit bracket.

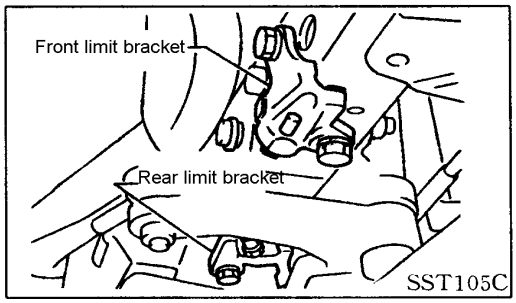

Intermediate pull rod and tie-rod

1.When disassemble the tir-rod ball head connection, adjust the pull rod length.

Adjust it betwen the ball head bolt center.

Standard length: See "Maintenance data and explanation"

2.Lock the fixed nut of the tie-rod to assure the consistent motion of two ends.
Note:
To assure the connecting pull rod screw up to 40mm length in the tie-rod pipe.

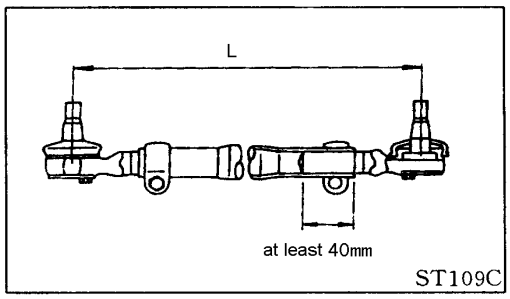

https://truckmanualshub.com/

Check

Ball head pin assembly

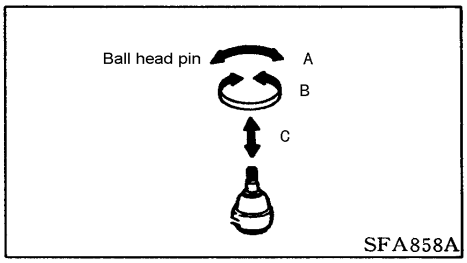

1.Check the ball head pin travel. If there is damage, too large axial clearance or hard move of the ball head pin, replace the ball head pin assembly.

Transverse swing force(measuring point: cotter pin) A:

See "Maintenance data and explanation".

Driving moment B:

See "Maintenance data and explanation".

Axial clearance C:

0mm

2.Check the working condition of the dust proof. If it had been damaged, replace immediately.

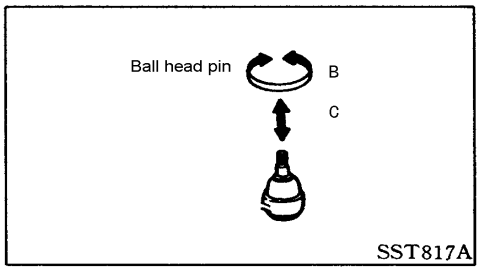

a.When replacing the dust proof, pay much attention to it and do not damage it.

b.Use the li-based grease to lubricate the ball head pin if necessary.

c.Install the dust proof by the special tool, and be careful never let the dust proof over expansion.

Note:
Be careful and never let the grease on the tapered part of the bal head pin.

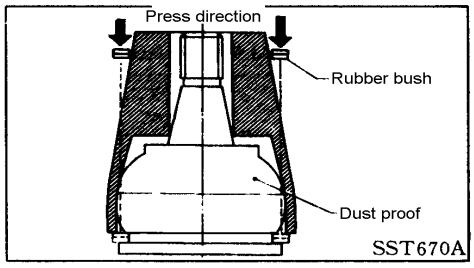

Drag link and tie-rod

Check the tie-rod and the related rods for any break, bend or crack, replace if necessary.

Fixing and adjusting part:

Check each connecting part (bolt and cotter pin) for any looseness, clearance or damage.

If there is looseness or extra clearance, check the ball head pin for damage.

When reassembling the ball head pin, use a new one.

https://truckmanualshub.com/

Power Steering System

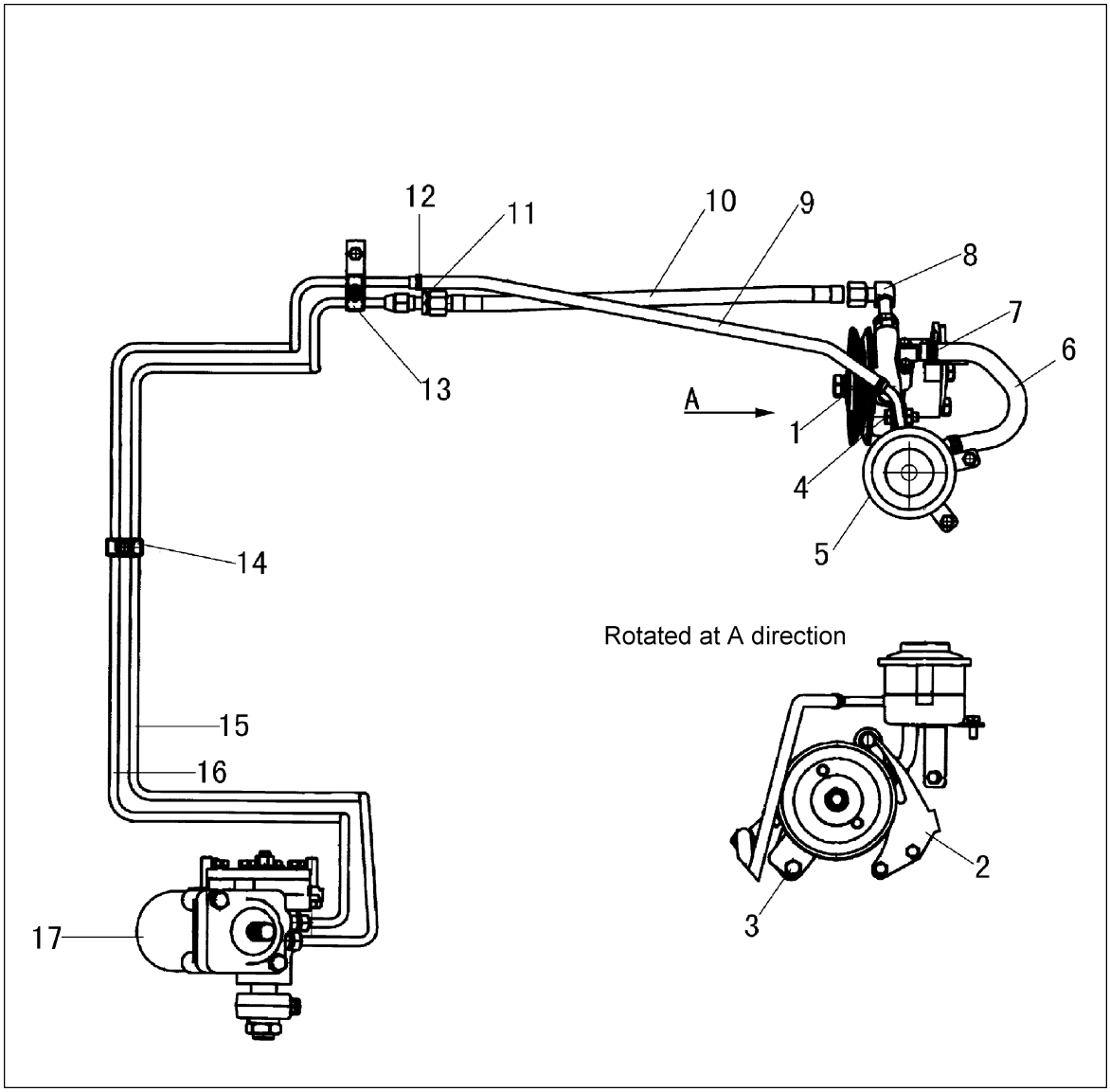

1.Steering oil pump assy
2.Steering oil pump bracket
3.Bolt
4.Bolt
5.Oil reservoir assy
6.Oil pump intake pipe assy
7.Clip
8.Adjustable elbow joint assy
9.Rubber hose
10.Steering gear oil intake hose assy
11.Straight joint
12.Throat hoop
13.Dual pipe clip upper bracket
14.Steel pipe clip backing ring
15.Steering gear oil intake pipe assy
16.Steering gear oil return pipe assy
17.Power steering gear assy

https://truckmanualshub.com/

Maintenance Data and Explanation

Basic parameter

Steering gear drive ratio: 23~26

Steering wheel turning circle: 4.3

Check and adjust

Steering wheel

Steering wheel axial clearance (mm): 0

Steering wheel free travel (mm): 10~40

Steering column:

Steering column length L (mm): 484

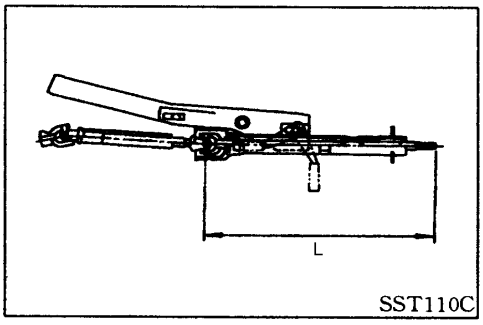

Connecting rod mechanism

Ball head pin assy

Transverse swing force (measuring point: cotter pin) N:

Drag link/tie-rod/intermediate pull rod: 5.9~64.7

Driving moment (N.m):

Drag link/tie-rod/intermediate pull rod: 0.3~3.4

Axial clearance (mm):

Drag link/tie-rod/intermediate pull rod: 0

Tie-rod standard length L (mm): 664.5

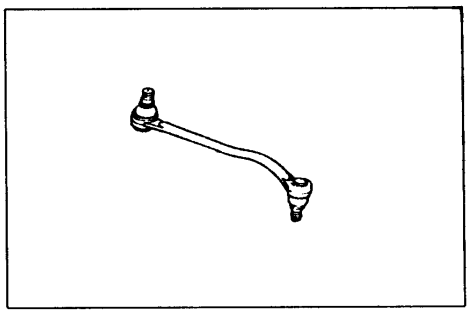

https://truckmanualshub.com/

https://truckmanualshub.com/

Brake System

BR

TOC

Attentions BR-1
Check and Adjust BR-2
Exhaust BR-3
Brake Pipe BR-4
Brake Pedal and Bracket BR-6
Brake Booster BR-8
Vacuum Pipe BR-11
Front Brake BR-12
Rear Brake BR-13
Parking Brake System BR-14

https://truckmanualshub.com/

Attentions

Use brake liquid of "901-4" to meet the requirements of DOT4.

May use other brand liquids which meet the requirements of DOT4, but two kinds of liquids are not allowed to mix up for use.

Do not reuse the exhausted and unclean liquid.

Be careful not to spray the liquid to the painted area, this will damage the painting surface. If the liquid sprayed out to the painted area without care, wash it immediately with water.

Clean the main pump, sub-pump and brake dump with clean liquid.

The mineral oils as gasoline and coal oil are not allowed to use, they will damage the rubber parts in the hydraulic system.

Disassemble the brake piping with tools.

Note:

Clean the friction lining with vacuum cleaner to minimize the air pollution caused by friction material and dust.

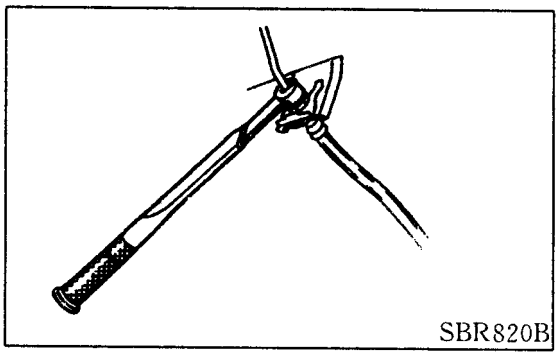

https://truckmanualshub.com/

Check and Adjust

Check the brake liquid level

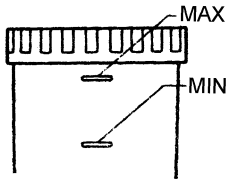

Check the level of the reservoir, it should be between "MAX" and "MIN".

If the level of the liquid is too low, check whether the brake system is leaking.

If the brake warning light is till on when releasing the hand brake rod, check whether the parking brake control system is adjusted to the right position.

Check the brake pipe

Note:：
If the leakage is from the joints, tighten or replace the damaged parts.

1.Check whether the brake piping is broken or aging or has other damages, replace the parts if necessary.

2.Depress the brake pedal to the end to check whether the oil is leaking when the engine is in running.

Brake liquid replacement

Fill up with "901-B" brake liquid.

1.Use a nylon pipe to connect each exhaust valve.

2.Exhaust the brake liquid by depressing the brake pedal.

3.Add new brake liquid until it flows out from each exhaust valve.

Exhaust out the oil from hydraulic system with the same steps and add new liquid. Exhausting steps are refereed to "Exhaust" part.

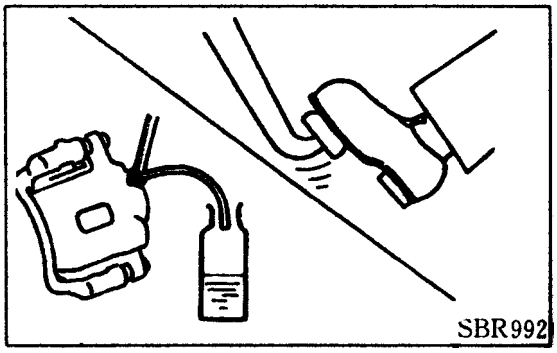

Note:
Do not reuse the exhausted and unclean liquid.
Be careful not spray the brake liquid on the painted area, it will destroy the painting film. If you do it carelessly, clean it at once with water.

https://truckmanualshub.com/

Exhaust

Note:

Monitor the level of the liquid in process of exhausting.

Add new liquid of "901-4" in to the reservoir to assure it is always full during the whole process.

Place a container under the main pump to avoid liquid coming out.

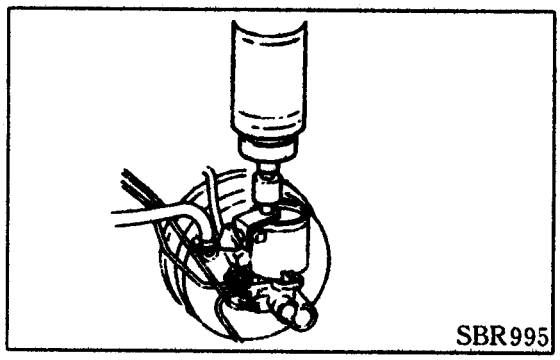

1.Use a nylon pipe to connect the exhaust valve.

2.Depress the pedal to the end several times.

3.Maintain the pedal at the end, loosen the valve to exhaust.

4.Tighten the exhaust valve.

5.Release off the pedal slowly.

6.Repeat the 2-5 steps until pure liquid flowing out of the exhaust pipe.

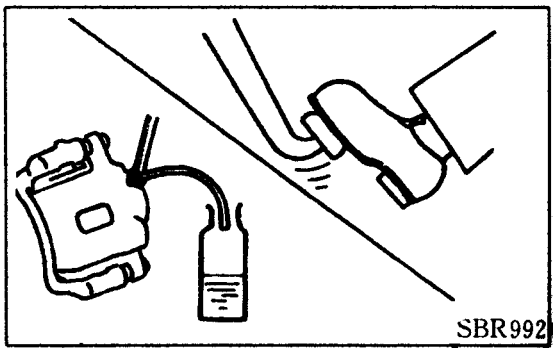

Exhaust following the steps below:

Left rear wheel → right rear wheel → left front wheel → right front wheel

Brake Pipe

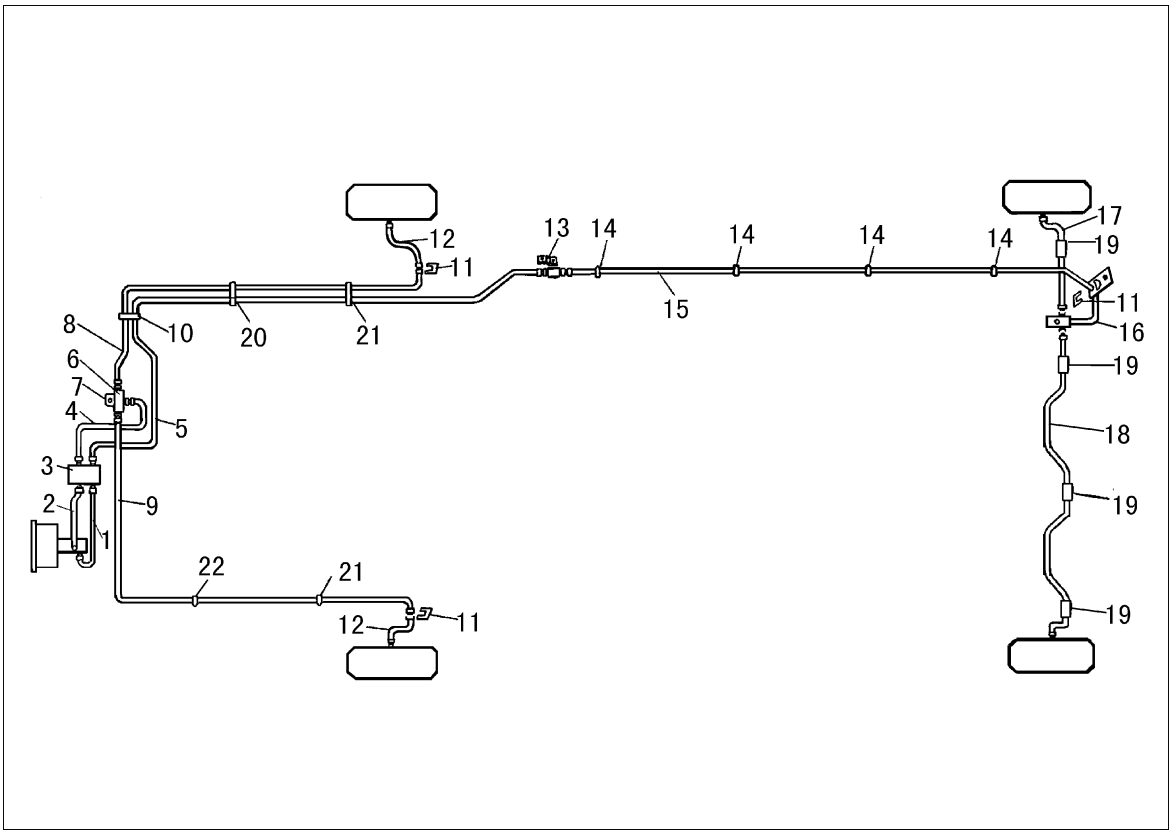

1.Oil brake pipe assy
2.Oil brake pipe assy
3.Three line straight joint
4.Oil brake pipe assy
5.1st oil brake pipe assy
6.Three way joint
7.Front three way bracket assy
8.Oil brake pipe assy
9.Oil brake pipe assy
10.Pipe clip for three pipe inline
11.Shim
12.Brake hose assy
13.Straight joint
14.Single pipe clip
15.2nd oil brake pipe assy
16.Brake hose assy
17.Oil brake hose assy
18.Oil brake hose assy
19.Nylon bush
20.Bracket
21.Upper bracket
22.Three pipes clip

https://truckmanualshub.com/

Disassembly

Note:

Be careful not spray the brake liquid on the painted area, otherwise it will damage the painting surface; if it dose, clean it immediately with clean water.

Avoid bending, twisting and stretching of all the hoses too much when disassembling.

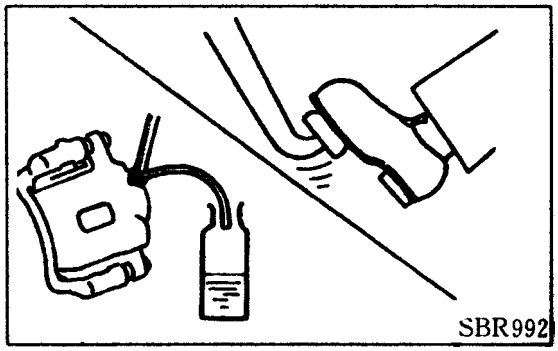

1.Use a nylon pipe to connect the exhaust valve.

2.Depress the pedal several times to exhaust all the liquid out of the valve.

3.Loosen the nut of the hose mouth connected with the brake.

4.Whenever cut off the hydraulic pipes, block the open with clean staff to avoid dust entering.

Check

Check whether there is any crack, wear of the brake piping (pipes and hoses), replace if there is.

Installation

Note:

Add new liquid of "901-4".

Do not use exhausted and unclean liquid.

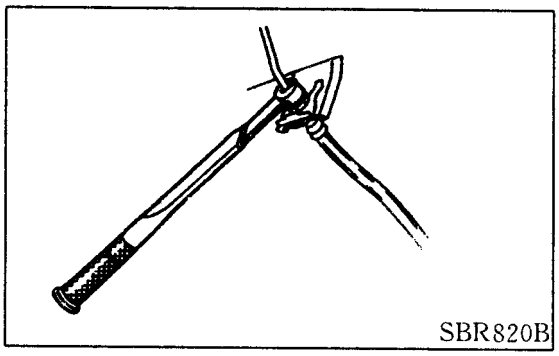

1.Tighten all the expansion nuts and bolts.

Tightening torque of the nuts: 15~18N.m

Tightening torque of the bolts: 17~20N.m

2.Add new liquid until it flows out from the valve.

3.Exhaust air based on the above steps.

https://truckmanualshub.com/

Brake Pedal and Pracket

Disassemble and assemble

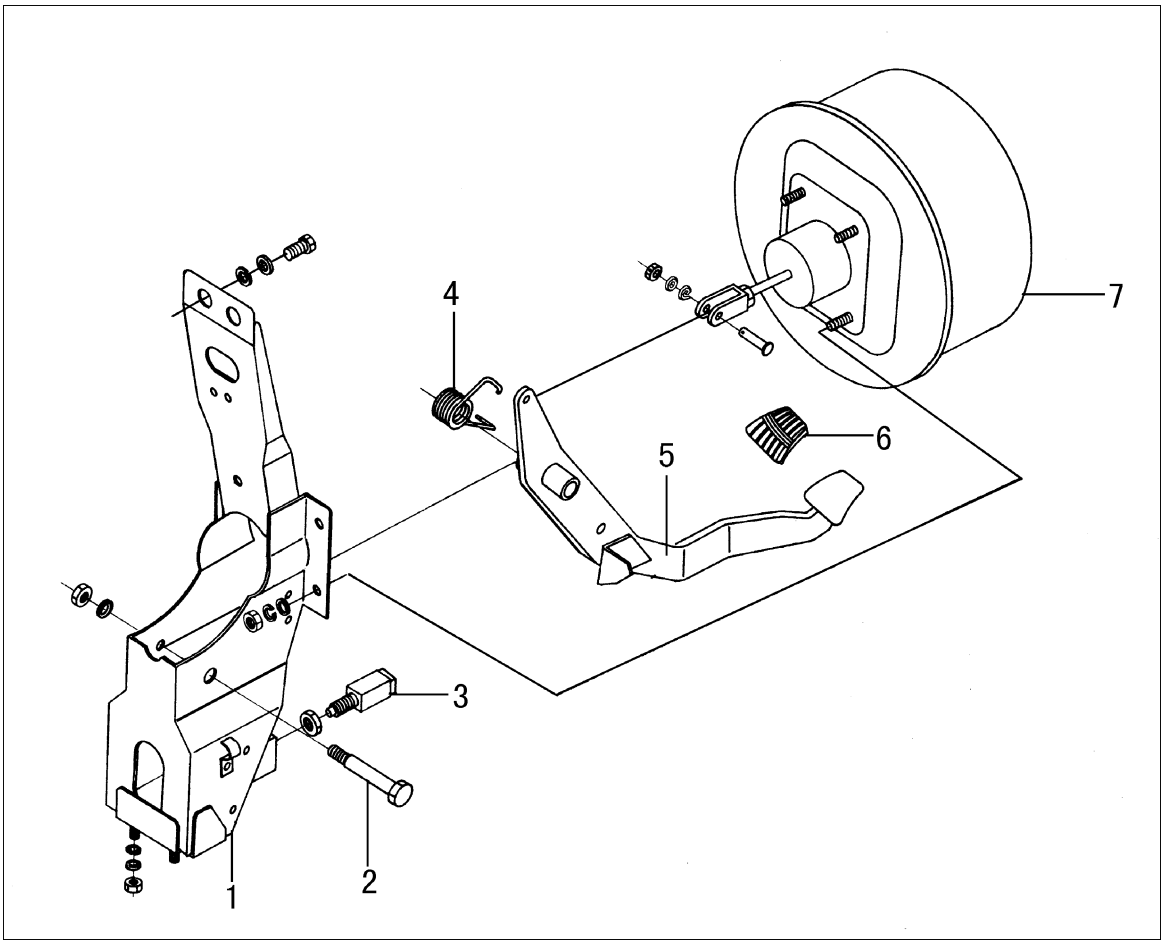

1.Pedal bracket assy

2.Support shaft

3.Brake lamp switch assy

4.Return spring

5.Brake pedal

6.Rubber mat

7.Vaccum booster with brake master pump

Assembly

Check the following items of the pedal:

Whether the pedal is bent.

Whether the pin is damaged.

Whether the welding area is cracked.

Whether the pin head is cracked.

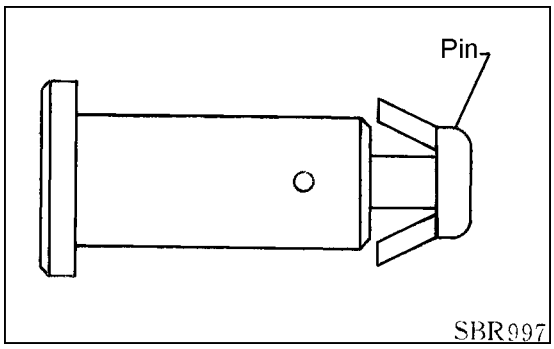

https://truckmanualshub.com/

Adjustment

Check the free height from pedal to reinforced plate.

Free height 169~175 mm

Note:

The booster rod couldn't be in a pressed position when assembling the booster head pin.

Adjust the pedal height if necessary.

Adjustment

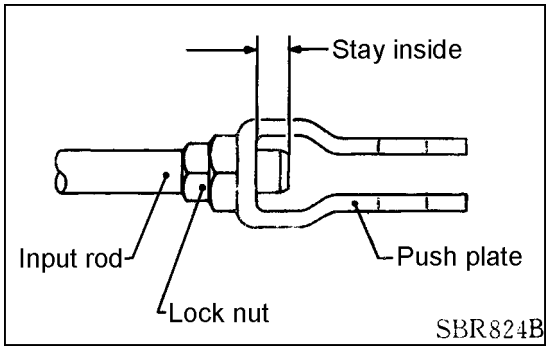

1.Loosen the lock nut, turn on the booster rod to adjust the pedal height, then tighten the nut.

Assure the pushing rod head end on the inner side of the pushing board.

2.Loosen the lock nut to adjust the light switch clearance, and then tighten the nut.

3.Check the pedal free travel.

Assure the brake light is off when releasing the pedal.

4.Check the height of the pedal when depressing it under the running of the engine.

If the height is lower than the specified value, check the system whether there is any leakage, or with air, or damage of the main pump, etc.), and then conduct necessary repairs.

https://truckmanualshub.com/

Brake Booster

Brake master pump with vacuum booster

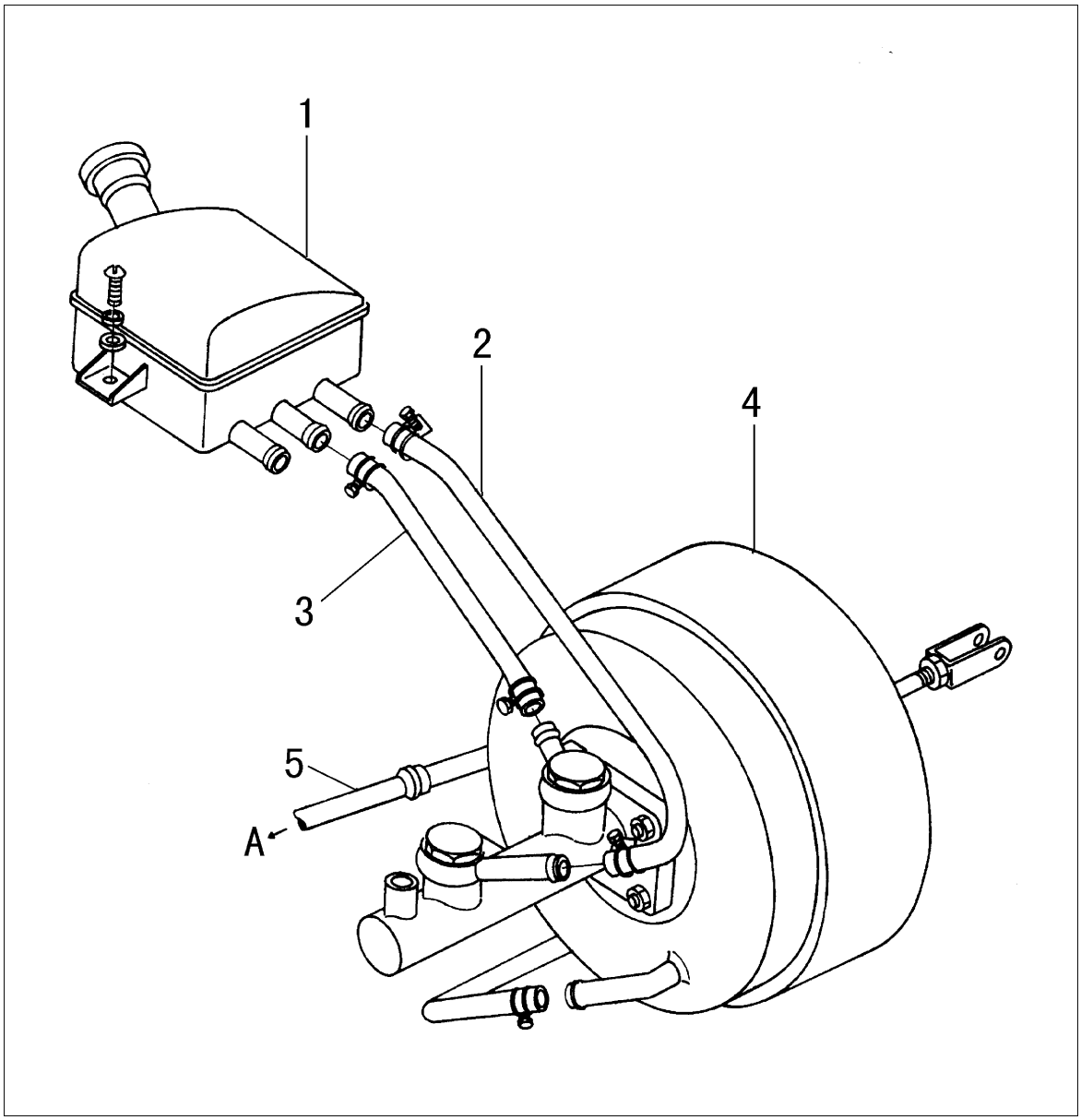

1.Oil reservoir assy

2.Front chamber oil pipe assy

3.Rear chamber oil pipe assy

4.Vacuum booster with brake master pump assy

5.Nylon pipe with one-way valve assy

Driving Inspection

Control check

Shut down the engine and depress the pedal for several times for any travel change.

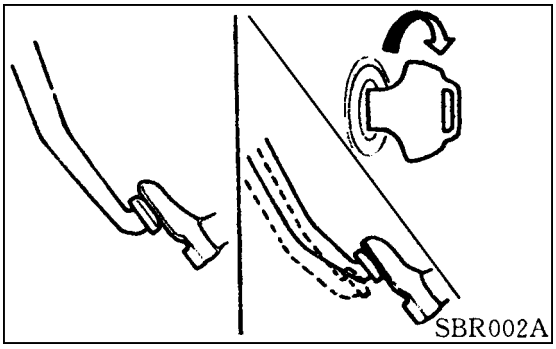

Press down the brake pedal, start the engine, if the pedal slowly down a litle, it is nornal.

Sealing check

Start the engine for one or two minutes then shut off. Press down the pedal for several times slowly, if the first time pedal down more and both the second and third time down less, the booster is normal.

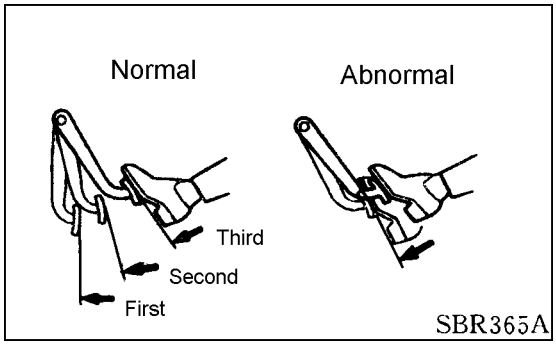

Depress the pedal when the engine is running, and then shut off the engine without releasing the pedal. If no distance change after the pedal depressing for 30 seconds, it proves that the booster is in good condition.

Booster disassembly

Note:：

Be careful not to let the liquid spray on the painted surface, it will destroy the painting film. If it does, clean it right away with clean water.

Be careful not to bend the brake pipe when disassemble the booster.

Check

Check the rod length of output end

Provide 66.7kPa vacuum for the booster with high strength of vacuum pump.

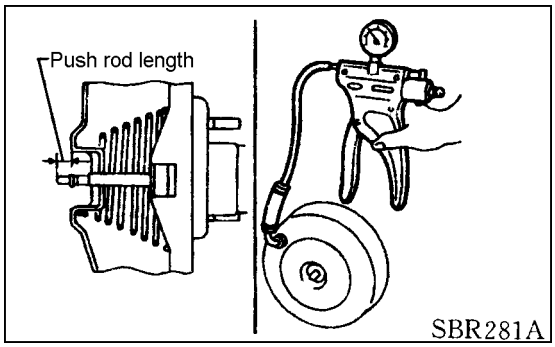

Check the push rod length

Specified length:

10.0-10.25mm

Clearance between the rod and the master pump piston:

0.1-0.5mm

Assembly

Note:

Be careful not bend the brake pipe when installing the booster.

If the U-type clip pin is damaged, replace it.

Add new liquid of "901-4" to meet the requirements of "GB12.981-HZY4".

May use other brand liquids which meet the requirements of GB12.981-HZY4, but two kinds of liquids are not allowed to mix up for usage.

Do not reuse unclean liquid.

Be careful not destroy the fixed bolt screws of the booster when installing if. Proper installation angle may avoid destroying the screws by metal around the instrument panel holes.

1.Adjust the push rod as shown in the right picture before installing the booster.

2.Tighten the fixed bolts between pedal bracket and booster when installing the booster.

3.Connect the pedal with the U-type rod of the booster input end.

4.Tighten the fixed nuts.

5.Assemble the master pump based on the above steps.

6.Exhaust based on the above steps.

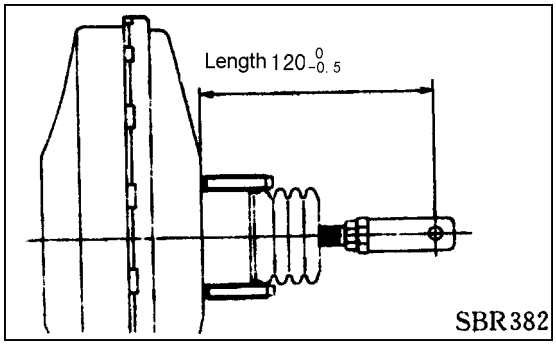

The distance from booster connecting yoke pin center to booster installing surface must be adjusted to $120^{0}_{-0.5}$mm, then lock the connecting yoke nuts.

Vacuum Pipe

Note;

Pay attention to the following points when installing the vacuum hose:

Do not put any oil on the vacuum hose and check valve.

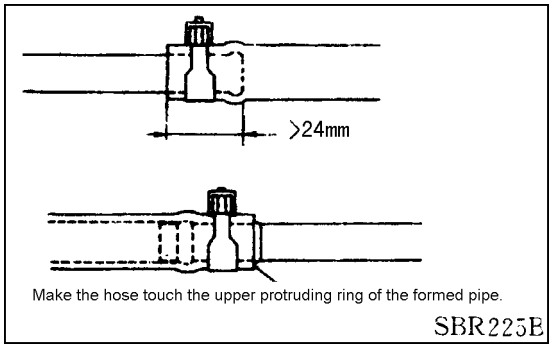

Insert the vacuum pipe to the vacuum hose and make the hose touch the upper protruding ring of the formed pipe.

Install the Nylon tube with single one-way valve assy., pay attention to the direction.

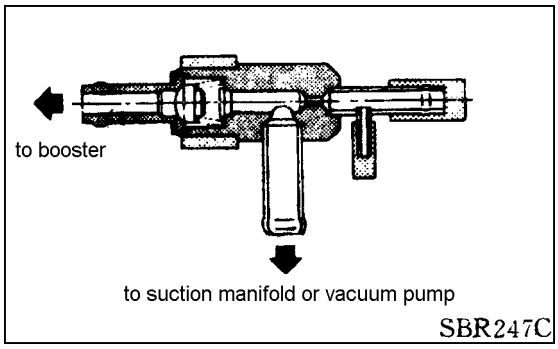

Check

Hose and joint

Check the vacuum pipe, joint and valve for sealing, and check the improper connection and damage.

Check valve

Use the vacuum pump to check the vacuum.

Connect the booster side: vacuum

Connect the engine side: no vacuum

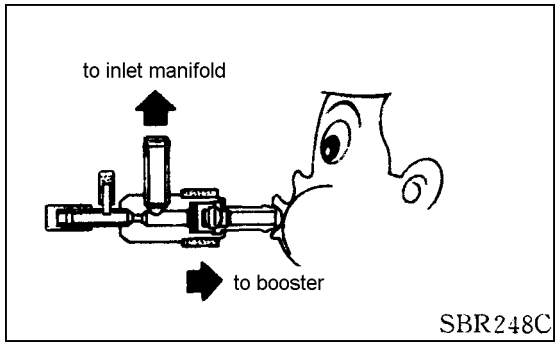

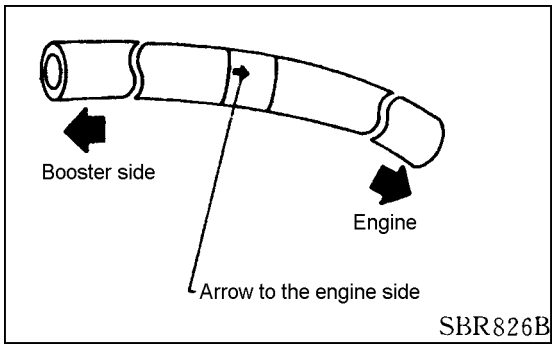

https://truckmanualshub.com/

Front Brake

Disassembly

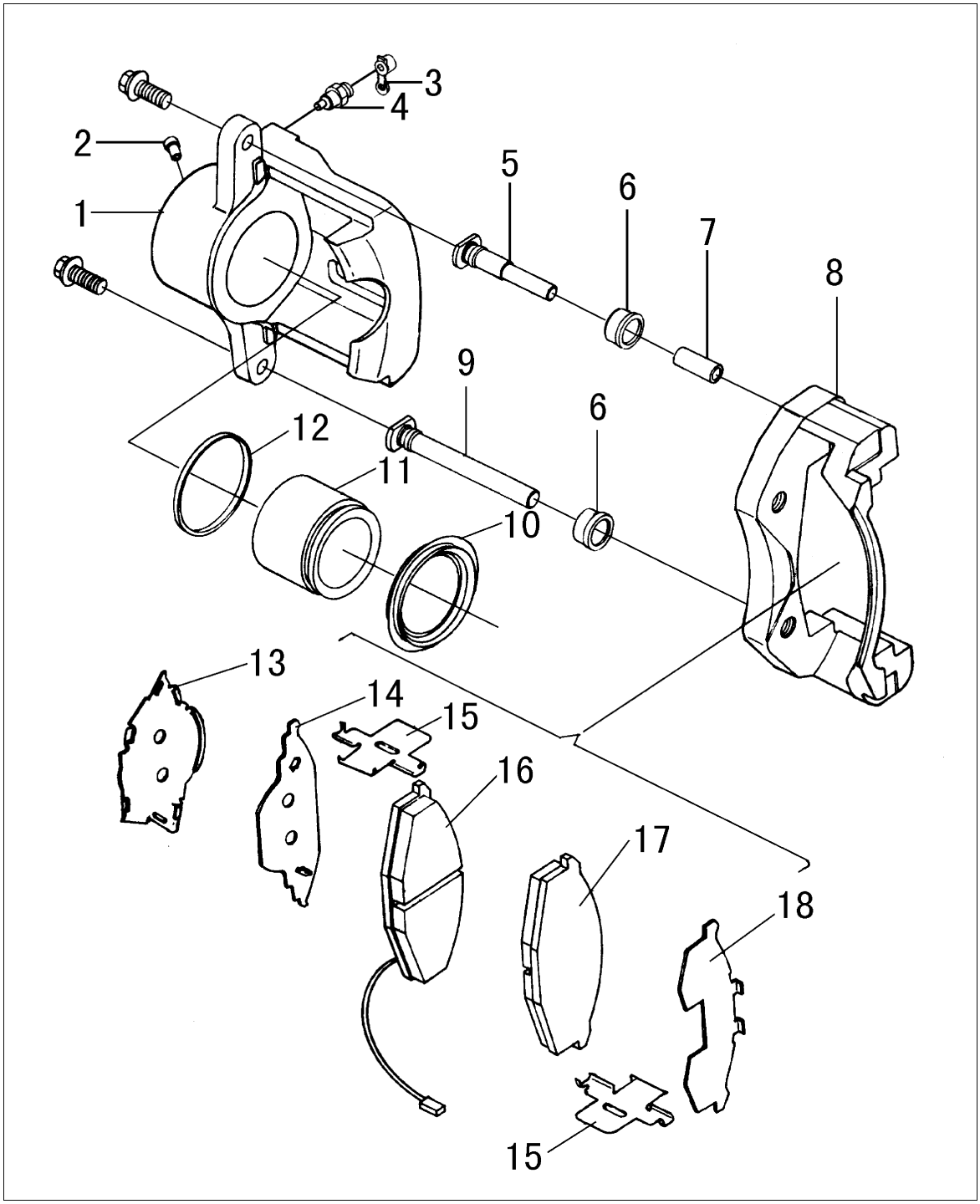

1.Caliper body
2.Hose joint core
3.Dustproof
4.Oil drain screw plug
5.Rest pin
6.Dustproof
7.Rubber bush
8.Caliper bracket
9.Guide pin
10.Dustproof
11.Piston
12.Sealing ring
13.Damping spacer
14.Insulation spacer
15.Spring leaf
16.Left brake friction block with alarm inductor assy
17.Friction block assy
18.Insulation spacer

https://truckmanualshub.com/

Rear Brake

Disassembly

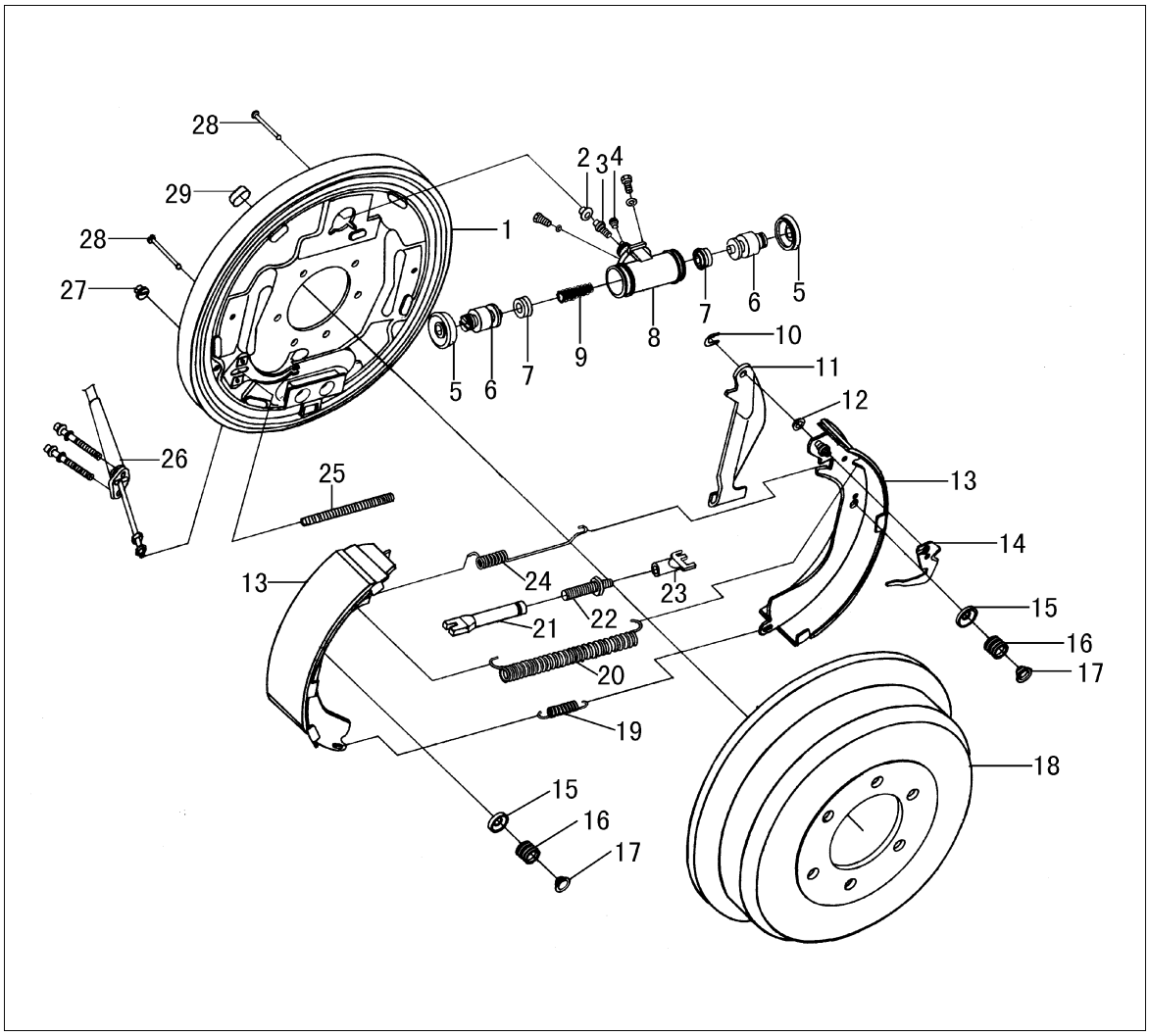

1.Rear left brake bottom plate assy
2.Dustproof
3.Oil drain screw
4.Joint core
5.Wheel cylinder shield
6.Piston
7.Rubber cup
8.Rear brake wheel cylinder body
9.Wheel cylinder spring
10.Shim
11.Left pull arm
12.Spring washer
13.Brake shoe plate assy
14.Fork
15.Spring seat
16.Brake shoe pressure spring
17.Spring seat
18.Rear brake drum
19.Return spring
20.Return spring
21.Fork
22.Ratchet wheel
23.Fork
24.Return spring
25.Return spring
26.Parking brake cable assy
27.Dustproof plug
28.Pull rod
29.Dustproof plug

https://truckmanualshub.com/

Parking Brake System

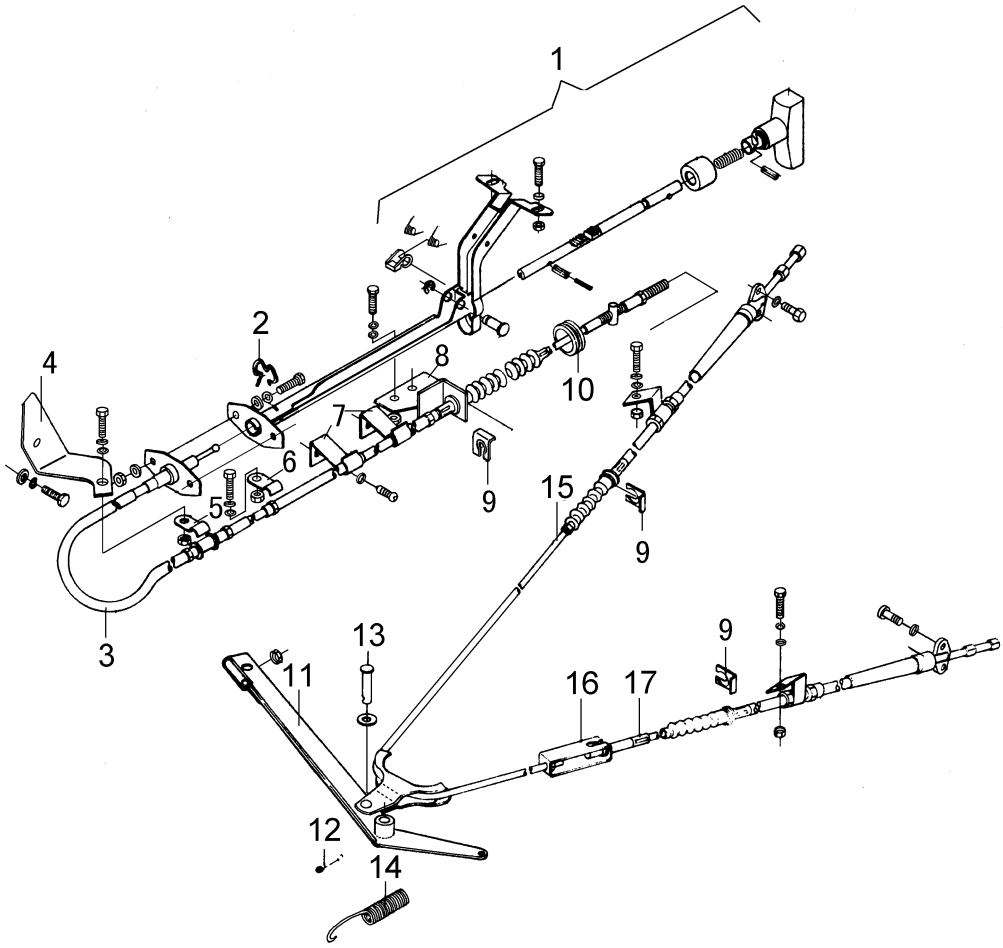

1.Parking brake control lever assy
2.Elastic clip
3.Parking brake wire rope assy
4.Bracket with welding nut assy
5.Monotube clamping piece
6.Monotube clamping piece
7.Flexible shaft shim
8.Bracket assy
9.Spring shim
10.Rubber bush
11.Rocker assy
12.Cotter pin
13.Pin shaft
14.Return spring
15.Parking brake wire rope assy
16.Connecting rack and welding nut assy
17.Parking brake wire rope assy

https://truckmanualshub.com/

Cab & Frame

BF

TOC

Cab
Clip and Fastener BF-1
Cab Front Panel BF-2
Door BF-3
Instrument Panel BF-4
Cab Interior Trims and Exterior Trims BF-5
Seat BF-12
Cab Safety Belt BF-13
Rear Mirror Outside Cab BF-14
Cab and Cargo Body BF-15

Chassis Frame
Chassis Frame BF-15

Heater
Using of Heater BF-18
Air Heater Parts Structure BF-19
Special Service Tool BF-20

https://truckmanualshub.com/

Cab

Precautions

•When removing or installing various parts, place a cloth or padding onto the vehicle body to prevent scratches.
•Disassemble or assemble the handle device, molding parts, instrument, inner trims and so on carefully, not to soil or damage them.
•Apply seal glue on necessary place when assembling.
•Be careful not let the glue flow out of the parts when applying.
•When replacing the metal parts extarnal plate of the body, be sure to take rust prevention measures.

Clip and Fastener

•The following codel and pictures and symbols are subiect ot the clip and fastener in the BF section.
•The clip and fastener must be replaced if damaged during assembling or disassembling.

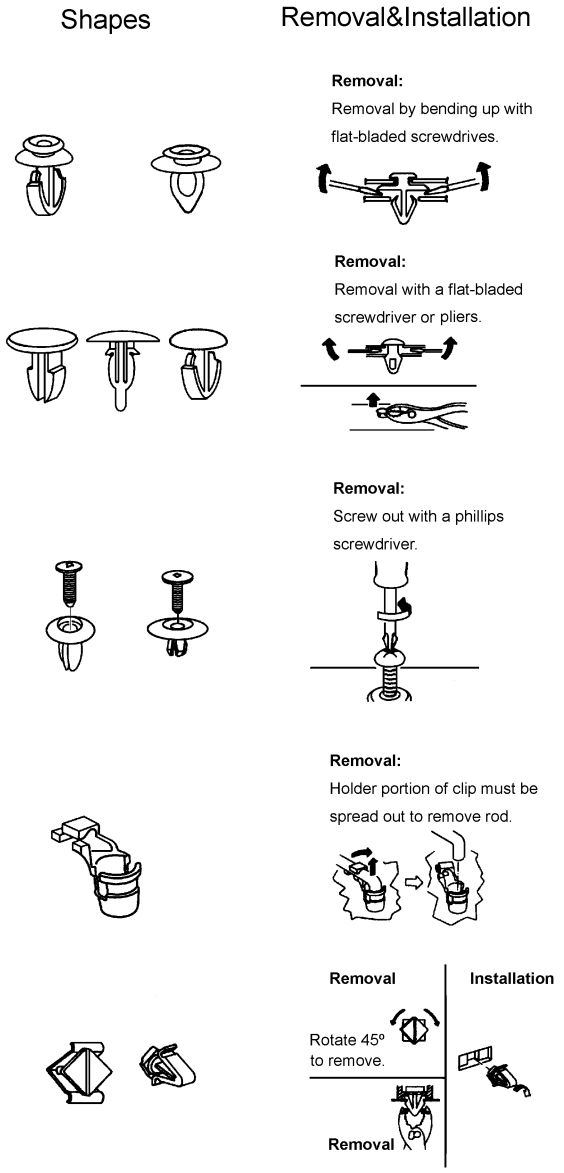

https://truckmanualshub.com/

Cab Front Panel

Disassembly of the front bumper assy:

1.Remove the fixed bolt of front bumper.

2.Disassemble the connection device for right and left fog light.

3.Remove the bumper assy.

4.Disassemble the clip and bolt..

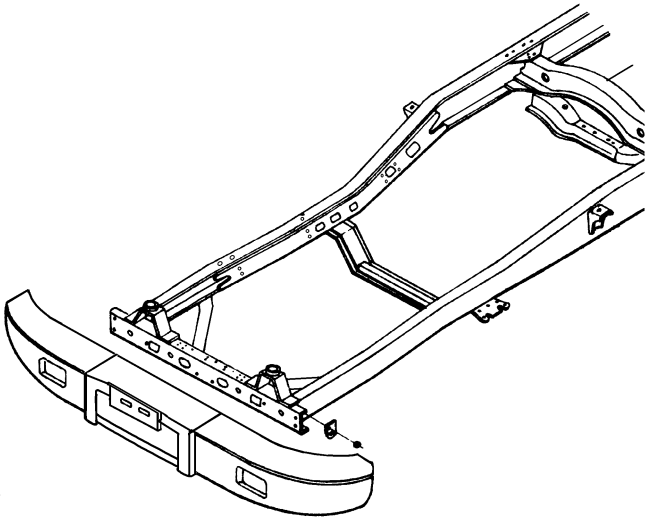

Door

Front Door

Note:
•When disassembling the front door, it is better to disassemble the cover at front side first.
•After adjusting the door or door lock, check the door lock open and lock condit ion.

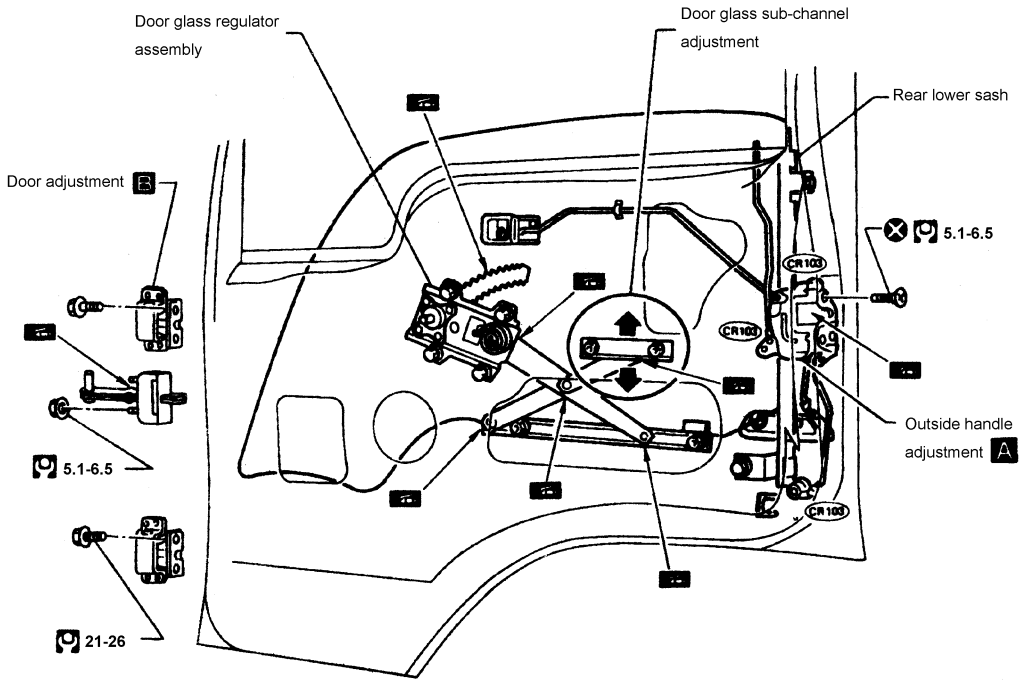

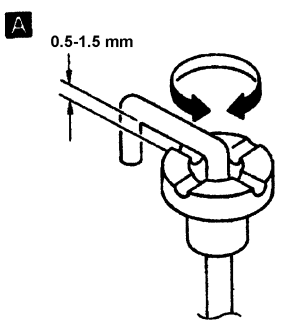

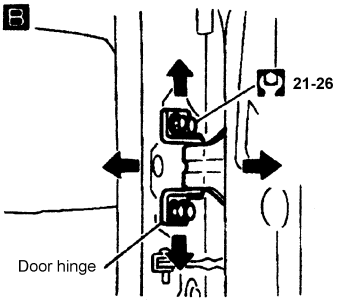

Striker adjustment

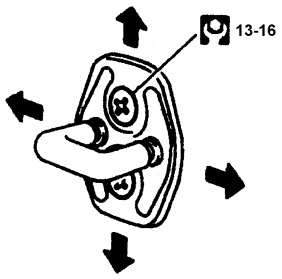

:N.m

Instrument Panel

Note:

•Before disassembling the instrument panel, switch off the power-supply.
•e careful not to scratch pad and other parts.
•These parts are made of plactic. Excessive force will damage them.

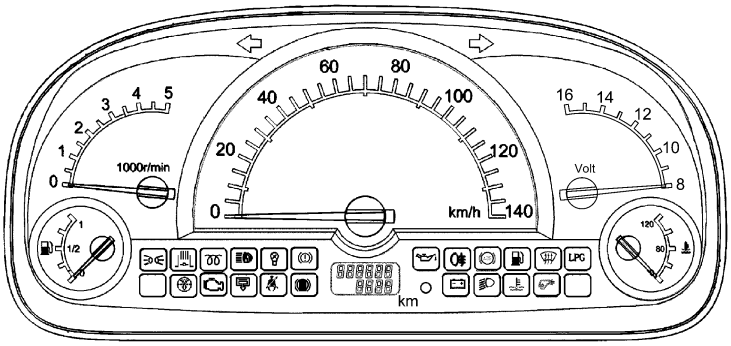

Cab arrangement

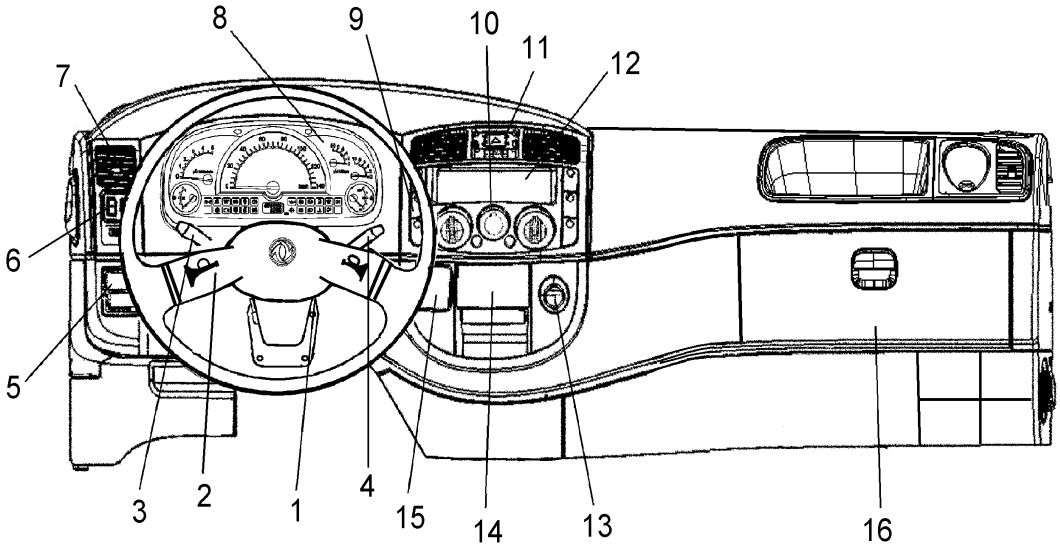

1.Ignition lock
2.Horn button
3.Combined light switch
4.Windshield wiper & washer rod
5.Compartment light switch
6.Windshield switch
7.Vent
8.Instrument panel
9.Fog light switch
10.Heater switch
11.Hazard warning light switch
12.Radio cassette
13.Cigarette lighter
14.Ashtray
15.Storage box
16.16.Glove box

Cab Interior Trims and Exterior Trims

Interiorl trims

Side ard floor trims--Passenger area

Note:

•Wrap the tip of flat-bladed screwdriver with a cloth when removing metal clips from garnishes.

Disassembly of the side inner trims:

① Disassemble the sun visor.

② Disassemble the rearview mirror.

③ Disassemble the roof lamp ass'y.

④ Disassemble the handrail.

⑤ Disassemble the seats.

⑥ Disassemble the safely belt.

⑦ Disassemble the door guardrail.

⑧ Disassemble the rear window glass.

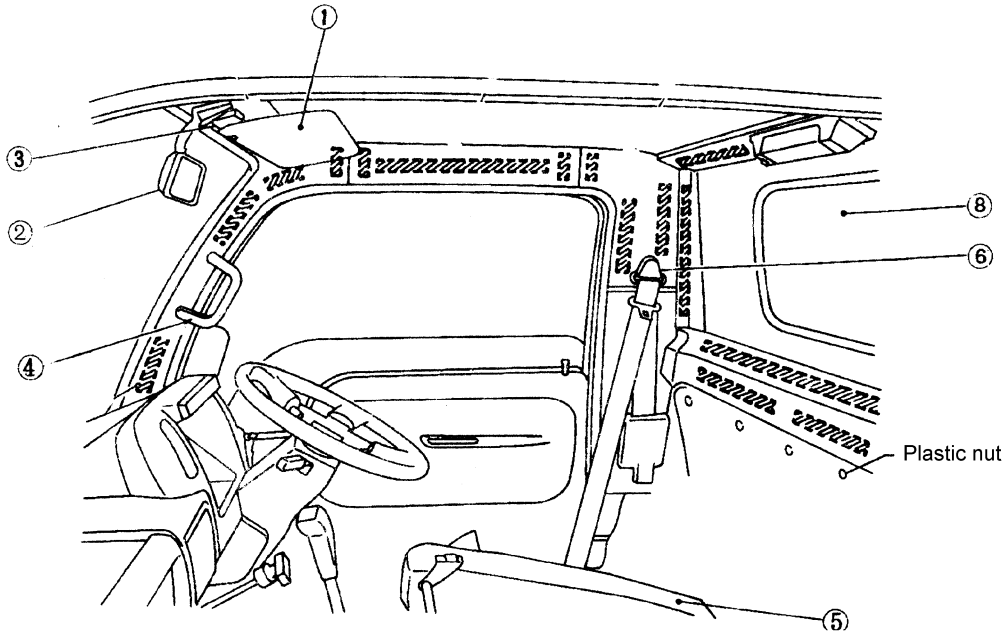

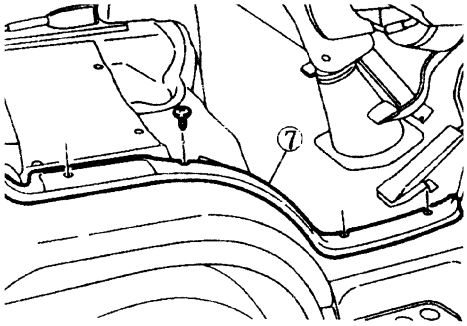

Door trims

Disassembly of the door trims:

① Disassemble lock knob.

② Disassemble inside seal.

③ Disassemble inside handle escutcheon rear door).

④ Disassemble pull handle.

⑤ Pull out regulator handle.

⑥ Disassemble inner guard board of door (front door).

door

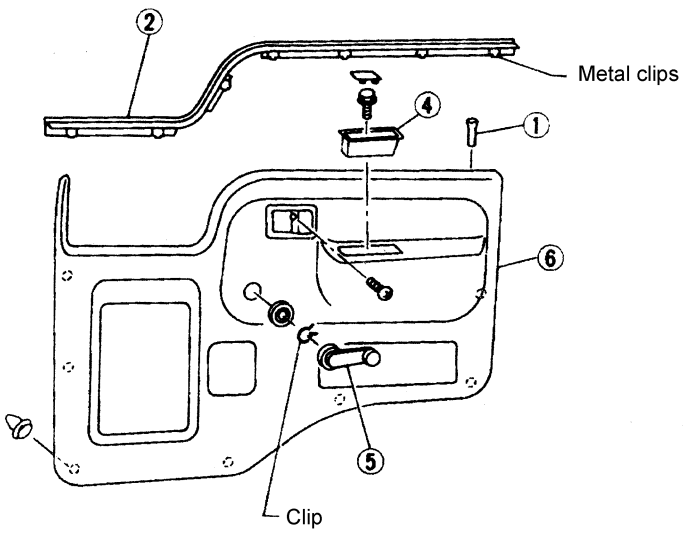

Roof trims

Disassembly of the roof trims

① Remove part of headlining from corner and gradually peel headlining off.

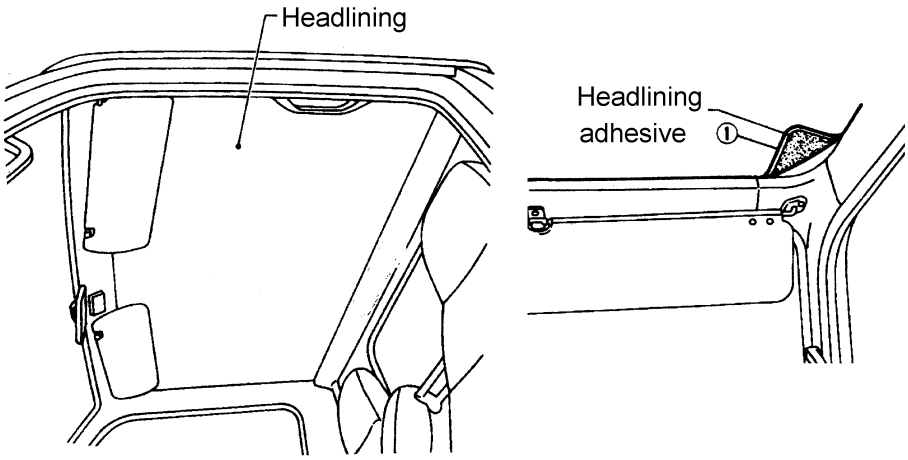

Cab Exterior Trims

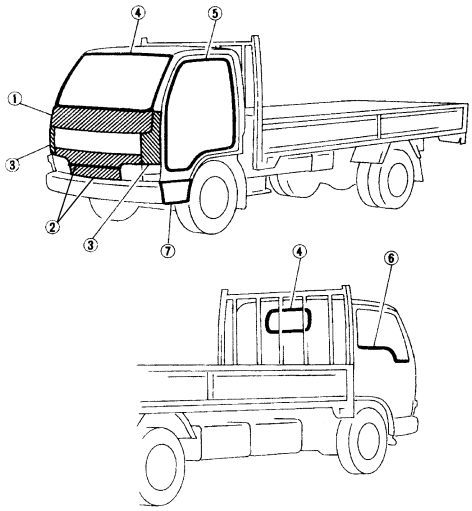

① Front upper cover

② Front lower cover and lower cover board

③ Side external cover board

④ Front and rear windows

⑤ Cab door seal strips

⑥ Door and window seal strips

⑦ Front pedal cover and pedal mat

Cab Front Panel Grill

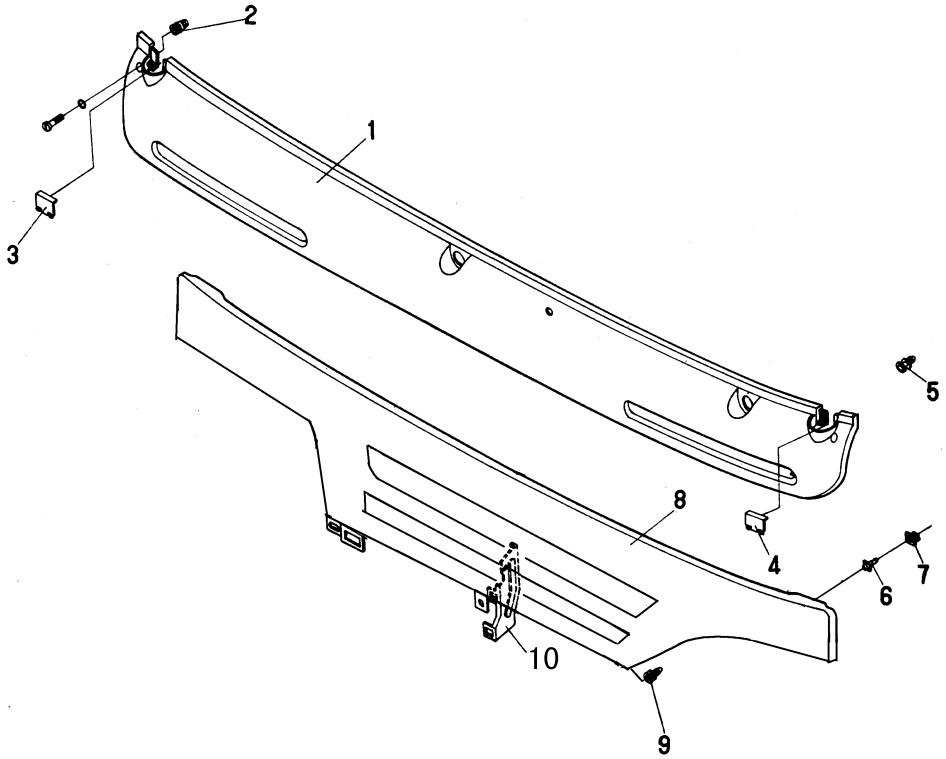

Front and rear window pane

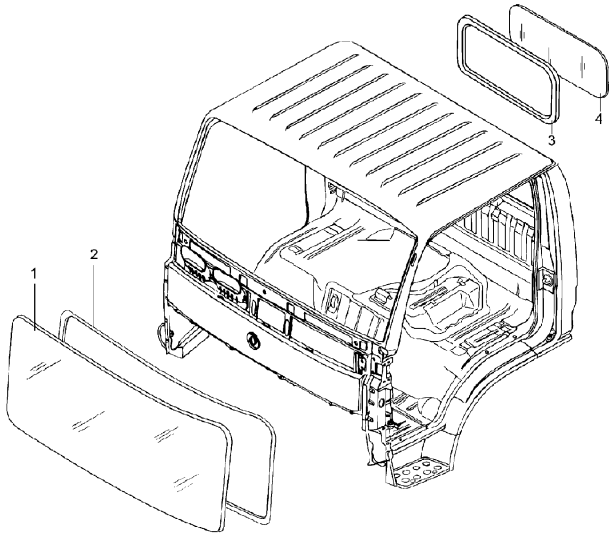

Cab door seal strip

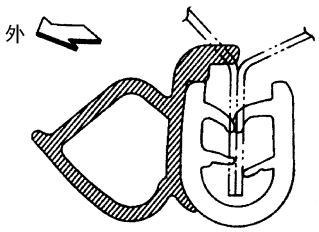

https://truckmanualshub.com/

Door outside molding

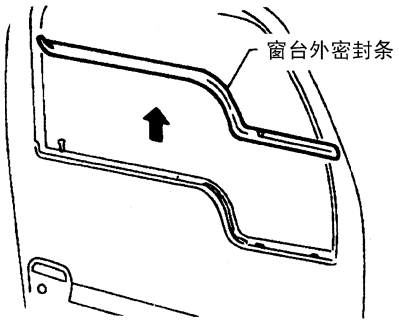

局部剖视

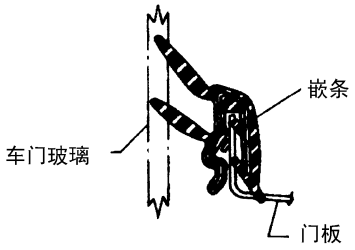

https://truckmanualshub.com/

Pedal shield and pedal pad

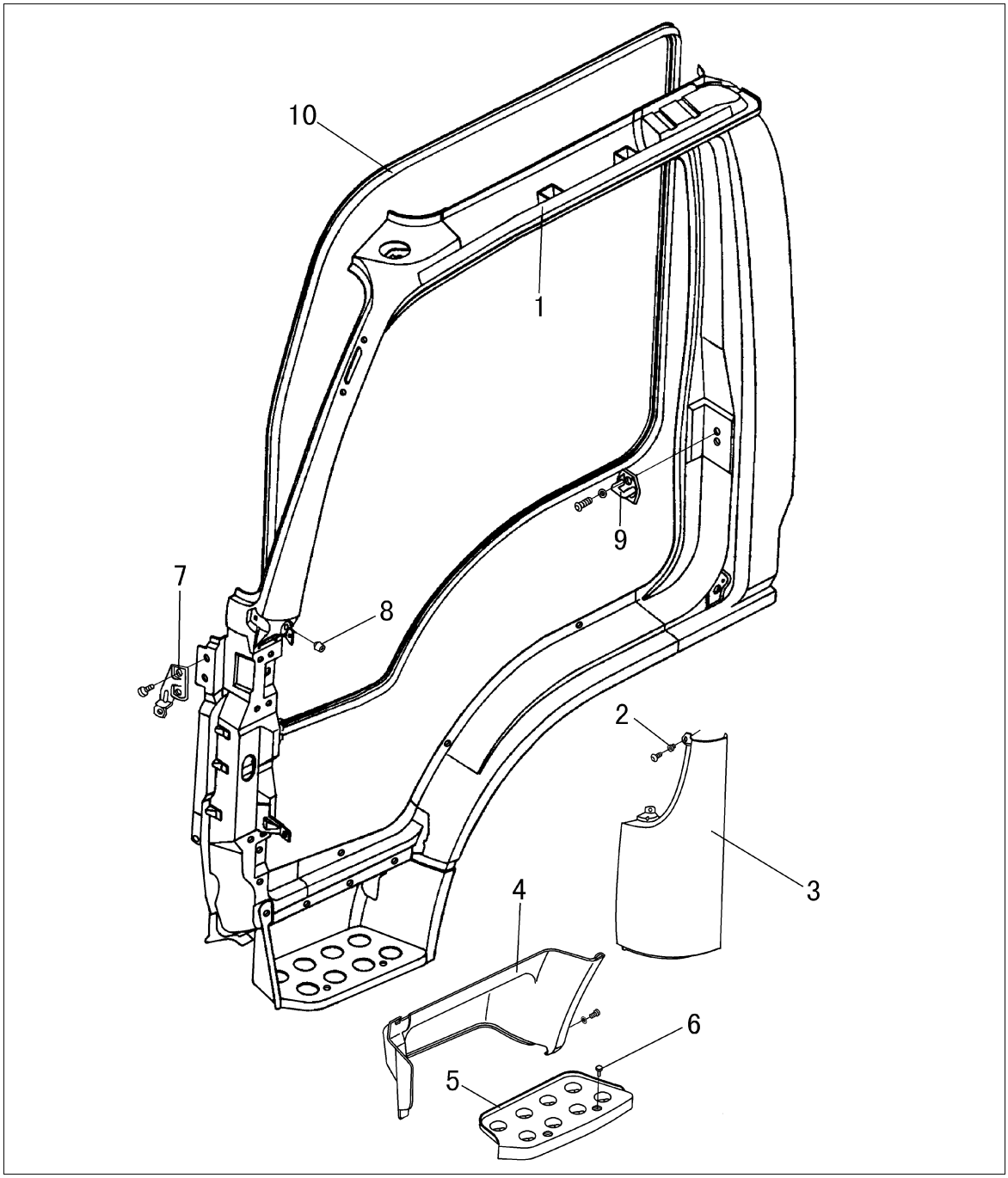

1.Welded left side panel assembly
2.Plastic nut assembly
3.Outer cover assembly
4.Pedal shield
5.Pedal pad
6.Clip assembly
7.Front bracket
8.Buffering rubber nail
9.Door lock dowel pin assembly
10.Door sealing strip assembly

https://truckmanualshub.com/

Seat

Note:
•When assemble or disassemble the seat, it should be maintarined clean and well.

Front seat

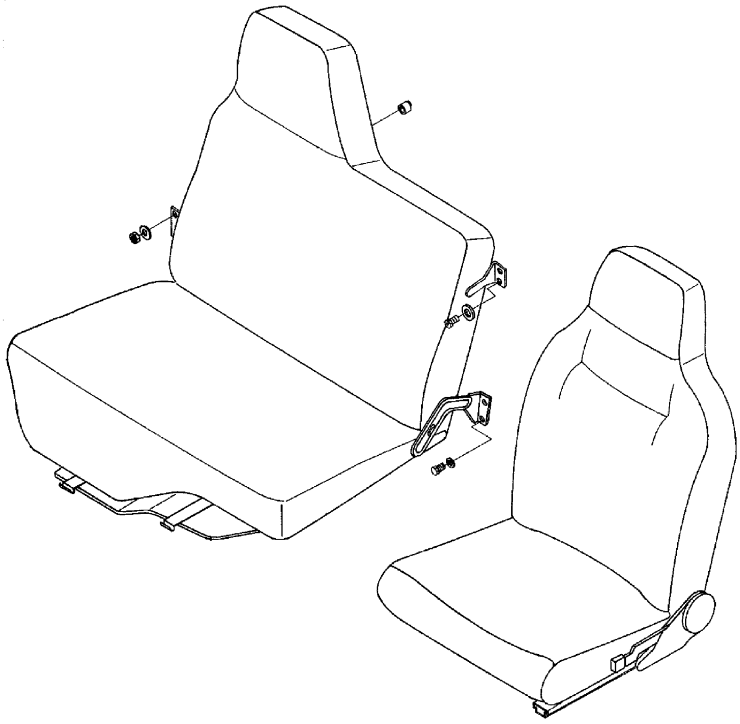

Cab Safety Belt

Notes:
•If the vehicle in severely dashed in an accident, whatever the nature of the accident is, the belt assembly must be replaced.
•If any part of the belt has quality problems, it must be replaced instead of repairing it.
•If there is any cut, looseness or damage on the texture, etc., replace the assembly.
•Wine, oil or other material should not be sprayed into the buckle hole lock, so does not the huckle and the knob.

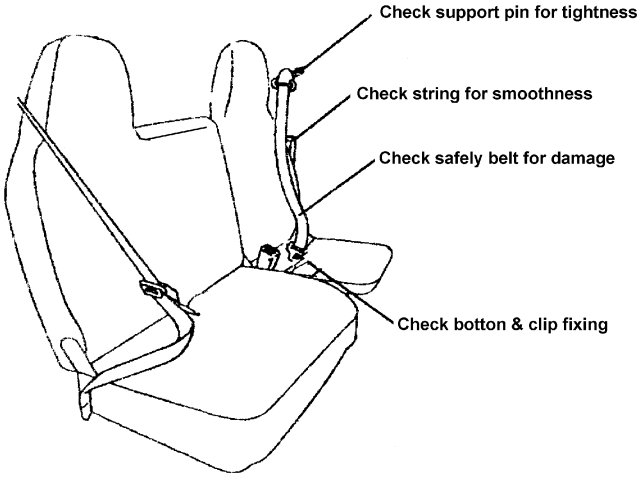

Rear Mirror Outside Cab

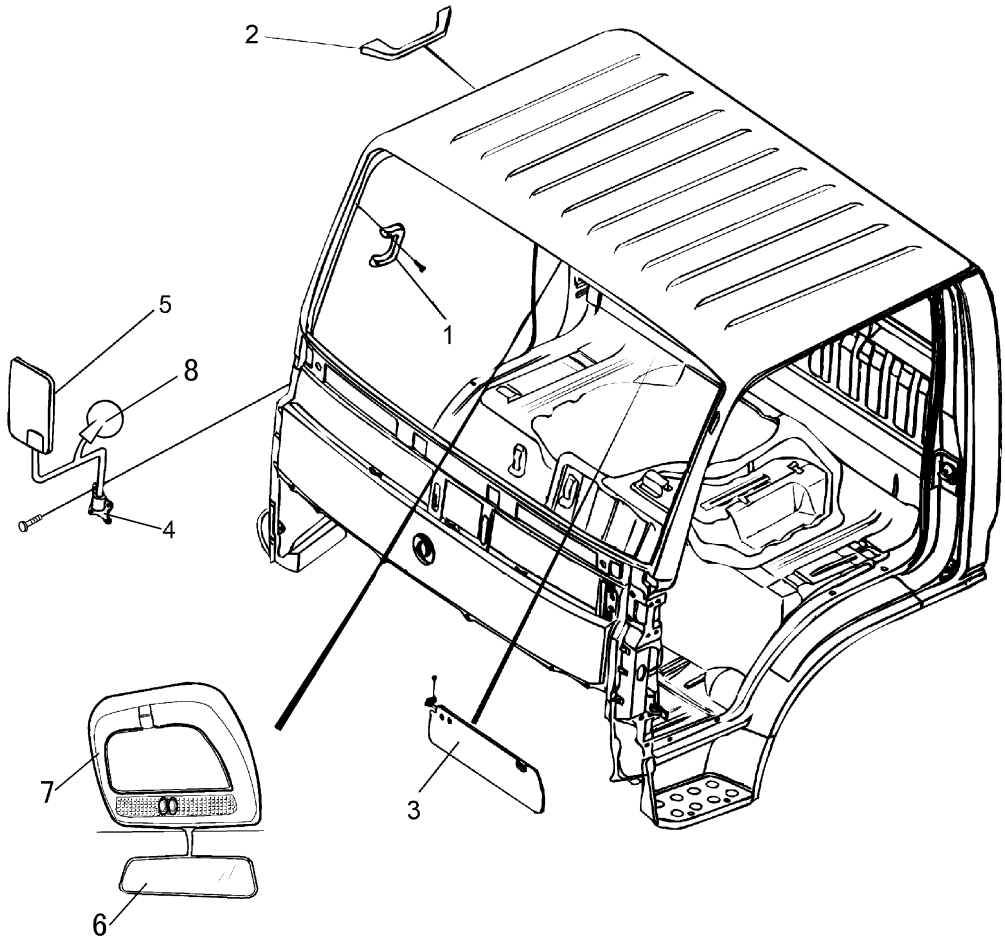

1.Handrail
2.Handrail
3.Sun visor assembly
4.Outside rear view mirror bar assembly
5.Rear view mirror assembly
6.Inside rear view mirror
7.Dome glove box with roo lamp assembly
8.Down view mirror assembly

Cab and Cargo Body

Cab

•The following parts at least should be disassembled in the area of cab engine:

1)Main electric system and wire harness.

•Sparate the engine part from steering transminsion device, brake system and clutch operation system.

•The following parts at least should be disassembled in the area of cab:

1)Transmission system and steering control system.

2)Hand brake operation and brake drag wire.

3)Electric system, wire harness and tube.

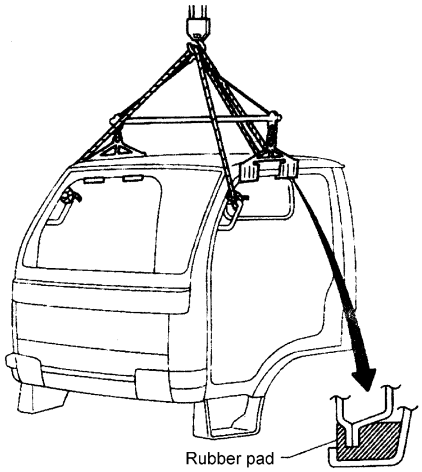

Cargo body

•First disassemble the following part:

1)Rear combination light system and license lamp.

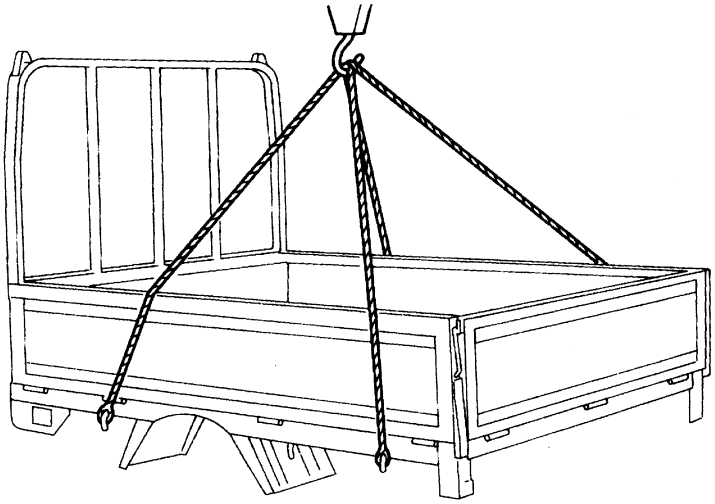

https://truckmanualshub.com/

Cargo Body Installation

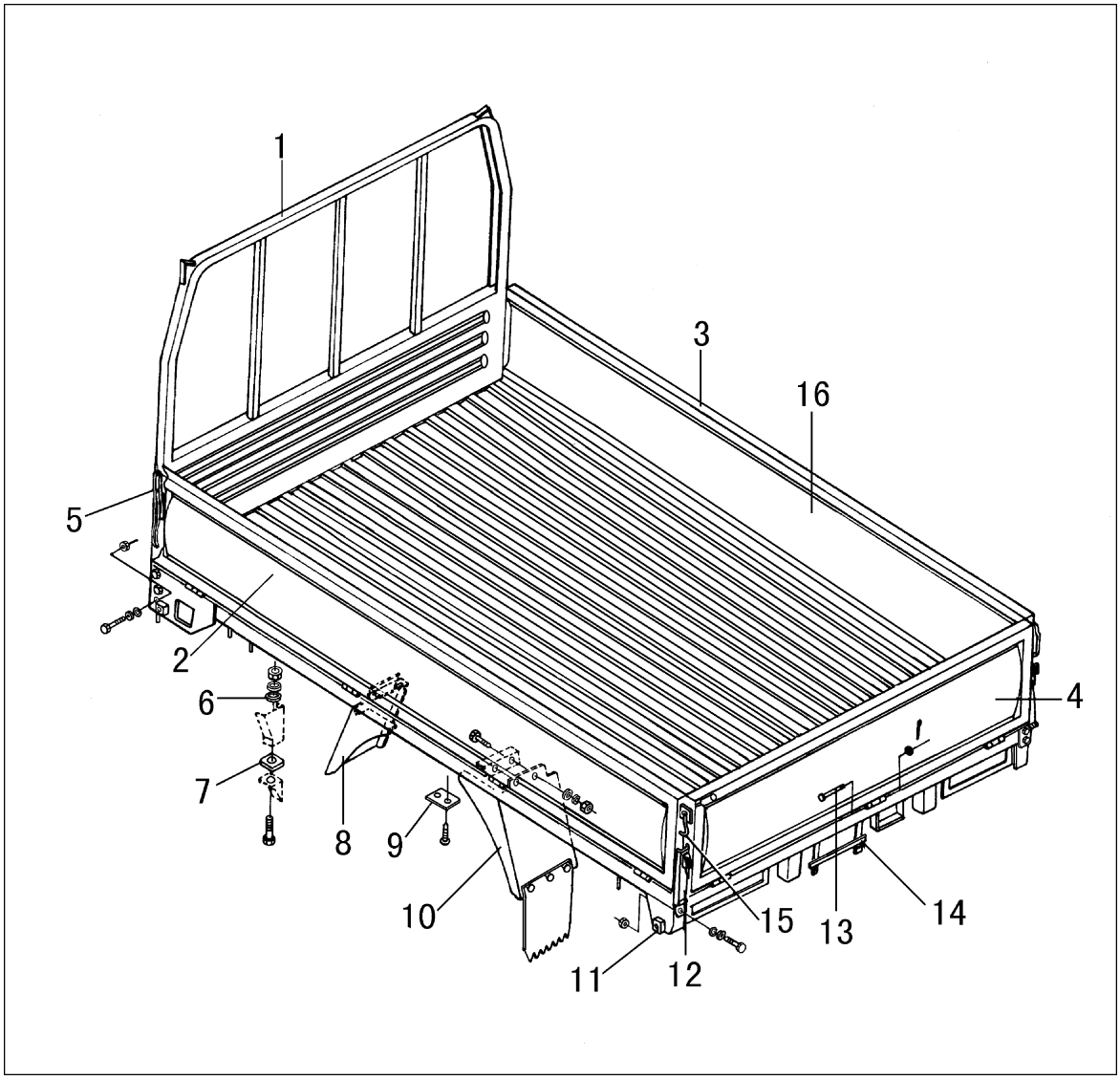

1.Front board assy
2.Left side board assy
3.Right side board assy
4.Rear board assy
5.Locking bar assy
6.Rubber gasket
7.Rubber base plate
8.Left rear mudguard
9.Main sill supporting base plate
10.Left rear mudguard assy
11.Buffer stopper
12.Left locking device assy
13.Aixs pin
14.License fixing plate assy
15.Left rear locking bar
16.Cargo body bottom plate assy

Notes: Different model has different shape of cargo body.

https://truckmanualshub.com/

Chassis Frame

Chassis Frame

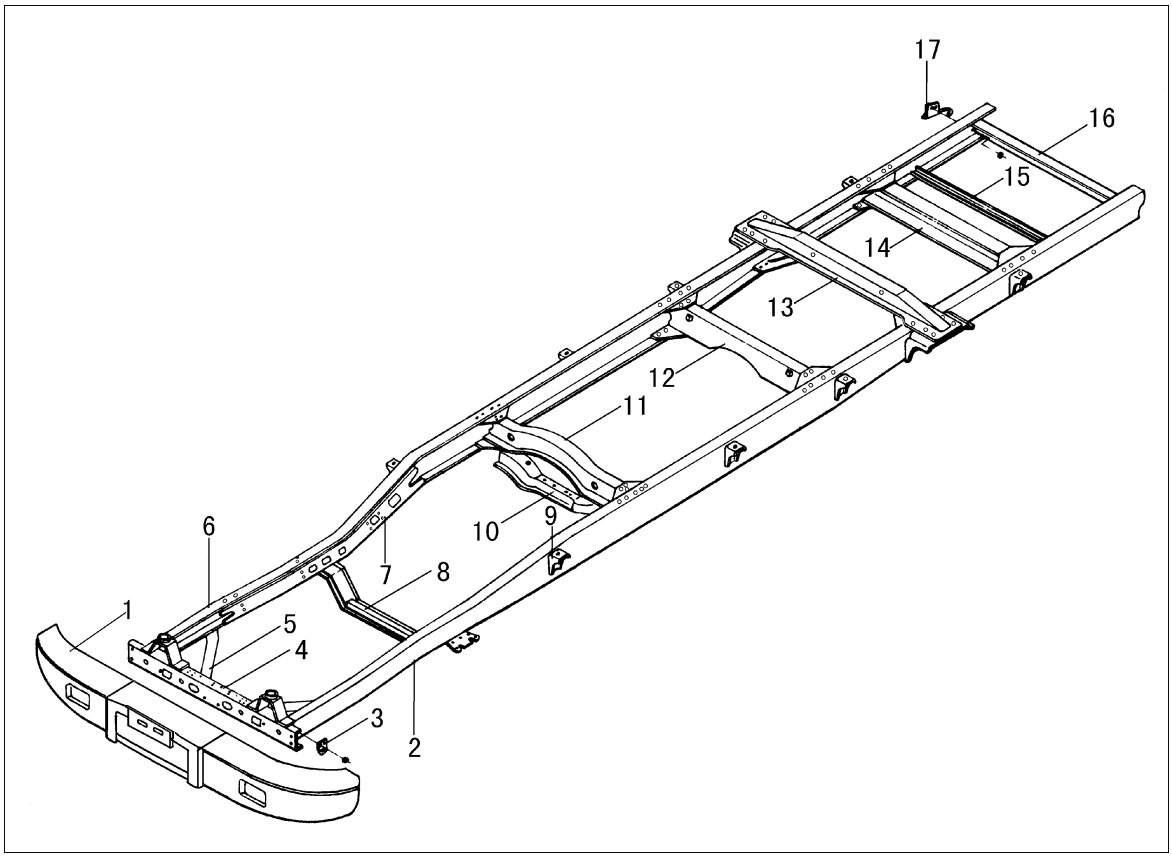

1.Front bumper
2.Left side member
3.Front tow hook
4.1st cross member assy
5.Left gusset assy
6.Right side member
7.Right side member gusset plate assy
8.Front mounting cross member assy
9.Body angle iron
10.Engine rear mounting cross member assy
11.3rd cross member assy
12.Cross member
13.Shock absorber cross member assy
14.Cross member
15.Cross member
16.6th cross member
17.Rear tow hook assy

Heater

Using of Heater

Control panel

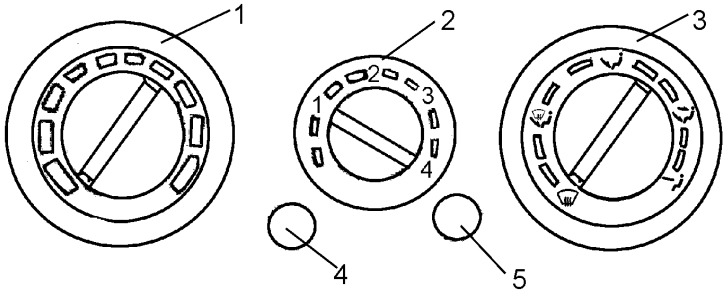

1.Change-over switch (no use)
2.Fan switch
3.Operating-mode chosen switch
4.Plug
5.Inside air circulation switch

Fan switch

There are five speeds provided, from 0 to 4. At 0 position, the fan stops, and the wind will become even stronger from 1 to 4 speed successively.

Turn these switch to adjust to the satisfied mode if the heater is needed.

Operating-mode chosen switch

—blowing to your head

—blowing to your feet

—blowing both to your head and feet

—inside heating and defogging

—inside defogging

Turn the switch to select the needed wind mode.

1.Cab inside air circulating switch

—circulating internal air

Press this button to circulate the cab inside air and average the air thermal distribution.

Note:
•The warm air is heated by the cooling liquid of the engine. Its temperature depends on the temperature of the cooling liquid. Please do not use the heating device too long when the engine is stop or idle, otherwise it will wear out the battery and influence the normal driving.

Air Heater Parts Structure

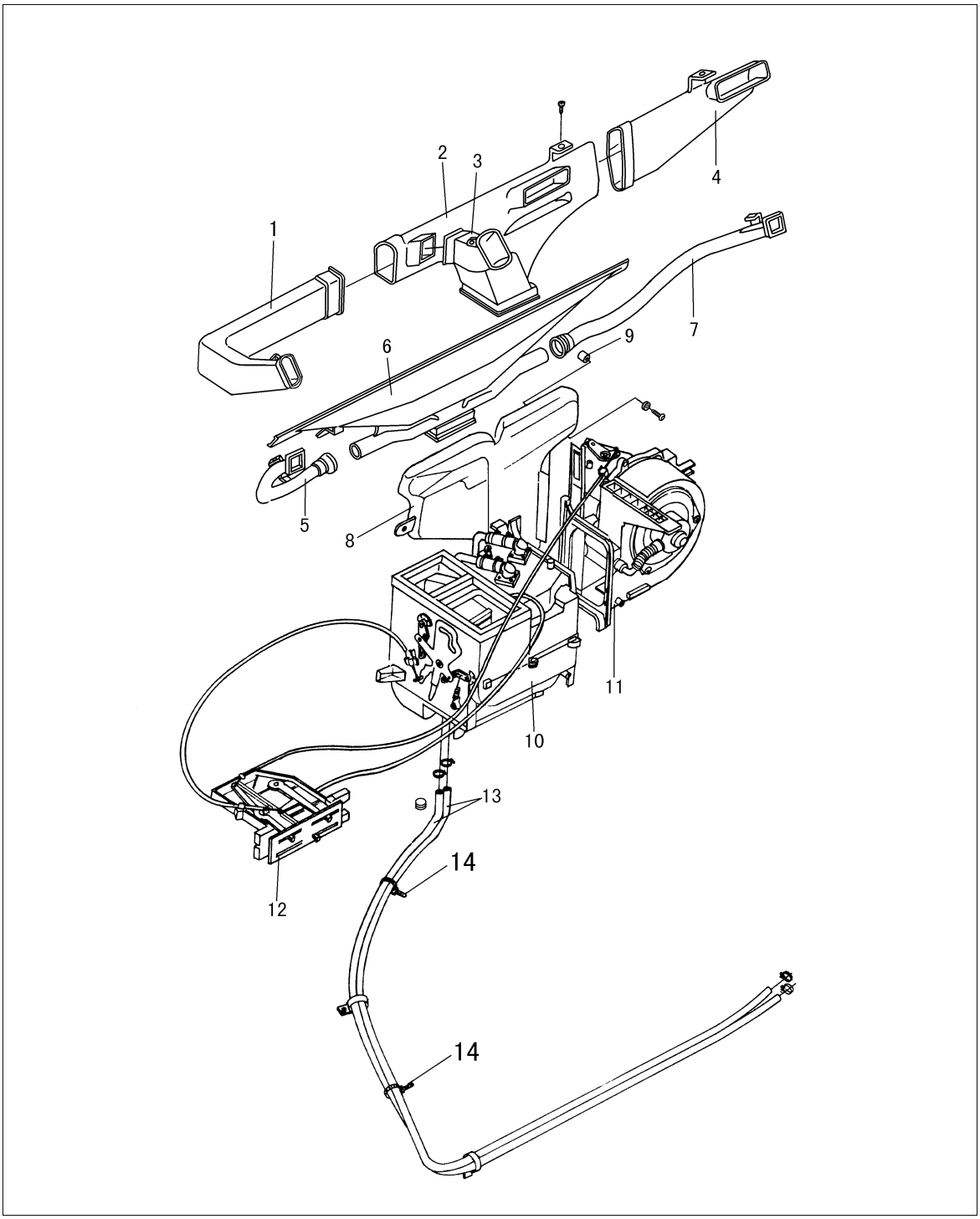

1.Left air pipe
2.Air duct assembly
3.Middle air pipe
4.Right air pipe assembly
5.Defrosting pipe assembly, left door
6.Defrosting nozzle assembly
7.Defrosting pipe assembly, right door
8.Air inlet duct assembly
9.Plastic nut assembly
10.Heater assembly
11.Blower assembly
12.Heater control mechanismassembly
13.Water inlet & outlet pipe
14.Nylon strap

https://truckmanualshub.com/

Special Service Tool

Name		Explanation
Clutch special wrench	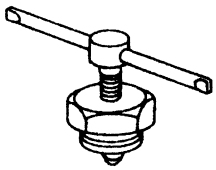	Disassemble the clutch drive disc
Shaft seal detacher and installing device	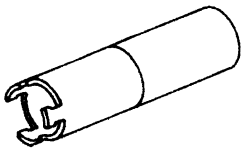	Disassemble and assemble the shaft seal
Filling device	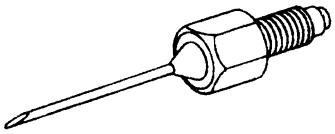	Fill coolant
Clutch disc tightening wrench		Disassemble the shaft seal nut and the clutch drive disc
Pull device	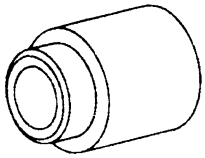	Disassemble the belt pulley wheel
Belt pulley wheel installing device	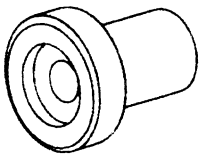	Assemble the belt pulley wheel
Shaft seal guider	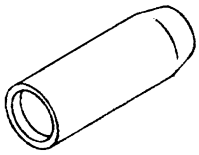	Assemble shaft seal
Socket wrench	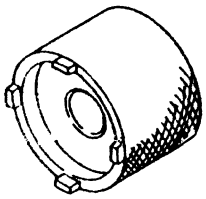	Disassemble locking nut

As for the operating method please see the tool service manual for detail.

https://truckmanualshub.com/

Electric System

EL

TOC

Harness Connector EL-1
Standard Relay EL-1
Fuse Wire and Fusible Link EL-2
Battery EL-2
Charging System EL-4
Starting System EL-5
Combined Switches EL-6
Front Head Lights EL-6
Combined Instrument Panel EL-7
Windshield Washer and Wiper EL-8
Radio Cassette and Antenna EL-10

Electric System

Harness Connector

All the terminals have been improved, which could prevent from loosening and disconnection.

Terminals could be loosened by pressing and pulling lock parts.

Note:
Don't pull electric wire while disconnecting terminals.
Example:

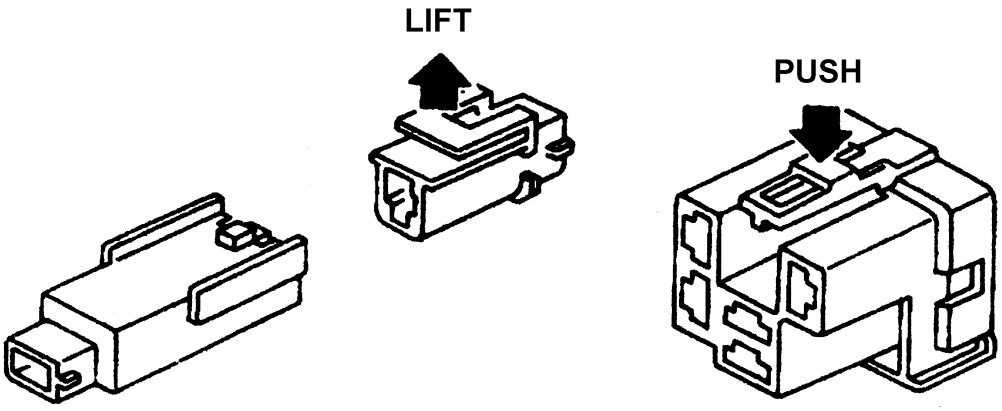

Standard Relay

Relay can be divided into three types:open, close and mixed.

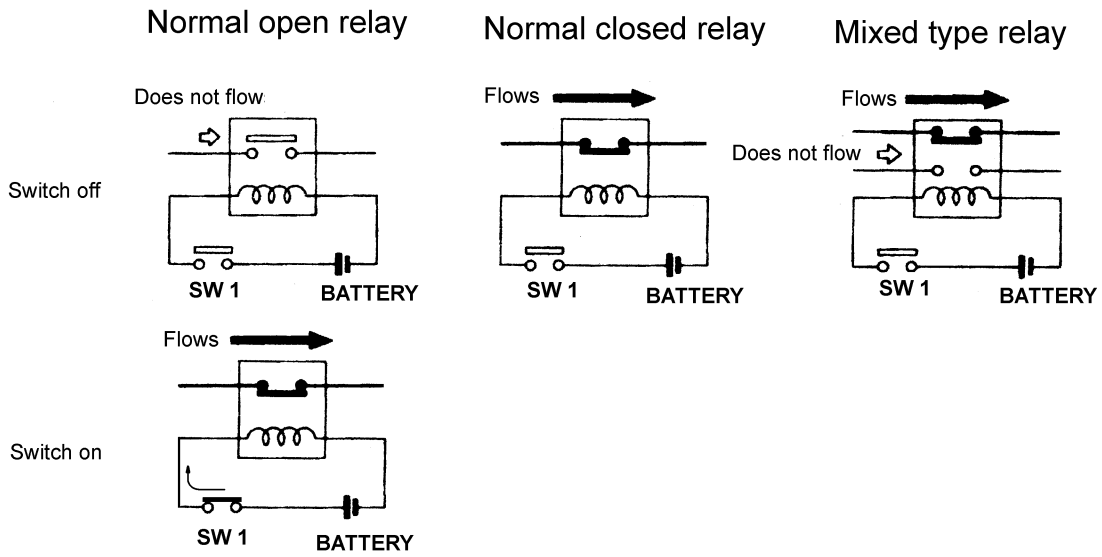

https://truckmanualshub.com/

Fuse Wire and Fusible Link

Fuse wire

If the fuse wire is broken,the problem must be solved before replacing the fuse wire.

Use proper fuse,do not use the fuse with much higher than rated value.

Insert the fuse box correctly,do not slope it.

Take off the fuse wire of the clock,if the vehicle is not used for long time.

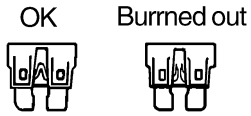

Fusible link

The melted fusible link can be seen with eyes,if not sure,check it with a electric measuring device and a check lamp.

Note:

If the fusible link is melted,maybe the key circuit breaks down(power line or big electric flow circuit).Under such condition,carefully check and solve the problems.

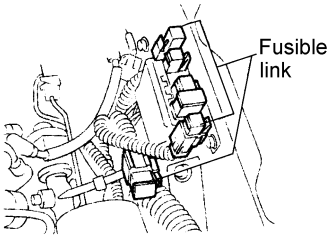

Battery

Caution:

Start the engine with supporting battery and the cable if necessary .please use 12 V auxiliary battery.

After connecting the battery cable, make sure their connection with the joints is well.

How to maintain the battery

Method of preventing over-discharge

The following precautions must be taken to prevent the battery over-discharge.

1.The battery surface(partticularly its top)should always be kept clean and dry.

If there is electrolyte or water on the top, it will cause the battery to discharge.

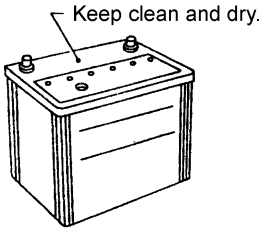

2.If the vehicle no used for quite long time, release off the negative pole joint.

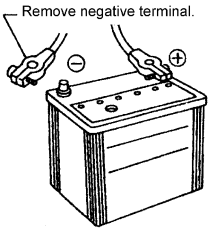

3.Check the condition of battery charge

Check the proportion of electrolyte periodically, carefully watch the charge state to prevent over-charging.

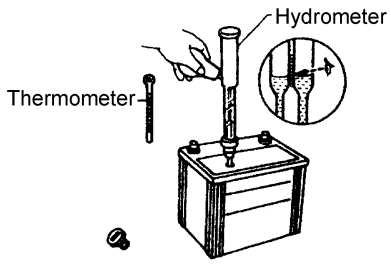

Liquid level check

Warning:

Do not let the electrolyte touch with your skin,eyes,and painted surface.After touching the battery,you must clean your hands thoroughly.If acid liquid goes into your eyes, skin,and cloth,wash them right away with clean water for 15 minutes and seek some medical attention. Normally the battery does not need to add water, but under bad condition, steamed water needs to be added.

1.Release off the battery plug with proper tools.

2.Add in steamed water until "max".

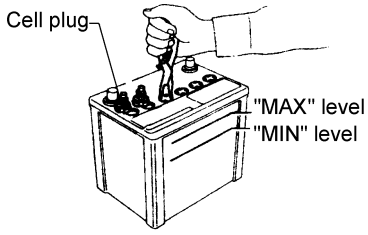

Sulphation

If battery is not maintained for a long time, the proportion of electrolyte is lower than 1.00,and the battery is totally discharged,it will cause sulfating of the battery pole penal.Although the sulfating battery pressure is very high at initial charging stage compared with normal battery,its current is not even enough smooth, as shown in the picture.

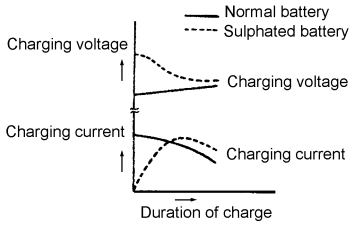

Specific gravity check

1.Read hydrometer and thermometer indications at eye level.

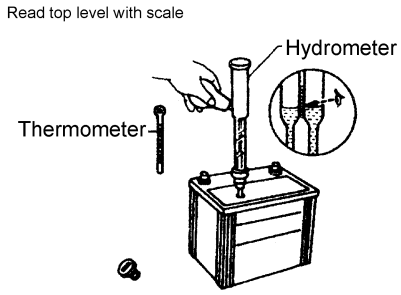

2.When the electrolyte level is too low, the battery can be lilted is raise the liquid level so the measurement could be taken easily.

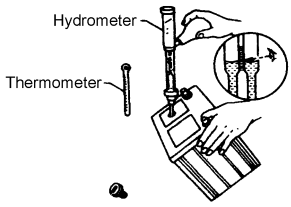

Battery charging

Charging per-fixed current

7.0A can be used for initial charging until average pressure of the single battery reaches to over 2.4V,then 3.0A can be changed for charging. If the pressure change of the battery is not over 0.05 V/h within 2 hours at the end of charging period,the proportion of the electrolyte does not change obviously,also taking temperature into consideration,then the battery can be regarded as fully charged.During the whole charging period, the temperature of electrolyte should be maintained around 20~40℃,taking the middle single battery measuring value as standard.

10.0A can be used for normal charging until average pressure of the single battery reaches to over 2.4V,then 5A can be changed for charging.If the pressure change of the battery is not over 0.05 V/h within 2 hours at the end of charging period,the proportion of electrolyte does not change obviously, also taking temperature into consideration,then the battery can be regarded as fully charged.During the whole charging period, the temperature of electrolyte should be maintained around 20~40 ℃ ,taking the middle single battery measuring value as standard.

Charging per-fixed pressure

Use fixed pressure 14.80 ± 0.05V for charging,the max. current should not be over 30A(During the initial charging period ,if the current is over this number,the pressure is allowed to reduce properly).If the pressure change of the battery is not over 0.1A/h within 2 hours at the end of charging period,the proportion of the electrolyte does not change obviously,also taking temperature into consideration,then the battery can be regarded as fully charged.During the whole charging period,the temperature of electrolyte should be maintained around 20~40 ℃ ,taking the middle single battery measuring value as standard.

When there is a lot of bubbles coming out of the battery,and the pressure is stable at the end of charging,the proportion and the height of the electrolyte should be adjusted to their specified value.

The electrolyte proportion of a fully charged battery is 1.28 ± 0.01(at 25 ℃).

Charging System

Note:

When installing the battery,be careful to make the earth pole of the battery same as the engine, which is negative earth pole, otherwise, diode of the engine will be damaged.

It is not allowed to use way of short circuit (making fire jump from armature B to the body) to check whether the motor generates power.

It is not allowed to dismount the main powered devices as battery while engine is in high running speed.

Common breakdown causes

Motor not generate power:

Rectifier damaged.

Brush blocked and not touch the sliding ring.

Stator coil cut and short circuited or earthed.

Rotator coil cut and short circuited or earthed.

Motor power not enough:

Motor driven belt too loose.

Individual rectifier damaged.

Brush not connected well.

Sliding ring dirty and damaged.

Rotator coil short circuited.

Battery internal short circuited.

Charging current too big:

Adjusting pressure of adjuster too high.

Battery internal short circuited.

Charging current too small:

Adjuster pressure value too low.

Motor abnormal noise:

Motor not well installed.

Motor bearing worn and loose.

Rotator and stator rub each other.

Coils of rotate and stator cut circuited, diode cut and short circuited and electric appears.

Starting System

Breakdown causes

Motor not running

Battery power not enough severely.

Starting relay not connected.

Armature coil cut and short circuited.

Drive gear shaft blocked.

Magnetic switch touching point burned and oxidized or not well adjusted

Ignition switch damaged or not connected well.

Battery connecting wire not connected well.

Brush wore and not well connected.

Magnetic switch coil cut and short circuited or earthed.

Flexible core of magnetic switch blocked.

Motor with weak running

Battery charging not well.

Motor not well installed with some mechanical break downs.

Rectifier dirty or damaged.

Starter idling.

Single-directed clutch sliding.

Battery connecting wire not well connected.

Brush worn and spring tension reduced.

Armature coil cut circuit somewhere.

Drive gears not well teeth.

Motor not stopping

Ignition switch blocked, touching point not disconnected.

Magnetic switch main touching point burned and sticked.

Starting relay touching point not disconnected.

Flying wheel gear ring and drive gear rough and sticked.

Combined Switches

Replacement

It is not necessary to dismount the combined switch base while replacing each switch.

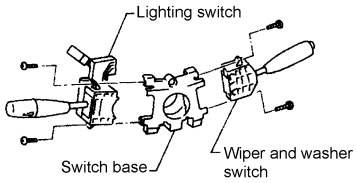

When dismount the combined switches, first dismount the connecting bolts.

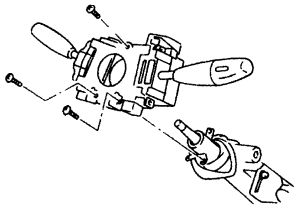

Front Head Lights

Bulb replacement

The front head light is half sealed, using a replaceable halogen osram lamp.The lamp can be replaced from the inner end without releasing off the whole head light assembly.

Hold the plastic bracket while replacing, do not touch the glass cover.

1.Release off the connecting wire harness from the rear end.

2.Turn the bulb anti-clockwise until it loose and off.

3.Open the rubber cover.

4.Be careful not shake or turn the bulb while removing.

5.The steps for installing is just on the contrary of removing.

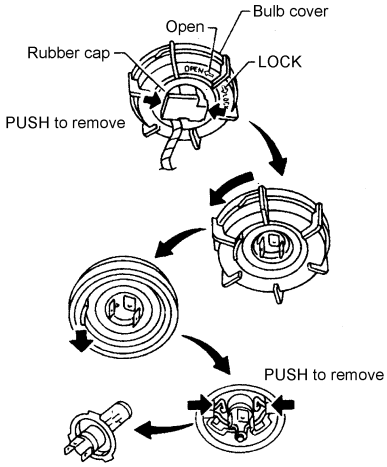

Note:
Do not place the bulb outside the reflecting cover for long time, otherwise, dust, gas or smoke will go into the light to affect the function of the light. So the bulb can be removed only when replacing.

Focus adjustment

Use a focus device, focus screen or head light tester when focusing.
Note:
.Keep all the tires at normal pressure.

Keep the vehicle and the tester at the same level.

No load on the vehicle, except the driver (on place the same weight on the driver's seat).

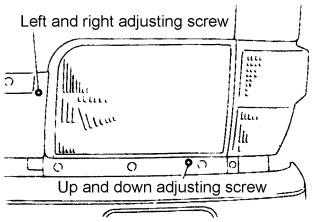

Low beam

Switch on the low beam.

Make beam-focus adjustment by adjusting screws.

First tighten all the adjusting screws,and then loosen them to adjust.

Beam forcusing adjustment

As shown in the picture,adjust the head light to make its main shaft of the light parallel with the center line of light shaft,and overlapped with point P.

The beam-focus adjustment shown in the picture is suitable to the right side drive area.

The dotted line in the picture stands for light shaft centerline.

"H": Paralleled center line

"WL": Distance between centerline of two head lights

"L": 5,000mm

"C": 138.4mm

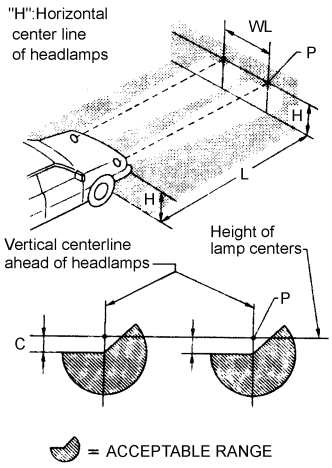

Combined Instrument Panel

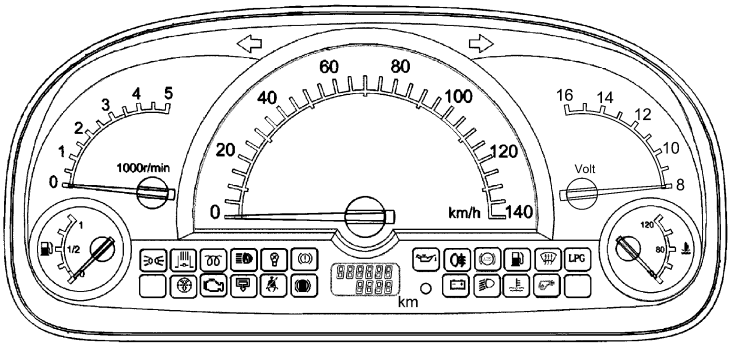

Windshield Washer and Wiper

Disassembly of wiper

Before disassembling, turn off the wiper switch.

Disassembly

Disassemble the wiper arm.

Disassemble the lock nuts, washer and seal rubber shim.

Disassemble the instrument assembly.

Disassemble the left and right guide pipe and ventilating pipe.

Prize the wiper connecting rod off the motor arm with a screw driver.

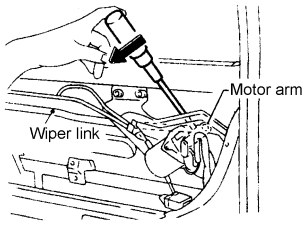

Note:

Be careful not to destroy the wiper connecting rod while disassembling.

Disassemble wiper motor-to-amplifier harness connector.

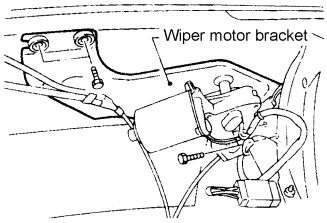

Disassemble the bolts on the wiper motor bracket.

Disassemble the motor arm.

Disassemble the wiper motor from the installation bracket.

Disassemble the wiper intermittent relay from the bracket.

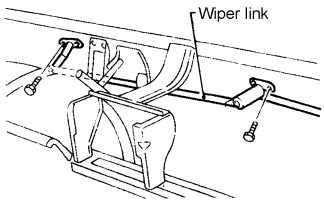

Disassemble the wiper connecting rod.

Installation

When installing, proceed the above procedures reversedly.

The wiper must be adjusted after installation.

Adjustment

Before installing the wiper arm,first the wiper motor,then turn it off (automatic stop).

Raise up the wiper brush,then place it on the surface of window glass right away to make the brush center on the location between "c" and "d",then tighten the nuts.

Spray some cleanser, start the wiper motor, and then switch it off.

Assure to make the wiper brush on "C" and "D" position,and then tighten wiper arm nuts to its specified torque.

Standard cab: "C" 45~55mm

"D" 45~55mm

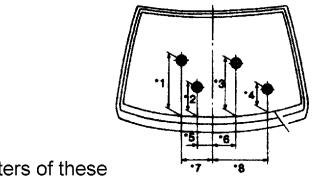

All the diameters of these circles are less than 60

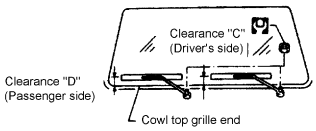

1:265	5:140
2:245	6:125
3:260	7:345
4:235	8:310

Unit:mm

Before reassembling the wiper arm,clean the core shaft as shown in the picture so that the arm will not be easily loose after assembling.

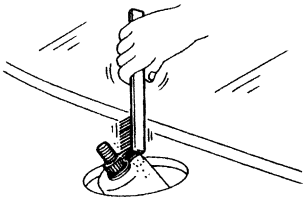

Adjust the cleaner nozzle

Adjust the cleaner nozzle with the tool as shown in the picture.

Max adjusting range: 10°

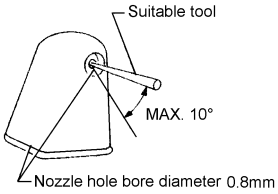

Check the wiper intermittent relay

Connect the wire as shown in the picture.

When the connecting pole is connected with negative pole of the battery, and the test lamp is on, the relay is in normal condition.

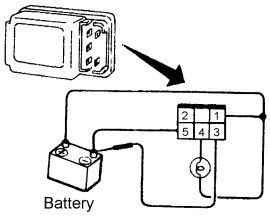

https://truckmanualshub.com/

Radio Cassette and Antenna

Adjustmen of the antenna rod

Adjust the antenna nutted rod under following condition:

MW (AM) signal can't be received or very weak.

After installing the new antenna, feeder cable, or radio, before the adjustment, check the connection of harness and antenna or feeder cable for correctness.

Pull out the antenna completely.

Switch on the radio and tuning to loud the volumn of the speaker.

Round the1400KHz, there is a broadcasting station whose signal is very weak (nearly can't be heard).

Turn the antenna left and right to find a optimum position for the receiving result.

Note:

Don't over turn the nutted rod antenna, half circle is allowed.
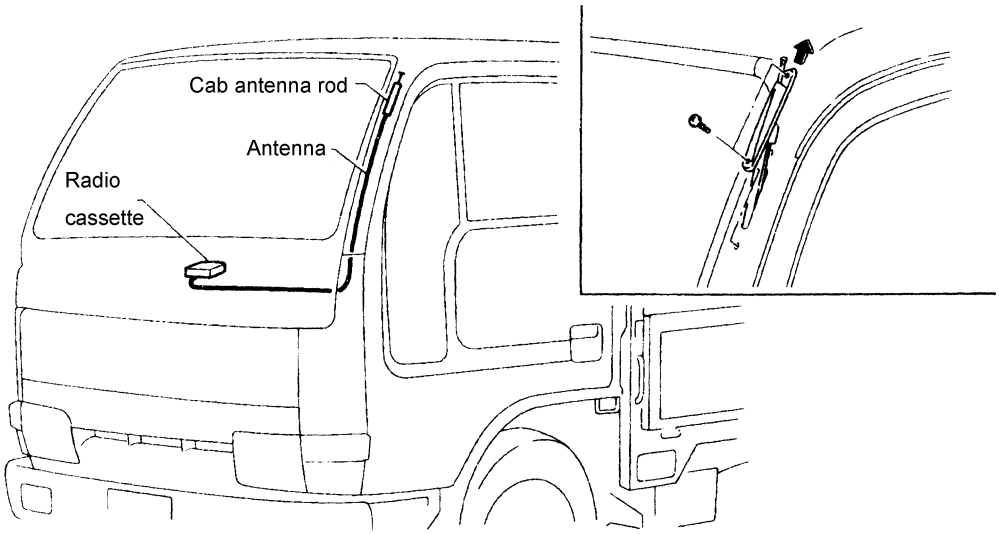
Antenna position