https://truckmanualshub.com/

SKYTRAK™

Operation & Safety Manual

Original Instructions
Keep this manual with machine at all times.

Models 6036, 6042, 8042, 10042, 10054

SN 0160069719 to Present including
0160065791, 0160065792, 0160065796, 0160065798, 0160065824, 0160065825, 0160065826, 0160069336, 0160069359, 0160069383, 0160069411, 0160069441, 0160069566, 0160069567 & 0160069568

31211018

Revised
July 17, 2017

JLG®
An Oshkosh Corporation Company

https://truckmanualshub.com/

CALIFORNIA PROPOSITION 65

BATTERY WARNING

Battery posts, terminals and related accessories contain lead and lead compounds, chemical known to the State of California to cause cancer and reproductive harm.

WASH HANDS AFTER HANDLING!

CALIFORNIA PROPOSITION 65

EXHAUST WARNING

Diesel Engine exhaust and some of its constituents are known to the State of California to cause cancer, birth defects and other reproductive harm.

https://truckmanualshub.com/

REVISION LOG

April 2, 2015 - A - Original Issue of Manual

April 17, 2015 - B - Revised pages d & 5-1.

April 30, 2015 - C - Revised page 9-4.

October 12, 2015 - D - Revised cover and pages d, 2-1, 2-4 thru 2-11, 3-7, 3-23, 4-5, 5-2, 6-2, 7-3 thru 7-6, 7-15 thru 7-21, 9-1, 9-3, 9-4 & 9-6.

April 11, 2016 - E - Revised covers and pages d, 2-5, 2-6, 2-8, 2-9, 2-14, 3-5, 3-20, 3-21, 4-4, 5-2, 5-3, 5-30, 5-31, 5-38 thru 5-41, 5-46 thru 5-48, 7-3, 7-4, 7-7 thru 7-9, 7-27, 7-28, 8-3, 9-1 thru 9-4, 9-7, 9-10 & 9-11.

April 10, 2017 - F - Revised pages 1-1, 1-4, 2-4, 2-5, 2-7, 2-8, 5-15, 5-16, 5-18, 5-20, 5-22, 5-24, 5-26, 5-28, 5-30, 5-32, 5-34, 5-36, 5-38, 5-40, 5-42, 5-44, 5-46, 5-48, 5-50 & rear cover.

July 17, 2017 - G - Revised pages c, 1-1, 1-2, 1-4, 1-10, 2-4 thru 2-8, 3-5, 3-7, 3-24, 4-3, 4-12, 4-13, 5-2, 5-6, 6-1, 6-2, 7-3 thru 7-7, 7-16, 7-23, 8-3 & 9-1 thru 9-4.

https://truckmanualshub.com/

This manual is a very important tool! Keep it with the machine at all times.

The purpose of this manual is to provide owners, users, operators, lessors, and lessees with the precautions and operating procedures essential for the safe and proper machine operation for its intended purpose.

Due to continuous product improvements, JLG Industries, Inc. reserves the right to make specification changes without prior notification. Contact JLG Industries, Inc. for updated information.

Operator Qualifications

The operator of the machine must not operate the machine until this manual has been read, training is accomplished and operation of the machine has been completed under the supervision of an experienced and qualified operator. Operation within the U.S.A. requires training per OSHA 1910.178.

Operators of this equipment must possess a valid, applicable driver's license, be in good physical and mental condition, have normal reflexes and reaction time, good vision and depth perception and normal hearing. Operator must not be using medication which could impair abilities nor be under the influence of alcohol or any other intoxicant during the work shift.

In addition, the operator must read, understand and comply with instructions contained in the following material furnished with the material handler:

- This Operation & Maintenance Manual
- Telehandler Safety Manual (ANSI only)
- All instructional decals and plates
- Any optional equipment instructions furnished

The operator must also read, understand and comply with all applicable Employer, Industry and Governmental rules, standards and regulations.

Modifications

Modifications to this machine may affect compliance with Industry Standards and/or Governmental Regulations. Any modification must be approved by JLG.

https://truckmanualshub.com/

This product must comply with all safety related bulletins. Contact JLG Industries, Inc. or the local authorized JLG representative for information regarding safety-related bulletins which may have been issued for this product.

JLG Industries, Inc. sends safety related bulletins to the owner of record of this machine. Contact JLG Industries, Inc. to ensure that the current owner records are updated and accurate.

JLG Industries, Inc. must be notified immediately in all instances where JLG products have been involved in an accident involving bodily injury or death of personnel or when damage has occurred to personal property or the JLG product.

***FOR*:**

- Accident Reporting and Product Safety Publications
- Current Owner Updates
- Questions Regarding Product Applications and Safety
- Standards and Regulations Compliance Information
- Questions Regarding Product Modifications

***CONTACT*:**

Product Safety and Reliability Department
JLG Industries, Inc.
13224 Fountainhead Plaza
Hagerstown, MD 21742
USA

or Your Local JLG Office

In USA:
Toll Free: 1-877-JLG-SAFE (1-877-554-7233)

Outside USA:
Phone: +1-717-485-6591

E-mail:
ProductSafety@JLG.com

https://truckmanualshub.com/

Other Publications Available

Service Manual 31211015

Parts Manual
- 6036 & 6042 31211016
- 8042, 10042 & 10054 31211017

Note: *The following standards may be referenced in this manual:*
ANSI is compliant to ANSI/ITSDF B56.6
AUS is compliant to AS 1418.19
CE is compliant to EN1459
Refer to the machine Serial Number Plate to identify the applicable compliance standard.

Machine Configuration

Two configurations of each machine are included in this manual. Determine if machine is equipped with Ultra Low Sulfur Fuel Decal (**1**) as indicated below.

- If equipped with the Ultra Low Sulfur decal, all specific references to this machine configuration will be referred to as Ultra Low Sulfur (**ULS**) from this point forward.
- If **not** equipped with the Ultra Low Sulfur decal, all specific references to this machine configuration will be referred to as Low Sulfur (**LS**) from this point forward.

Maximum engine power can be found on the decals (**2**) located on the inside of the side engine compartment doors.

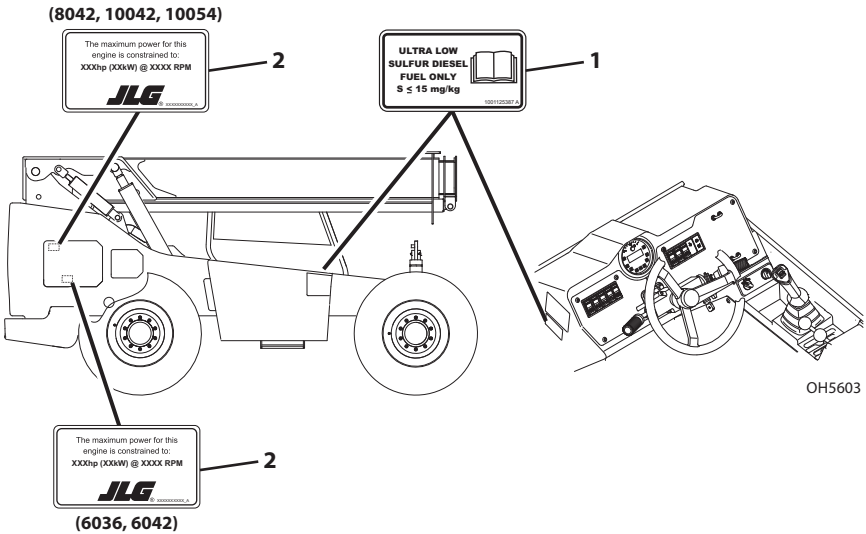

https://truckmanualshub.com/

TABLE OF CONTENTS

Revision Log

Read This First

Operator Qualifications ..... b
Modifications ..... b
Other Publications Available ..... d
Machine Configuration ..... d

Table of Contents

Section 1 - General Safety Practices

1.1 Hazard Classification System 1-1
Safety Alert System and Safety Signal Words 1-1
..... 1-1
1.2 General Precautions 1-1
1.3 Operation Safety 1-2
Electrical Hazards 1-2
Tip Over Hazard 1-4
Travel Hazard 1-7
Load Falling Hazard 1-8
Lifting Personnel 1-9
Driving Hazards on Slopes 1-10
Pinch Points and Crush Hazards 1-11
Fall Hazard 1-13
Chemical Hazards 1-14
1.4 ClearSky (if equipped) 1-15
Federal Communications Commission (FCC) Information for Users 1-15

Section 2 - Pre-Operation and Inspection

2.1 Preparation, Inspection and Maintenance 2-1
2.2 Pre-Operation Check and Inspection 2-2
2.3 Safety Decals 2-4
ANSI (if equipped) 2-4
ISO (if equipped) 2-7
2.4 Walk-Around Inspection 2-10
2.5 Warm-Up and Operational Checks 2-12
Warm-Up Check 2-12
Operational Check 2-12
2.6 Operator Cab 2-13
2.7 Windows 2-14
Cab Door Window (if equipped) 2-14

https://truckmanualshub.com/

Section 3 - Controls and Indicators

3.1 General....3-1
3.2 Controls....3-2
Dash Controls and Indicators....3-4
Instrument Cluster....3-6
Ignition....3-8
Park Brake....3-9
Parking Procedure....3-9
Transmission Control Lever....3-10
Boom Joystick....3-12
Auxiliary Hydraulic Joystick....3-13
Frame Level Joystick....3-14
Outrigger Switches (10042 & 10054)....3-15
Accessory Control Lever (if equipped)....3-16
3.3 Steer Modes....3-17
Steer Mode Change....3-17
3.4 Stabil-Trak™ System (6042, 8042, 10042 & 10054)....3-18
Free Pivot Mode....3-18
Slow Pivot Mode....3-18
Locked Mode....3-18
3.5 Boom/Outrigger Interlock System (10054)....3-19
Extend Interlock Mode....3-19
Outrigger Interlock Mode....3-19
3.6 Operator Seat....3-20
Adjustments....3-20
Seat Belt....3-22
3.7 Boom Angle and Extension Indicators....3-23
3.8 Reverse Sensing System (if equipped)....3-24

https://truckmanualshub.com/

Section 4 - Operation

4.1 Engine 4-1
- Starting the Engine 4-1
- Battery Boosted Starting 4-2
- Normal Engine Operation 4-3
- Shut-Down Procedure 4-3

4.2 After-Treatment System (ATS) (if equipped for ULS/85 or 110HP) 4-4
- Automatic Exhaust System Cleaning 4-4
- Stationary Exhaust System Cleaning 4-5

4.3 Operating with a Non-Suspended Load 4-6
- Lift Load Safely 4-6
- Picking Up a Load 4-6
- Transporting a Load 4-7
- Leveling Procedure 4-7
- Placing a Load 4-8
- Disengaging a Load 4-8

4.4 Operating with a Suspended Load 4-9
- Lift Load Safely 4-9
- Picking Up a Suspended Load 4-9
- Transporting a Suspended Load 4-10
- Leveling Procedure 4-10
- Placing a Suspended Load 4-11
- Disengaging a Suspended Load 4-11

4.5 Loading and Securing for Transport 4-12
- Tie Down 4-12
- Lifting 4-13

https://truckmanualshub.com/

Section 5 - Attachments

5.1 Approved Attachments 5-1
5.2 Unapproved Attachments 5-1
5.3 JLG Supplied Attachments 5-2
5.4 Telehandler/Attachment/Fork Capacity 5-4
5.5 Use of the Capacity Chart 5-5
Capacity Indicator Locations 5-5
Sample Capacity Chart 5-6
Example 5-8
5.6 Attachment Installation 5-10
Hydraulic Operated Attachment 5-12
5.7 Adjusting/Moving Forks 5-13
5.8 Attachment Operation 5-14
Carriage with Forks 5-15
Side Shift Carriage 5-16
Side Tilt Carriage 5-18
Swing Carriage 5-20
Dual Fork Positioning Carriage 5-22
Mast Carriage 5-24
Pipe Grapple 5-26
Fork Extension 5-28
Coupler Mounted Hook 5-30
Fork Mounted Hook 5-32
Bucket 5-34
Grapple Bucket 5-36
Bucket - Fork Mounted 5-38
Trash Hopper - Fork Mounted 5-40
Truss Boom 5-42
Material Handling Arm 5-44
Personnel Work Platform - Fork Mounted 5-46
Sweeper 5-48
Boom Mounted Lifting Lug 5-50

Section 6 - Emergency Procedures

6.1 Towing a Disabled Product 6-1
Moving Short Distances 6-1
Moving Longer Distances 6-1
6.2 Emergency Lowering of Boom 6-2
6.3 Emergency Exit from Enclosed Cab 6-3
Fixed Window (if equipped) 6-3
Latch Window (if equipped) 6-3

https://truckmanualshub.com/

Section 7 - Lubrication and Maintenance

7.1 Introduction 7-1
Clothing and Safety Gear 7-1
7.2 General Maintenance Instructions 7-2
7.3 Maintenance Schedules 7-3
Every 10 Hours 7-3
First 50 Hours 7-3
Every 50 Hours 7-4
First 250 Hours 7-4
Every 250 Hours 7-4
First 500 Hours 7-5
Every 500 Hours 7-5
Every 750 Hours 7-5
Every 1000 Hours 7-6
Every 1500 Hours 7-6
Every 2000 Hours or 2 Years 7-7
Every 4000 Hours or 3 Years 7-7
Every 5000 Hours or 4 Years 7-7
7.4 Lubrication Schedules 7-8
50 Hour Lubrication Schedule 7-8
250 Hour Lubrication Schedule 7-11
1000 Hour Lubrication Schedule 7-13
7.5 Operator Maintenance Instructions 7-14
Fuel System 7-14
Diesel Exhaust Fluid (DEF) System (if equipped for ULS/85 or 110HP) 7-16
Engine Oil 7-17
Air Intake System 7-18
Hydraulic Oil 7-22
Tires 7-23
Transmission Oil 7-25
Engine Cooling System 7-26
Brake Fluid (SN 0160074878 to Present) 7-27
Battery 7-28

Section 8 - Additional Checks

8.1 Stabil-Trak (6042, 8042, 10042 & 10054) 8-1
8.2 Boom/Outrigger Interlock (10054) 8-2
8.3 Reverse Sensing System (if equipped) 8-3

https://truckmanualshub.com/

Section 9 - Specifications

9.1 Product Specifications....9-1
Fluids....9-1
Capacities....9-4
Tires....9-6
Performance....9-7
Dimensions....9-9

Index

Inspection, Maintenance and Repair Log

https://truckmanualshub.com/

SECTION 1 - GENERAL SAFETY PRACTICES

1.1 HAZARD CLASSIFICATION SYSTEM

Safety Alert System and Safety Signal Words

DANGER

DANGER indicates an imminently hazardous situation which, if not avoided, will result in death or serious injury.

WARNING

WARNING indicates a potentially hazardous situation which, if not avoided, could result in death or serious injury.

CAUTION

CAUTION indicates a potentiality hazardous situation which, if not avoided, may result in minor or moderate injury.

1.2 GENERAL PRECAUTIONS

WARNING

Before operation, read and understand this manual. Failure to comply with the safety precautions listed in this manual could result in machine damage, property damage, personal injury or death.

- Hydraulic cylinders are subject to thermal expansion and contraction. This may result in changes to the boom and/or attachment position while the machine is stationary. Factors affecting thermal movement can include the length of time machine is stationary, hydraulic oil temperature, ambient air temperature and boom and/or attachment position.
- Precautions to avoid all hazards in the work area must be taken by the user before and during operation of the machine.

https://truckmanualshub.com/

1.3 OPERATION SAFETY

Note: *The manufacturer has no direct control over machine application and operation. Therefore, safety issues listed in this manual are non-exhaustive. The user and operator are responsible for conforming with good safety practices.*

Electrical Hazards

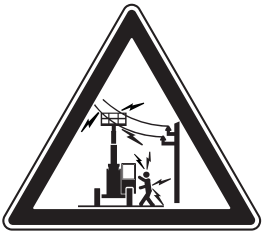

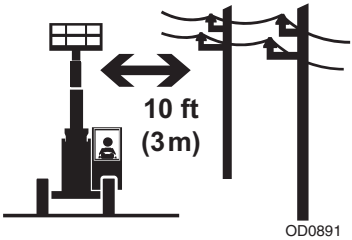

- This machine is not insulated and does not provide protection from contact or being near electrical current.
- Always check for power lines before raising the boom.
- Maintain distance from electrical lines, apparatus, or any energized (exposed or insulated) parts according to the Minimum Approach Distance (MAD).

Voltage Range (Phase to Phase)	Minimum Approach Distance (MAD)
0 to 50 KV	10 ft (3 m)
Over 50KV to 200 KV	15 ft (5 m)
Over 200 KV to 350 KV	20 ft (6 m)
Over 350 KV to 500 KV	25 ft (8 m)
Over 500 KV to 750 KV	35 ft (11 m)
Over 750 KV to 1000 KV	45 ft (14 m)

Note: *This requirement shall apply except where employer, local or governmental regulations are more stringent.*

- Allow for machine movement and electrical line swaying.
- Maintain a clearance of at least 10 ft (3m) between any part of the machine and its occupants, their tools and their equipment from any electrical line or apparatus carrying up to 50,000 volts. One foot additional clearance is required for every additional 30,000 volts or less.

https://truckmanualshub.com/

- The minimum approach distance may be reduced if insulating barriers are installed to prevent contact, and the barriers are rated for the voltage of the line being guarded. These barriers shall not be part of (or attached to) the machine. The minimum approach distance shall be reduced to a distance within the designed working dimensions of the insulating barrier. This determination shall be made by a qualified person in accordance with the employer, local, or governmental requirements for work practices near energized equipment.

DANGER

Do not maneuver machine or personnel inside prohibited zone (MAD). Assume all electrical parts and wiring are energized unless known otherwise.

https://truckmanualshub.com/

Tip Over Hazard

General

- For additional load requirements, refer to the appropriate capacity chart.

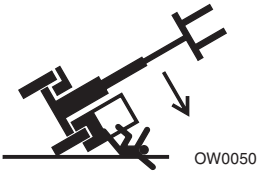

- Never use an attachment without the appropriate original equipment manufacturer (OEM) approved capacity chart installed on the telehandler.
- Understand how to properly use the capacity charts located in cab.
- **DO NOT** exceed rated lift capacity.
- Be sure that the ground conditions are able to support the machine.
- Be aware of wind conditions. Wind may cause load swing and dangerous side loads.
- Keep the machine a minimum of 2 ft (0,6 m) from holes, drop-offs, obstructions, debris, concealed holes and other potential hazards at ground level.

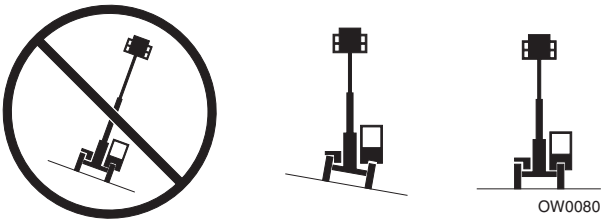

- **DO NOT** raise boom unless frame is level (0 degrees), unless otherwise noted on capacity chart.

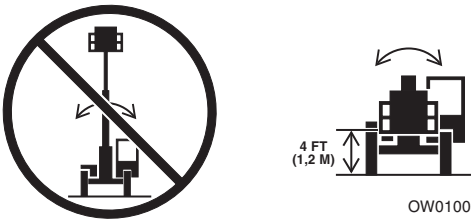

- **DO NOT** level machine with boom/attachment above 4 ft (1,2 m).
  (AUS—**DO NOT** level machine with load more than 11.8 in (300 mm) above ground surface.)

https://truckmanualshub.com/

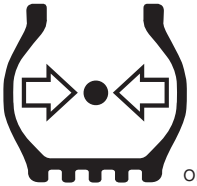
OH2291

- **MAINTAIN proper tire pressure** at all times. If proper tire pressures are not maintained, this machine could tip over.
- Refer to manufacturer's specifications for proper fill ratio and pressure requirements for tires equipped with ballast.

OH20911

- Always wear seat belt.
- Keep head, arms, hands, legs and all other body parts inside operator's cab at all times.

OH2221

If telehandler starts to tip over:

- **DO NOT** JUMP
- BRACE YOURSELF and STAY WITH THE MACHINE
- KEEP YOUR SEAT BELT FASTENED
- HOLD ON FIRMLY
- LEAN AWAY FROM THE POINT OF IMPACT

https://truckmanualshub.com/

Non-Suspended Load

OD0901

- **DO NOT** drive with boom raised.

Suspended Load

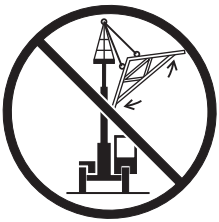

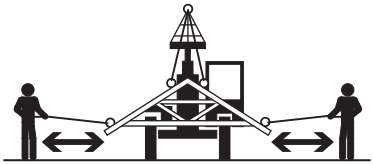

OW0150

- Tether suspended loads to restrict movement.
- Weight of all rigging (slings, etc.) must be included as part of load.
- **DO NOT** attempt to use telehandler frame-leveling to compensate for load swing.
- Keep heavy part of load closest to attachment.
- Never drag the load; lift vertically.

  When driving with a suspended load:
  - Start, travel, turn and stop slowly to prevent load from swinging.
  - **DO NOT** extend boom.
  - **DO NOT** raise the load more than 300 mm (11.8 in) above ground surface or the boom more than 45°.
  - **DO NOT** exceed walking speed.

https://truckmanualshub.com/

Travel Hazard

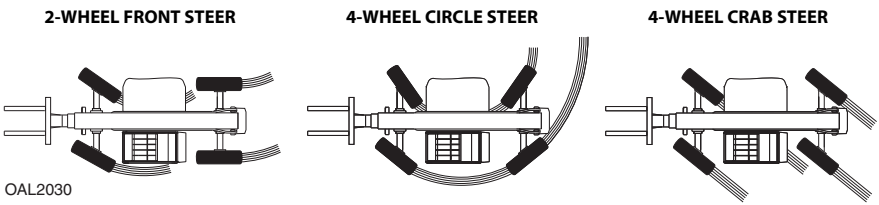

- Steering characteristics differ between steer modes. Identify the steer mode settings of the telehandler being operated.
- **DO NOT** change steer modes while traveling. Steer modes must be changed while telehandler is stationary.
- Visually verify proper wheel alignment after each steer mode change.
- Ensure that adequate clearance is provided for both rear tail swing and front fork swing.
- Look out for and avoid other personnel, machinery and vehicles in the area. Use a spotter if you DO NOT have a clear view.
- Before moving be sure of a clear path and sound horn.
- When driving, retract boom and keep boom/attachment as low as possible while maintaining visibility of mirrors and maximum visibility of path of travel.
- Always look in the direction of travel.
- Always check boom clearances carefully before driving underneath overhead obstructions. Position attachment/load to clear obstacles.
- When driving in high speed, use only front wheel steer (if steering modes are selectable).
- Telehandlers equipped with solid or foam filled tires should not be used in applications requiring excessive roading or driving extended distances. In the event an application requires excessive roading or driving expanded distances, it is recommended to use telehandlers not equipped with solid or foam filled tires.

https://truckmanualshub.com/

Load Falling Hazard

- Never suspend load from forks or other parts of carriage weldment. Use only approved lift points.
- **DO NOT** burn or drill holes in fork(s).
- Forks must be centered under load and spaced apart as far as possible.

https://truckmanualshub.com/

Lifting Personnel

- When lifting personnel, **USE ONLY** an approved personnel work platform, with proper capacity chart displayed in the cab.

- **DO NOT** drive machine from cab when personnel are in platform.

https://truckmanualshub.com/

Driving Hazards on Slopes

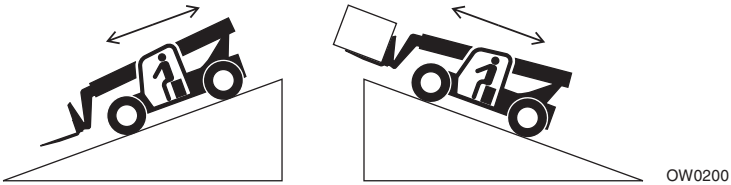

To maintain sufficient traction and braking capabilities, travel on slopes as follows:

- When unloaded, drive with forks pointed downhill.
- When loaded, drive with the forks pointed uphill.
- For additional travel requirements, refer to the appropriate capacity chart.
- To avoid overspeeding the engine and drivetrain when driving down slopes, downshift to a lower gear before going downhill and use the service brake as necessary to maintain a slow speed. **DO NOT shift into neutral and coast downhill**.
- Avoid excessively steep slopes or unstable surfaces. To avoid tip over **DO NOT** drive across excessively steep slopes under *any* circumstances.
- Avoid turning on a slope. Never engage “inching” or shift to “Neutral” when going downhill.
- **DO NOT** park on a slope.

https://truckmanualshub.com/

Pinch Points and Crush Hazards

Stay clear of pinch points and rotating parts on the telehandler.

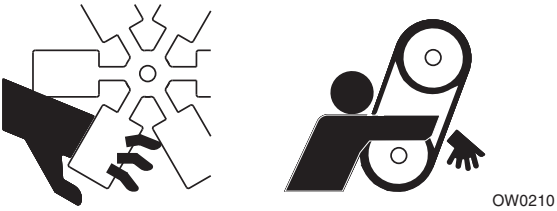

- Stay clear of moving parts while engine is running.

- Keep clear of steering tires and frame or other objects.

- Keep clear from under boom.

https://truckmanualshub.com/

- Keep clear of boom holes.

- Keep arms and hands clear of attachment tilt cylinder.

- Keep hands and fingers clear of carriage and forks.

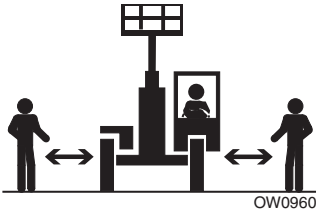

- Keep others away while operating.

https://truckmanualshub.com/

Fall Hazard

- Enter using the proper hand holds and steps provided. Always maintain 3-point contact when mounting or dismounting. Never grab control levers or steering wheel when mounting or dismounting the machine.
- **DO NOT** get off the machine until the shutdown procedure on page 4-3 has been performed.

- **DO NOT** carry riders. Riders could fall off machine causing death or serious injury.

https://truckmanualshub.com/

Chemical Hazards

Exhaust Fumes

- **DO NOT** operate machine in an enclosed area without proper ventilation.
- **DO NOT** operate the machine in hazardous environments unless approved for that purpose by JLG and site owner. Sparks from the electrical system and the engine exhaust can cause an explosion.

Flammable Fuel

OW0300

- **DO NOT** fill the fuel tank or service the fuel system near an open flame, sparks or smoking materials. Engine fuel is flammable and can cause a fire and/or explosion.

Hydraulic Fluid

OW0950

- **DO NOT** attempt to repair or tighten any hydraulic hoses or fittings while the engine is running or when the hydraulic system is under pressure.
- Stop engine and relieve trapped pressure. Fluid in the hydraulic system is under enough pressure that it can penetrate the skin.
- **DO NOT** use your hand to check for leaks. Use a piece of cardboard or paper to search for leaks. Wear gloves to protect hands from spraying fluid.

https://truckmanualshub.com/

1.4 CLEARSKY (IF EQUIPPED)

Federal Communications Commission (FCC) Information for Users

FCC Statement Regarding Interference

This equipment has been tested and found to comply with the limits for a Class B digital device, pursuant to Part 15 of the FCC Rules. These limits are designed to provide reasonable protection against harmful interference in a residential installation. This equipment generates, uses and can radiate radio frequency energy and, if not installed and used in accordance with the instructions, may cause harmful interference to radio communications. However, there is no guarantee that interference will not occur in a particular installation. If this equipment does cause harmful interference to radio or television reception, which can be determined by turning the equipment off and on, the user is encouraged to try to correct the interference by one or more of the following measures:

- Reorient or relocate the receiving antenna.
- Increase the separation between the equipment and receiver.
- Connect the equipment into an outlet on a circuit different from that to which the receiver is connected.
- Consult the dealer or an experienced radio/TV technician for help.

This device complies with Part 15 of the FCC Rules. Operation is subject to the following two conditions: (1) this device may not cause harmful interference, and (2) this device must accept any interference received, including interference that may cause undesired operation.

Changes or modifications not expressly approved by the party responsible for compliance could void the user's authority to operate the equipment.

https://truckmanualshub.com/

Notice Regarding Radio Frequency Radiation Exposure

Do not operate your unit when a person is within eight inches (20 centimeters) of the antenna. A person or object within eight inches (20 centimeters) of the antenna could impair call quality and may cause the unit to operate at a higher power level than necessary, as well as expose that person to RF energy in excess of that established by the FCC RF Exposure Guidelines.

Important: The unit must be installed in a manner that provides a minimum separation distance of eight inches (20 centimeters) or more between the antenna and persons and just not be co-located or operate in conjunction with any other antenna or transmitter in order to satisfy FCC RF exposure requirements for mobile transmitting devices.

Important: To comply with the FCC RF exposure limits and to satisfy the categorical exclusion requirements for mobile transmitters, the requirements described in the following section, “Antenna Installation”, must be met.

Antenna Installation

A minimum separation distance of eight inches (20 centimeters) must be maintained between the antenna and all persons.

The combined cable loss and antenna gain must not exceed +7.5 dBi (850 band). The combined cable loss and antenna gain must not exceed +2.5 dBi and total system output must not exceed 2.0W EIRP in the PCS (1900) band in order to comply with the EIRP limit of 24.232 (b). OEM installers must be provided with antenna installation instruction and transmitter operating conditions for satisfying RF exposure compliance.

https://truckmanualshub.com/

SECTION 2 - PRE-OPERATION AND INSPECTION

2.1 PREPARATION, INSPECTION AND MAINTENANCE

The following table covers the periodic machine inspections and maintenance required. Consult local regulations for further requirements for telehandlers. The frequency of inspections and maintenance must be increased as necessary when the machine is used in a harsh or hostile environment, if the machine is used with increased frequency, or if the machine is used in a severe manner.

Inspection and Maintenance				
Type	**Frequency**	**Primary Responsibility**	**Service Qualification**	**Reference**
Pre-Operation Inspection	Beginning of each work shift or at each change of operator.	User or Operator	User or Operator	Operation & Safety Manual
Pre-Delivery Inspection (see note)	Before each sale, lease or rental delivery.	Owner, Dealer or User	Qualified Mechanic	Service Manual and applicable Inspection form.
Preventative Maintenance	At intervals as specified in the Service Manual and/ or the Maintenance Charts located on the machine.	Owner, Dealer or User	Qualified Mechanic	Service Manual and Maintenance Charts

Note: *Inspection forms are available.*

https://truckmanualshub.com/

2.2 PRE-OPERATION CHECK AND INSPECTION

Note: *Complete all required maintenance before operating unit.*

WARNING

FALL HAZARD. Use extreme caution when checking items beyond your normal reach. Use an approved ladder.

The pre-operation check and inspection, performed at beginning of each work shift or at each change of operator, should include the following:

1. **Cleanliness**—Check all surfaces for leakage (oil, fuel or battery fluid) or foreign objects. Report any leakage to the proper maintenance personnel.
2. **Structure**—Inspect the machine structure for dents, damage, weld or parent metal cracks or other discrepancies.

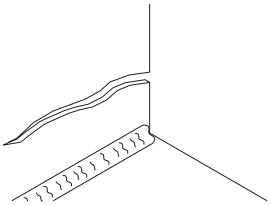

PARENT METAL CRACK

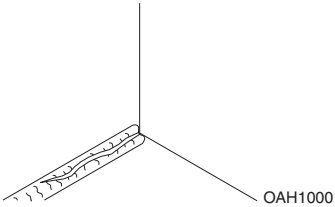

WELD CRACK

3. **Safety Decals**—Ensure all safety decals are legible and in place. Clean or replace as required. See page 2-4 for details.
4. **Operation and Safety Manuals**—Operation & Safety Manual and AEM Safety Manual (ANSI only) are located in cab manual holder.
5. **Walk-Around Inspection**—See page 2-10 for details.
6. **Fluid Levels**—Check fluids, including fuel, diesel exhaust fluid (DEF), hydraulic oil, engine oil, transmission fluid and coolant. When adding fluids, refer to Section 7- Lubrication and Maintenance and Section 9- Specifications to determine proper type and intervals. Before removing filler caps or fill plugs, wipe all dirt and grease away from the ports. If dirt enters these ports, it can severely reduce component life.
7. **Attachments/Accessories**—Ensure correct capacity charts are installed on telehandler. If provided, reference Operation & Safety Manual of each attachment or accessory installed for specific inspection, operation and maintenance instructions.

https://truckmanualshub.com/

8. **Operational Check**—Once walk-around inspection is complete, perform a warm-up and operational check (see page 2-12) of all systems in an area free of overhead and ground level obstructions. See Section 3- Controls and Indicators for more specific operating instructions.

WARNING

If telehandler does not operate properly, immediately bring machine to a stop, lower boom and attachment to ground and stop the engine. Determine cause and correct before continued use.

https://truckmanualshub.com/

2.3 SAFETY DECALS

Ensure all **DANGER**, **WARNING**, **CAUTION** and instructional decals and proper capacity charts are legible and in place. Clean and replace as required.

ANSI (if equipped)

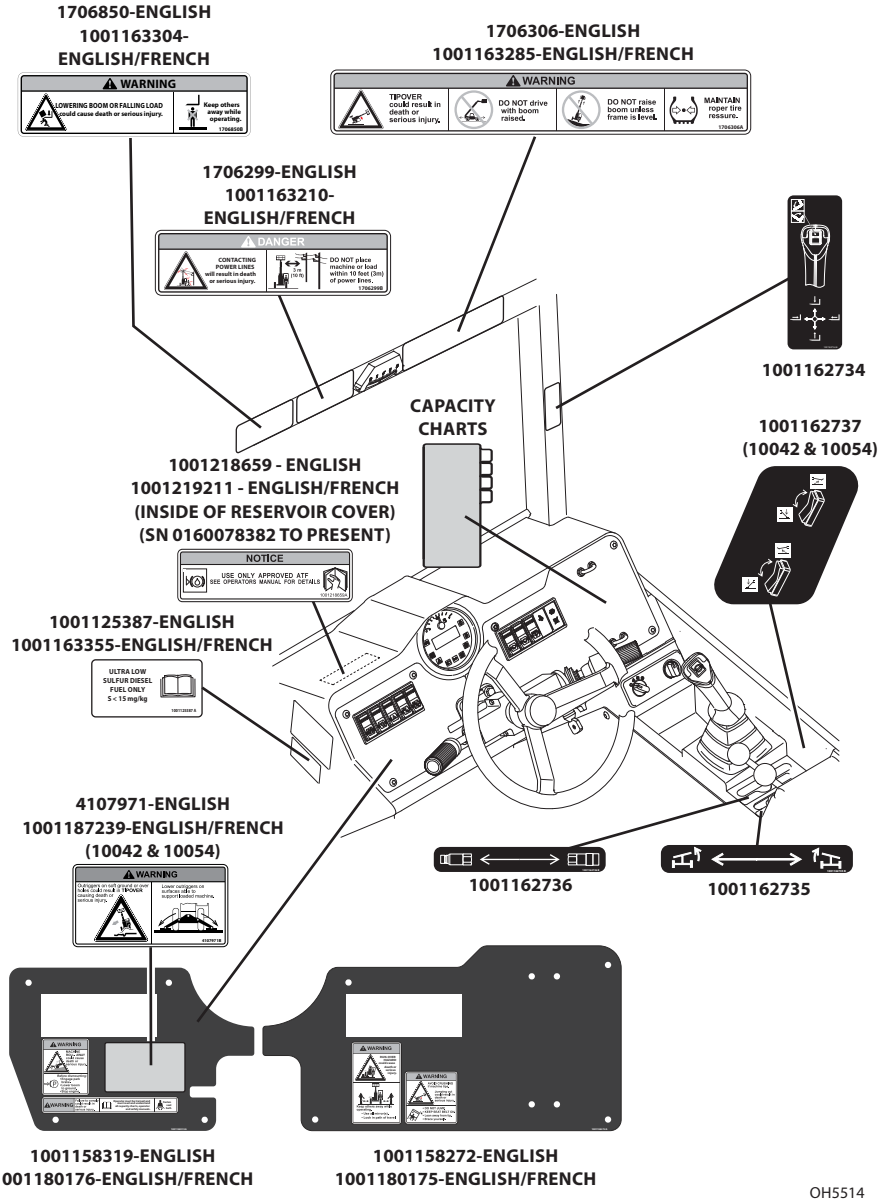

OH5514

https://truckmanualshub.com/

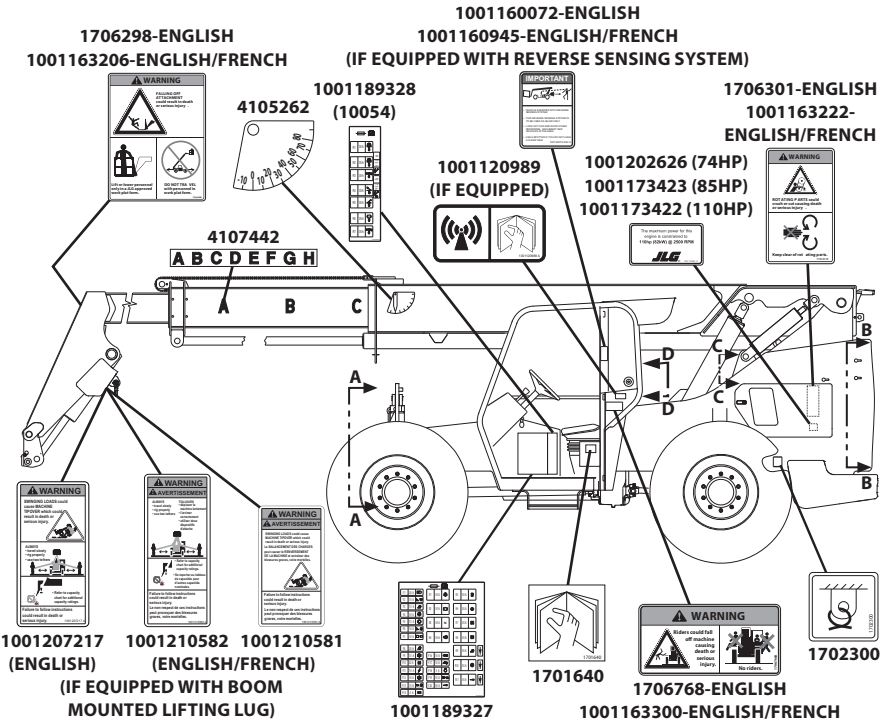

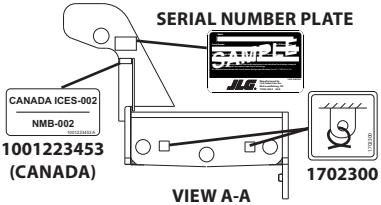

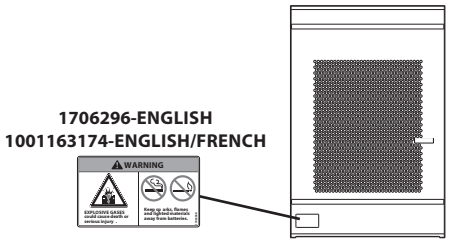

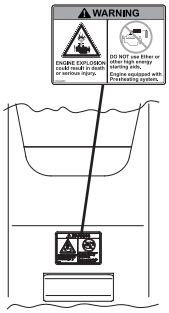

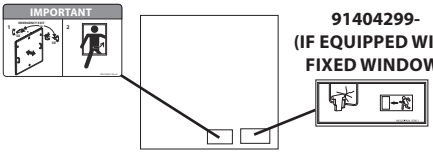

OH5525

https://truckmanualshub.com/

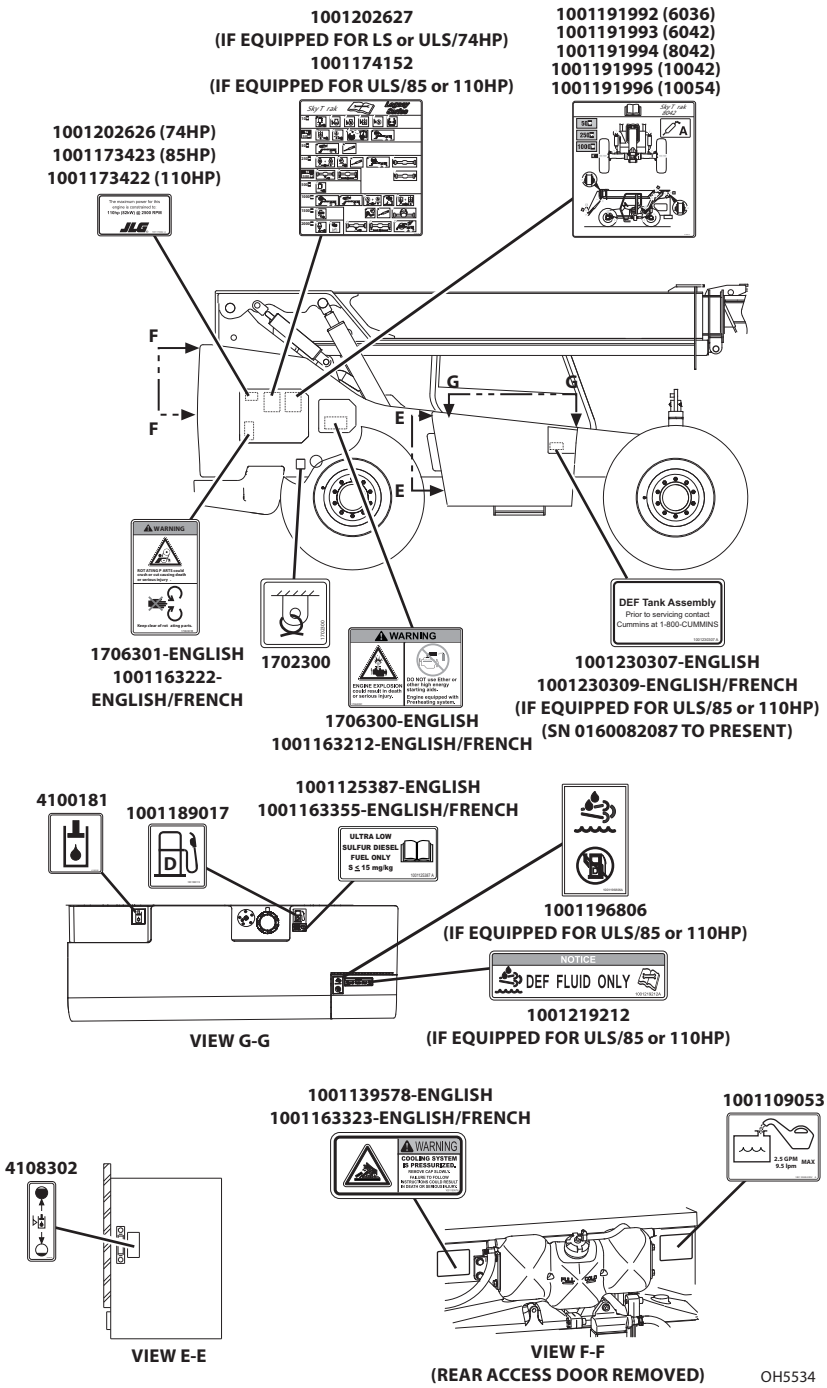

https://truckmanualshub.com/

ISO (if equipped)

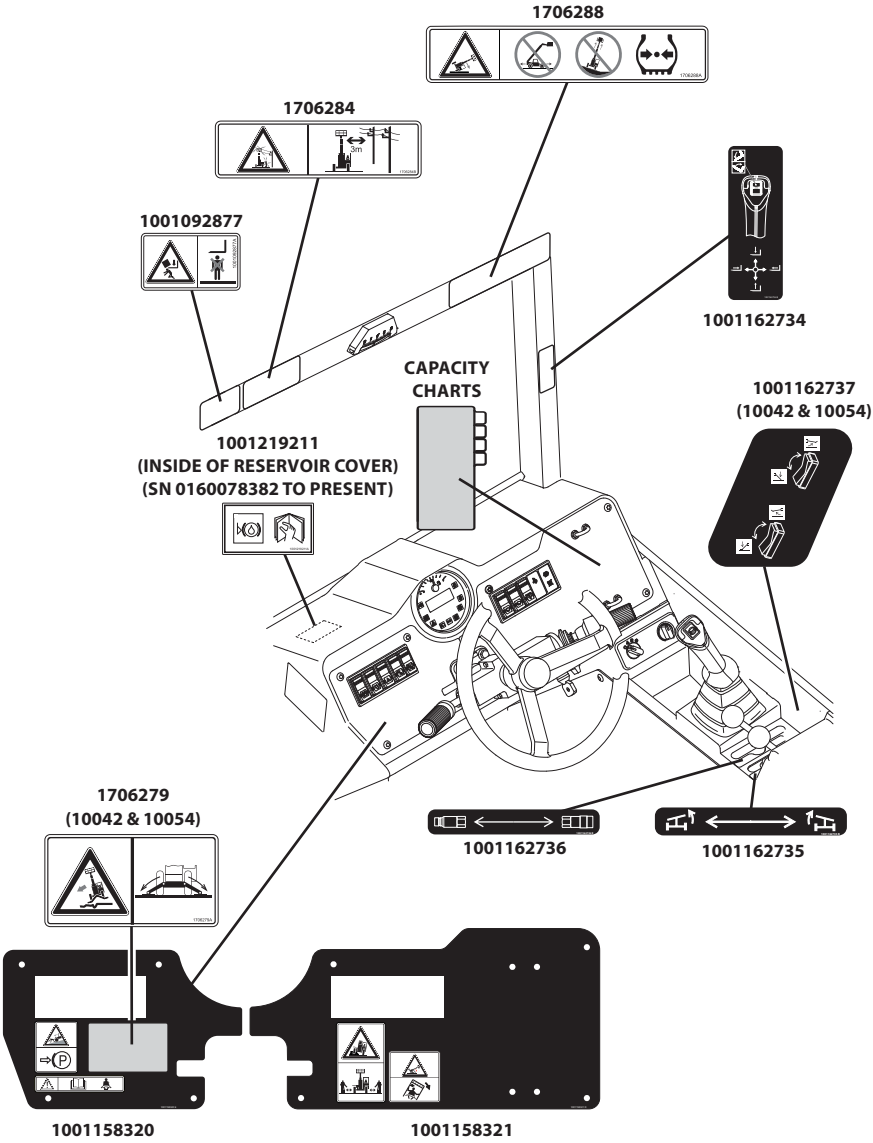

OH5562

https://truckmanualshub.com/

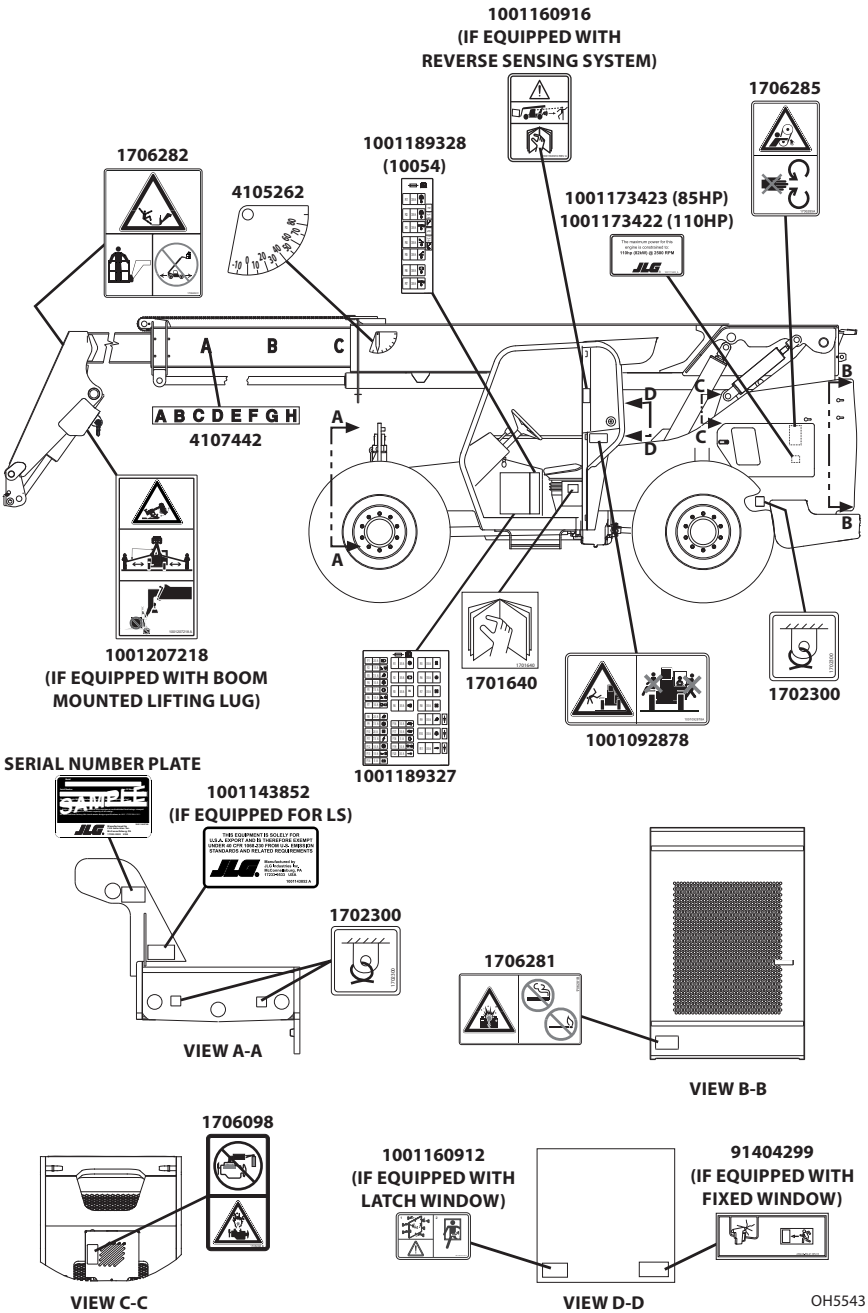

https://truckmanualshub.com/

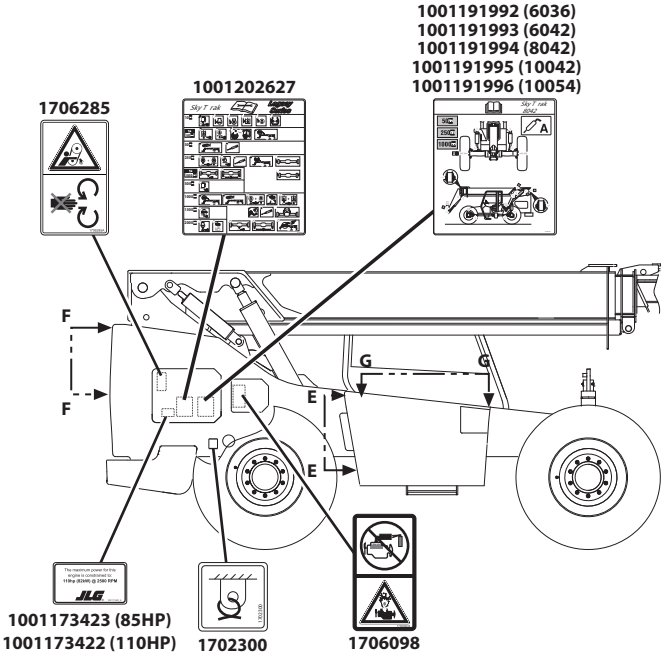

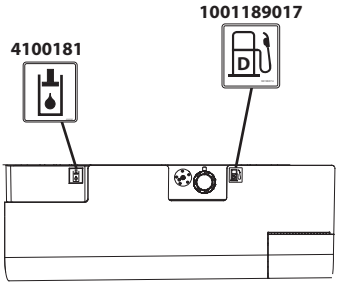

VIEW G-G

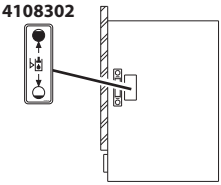

VIEW E-E

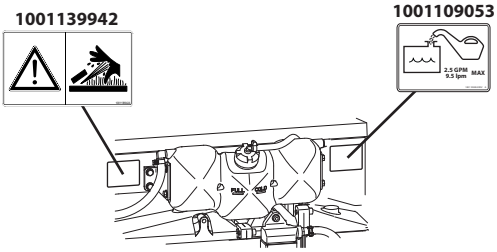

VIEW F-F
(REAR ACCESS DOOR REMOVED)

OH5550

https://truckmanualshub.com/

2.4 WALK-AROUND INSPECTION

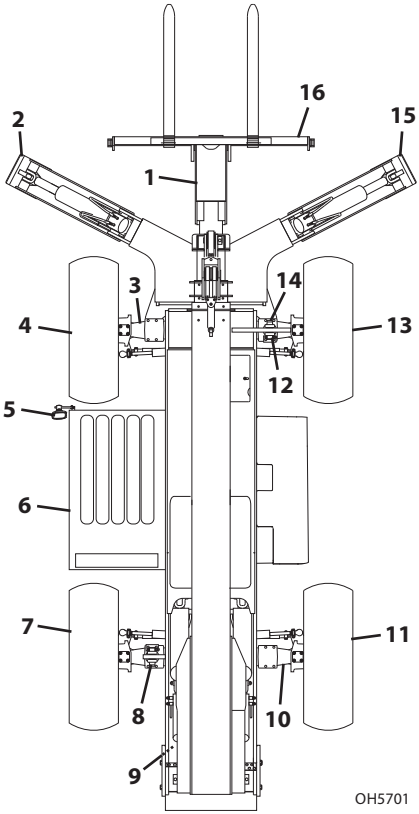

Begin your walk-around inspection at item 1, as noted below. Continue to your right (counterclockwise when viewed from top) checking each item in sequence.

INSPECTION NOTE: On all components, make sure there are no loose or missing parts, that they are securely fastened and no visible leaks or excessive wear exists in addition to any other criteria mentioned. Inspect all structural members including attachment for cracks, excessive corrosion and other damage.

1. **Boom Sections and Lift, Tilt, Extend/Retract, Compensating (Slave) Cylinders**
   - Check front, top, side and rear wear pads for presence of grease.
   - Pivot pins secure; hydraulic hoses undamaged, not leaking.
2. ***Left Outrigger*** (10042 & 10054)—Pins secure; hydraulic hoses and cylinder undamaged, not leaking.
3. ***Front Axle***—Steer cylinders undamaged, not leaking; pivot pins secure; hydraulic hoses undamaged, not leaking.

https://truckmanualshub.com/

4. ***Wheel/Tire Assembly***—Properly inflated and secured; no loose or missing lug nuts. Inspect for worn tread, cuts, tears or other discrepancies.
5. ***Mirrors***—Clean and undamaged.
6. **Cab and Electrical**
   - General appearance; no visible damage.
   - Frame level indicator and window glass undamaged and clean.
   - Gauges, switches, joysticks, foot controls and horn operational.
   - Emergency escape hammer in place (fixed window only).
   - Check seat belt for damage, replace belt if frayed or cut webbing, damaged buckles or loose mounting hardware.
7. ***Wheel/Tire Assembly***—Properly inflated and secured; no loose or missing lug nuts. Inspect for worn tread, cuts, tears or other discrepancies.
8. ***Stabil-Trak Cylinder***—Pins secure; hydraulic hoses undamaged, not leaking.
9. **Engine Compartment**
   - Drive belts, check condition and replace as required.
   - Engine mounts—See inspection note.
   - Battery cables tight, no visible damage or corrosion.
   - Engine access doors closed and properly secured.
10. ***Rear Axle***—Steer cylinders undamaged, not leaking; pivot pins secure; hydraulic hoses undamaged, not leaking.
11. ***Wheel/Tire Assembly***—Properly inflated and secured; no loose or missing lug nuts. Inspect for worn tread, cuts, tears or other discrepancies.
12. ***Mirrors***—Clean and undamaged.
13. ***Wheel/Tire Assembly***—Properly inflated and secured; no loose or missing lug nuts. Inspect for worn tread, cuts, tears or other discrepancies.
14. ***Frame Level Cylinder***—Pins secure; hydraulic hoses undamaged, not leaking.
15. ***Right Outrigger*** (10042 & 10054)—Pins secure; hydraulic hoses and cylinder undamaged, not leaking.
16. ***Attachment***—Properly installed, see *"Attachment Installation"* on page 5-10.

https://truckmanualshub.com/

2.5 WARM-UP AND OPERATIONAL CHECKS

Warm-Up Check

During warm-up period, check:

1. Heater, defroster and windshield wiper (if equipped).
2. Check all lighting systems (if equipped) for proper operation.
3. Adjust mirror(s) for maximum visibility.

WARNING

CUT/CRUSH/BURN HAZARD. Keep engine cover closed while engine is running except when checking transmission oil level.

Operational Check

When engine warms, perform an operational check:

1. Service brake and parking brake operation.
2. Forward and reverse travel.
3. Each gear.
4. Steering in both directions with engine at low idle (steering lock to lock will not be reached). Check in each steering mode.
5. Horn and back-up alarm. Must be audible from inside operators cab with engine running.
6. All joystick functions operate smoothly and correctly.
7. Perform any additional checks described in Section 8.

https://truckmanualshub.com/

2.6 OPERATOR CAB

The telehandler is equipped with an open or enclosed ROPS/FOPS cab.

WARNING

Never operate telehandler unless the overhead guard, cab structure and right side glass or screen are in good condition. Any modification to this machine must be approved by JLG to assure compliance with ROPS/FOPS certification for this cab/machine configuration. If the overhead guard or cab structure is damaged, the **CAB CANNOT BE REPAIRED**. It must be **REPLACED**.

WARNING

Never drill, cut, and/or weld to cab. Any modification to this machine must be approved by JLG to assure compliance with machine configuration. If unauthorized drilling, cutting and/or welding is present, the cab must be **REPLACED**.

https://truckmanualshub.com/

2.7 WINDOWS

Keep all windows and mirrors clean and unobstructed.

Cab Door Window (if equipped)

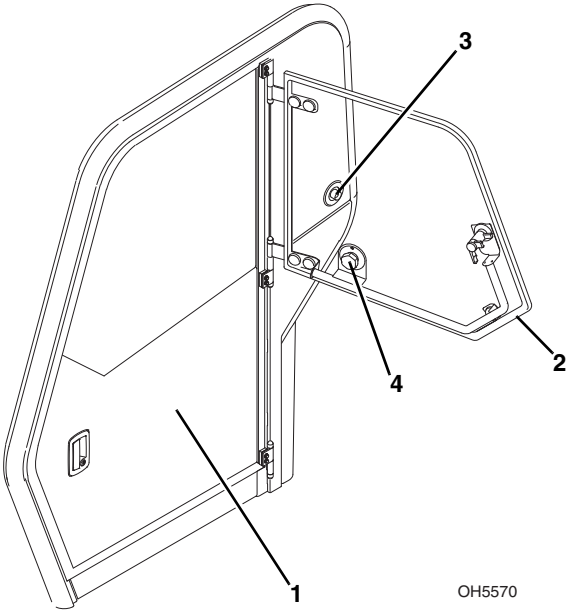

- Cab door window (**2**) must either be latched open or closed during operation.
- Open cab door window and secure it in latch (**3**).
- Turn knob (**4**) to unlatch window.

NOTICE

EQUIPMENT DAMAGE. Cab door (**1**) must be closed during operation. Failure to do so may result in machine damage.

https://truckmanualshub.com/

SECTION 3 - CONTROLS AND INDICATORS

3.1 GENERAL

This section provides the necessary information needed to understand control functions.

NOTICE

EQUIPMENT DAMAGE. When a red light illuminates, immediately bring machine to a stop, lower boom and attachment to ground and stop the engine. Determine cause and correct before continued use.

https://truckmanualshub.com/

3.2 CONTROLS

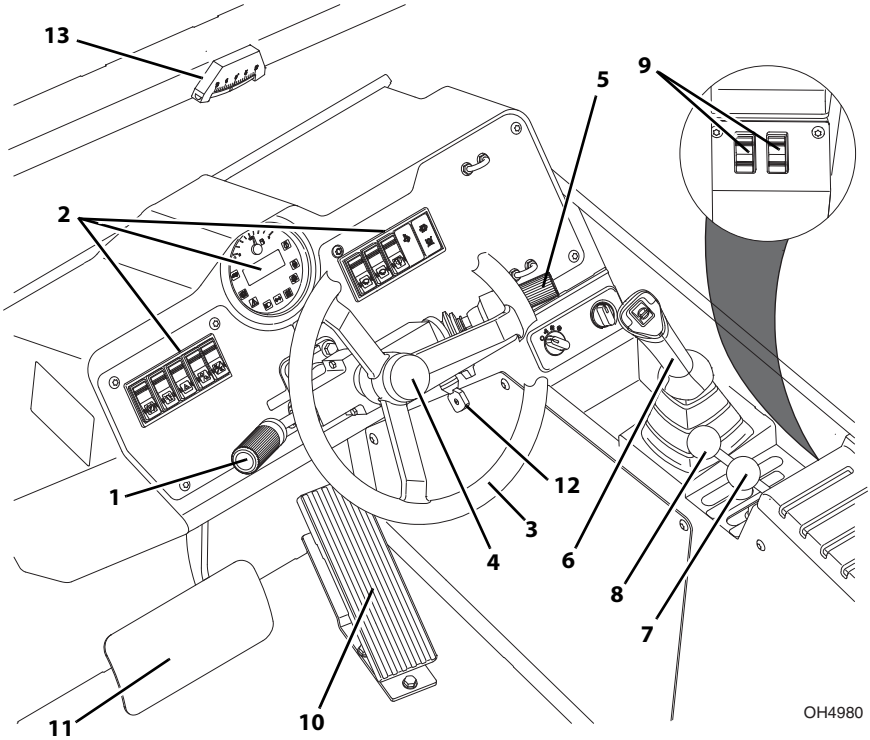

https://truckmanualshub.com/

1. ***Transmission Control Lever*:** See page 3-10.
2. ***Dash Controls and Indicators:*** See page 3-4.
3. ***Steering Wheel:*** Turning the steering wheel to the left or right steers the machine in the corresponding direction. Three steering modes are available. See *"Steer Modes"* on page 3-17.
4. ***Horn:*** Press to sound horn.
5. ***Accessory Control Lever (if equipped):*** See page 3-16.
6. ***Boom Joystick:*** See page 3-12.
7. ***Frame Level Joystick:*** See page 3-14.
8. ***Auxiliary Hydraulic Joystick:*** See page 3-13.
9. ***Outrigger Switches (10042 & 10054):*** See page 3-15.
10. ***Accelerator Pedal:*** Pressing down the pedal increases engine and hydraulic speed.
11. ***Service Brake Pedal:*** The further the pedal is depressed, the slower the travel speed. (6042, 8042, 10042 & 10054 Only) With service brake pedal depressed and boom angles above 40°, the locked mode of the Stabil-Trak system is activated. See page 3-18.
12. ***Ignition Switch:*** Key activated. See page 3-8.
13. ***Frame Level Indicator:*** Enables operator to determine the left to right level condition of the telehandler.

https://truckmanualshub.com/

Dash Controls and Indicators

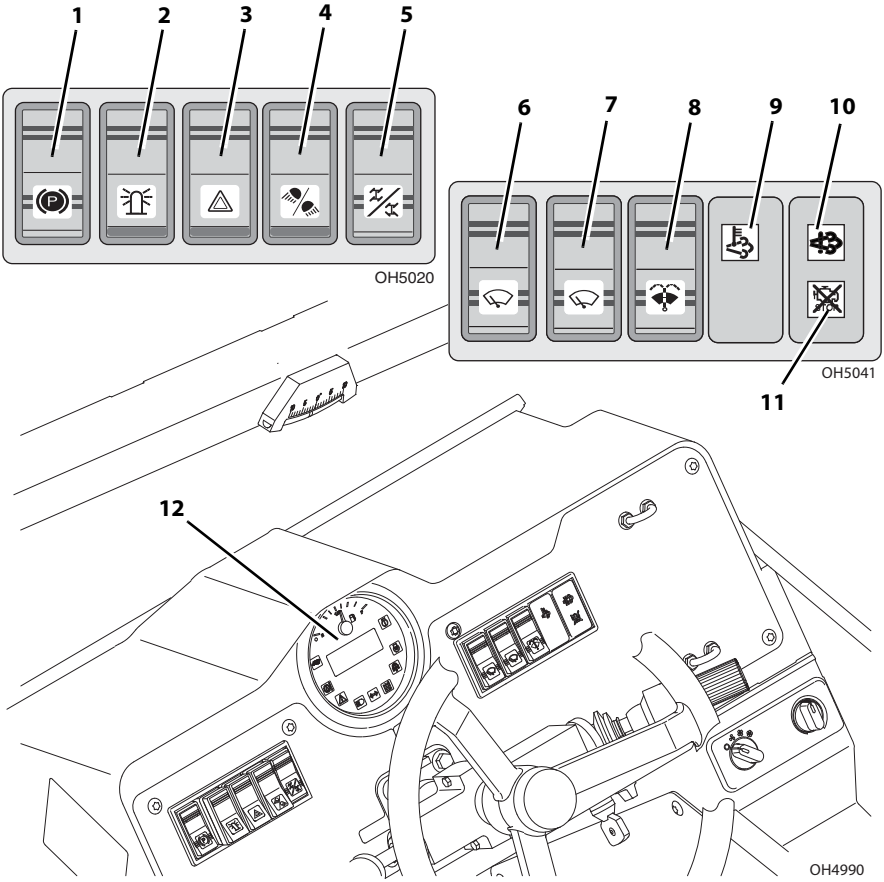

(IF EQUIPPED WITH HEATER)

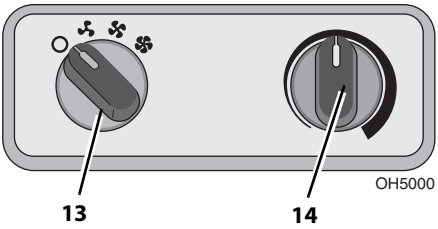

(IF EQUIPPED WITH HEATER & AC)

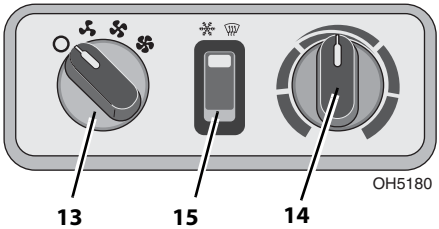

https://truckmanualshub.com/

1. ***Park Brake Switch:*** On/Off switch. See page 3-9 for details.
2. ***Beacon Light Switch (if equipped):*** On/Off switch.
3. ***Hazard Light Switch (if equipped):*** On/Off switch.
4. ***Work Light Switch (if equipped):*** Three position switch. Push bottom of switch to turn all work lights on. Move switch to middle position to turn on front and boom worklights. Push top of switch to turn off all work lights.
5. ***Steer Select Switch:*** Three positions: 4-wheel circle steer, 4-wheel crab steer and 2-wheel front steer. See page 3-17 for details.
6. ***Windshield Wiper Switch (if equipped):*** Three position switch. Push bottom of switch to operate wiper at high speed. Move switch to middle position to operate wiper at low speed. Push top of switch to turn off wiper.
7. ***Skylight Wiper Switch (if equipped):*** Three position switch. Push bottom of switch to operate wiper at high speed. Move switch to middle position to operate wiper at low speed. Push top of switch to turn off wiper.
8. ***Windshield and Skylight Washer Switch (if equipped):*** Push and hold bottom of switch to activate washer.
9. ***High Exhaust System Temperature Indicator (HEST) (if equipped for ULS/85 or 110HP):*** May illuminate during exhaust system cleaning. See page 4-4 for details.
10. ***Selective Catalytic Reduction (SCR) Indicator (if equipped for ULS/85 or 110HP):*** Illuminates when stationary cleaning is required. Flashes during cleaning process. See page 4-4 for details.
11. ***Do Not Turn Off Engine Indicator (if equipped for ULS/85 or 110HP):*** Illuminates when stationary cleaning required. See page 4-4 for details.
12. ***Instrument Cluster:*** See page 3-6 for details.

Heater and Air Conditioning Controls (if equipped)

13. ***HVAC Fan Speed (if equipped):*** Adjustable rotary switch.
14. ***HVAC Temperature Control Switch (if equipped):*** Adjustable rotary switch.
15. ***Air Conditioning (AC) Switch (if equipped):*** Two-position switch.

https://truckmanualshub.com/

Instrument Cluster

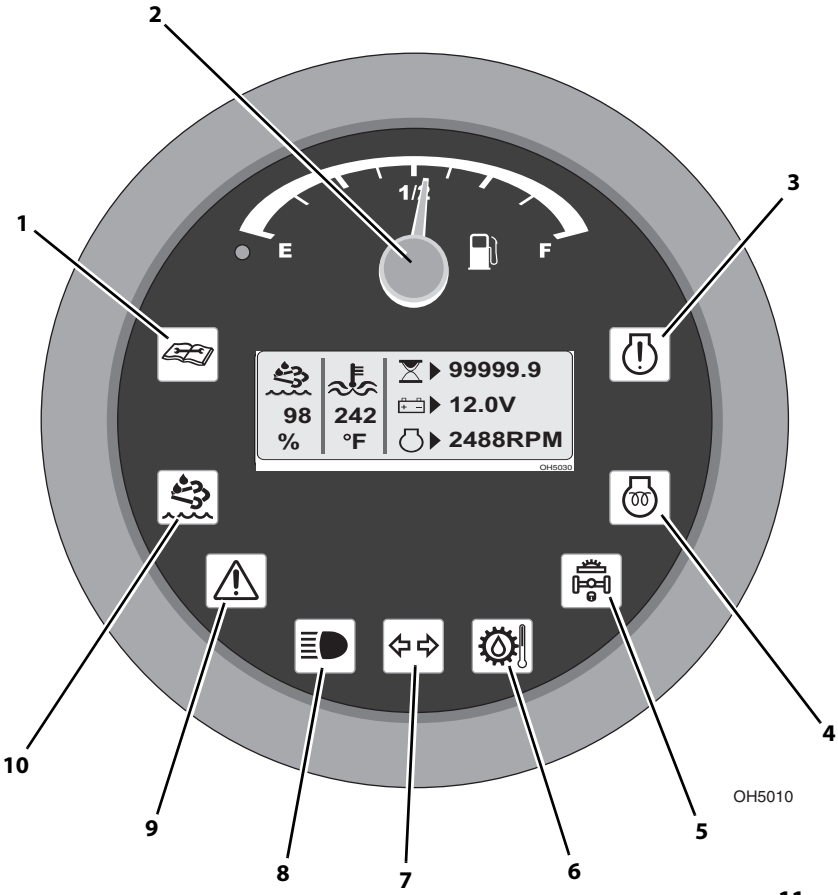

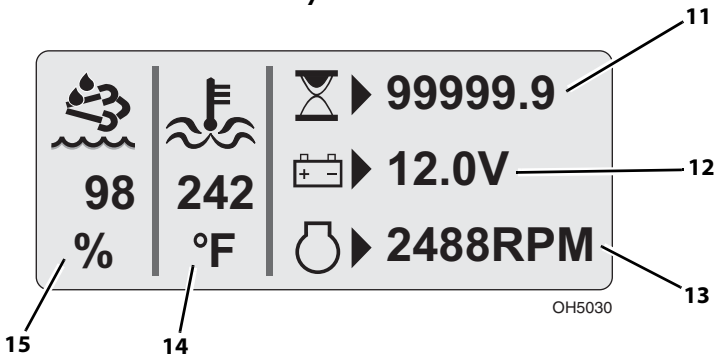

https://truckmanualshub.com/

1. ***Maintenance Indicator:*** Flashes when fault code present. Illuminates when maintenance is required. See Service Manual for details.
2. ***Fuel Gauge:*** Indicates fuel level.
3. ***Engine Warning Indicator:*** Illuminates when the engine is a critical state. Immediately bring machine to a stop, retract and lower boom and stop the engine. Determine cause and correct before continued use.
4. ***Engine Pre-Heat Indicator:*** Illuminates with ignition key in position 1. Indicator goes out when start temperature is reached.
   (If equipped for **ULS**) Pre-heat indicator will flash and fault code will appear on instrument cluster display during starter lockout. Return ignition switch to position 1 for a minimum of two minutes to allow system to reset before trying to start again.
5. ***Stabil-Trak Indicator (6042, 8042, 10042 & 10054):*** Illuminates when Stabil-Trak system has been activated. See page 3-18.
6. ***Transmission Temperature Indicator:*** Illuminates when transmission oil temperature is high. Stop and idle engine with transmission in neutral, allowing time for cooling. If light remains on, shut-down engine.
7. ***Turn Signal Indicator (if equipped):*** Illuminates and flashes while turn signals or hazard lights are activated.
8. ***High Beam Indicator (if equipped):*** Illuminates while high beam lights are activated.
9. ***System Distress Indicator:*** Illuminates when an issue with the fuel level or machine system is present.
10. ***Diesel Exhaust Fluid (DEF) Low Indicator (if equipped for ULS/85 or 110HP):*** Illuminates when DEF volume is low. Also may illuminate if DEF quality is poor or if DEF system tampering or malfunction occurs.
    (SN 0160082087 to Present) If DEF tank assembly is still under warranty, contact Cummins prior to servicing.
11. ***Operating Hours and Fault Codes:***
    a. Operating Hours—Displays total hours of telehandler operation.
    b. Fault Codes—Replaces operating hours. Displays fault codes of engine and machine systems. See Service manual.
12. ***Battery Voltage and Operating Hours:***
    a. Battery Voltage—Displays voltage supplied by battery.
    b. Operating Hours—Alternates with battery voltage if fault code present.
13. ***Engine Speed:*** Displays engine speed in revolutions per minute (rpm).
14. ***Engine Coolant Temperature:*** Displays engine coolant temperature.
15. ***Diesel Exhaust Fluid (DEF) Level (if equipped for ULS/85 or 110HP):*** Displays fluid level.

https://truckmanualshub.com/

Ignition

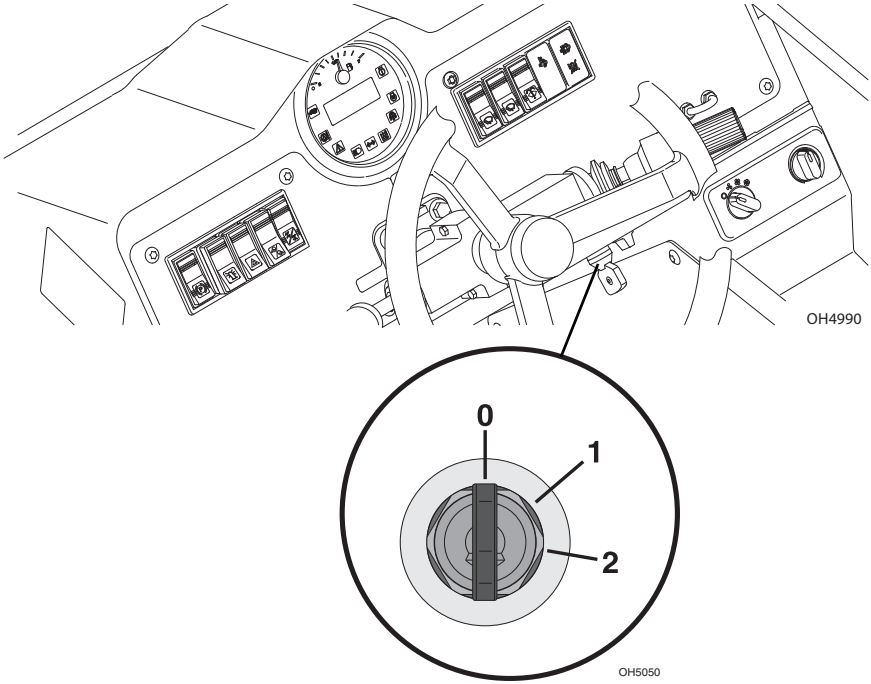

- Position **0**: Engine off, no voltage available.
- Position **1**: Voltage available for all electrical functions. Wait to start engine until engine pre-heat indicator goes out.
- Position **1**: Engine run.
- Position **2**: Engine start. In event engine does not start, rotate key to position 0 then back to position 2 to re-engage starter.

https://truckmanualshub.com/

Park Brake

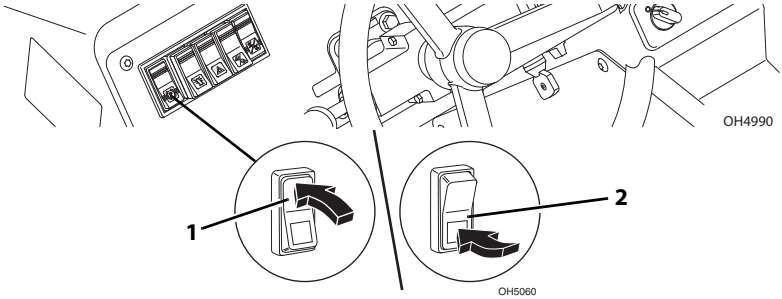

Park brake switch controls application and release of park brake. Indicator on switch illuminates to indicate brake is applied.

- With engine running and the park brake switch in "OFF" position (**1**), park brakes are disengaged.
- With switch in "ON" position (**2**), park brake is engaged and transmission will not engage forward or reverse.
- (6042, 8042, 10042 & 10054 Only) With switch in “ON” position and boom angles greater than 40°, locked mode of Stabil-Trak system is activated. See page 3-18.

WARNING

MACHINE ROLL-AWAY HAZARD. In the event of engine failure, apply constant pressure to service brake pedal while activating the park brake to the ON position.

WARNING

MACHINE ROLL-AWAY HAZARD. Always move park brake switch to ON position, lower boom to ground and stop engine before leaving cab.

WARNING

CRUSH HAZARD. Turning engine off applies the park brake. Applying park brake or turning engine off while traveling will cause unit to stop abruptly and could cause load loss. Either may be used in an emergency situation.

Parking Procedure

1. Using service brake, stop telehandler in an appropriate parking area.
2. Follow *“Shut-Down Procedure”* on page 4-3.

https://truckmanualshub.com/

Transmission Control Lever

Direction of Travel Selection

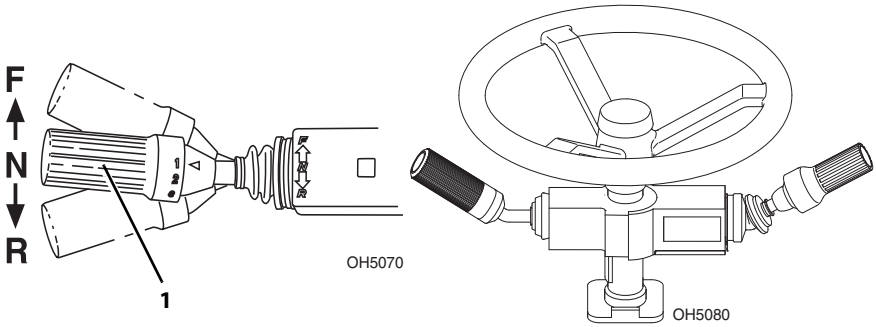

Transmission control lever (**1**) engages forward or reverse travel.

- Lift and push lever forward for forward travel; lift and pull lever rearward for reverse travel. Move lever to centered position for neutral.
- Forward or reverse travel can be selected while in any gear.
- When traveling in reverse, back-up alarm will automatically sound.
- Drive in reverse and turn only at slow rates of speed.
- Do not increase engine speed with transmission in forward or reverse and service brake depressed in an attempt to get quicker hydraulic performances. This could cause unexpected machine movement.
- (6042, 8042, 10042 & 10054 Only) With lever in neutral and boom angles greater than 40°, locked mode of Stabil-Trak system is activated. See page 3-18.

WARNING

TIP OVER/CRUSH HAZARD. Bring telehandler to a complete stop before shifting transmission control lever. A sudden change in direction of travel could reduce stability and/or cause load to shift or fall.

https://truckmanualshub.com/

Gear Selection

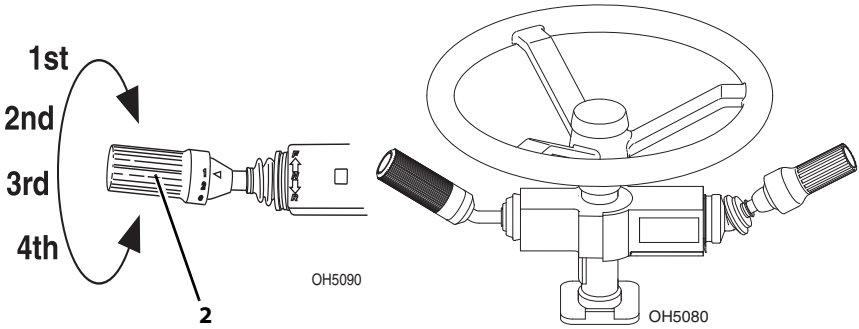

Gear selection is located on the twist grip handle (**2**) of transmission control lever.

- Twist hand grip to select gear.
- Select appropriate gear for task being performed. **Use a lower gear when transporting a load**. Use a higher gear only when driving unloaded for longer distances.
- Slow down prior to downshifting. **Do not downshift more than one gear at a time.**

https://truckmanualshub.com/

Boom Joystick

WARNING

TIP OVER/CRUSH HAZARD. Rapid, jerky operation of controls will cause rapid, jerky movement of the load. Such movements could cause the load to shift or fall or could cause the machine to tip over.

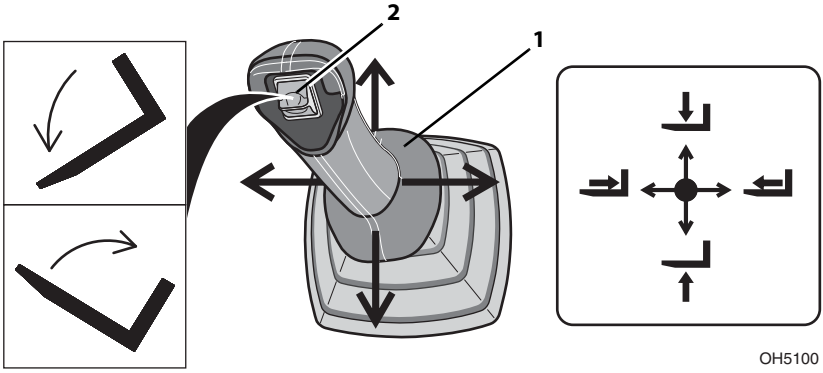

Boom Joystick (**1**) controls boom and attachment tilt functions.

Boom Functions

- Move joystick back to lift boom; move joystick forward to lower boom; move joystick right to extend boom; move joystick left to retract boom.
- Speed of boom functions depends upon amount of joystick travel in corresponding direction. Increasing engine speed will also increase function speed.
- For two simultaneous boom functions, move joystick between quadrants. Example: moving joystick forward and to left will lower and retract boom simultaneously.

Attachment Tilt Functions

Attachment tilt is controlled by roller switch (**2**).

- Push roller switch up to tilt attachment down; push roller switch down to tilt attachment up.

https://truckmanualshub.com/

Auxiliary Hydraulic Joystick

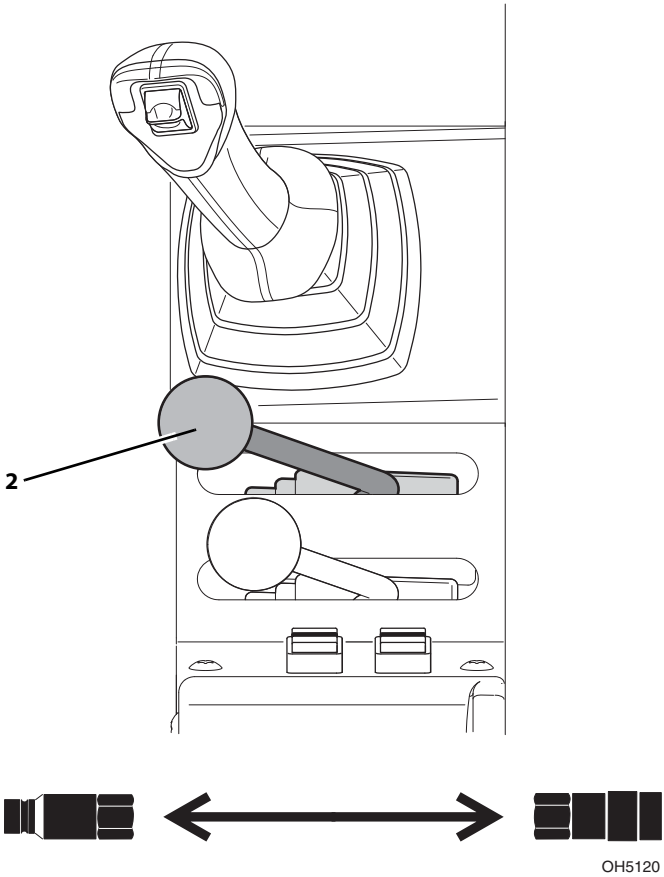

Auxiliary hydraulic joystick (**2**) controls function of attachments that require hydraulic supply for operation. See Section 5- Attachments for approved attachments and control instructions.

https://truckmanualshub.com/

Frame Level Joystick

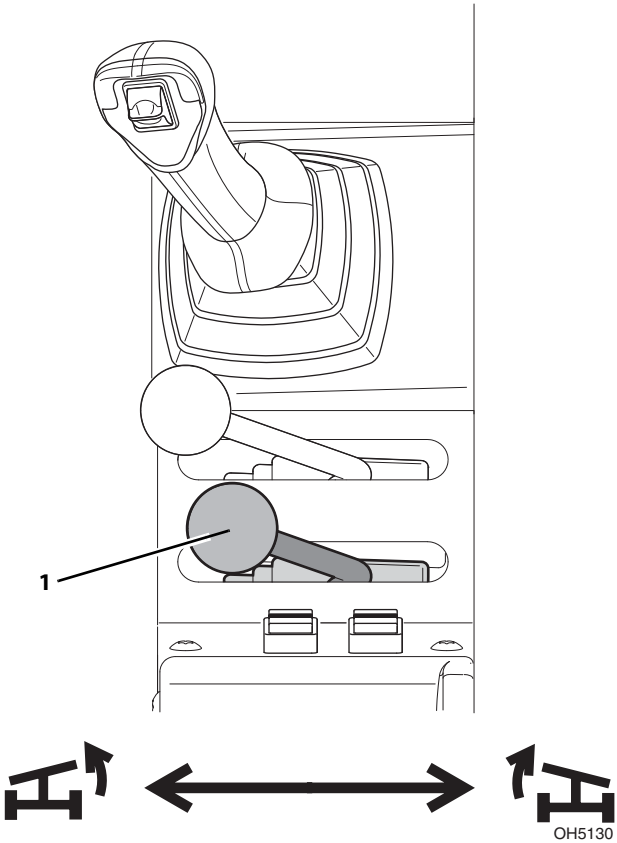

Frame level joystick (**1**) controls left to right frame level.

- Move joystick left to rotate frame left, move joystick right to rotate frame right.
- A level indicator is located above front cab window to permit operator to determine whether telehandler frame is level.

WARNING

TIP OVER HAZARD. Always move boom as low as possible while allowing for best visibility of right hand mirror before leveling frame. Attempting to level machine with boom raised could cause it to tip over.

https://truckmanualshub.com/

Outrigger Switches (10042 & 10054)

Outrigger switches control outriggers.

- Left switch controls left outrigger and right switch controls right outrigger.
- Push bottom of switches (**1**) to lower outriggers; push top of switches (**2**) to raise outriggers.
- Use the outriggers to increase stability and/or load capacity and in leveling telehandler. Study capacity charts to determine maximum load capacities, with and without outriggers.

WARNING

TIP OVER HAZARD. Outriggers increase stability and load capacity only if they are used properly. Using outriggers on soft surfaces could cause telehandler to tip over. Always ensure surface can support telehandler and load.

https://truckmanualshub.com/

Accessory Control Lever (if equipped)

Accessory control lever (**3**) operates turn signals, parking lights and headlights.

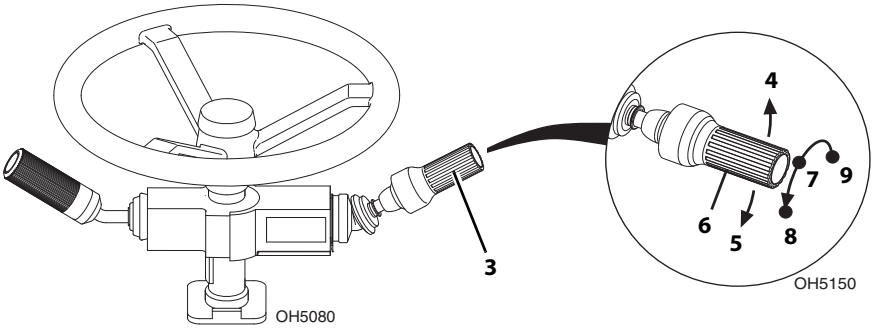

Turn Signal

- Raise lever (**4**) to activate left turn signal.
- Lower lever (**5**) to activate right turn signal.
- Lever must be manually returned to center position to deactivate either turn signal. Lever will not cancel automatically after a turn.

Parking Lights and Headlights

- Turn twist grip (**6**) of lever counterclockwise to first position (**7**) to turn on parking lights.
- Turn twist grip to second position (**8**) to turn on headlights.
- Pull lever to switch between low and high beam.
- Turn twist grip clockwise to OFF position (**9**) to turn all lights off.

https://truckmanualshub.com/

3.3 STEER MODES

Three steer modes are available for operator use.

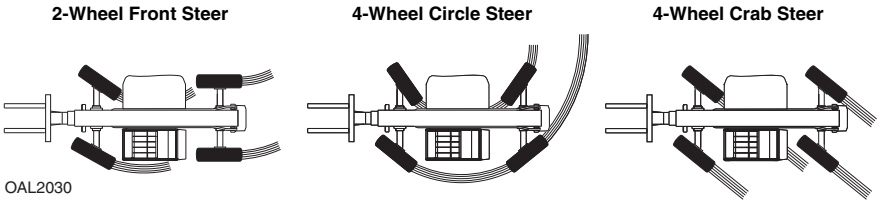

Note: *2-Wheel Front Steer mode is required for travel on public roads.*

Steer Mode Change

Note: *Steer mode will change immediately after selection.*

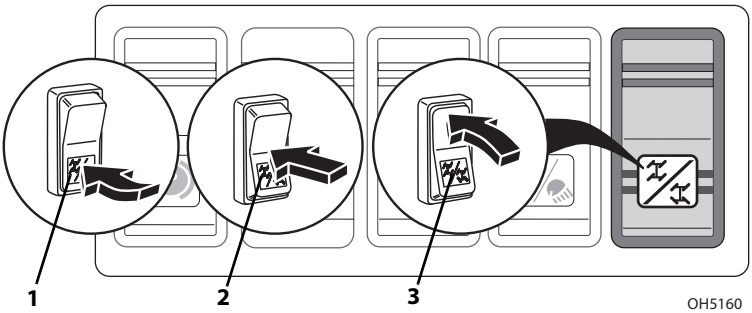

1. Bring machine to a stop using service brake while either circle steer mode (**1**) or crab steer mode (**3**) is selected.

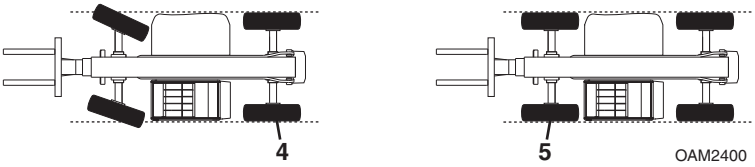

2. Turn steering wheel until left rear wheel (**4**) is aligned with side of machine.
3. Select front steer mode (**2**).
4. Turn steering wheel until left front wheel (**5**) is aligned with side of machine.
5. Wheels are now aligned. Select desired steer mode.

https://truckmanualshub.com/

3.4 STABIL-TRAK™ SYSTEM (6042, 8042, 10042 & 10054)

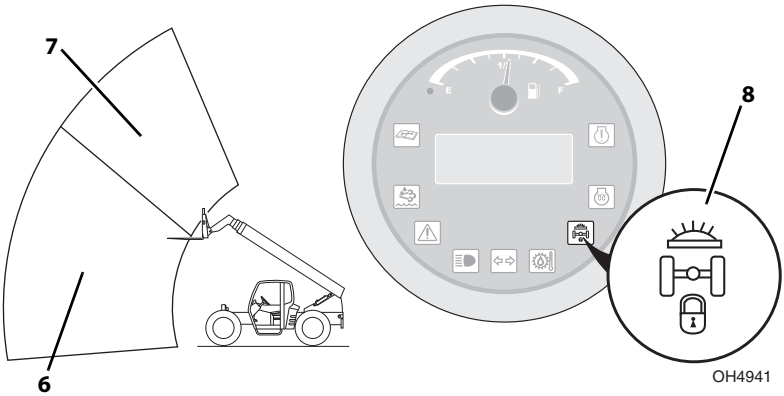

Free Pivot Mode

With boom below 40° (**6**), Stabil-Trak system is in Free Pivot Mode. Rear axle pivots freely and frame level functions normally. Stabil-Trak indicator (**8**) will be off.

Slow Pivot Mode

With boom above 40° (**7**), the Stabil-Trak system is in Slow Pivot Mode when service brake is not applied and transmission is in gear. Rear axle will respond slowly to changes in terrain and frame level functions normally. Stabil-Trak indicator (**8**) will be off.

Locked Mode

With boom above 40° (**7**), and activating one or more of following functions, Stabil-Trak system is in Locked Mode.

- Park brake switch engaged.
- Transmission control lever in Neutral.
- Service brake pedal depressed.

Rear axle is locked and frame level functions slower than normal. Stabil-Trak indicator (**8**) will illuminate.

https://truckmanualshub.com/

3.5 BOOM/OUTRIGGER INTERLOCK SYSTEM (10054)

Boom/outrigger interlock system allows boom to be extended to its maximum limits.

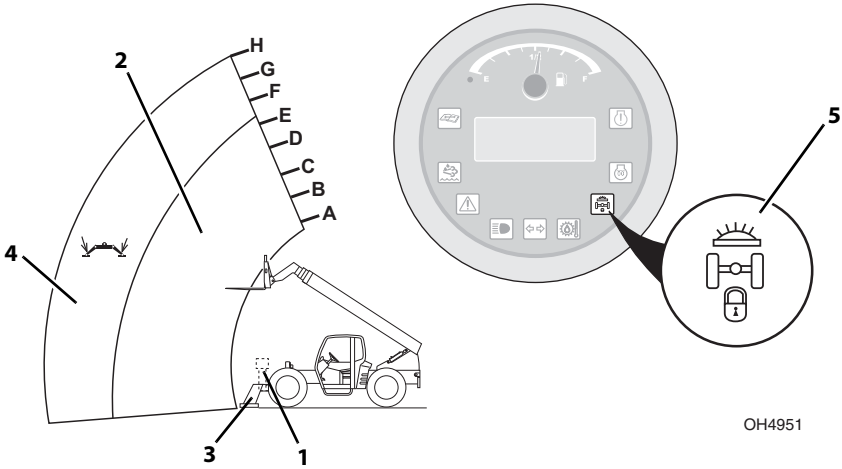

Extend Interlock Mode

With outriggers raised (**1**), telehandler is in extend interlock mode which limits boom extension (**2**).

- Boom is limited from extending beyond a point between the “E” and “F” boom extension indicators.
- Vehicle and Stabil-Trak will function normally.

Outrigger Interlock Mode

With outriggers lowered (**3**) on firm terrain, telehandler is in outrigger interlock mode which allows for full boom extension (**4**).

When outriggers are lowered, shift travel select lever into neutral and engage parking brake.

With outrigger interlock engaged, additional systems are automatically activated.

- Stabil-Trak is in locked mode and indicator (**5**) will illuminate.
- Frame level will be slower than normal.
- Outriggers can be lowered to adjust for any changes in outrigger footing.

Boom must be retracted within extension limit (**2**) for any of these conditions to change.

https://truckmanualshub.com/

3.6 OPERATOR SEAT

Adjustments

Prior to starting engine adjust seat for position and comfort.

Prior to SN 0160074878

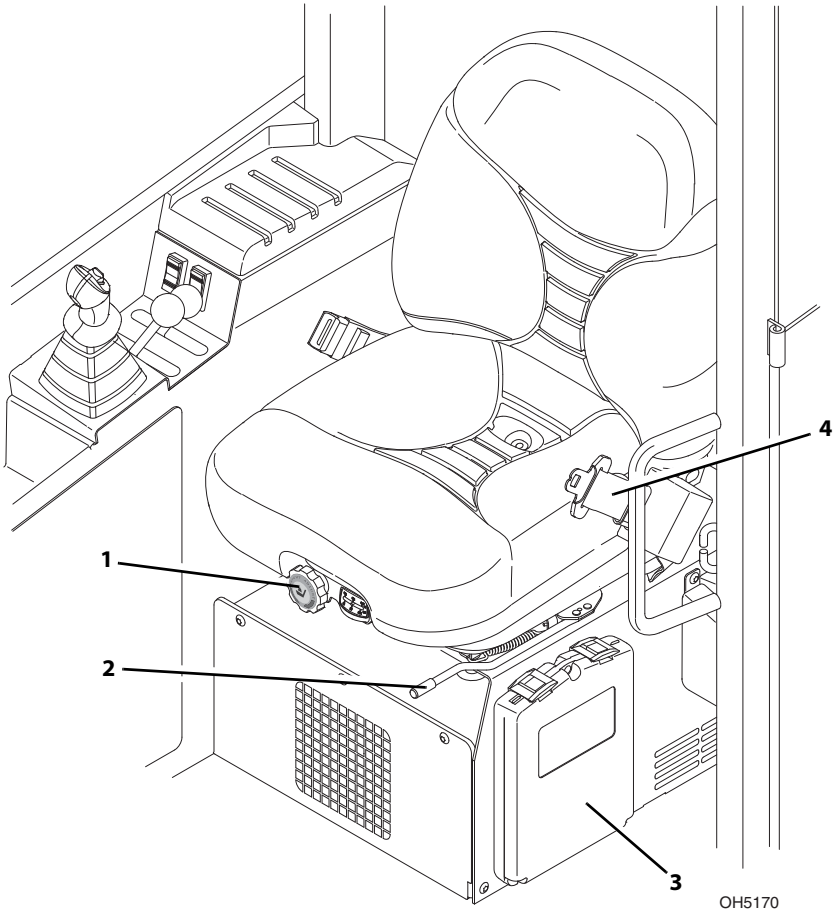

1. ***Suspension:*** Use knob to adjust suspension to the appropriate setting. Turn clockwise to increase stiffness. Turn counterclockwise to reduce stiffness.
2. ***Fore/Aft:*** Pull up on handle to move seat fore and aft.
3. ***Document Case:*** Contains unit materials.
4. ***Seat Belt:*** Always fasten seat belt during operation. If required, a 3 in (76 mm) seat belt is available.

https://truckmanualshub.com/

SN 0160074878 to Present

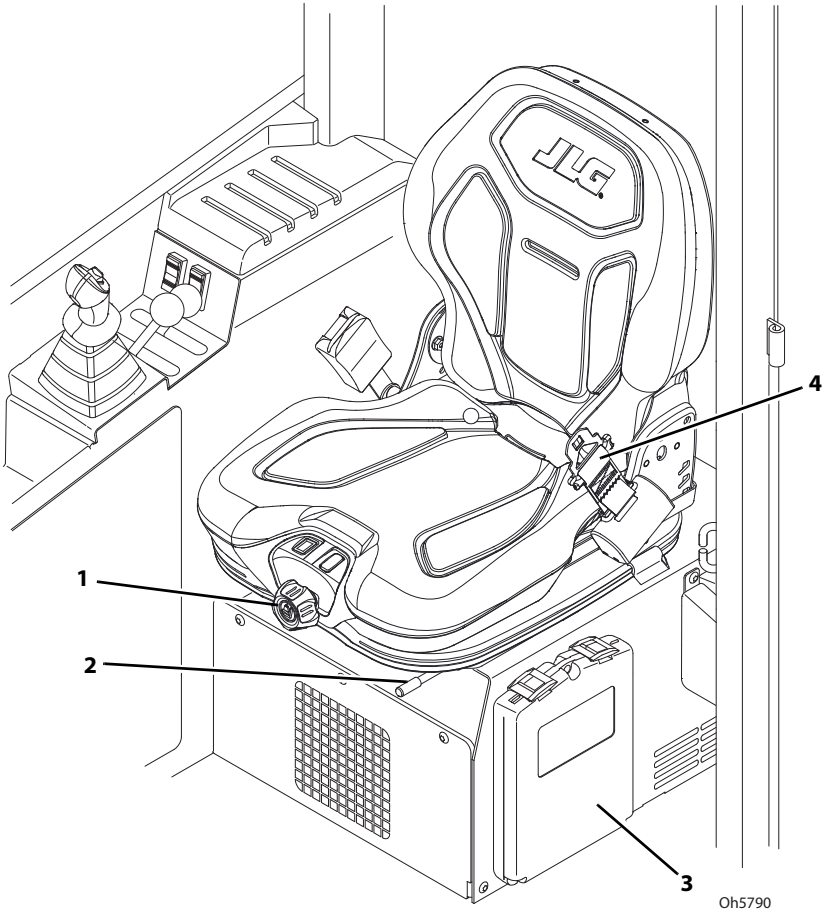

1. ***Suspension:*** Use knob to adjust suspension to the appropriate setting. Turn clockwise to increase stiffness. Turn counterclockwise to reduce stiffness.
2. ***Fore/Aft:*** Pull up on handle to move seat fore and aft.
3. ***Document Case:*** Contains unit materials.
4. ***Seat Belt:*** Always fasten seat belt during operation. If required, a 3 in (76 mm) seat belt is available.

https://truckmanualshub.com/

Seat Belt

Fasten seat belt as follows:

1. Grasp both free ends of the belt making certain that belt webbing is not twisted or entangled.
2. With back straight in seat, couple retractable end (male end) of belt into receptacle (buckle) end of belt.
3. With belt buckle positioned as low on body as possible, pull retractable end of belt away from buckle until it is tight across lap.
4. To release belt latch, depress red button on buckle and pull free end from buckle.

https://truckmanualshub.com/

3.7 BOOM ANGLE AND EXTENSION INDICATORS

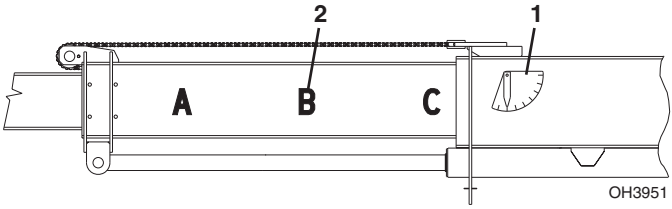

- Boom angle indicator (**1**) is located on left side of boom. Use this indicator to determine boom angle when using capacity chart (see *"Use of the Capacity Chart"* on page 5-5).
- Boom extension indicators (**2**) are located on left side of boom. Use these indicators to determine boom extension when using capacity chart (see *"Use of the Capacity Chart"* on page 5-5).

https://truckmanualshub.com/

3.8 REVERSE SENSING SYSTEM (IF EQUIPPED)

WARNING

CRUSH HAZARD. Running into persons or objects can cause death, serious injury, or damage to property and equipment. Always check mirrors and area behind machine before and when backing up. Reverse systems are for supplementary use only.

Reverse Sensing System provides audible indication of objects to rear of machine while in reverse gear.

- Alarm sounds when transmission is shifted into reverse.

Note: *Reverse Sensing System detects objects larger than 36 square inches (232.25 square centimeters) area and is functional when machine is moving in reverse direction.*

- No alarm when detection zone is clear of objects.
- Pulsing alarm sounds when an object is in range of Reverse Sensing System. Alarm increases in frequency as object becomes closer.
- If alarm sounds at a frequency of eight pulses per second (8 Hz) an object is detected within 5 feet (1.5 m). Stop reverse direction of machine by applying service brake. Perform *"Shut-Down Procedure"* on page 4-3. Check and clear area behind machine of objects before proceeding in a reverse direction.

https://truckmanualshub.com/

SECTION 4 - OPERATION

4.1 ENGINE

Starting the Engine

This machine can be operated under normal conditions in temperatures of 0°F to 104°F (-20°C to 40°C). Consult JLG for operation outside this range or under abnormal conditions.

1. Make sure all controls are in “Neutral” and all electrical components (lights, heater, defroster, etc.) are turned off. Apply park brake.
2. Turn the ignition switch to position 1 and wait until engine pre-heat indicator light goes out.
3. Turn ignition switch to position 2 to engage starting motor. Release key immediately when engine starts. If engine fails to start within 20 seconds, release key and allow starting motor to cool for two minutes before trying again.

Note: *(If equipped for **ULS**) Engine is equipped with starter lockout feature and may prevent starter engagement under certain conditions. Pre-heat indicator will flash and fault code will appear on instrument cluster display. Return ignition switch to position 1 for a minimum of two minutes to allow system to reset before trying to start again.*

4. After engine starts, observe instrument cluster. If a red indicator remains on for more than five seconds, stop engine and determine cause before restarting engine.

Note: *Battery voltage may read low, and engine speed may fluctuate for a short time after start up when the machine is cold.*

5. Warm up engine at approximately 1/2 throttle.

Note: *Engine will not start unless transmission is in neutral and park brake is applied.*

WARNING

ENGINE EXPLOSION. Do not use ether for cold weather starting.

WARNING

UNEXPECTED MOVEMENT HAZARD. Always ensure that transmission is in neutral and the service brake is applied before releasing park brake. Releasing park brake in either forward or reverse could cause the machine to move abruptly.

https://truckmanualshub.com/

Battery Boosted Starting

If battery-boost starting (jump-start) is necessary, proceed as follows:

- Never allow vehicles to touch.
- Ensure boosting vehicle engine is running.
- Connect positive (+) jumper cable to positive (+) post of discharged battery.
- Connect opposite end of positive (+) jumper cable to positive (+) post of booster battery.
- Connect the negative (-) jumper cable to negative (-) post on booster battery.
- Connect opposite end of negative (-) jumper cable to ground point on machine away from discharged battery.
- Follow standard starting procedures.
- Remove cables in reverse order after machine has started.

WARNING

BATTERY EXPLOSION HAZARD. Never jump start or charge a frozen battery as it could explode. Keep sparks, flames and lighted smoking materials away from the battery. Lead acid batteries generate explosive gases when charging. Wear safety glasses.

https://truckmanualshub.com/

Normal Engine Operation

- Observe gauges and indicators frequently to be sure all systems are functioning properly.
- **Be alert for unusual noises or vibration.** When an unusual condition is noticed, park machine in safe position and perform shut-down procedure. Report condition to your supervisor or maintenance personnel.
- **Avoid prolonged idling.** If engine is not being used, turn it off.
- If prolonged idling is required (park brake applied), engine idle may increase if ambient temperature goes below -1°F (-17°C).
- When operating a machine at high altitudes, a decrease in machine performance may occur due to a decrease in air density. When operating a machine at high temperatures, a decrease in machine performance and an increase in engine coolant temperature may occur. Contact JLG for operation under abnormal conditions.

Shut-Down Procedure

When parking the telehandler, park in a safe location on flat level ground and away from other equipment and/or traffic lanes.

1. Apply the park brake.
2. Shift the transmission to “Neutral.”
3. Lower forks or attachment to the ground.
4. Operate engine at low idle for 3 to 5 minutes. **DO NOT over rev engine.**
5. Shut off engine and remove ignition key.
6. Exit telehandler properly.
7. Block wheels (if necessary).

https://truckmanualshub.com/

4.2 AFTER-TREATMENT SYSTEM (ATS) (IF EQUIPPED FOR ULS/85 OR 110HP)

This machine is equipped with an exhaust After-Treatment System.

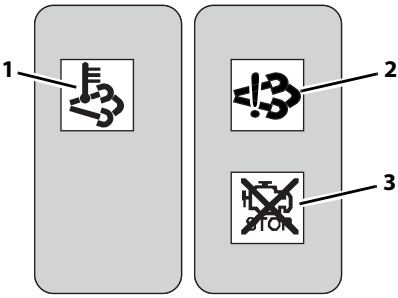

OH5610

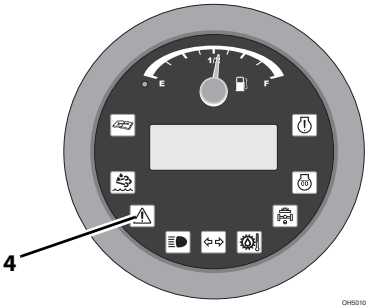

OH5010

Automatic Exhaust System Cleaning

ATS is an automatic exhaust cleaning system and will perform as required without any operator interaction.

- High Exhaust System Temperature (HEST) (**1**) Indicator may illuminate during exhaust system cleaning.

WARNING

HIGH EXHAUST TEMPERATURE. Keep flammables and people away from hot exhaust.

https://truckmanualshub.com/

Stationary Exhaust System Cleaning

Selective Catalytic Reduction (SCR) Indicator (**2**) will illuminate when stationary exhaust system cleaning is required.

1. Move telehandler to an area free of flammables and people that could be exposed to hot exhaust.
2. Shift transmission to neutral, retract and lower boom and engage park brake.
3. When exhaust system cleaning begins, the HEST (**1**) and Do Not Turn Off Engine (**3**) indicators will illuminate. Do not turn off engine.
4. Do not press accelerator pedal or other controls during exhaust system cleaning.
5. SCR indicator (**2**) flashes during cleaning. Stationary exhaust system cleaning takes approximately 30 to 60 minutes.

   Note: *Stationary exhaust system cleaning will stop and may be incomplete if any controls are inadvertently moved or activated. If stationary exhaust cleaning is interrupted, HEST (**1**) and Do Not Turn Off Engine (**3**) indicators will turn off and SCR Indicator (**2**) will stop blinking and illuminate solid. To restart stationary exhaust system cleaning, depress service brake and disengage park brake. Return to step 1 and repeat process.*

6. Stationary exhaust system cleaning is complete after HEST, SCR and Do Not Turn Off Engine indicators go off.

NOTICE

EQUIPMENT DAMAGE. If exhaust system cleaning continually fails, SCR (**2**) and System Distress (**4**) indicators will illuminate. Immediately bring machine to a stop and perform stationary exhaust system cleaning. If exhaust system cleaning is not completed a torque derate is initiated. Contact the local dealer.

https://truckmanualshub.com/

4.3 OPERATING WITH A NON-SUSPENDED LOAD

Lift Load Safely

- You must know weight and load center of every load you lift. If you are not sure of the weight and load center, check with your supervisor or with the supplier of material.

WARNING

TIP OVER HAZARD. Exceeding lift capacity of the telehandler could damage the equipment and/or cause tip over.

- Know the rated load capacities (see Section 5) of the telehandler to determine the operating range in which you can safely lift, transport and place a load.

Picking Up a Load

- Note the conditions of the terrain. Adjust travel speed and reduce amount of load if conditions warrant.
- Avoid lifting double-tiered loads.
- Make sure load is clear of any adjacent obstacles.
- Adjust spacing of forks so they engage the pallet or load at maximum width. See *"Adjusting/Moving Forks"* on page 5-13.
- Approach load slowly and squarely with fork tips straight and level. **NEVER** attempt to lift a load with just one fork.
- **NEVER** operate telehandler without a proper and legible capacity chart in the operator cab for the telehandler/attachment combination you are using.

https://truckmanualshub.com/

Transporting a Load

After engaging the load and resting it against the backrest, tilt the load back to position it for travel. Travel in accordance with the requirements set forth in Section 1- General Safety Practices and Section 5- Attachments.

Leveling Procedure

1. Position machine in best location to lift or place load.
2. Apply parking brake and move transmission control lever to NEUTRAL.
3. Observe level indicator to determine whether machine must be leveled prior to lifting load. Level machine with frame level joystick (see page 3-13) or outrigger switches (10042 & 10054 only, see page 3-14).
4. Move boom/attachment to 4 ft (1,2 m) off ground.
   (AUS—Move boom so forks are no more than 11.8 in (300 mm) above ground surface.)

Important things to remember:

- Never raise the boom/attachment more than 4 ft (1,2 m) above ground unless telehandler is level.
  (AUS—Never raise the forks more than 11.8 in (300 mm) above ground surface unless telehandler is level.)
- The combination of frame leveling and load could cause the telehandler to tip over.

https://truckmanualshub.com/

Placing a Load

Before placing any load be sure that:

- The landing point can safely support the weight of the load.
- The landing point is level; front to back and side to side.
- Use the capacity chart to determine safe boom extension range. See *"Use of the Capacity Chart"* on page 5-5.
- Align forks at the level load is to be placed, then extend boom slowly until load is just above area where it is to be placed.
- Lower the boom until the load rests in position and the forks are free to retract.

Disengaging a Load

Once the load has been placed safely at the landing point, proceed as follows:

1. With the forks free from the weight of the load, the boom can be retracted and/or the telehandler can be backed away from under the load if surface will not change level condition of telehandler.
2. Lower the carriage.
3. The telehandler can now be driven from the landing location to continue work.

https://truckmanualshub.com/

4.4 OPERATING WITH A SUSPENDED LOAD

Lift Load Safely

- You must know the weight and load center of every load you lift. If you are not sure of weight and load center, check with your supervisor or with supplier of material.

WARNING

TIP OVER HAZARD. Exceeding lift capacity of the telehandler could damage the equipment and/or cause tip over.

- Know the rated load capacities (refer to Section 5) of the telehandler to determine operating range in which you can safely lift, transport and place a load.

Picking Up a Suspended Load

- Note the conditions of the terrain. Adjust travel speed and reduce amount of load if conditions warrant.
- Avoid lifting double-tiered loads.
- Make sure load is clear of any adjacent obstacles.
- **NEVER** operate telehandler without a proper and legible capacity chart in the operator cab for the telehandler/attachment combination you are using.
- Only use approved lifting devices rated for the lifting of the load.
- Identify the proper lifting points of the load, taking into consideration the center of gravity and load stability.
- Ensure to always properly tether loads to restrict movement.
- Refer to See *"Use of the Capacity Chart"* on page 5-5. for proper lifting guidelines in addition to the appropriate capacity chart in the operator cab.

https://truckmanualshub.com/

Transporting a Suspended Load

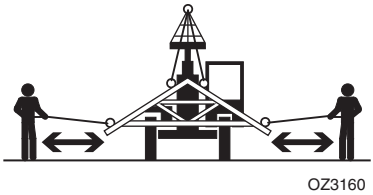

- Travel in accordance with the requirements set forth in Section 1- General Safety Practices and Section 5- Attachments.
- For additional requirements, refer to appropriate capacity chart in operator cab.

Important things to remember:

- Ensure the boom is fully retracted.
- Never raise the load more than 11.8 in (300 mm) above ground surface or the boom more than 45°.
- The combination of frame leveling and load could cause the telehandler to tip over.
- The guide persons and operator must remain in constant communication (verbal or hand) and be in visual contact with the operator at all times.
- Never place the guide persons between the suspended load and the telehandler.
- Only transport the load at walking speed, 0.9 mph (0.4 m/s), or less.

Leveling Procedure

1. Position machine in best location to lift or place load.
2. Apply parking brake and move transmission control lever to NEUTRAL.
3. Observe level indicator to determine whether machine must be leveled prior to lifting load. Level machine with frame level joystick (see page 3-13) or outrigger switches (10042 & 10054 only, see page 3-14).
4. Move boom so load is no more than 11.8 in (300 mm) above ground surface and boom/or boom is raised no more than 45°.

https://truckmanualshub.com/

Placing a Suspended Load

Before placing any load be sure that:

- The landing point can safely support the weight of the load.
- The landing point is level; front to back and side to side.
- Use the capacity chart to determine safe boom extension range. See *"Use of the Capacity Chart"* on page 5-5.
- Align load at the level load is to be placed, then position boom slowly until load is just above area where it is to be placed.
- Ensure that the guide persons and operator remain in constant communication (verbal or hand) when placing the load.

Disengaging a Suspended Load

- Never place the guide persons between the suspended load and the telehandler.
- Once at the destination of the load, ensure to bring the telehandler to a complete stop and apply the park brake prior to disengagement of the lifting devices and tethers.

https://truckmanualshub.com/

4.5 LOADING AND SECURING FOR TRANSPORT

Tie Down

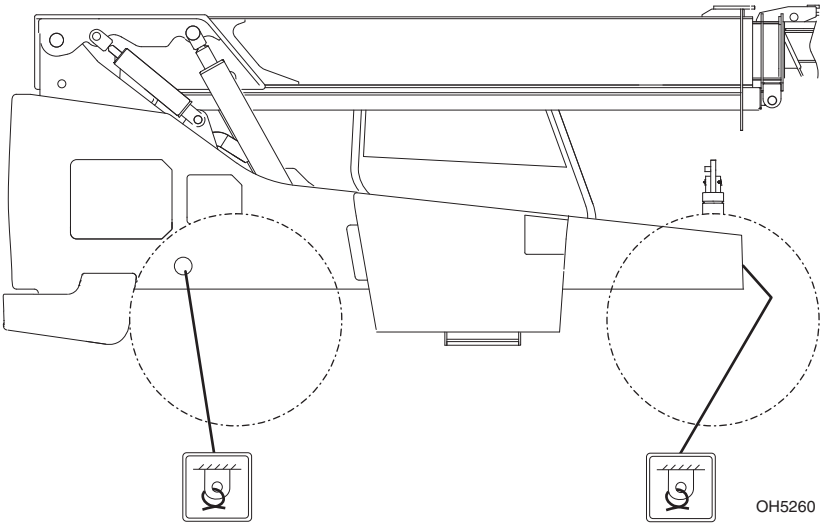

1. Level telehandler prior to loading.
2. Using a spotter, load telehandler with boom as low as possible.
3. Once loaded, apply parking brake and lower boom until boom or attachment is resting on deck. Move all controls to “Neutral,” stop engine and remove ignition key.
4. Secure machine to deck by passing chains through designated tie down points as shown in figure.
5. Do not tiedown front of boom.

Note: *The user assumes all responsibility for choosing the proper method of transportation and tie-down devices, making sure the equipment used is capable of supporting the weight of the vehicle being transported and that all manufacturer’s instructions and warnings, regulations and safety rules of their employer, the Department of Transportation and/or any other local, state or federal/provincial laws are followed.*

WARNING

TELEHANDLER SLIDE HAZARD. Before loading telehandler for transport, make sure deck, ramps and telehandler wheels are free of mud, snow and ice. Failure to do so could cause telehandler to slide.

https://truckmanualshub.com/

Lifting

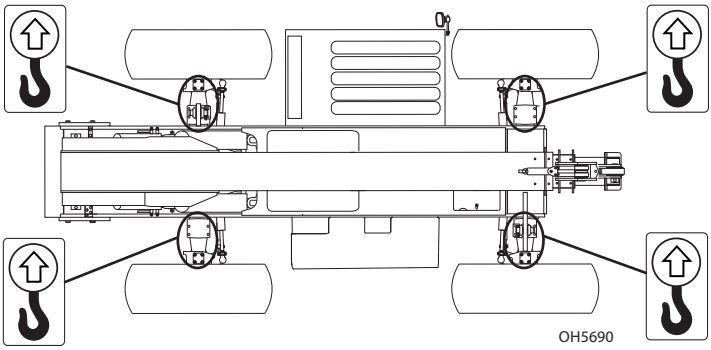

The weight of the machine is listed on the serial number plate located at the front of the frame. Actual machine weight and center of gravity will vary depending on attachment, fluid levels and machine options. Actual weight and center of gravity should be verified prior to lifting.

The following precautions must be taken when lifting the machine with a mobile crane:

- Make adjustments to the lifting device and equipment to ensure that the machine will be level when elevated. The machine must remain level at all times while being lifted.
- Machine must never be lifted by any point on the boom.
- Take care not to let cables, chains, slings, etc. contact any part of the vehicle during lift.
- The appropriate lifting locations are the axle beams, inboard of the kingpins. Take care as not to damage the axles and components.
- Ensure that the boom is retracted and lowered.
- Ensure that the lifting device and equipment is adequately rated and suitable for the intended purpose.
- Remove all loose items from machine prior to lifting of the machine.
- Lift at a slow, even pace.
- Obtain any additional training regarding the proper lifting procedures that may be required. Please consult the local, state, and employer regulations.

https://truckmanualshub.com/

This Page Intentionally Left Blank

https://truckmanualshub.com/

SECTION 5 - ATTACHMENTS

5.1 APPROVED ATTACHMENTS

To determine if an attachment is approved for use on specific telehandler you are using, perform following prior to installation.

- The machine is authorized for use with original equipment manufactured (OEM) supplied attachments or where explicit written authorization has been provided by the manufacturer.
- The model on the capacity chart must match the model telehandler being used.
- Hydraulically powered attachments must only be used on machines equipped with auxiliary hydraulics.
- Hydraulically powered attachments that require auxiliary electrics must only be used on machines equipped with auxiliary hydraulics and electrics.

If any of the above conditions are not met, do not use attachment. Telehandler may not be equipped with proper capacity chart or attachment may not be approved for the model telehandler being used. Contact JLG or a local distributor for further information.

5.2 UNAPPROVED ATTACHMENTS

Do not use unapproved attachments for the following reasons:

- Range and capacity limitations for “will fit,” homemade, altered, or other non-approved attachments cannot be established.
- An overextended or overloaded telehandler can tip over with little or no warning and cause serious injury or death to the operator and/or those working nearby.
- The ability of a non-approved attachment to perform its intended function safely cannot be assured.

WARNING

Use only approved attachments. Attachments which have not been approved for use with your telehandler could cause machine damage or an accident.

https://truckmanualshub.com/

5.3 JLG SUPPLIED ATTACHMENTS

Attachment	Part Number	Applicable Model				
		6036	6042	8042	10042	10054
Carriage, 50 in (1270 mm)	1001146084	X	X	X	X	X
	1170021	X	X	X	X	X
Carriage, 60 in (1524 mm)	1001146086	X	X	X	X	X
	1170024	X	X	X	X	X
Carriage, 72 in (1829 mm)	1001146088	X	X	X	X	X
	1001193794	X	X	X	X	X
	1001211516	X	X	X	X	X
Side Shift Carriage, 50 in (1270 mm)	1001142790	X	X	X	X	X
Side Tilt Carriage, 50 in (1270 mm)	1170054	X	X	X	X	X
Side Tilt Carriage, 60 in (1524 mm)	1001101956	X	X	X	X	X
Side Tilt Carriage, 72 in (1829 mm)	1170057	X	X	X	X	X
90° Swing Carriage, 72 in (1829 mm)	1001095418	X	X	X	X	X
Dual Fork Positioning Carriage, 50 in (1270 mm)	7301295	X	X	X	X	X
8 ft Mast Carriage, 50 in (1270 mm)	1001108668	X	X	X	X	X
Pipe Grapple	1001142247				X	X
Fork, Pallet 2.36x4x48 in (60x100x1220 mm)	2340045	X	X	X	X	X
Fork, Pallet 2.36x5x48 in (60x127x1220 mm)	2340038	X	X	X	X	X
Fork, Pallet 2.36x4x48 in (60x100x1220 mm)	7301408	X	X	X	X	X
Fork, Pallet 2.36x4x60 in (60x100x1524 mm)	1001227379	X	X	X	X	X
Fork, Dual Taper 1.75x7x60 in (44x178x1524 mm)	2340046	X	X	X	X	X
Fork, Dual Taper 2.36x6x60 in (60x152x1524 mm)	2340039	X	X	X	X	X
Fork, Dual Taper 2x6x72 in (50x152x1830 mm)	1001092391	X	X	X	X	X
Fork, Block 2x2x48 in (50x50x1220 mm)	2340037	X	X	X	X	X
Fork Extension, 90 in (2286 mm)	1001137512	X	X	X	X	X
Trash Hopper, Fork Mounted	1001195082	X	X	X	X	X
Bucket, Fork Mounted 60 in–1.3 yd^3	1001195970	X	X	X	X	X
Bucket, 72 in–1.0 yd^3	1001100822	X	X	X	X	X
Bucket, 96 in–1.5 yd^3	1001100823	X	X	X	X	X
Bucket, 102 in–2.0 yd^3	1001100824	X	X	X	X	X
Grapple Bucket, 96 in–1.75 yd^3	0930020	X	X	X	X	X
Hook, Fork Mounted	1001097205	X	X	X	X	X
Hook, Coupler Mounted	1001207606	X	X	X	X	X
Truss Boom w/ Winch, 3 ft (914 mm)	1001100967	X	X	X	X	X
Truss Boom, 12 ft (3658 mm)	1001099902	X	X	X	X	X
Truss Boom w/ Winch, 12 ft (3658 mm)	1001099351	X	X	X	X	X
Truss Boom, 15 ft (4572 mm)	1001099901	X	X	X	X	X
Material Handling Arm	1001176515	X	X	X	X	X

https://truckmanualshub.com/

Attachment	Part Number	Applicable Model				
		6036	6042	8042	10042	10054
Platform, Fork Mounted (ASME)	1001103637	X	X	X	X	X
Platform, Fork Mounted (ASME - French)	1001103736	X	X	X	X	X
Platform, Fork Mounted (ISO)	1001103730	X	X	X	X	X
Sweeper	1001202904	X	X	X	X	X
Sheet Handler	1001100227	X	X	X	X	X

https://truckmanualshub.com/

5.4 TELEHANDLER/ATTACHMENT/FORK CAPACITY

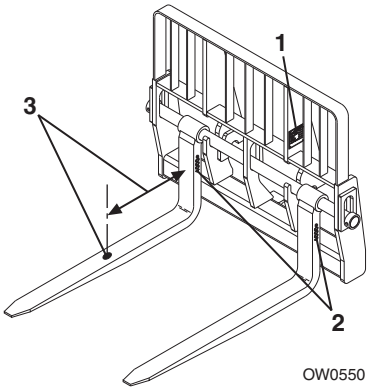

Prior to installing attachment, verify it is approved and telehandler is equipped with proper capacity chart. See *"Approved Attachments"* on page 5-1.

To determine maximum capacity of telehandler and attachment, use the **smallest** of the following capacities:

- Capacity stamped on attachment identification plate (**1**).
- Fork capacities and load centers are stamped on the side of each fork (**2**) (if equipped). This rating specifies maximum load capacity that the individual fork can safely carry at maximum load center (**3**). Total attachment capacity is multiplied by number of forks on attachment (if equipped), up to maximum capacity of attachment.
- Maximum capacity as indicated on the proper capacity chart. See *"Approved Attachments"* on page 5-1.
- When load rating of telehandler differs from capacity of the forks or attachment, the lower value becomes the overall load capacity.

Use the proper capacity chart to determine maximum capacity at various machine configurations. Lifting and placing a load may require use of more than one capacity chart based on machine configuration.

Other than block forks, all forks should be used in matched pairs, block forks used in matched sets.

⚠ WARNING

Never use an attachment without the appropriate JLG approved capacity chart installed on the telehandler.

https://truckmanualshub.com/

5.5 USE OF THE CAPACITY CHART

To properly use capacity chart (see page 5-6), operator must first determine and/or have the following:

1. An approved attachment. See *"Approved Attachments"* on page 5-1.
2. Proper Capacity Chart(s).
3. Weight of load being lifted.
4. Load placement information:
   a. HEIGHT where load is to be placed.
   b. DISTANCE from front tires of telehandler where load is to be placed.
5. On capacity chart, find the line for height and follow it over to distance.
6. Number in load zone where the two cross is the maximum capacity for this lift. If the two cross at a division between zones, the smaller number must be used.

The number in load zone must be equal to or greater than weight of load to be lifted. Determine limits of load zone on capacity chart and keep within these limits.

Capacity Indicator Locations

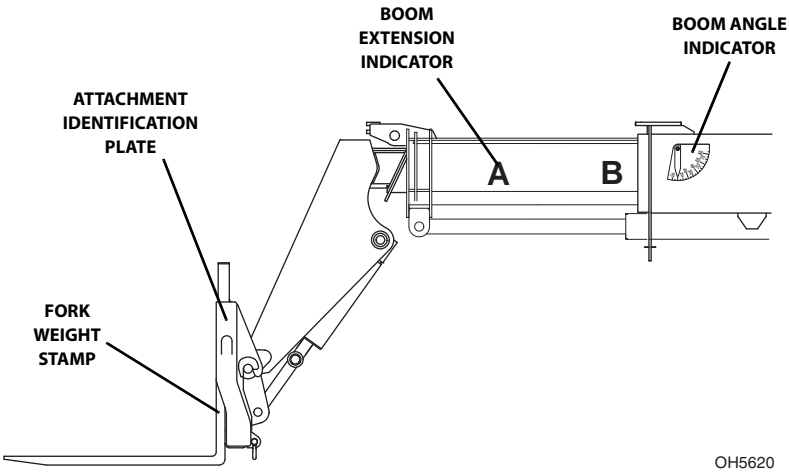

https://truckmanualshub.com/

Sample Capacity Chart

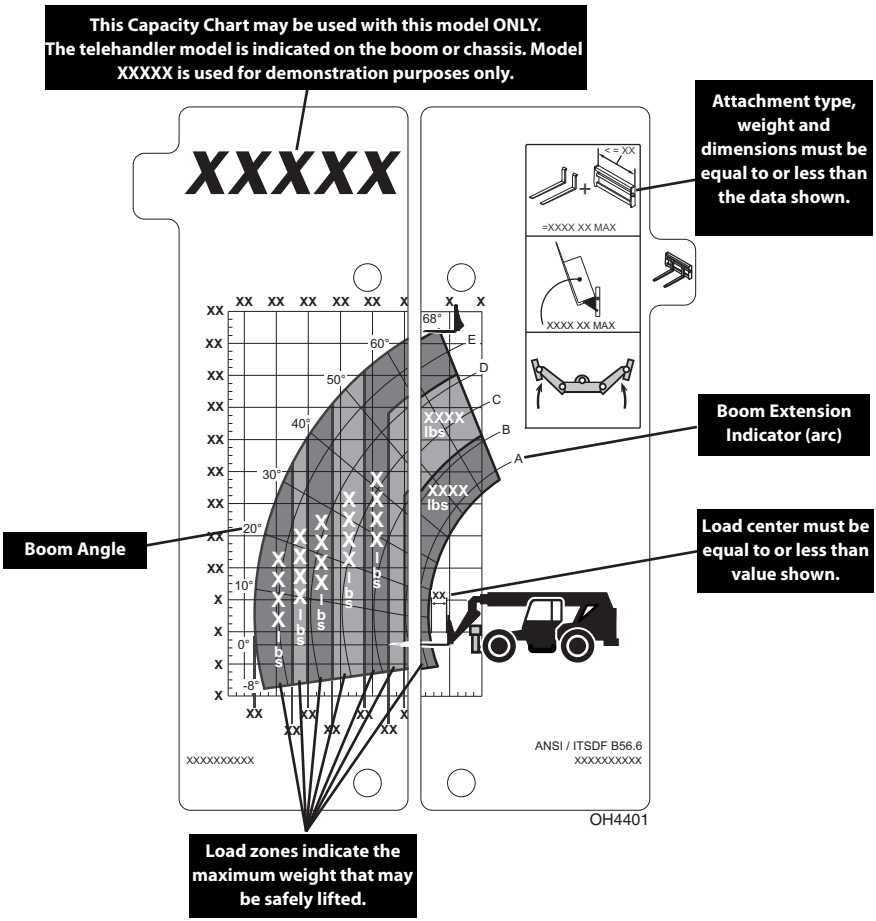

Note: *This is a sample capacity chart* ***only****!* ***DO NOT*** *use this chart, use the one located in your operator cab.*

WARNING

TIP OVER HAZARD. All loads shown on rated capacity chart are based on machine being on firm ground with frame level (see page 4-7); the forks being positioned evenly on carriage; the load being centered on forks; proper size tires being properly inflated; and the telehandler being in good operating condition.

https://truckmanualshub.com/

To identify the proper capacity chart on telehandlers equipped with outriggers, refer to the following icons which may be located on the capacity chart.

- Use when lifting a load with outriggers up.

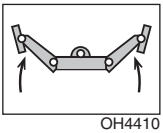
OH4410

- Use when lifting a load with outriggers down.

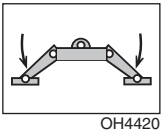
OH4420

https://truckmanualshub.com/

Example

A contractor owns a model xxxxx telehandler with a fork carriage. He knows this attachment may be used with his model since:

- The attachment style, weight, dimensions and load center match the attachment data on the capacity chart.
- The capacity chart is clearly marked for model xxxxx and corresponds with machine configuration being used.

Below are examples with various conditions the contractor may encounter and whether or not the load may be lifted.

	Load Weight	Distance	Height	OK to Lift
1	6000 lb (2722 kg)	18 ft (5,5 m)	12 ft (3,7 m)	Yes
2	4000 lb (1814 kg)	30 ft (9,1 m)	26 ft (7,9 m)	NO
3	7500 lb (3402 kg)	8 ft (2,4 m)	24 ft (7,3 m)	Yes
4	5750 lb (2608 kg)	12 ft (3,7 m)	44 ft (13,4 m)	NO

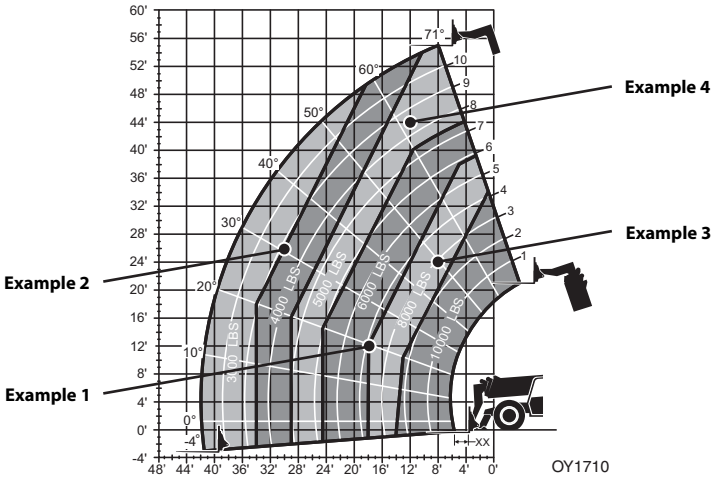

Note: *This is a sample capacity chart* ***only****!* ***DO NOT*** *use this chart, use the one located in your operator cab.*

https://truckmanualshub.com/

This Page Intentionally Left Blank

https://truckmanualshub.com/

5.6 ATTACHMENT INSTALLATION

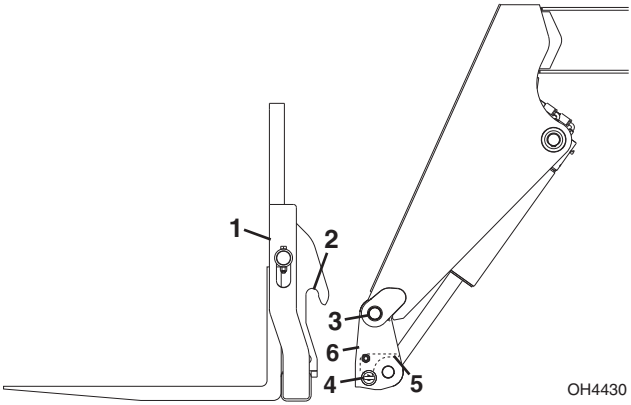

1. ***Attachment***
2. ***Attachment Pin Recess***
3. ***Attachment Pin***
4. ***Lock Pin***
5. ***Lock Lever***
6. ***Quick Coupler*** (attachment tilt control in cab, see Boom Joystick page 3-12)

WARNING

CRUSH HAZARD. Always be certain that carriage or attachment is properly positioned on boom and is secured by lock pin and lock lever. Failure to ensure proper installation could permit carriage/attachment/load to disengage.

https://truckmanualshub.com/

This installation procedure is designed for one-person operation. Prior to exiting cab, perform *"Shut-Down Procedure"* on page 4-3.

1. Tilt quick coupler back to provide clearance. Check to be sure lock pin is removed.

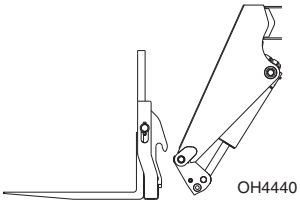

2. Align attachment pin with recess in attachment. Raise boom slightly to engage attachment pin in recess.

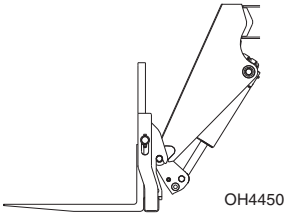

3. Tilt quick coupler forward to engage attachment.

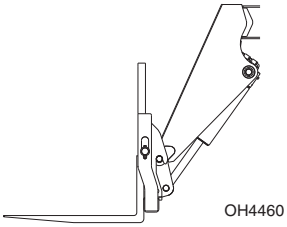

4. Lift lock lever and insert lock pin completely through quick coupler. Release lock lever and ensure lock pin is secured.

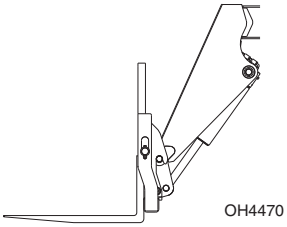

5. If equipped, connect auxiliary hydraulic hoses. See *"Hydraulic Operated Attachment"* on page 5-12.

https://truckmanualshub.com/

Hydraulic Operated Attachment

1. Install attachment (see page 5-10).
2. Lower attachment to ground and perform *"Shut-Down Procedure"* on page 4-3.

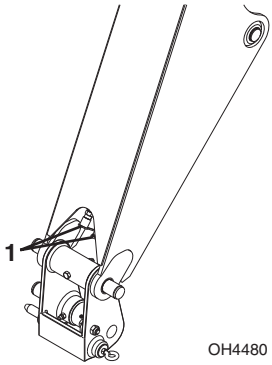

3. Connect attachment hoses to both auxiliary fittings (**1**).

https://truckmanualshub.com/

5.7 ADJUSTING/MOVING FORKS

Carriages may have different locations where forks can be positioned. Two different methods can be used for repositioning, depending upon the carriage structure.

Note: *Apply a light coating of appropriate lubricant to ease sliding of forks or fork bar.*

To slide forks:

1. Ensure attachment is properly installed. See *"Attachment Installation"* on page 5-10.
2. Elevate attachment to approximately 5 ft (1,5 m) and tilt carriage forward until fork heel is free from attachment.
3. Stand at side of carriage. To slide fork toward center of carriage, push the fork near the fork eye. To slide fork toward edge of carriage, pull the fork near the fork eye. To avoid pinching, do not place fingers or thumb between fork and carriage structure.

If removing fork bar is necessary:

1. Rest forks on ground.
2. Remove fork bar.
3. Reposition forks.
4. Reinstall fork bar and fork bar retaining mechanism(s).

https://truckmanualshub.com/

5.8 ATTACHMENT OPERATION

- Capacities and range limits for telehandler change depending on attachment in use.
- Separate attachment instructions must be kept in manual holder in cab with this Operation & Safety Manual. An additional copy must be kept with attachment if it is equipped with a manual holder.

NOTICE

EQUIPMENT DAMAGE. Some attachments may contact front tires or machine structure when the boom is retracted and the attachment is rotated. Improper use of attachment may result in attachment or machine structural damage.

NOTICE

EQUIPMENT DAMAGE. Avoid contact with any structure or object when lifting a load. Maintain clearance around boom structure and load. Failure to maintain clearance may result in attachment or machine structural damage.

https://truckmanualshub.com/

Carriage with Forks

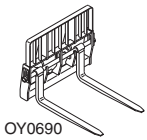
OY0690

Use Carriage Attachment Capacity Chart.

To determine maximum capacity, refer to *"Telehandler/Attachment/ Fork Capacity"* on page 5-4.

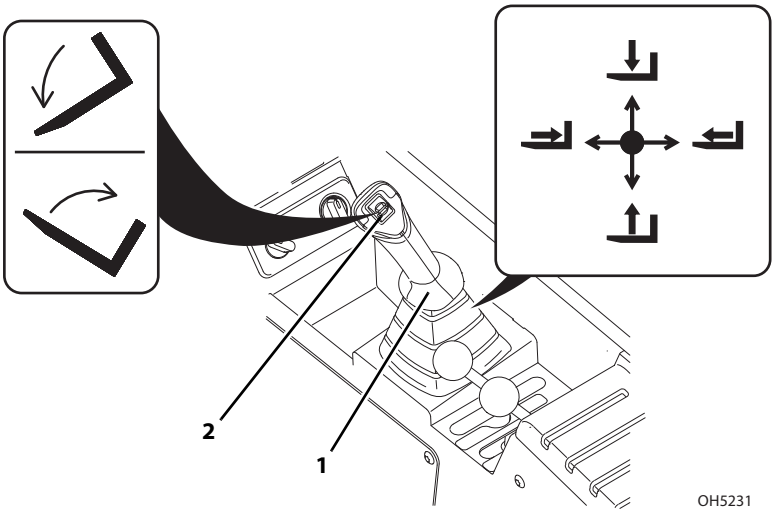

Joystick (**1**) controls movement of the boom.

Roller switch (**2**) controls fork tilt.

- Move joystick back to tilt up.
- Move joystick forward to tilt down.

Installation Procedure:

Refer to *"Attachment Installation"* on page 5-10.

Equipment Damage Precautions:

- Do not use forks as a lever to pry material. Excessive prying forces could damage forks or machine structure.
- Do not attempt to lift loads that are attached or connected to another object.

https://truckmanualshub.com/

Side Shift Carriage

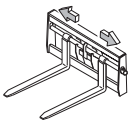
OAL1540

Use Side Shift Carriage Capacity Chart.

To determine maximum capacity, refer to *"Telehandler/Attachment/ Fork Capacity"* on page 5-4.

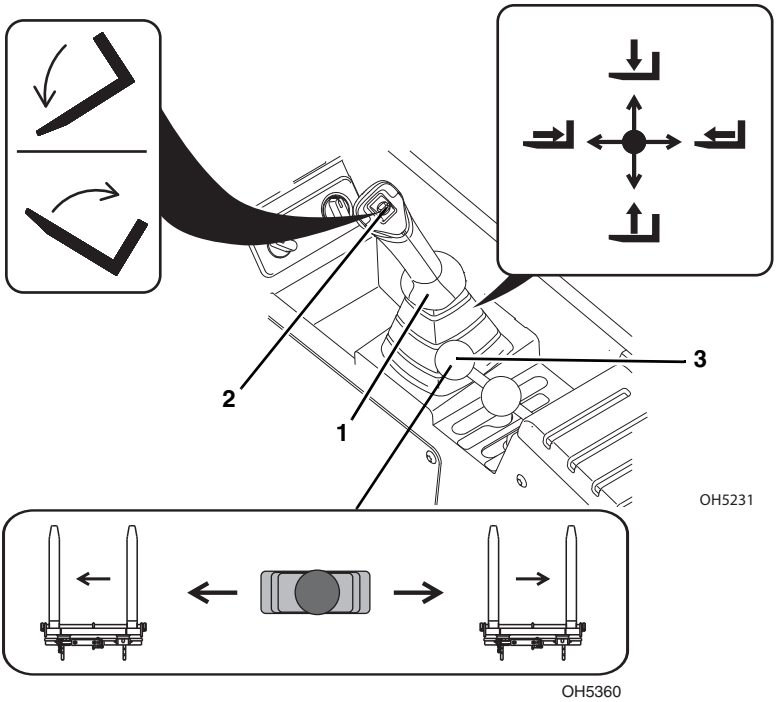

Joystick (**1**) controls movement of the boom.

Roller switch (**2**) controls fork tilt.

- Press roller switch down to tilt up.
- Press roller switch up to tilt down.

To Side Shift:

Auxiliary hydraulic lever (**3**) controls carriage side shift.

- Move lever left to shift left.
- Move lever right to shift right.

https://truckmanualshub.com/

Installation Procedure:

- Refer to *"Attachment Installation"* on page 5-10.

WARNING

CRUSH HAZARD. Do not use side shift to push or pull objects or load. Failure to comply could cause object or load to fall.

Equipment Damage Precautions:

- Do not use forks as a lever to pry material. Excessive prying forces could damage forks or machine structure.
- Do not attempt to lift loads that are attached or connected to another object.

https://truckmanualshub.com/

Side Tilt Carriage

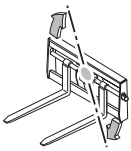
OAL1550

Use Side Tilt Carriage Attachment Capacity Chart.

To determine maximum capacity, refer to *"Telehandler/Attachment/ Fork Capacity"* on page 5-4.

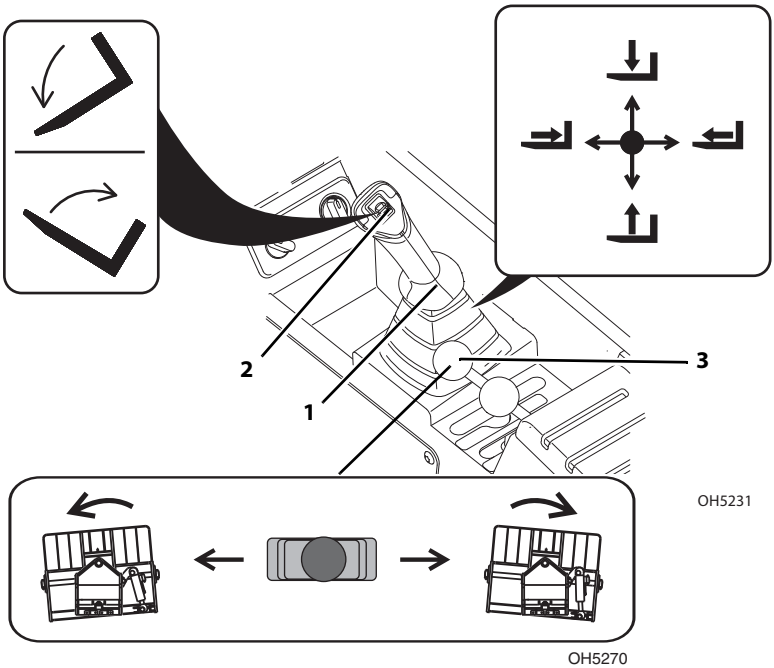

Joystick (**1**) controls movement of the boom.

Roller switch (**2**) controls fork tilt.

- Press roller switch down to tilt up.
- Press roller switch up to tilt down.

To Side Tilt:

Auxiliary hydraulic lever (**3**) controls the carriage side tilt.

- Move lever left to side tilt left.
- Move lever right to side tilt right.

https://truckmanualshub.com/

Installation Procedure:

- Refer to *"Attachment Installation"* on page 5-10.

WARNING

CRUSH HAZARD. Do not use side tilt to push or pull objects or load. Failure to comply could cause object or load to fall.

Operation:

- Approach load with forks centered on load and stop telehandler.
- Level telehandler before side tilting carriage to engage load.
- Side tilt carriage to left or right to align forks with load and engage load.
- Raise load slightly and level carriage side to side.
- Travel in accordance with requirements set forth in Section 1- General Safety Practices.

Equipment Damage Precautions:

- Do not use forks as a lever to pry material. Excessive prying forces could damage forks or machine structure.
- Do not attempt to lift loads that are attached or connected to another object.

https://truckmanualshub.com/

Swing Carriage

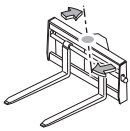
OU2150

Use Swing Carriage Attachment Capacity Chart.

To determine maximum capacity, refer to *"Telehandler/Attachment/ Fork Capacity"* on page 5-4.

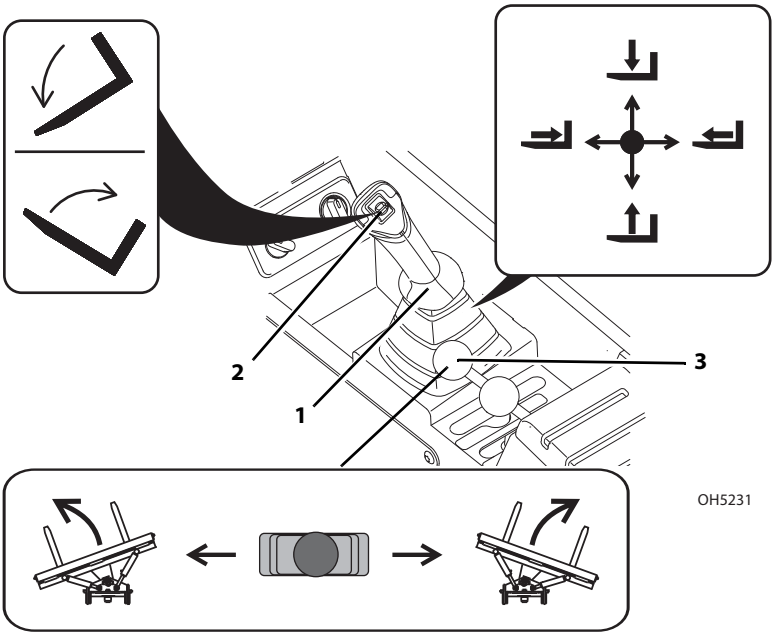

OH5280

Joystick (**1**) controls movement of the boom.

Roller switch (**2**) controls fork tilt.

- Press roller switch down to tilt up.
- Press roller switch up to tilt down.

To Swing:

Auxiliary hydraulic lever (**3**) controls the swing function.

- Move lever left to swing left.
- Move lever right to swing right.

https://truckmanualshub.com/

Installation Procedure:

- Refer to *"Attachment Installation"* on page 5-10.

WARNING

CRUSH HAZARD. Always level forks (horizontally) and telehandler frame before swinging load to side. Swinging unlevel forks could cause load to slide off forks.

WARNING

CRUSH HAZARD. Do not use swing carriage to push or pull objects or load. Failure to comply could cause object or load to fall.

WARNING

CRUSH HAZARD. Use retaining pin (if equipped) for locking swing frame to fixed frame when carrying loads greater than 5000 lb. Failure to comply could cause object or load to fall.

Operation:

- To drive with a load, keep forks pointed forward and travel in accordance with requirements set forth in Section 1- General Safety Practices.

Equipment Damage Precautions:

- Do not use forks as a lever to pry material. Excessive prying forces could damage forks or machine structure.
- Do not attempt to lift loads that are attached or connected to another object.

https://truckmanualshub.com/

Dual Fork Positioning Carriage

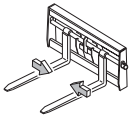
OZ3670

Use Carriage Attachment Capacity Chart.

To determine maximum capacity, refer to *"Telehandler/Attachment/ Fork Capacity"* on page 5-4.

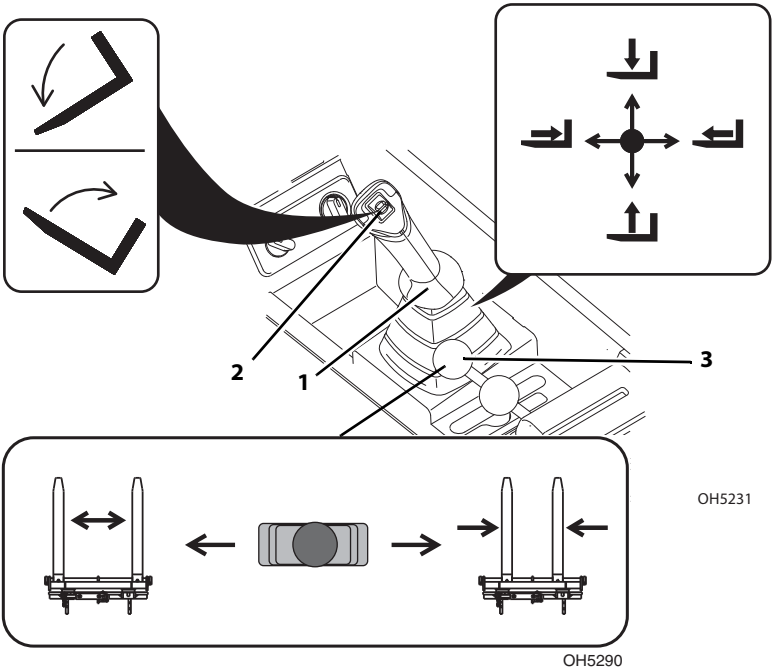

Joystick (**1**) controls movement of the boom.

Roller switch (**2**) controls fork tilt.

- Press roller switch down to tilt up.
- Press roller switch up to tilt down.

To Fork Position:

Auxiliary hydraulic lever (**3**) controls fork position.

- Move lever left to shift forks out.
- Move lever right to shift forks in.

https://truckmanualshub.com/

Installation Procedure:

- Refer to *"Attachment Installation"* on page 5-10.

WARNING

CRUSH HAZARD. Do not use fork positioning to push or pull objects or load. Failure to comply could cause object or load to fall.

Operation:

- Travel in accordance with requirements set forth in Section 1- General Safety Practices.

Equipment Damage Precautions:

- Do not use forks as a lever to pry material. Excessive prying forces could damage forks or machine structure.
- Do not attempt to lift loads that are attached or connected to another object.

https://truckmanualshub.com/

Mast Carriage

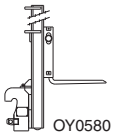

Use Mast Carriage Attachment Capacity Chart.

To determine maximum capacity, refer to *"Telehandler/Attachment/ Fork Capacity"* on page 5-4.

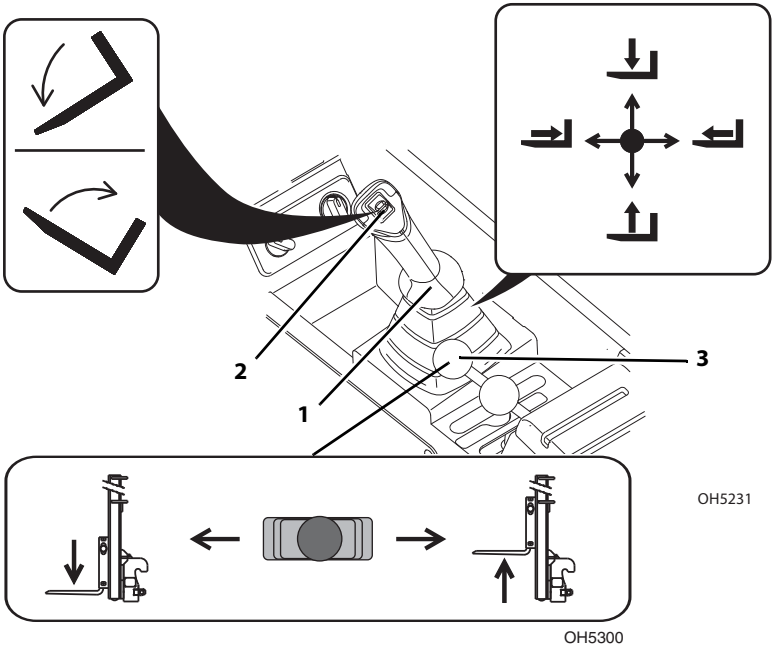

Joystick (**1**) controls movement of the boom.

Roller switch (**2**) controls fork tilt.

- Press roller switch down to tilt up.
- Press roller switch up to tilt down.

To Raise/Lower Mast:

Auxiliary hydraulic lever (**3**) controls the raise/lower movement of the mast.

- Move lever left to lower.
- Move lever right to raise.

https://truckmanualshub.com/

Installation Procedure:

- Refer to *"Attachment Installation"* on page 5-10.

WARNING

CRUSH HAZARD. Do not use mast to push or pull objects or load. Failure to comply could cause object or load to fall.

Operation:

- Always lower forks fully in mast before engaging load.
- To drive with a load, lower forks fully in mast and travel in accordance with requirements set forth in Section 1- General Safety Practices.
- Use a signal person to assist in positioning of load if necessary.

Equipment Damage Precautions:

- Do not use forks as a lever to pry material. Excessive prying forces could damage forks or machine structure.
- Do not attempt to lift loads that are attached or connected to another object.

https://truckmanualshub.com/

Pipe Grapple

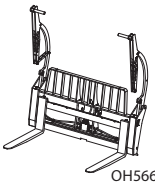
OH5660

Use Pipe Grapple Attachment Capacity Chart.

To determine maximum capacity, refer to *"Telehandler/Attachment/ Fork Capacity"* on page 5-4.

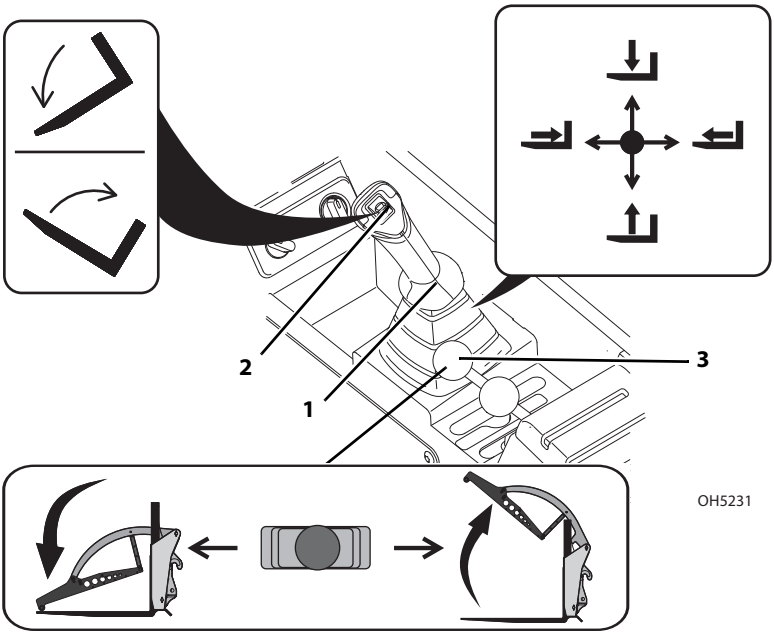

OH5231

OH5651

Joystick (**1**) controls movement of the boom.

Roller switch (**2**) controls pipe grapple tilt.

- Press roller switch down to tilt up.
- Press roller switch up to tilt down.

To Open/Close Pipe Grapple:

Auxiliary hydraulic lever (**3**) controls the open/close movement of pipe grapple.

- Move lever left to close pipe grapple.
- Move lever right to open pipe grapple.

https://truckmanualshub.com/

Installation Procedure:

- Refer to *"Attachment Installation"* on page 5-10.

Operation:

- Raise or lower boom to appropriate height and open pipe grapple for loading material.
- Align and center telehandler with face of material.
- Drive slowly and smoothly into material for loading. Boom extension may be required for loading of material in some situations.
- Center load on forks, tilt forks up far enough to retain load, close pipe grapple and back away.
- Travel in accordance with requirements set forth in Section 1- General Safety Practices.
- Open pipe grapple and unload material from forks.

Equipment Damage Precautions:

- Except for lifting or unloading material, the boom must be fully retracted for all operations.
- Do not use forks as a lever to pry material. Excessive prying forces could damage forks or machine structure.
- Do not use pipe grapple as a lever to pry material. Excessive prying forces could damage pipe grapple or machine structure.
- Do not attempt to load material which is hard or frozen. This could cause severe damage to quick coupler or machine structure.
- Do not attempt to lift loads that are attached or connected to another object.

https://truckmanualshub.com/

Fork Extension

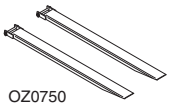

Use Appropriate Carriage Attachment Capacity Chart.

To determine maximum capacity, refer to *"Telehandler/Attachment/Fork Capacity"* on page 5-4. The maximum capacity of the carriage when equipped with fork extensions may be reduced to the capacity indicated on the fork extensions. If the load exceeds the capacity of the fork extension contact JLG to obtain forks and/or fork extensions of the proper load rating and length.

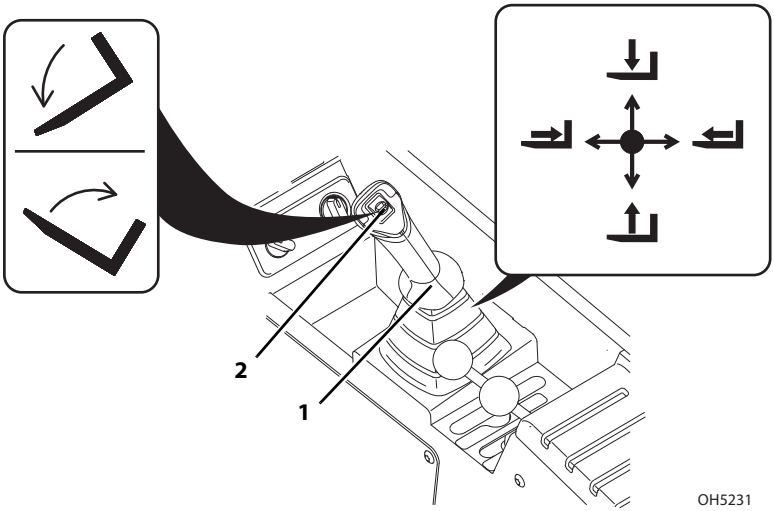

Joystick (**1**) controls movement of the boom.

Roller switch (**2**) controls fork tilt.

- Press roller switch down to tilt up.
- Press roller switch up to tilt down.

https://truckmanualshub.com/

Installation Procedure:

- Ensure carriage is properly installed. Refer to *"Attachment Installation"* on page 5-10.
- Ensure length and cross section of the parent fork arm is equal to or exceeds the parent fork arm blade length stamped into the fork extension.
- Secure the fork extensions to the forks by sliding the fork extensions onto the parent forks and install the retaining pin behind the vertical shank of the fork.

Operation:

- Heavy part of load must be against carriage backrest.
- Do not allow load center of gravity to be in front of tip of the supporting fork.
- Do not pick up a load or pry materials with tip of fork extensions.

https://truckmanualshub.com/

Coupler Mounted Hook

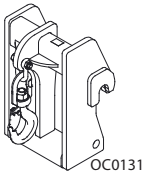

Use Coupler Mounted Hook Capacity Chart.

To determine maximum capacity, refer to *"Telehandler/Attachment/ Fork Capacity"* on page 5-4.

Suspend loads in accordance with requirements set forth in Section 1- General Safety Practices.

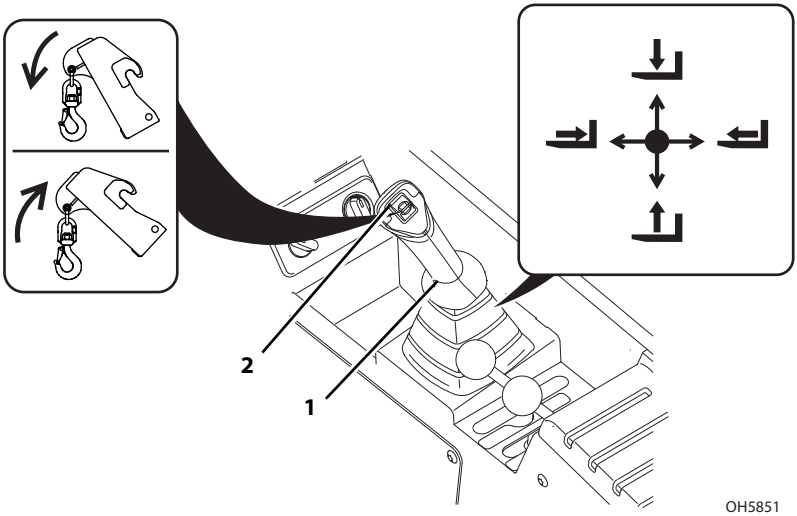

Joystick (**1**) controls movement of the boom.

Roller switch (**2**) controls coupler mounted hook tilt.

- Press roller switch down to tilt up.
- Press roller switch up to tilt down.

https://truckmanualshub.com/

Installation Procedure:

- Refer to *"Attachment Installation"* on page 5-10.

Operation:

- Weight of rigging weight must be included as part of total load being lifted.

https://truckmanualshub.com/

Fork Mounted Hook

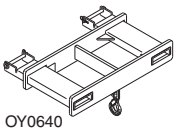

Use Appropriate Carriage Attachment Capacity Chart.

To determine maximum capacity, refer to *"Telehandler/Attachment/ Fork Capacity"* on page 5-4.

Suspend loads in accordance with requirements set forth in Section 1- General Safety Practices.

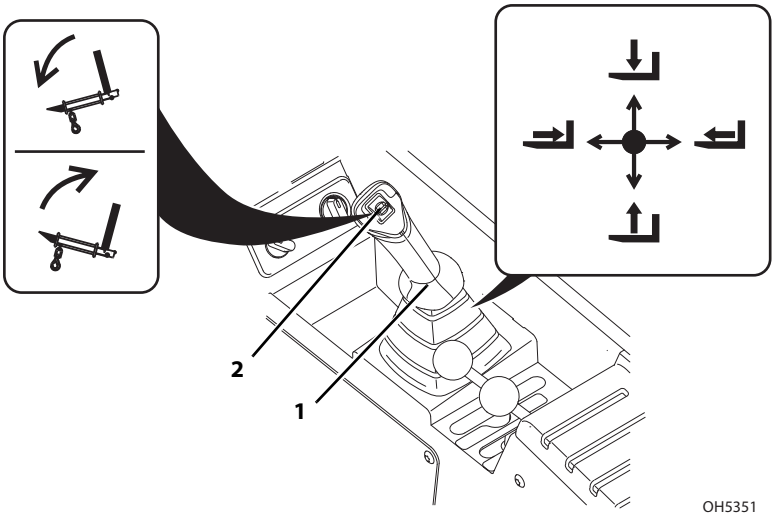

Joystick (**1**) controls movement of the boom.

Roller switch (**2**) controls fork tilt.

- Press roller switch down to tilt up.
- Press roller switch up to tilt down.

https://truckmanualshub.com/

Installation Procedure:

- Ensure carriage is properly installed. Refer to *"Attachment Installation"* on page 5-10.
- Secure the fork mounted hook to the forks by sliding the fork mounted hook onto the parent forks and install the retaining pin behind the vertical shank of the fork.

Operation:

- Pallet or lumber forks of an appropriate load rating must be used. Do not use with cubing or block forks.
- Fork mounted hook and rigging weight must be included as part of total load being lifted.
- Do not use with mast carriage attachment.
- Do not use fork mounted hook with attachments capable of rotating (i.e. side tilt and swing carriages) without disabling the rotation feature(s).

https://truckmanualshub.com/

Bucket

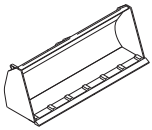
OZ0730

Use Appropriate Bucket Attachment Capacity Chart.

To determine maximum capacity, refer to *"Telehandler/Attachment/ Fork Capacity"* on page 5-4.

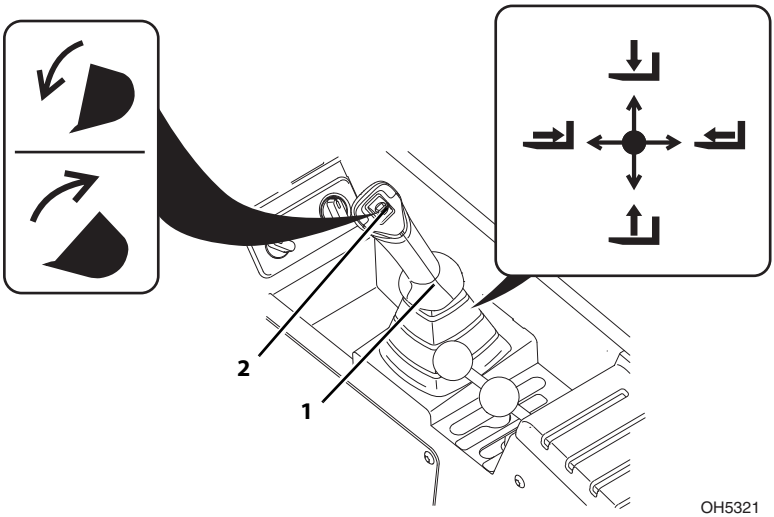

Joystick (**1**) controls movement of the boom.

Roller switch (**2**) controls bucket tilt.

- Press roller switch down to tilt up.
- Press roller switch up to tilt down.

https://truckmanualshub.com/

Installation Procedure:

- Refer to *"Attachment Installation"* on page 5-10.

Operation:

- Raise or lower boom to appropriate height for loading material from stockpile.
- Align telehandler with face of stockpile and drive slowly and smoothly into pile to load bucket.
- Tilt bucket up far enough to retain load and back away from pile.
- Travel in accordance with requirements set forth in Section 1- General Safety Practices.
- Tilt bucket down to dump load.

Equipment Damage Precautions:

- Except for lifting or dumping a load, the boom must be fully retracted for all bucket operations.
- Do not corner-load bucket. Distribute material evenly within the bucket. Bucket capacity charts are for evenly distributed loads only.
- Do not use bucket as a lever to pry material. Excessive prying forces could damage bucket or machine structure.
- Do not attempt to load material which is hard or frozen. This could cause severe damage to quick coupler or machine structure.
- Do not use bucket for "back dragging." This could cause severe damage to quick coupler and retraction cables/chains.

https://truckmanualshub.com/

Grapple Bucket

OZ1450

Use Grapple Bucket Attachment Capacity Chart.

To determine maximum capacity, refer to *"Telehandler/Attachment/ Fork Capacity"* on page 5-4.

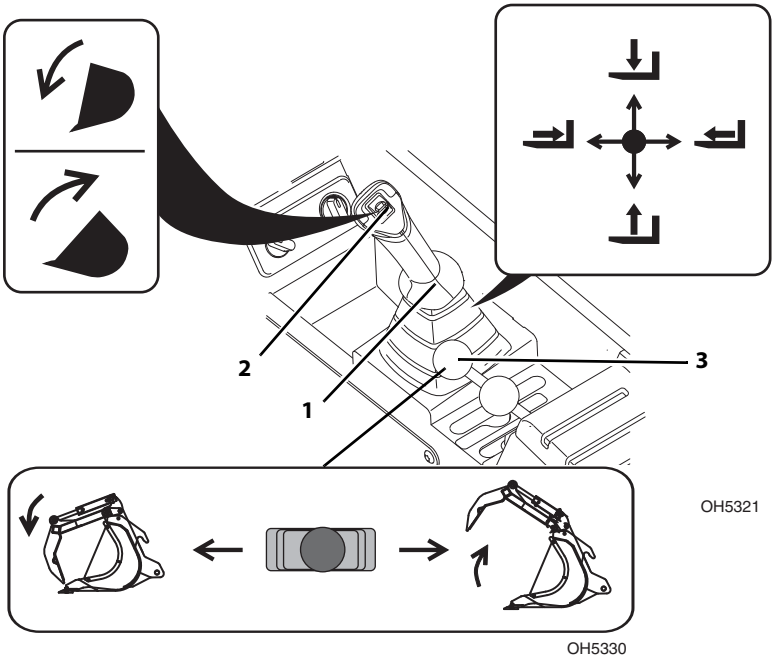

Joystick (**1**) controls movement of the boom.

Roller switch (**2**) controls bucket tilt.

- Press roller switch down to tilt up.
- Press roller switch up to tilt down.

To Open/Close Grapple:

Auxiliary hydraulic lever (**3**) controls the open/close movement of the grapple.

- Move lever left to close grapple.
- Move lever right to open grapple.

https://truckmanualshub.com/

Installation Procedure:

- Refer to *"Attachment Installation"* on page 5-10.

Operation:

- Raise or lower boom to appropriate height and open grapple for loading material from stockpile.
- Align telehandler with face of stockpile and drive slowly and smoothly into pile to load bucket.
- Tilt bucket up far enough to retain load, close grapple and back away from pile.
- Travel in accordance with requirements set forth in Section 1- General Safety Practices.
- Open grapple and tilt bucket down to dump load.

Equipment Damage Precautions:

- Except for lifting or dumping a load, the boom must be fully retracted for all bucket operations.
- Do not corner-load bucket. Distribute material evenly within the bucket. Bucket capacity charts are for evenly distributed loads only.
- Do not use bucket as a lever to pry material. Excessive prying forces could damage bucket or machine structure.
- Do not attempt to load material which is hard or frozen. This could cause severe damage to quick coupler or machine structure.
- Do not use bucket for "back dragging." This could cause severe damage to quick coupler and retraction cables/chains.

https://truckmanualshub.com/

Bucket - Fork Mounted

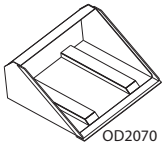

Use Appropriate Carriage Attachment Capacity Chart

To determine maximum capacity, refer to *"Telehandler/Attachment/ Fork Capacity"* on page 5-4.

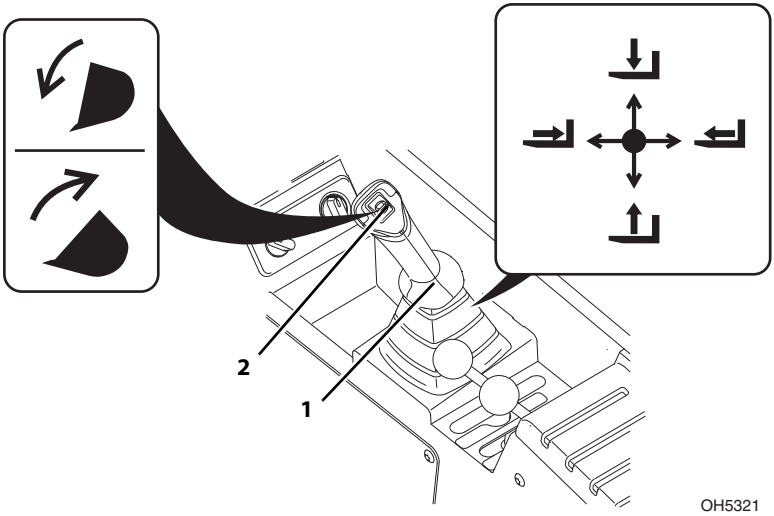

Joystick (**1**) controls movement of the boom.

Roller switch (**2**) controls bucket tilt.

- Press roller switch down to tilt up.
- Press roller switch up to tilt down.

https://truckmanualshub.com/

Installation Procedure:

- Ensure carriage is properly installed. Refer to *"Attachment Installation"* on page 5-10.
- Secure the fork mounted bucket to the forks by sliding the fork mounted bucket onto the parent forks and install the retaining pin behind the vertical shank of the fork.

Operation:

- Raise or lower boom to appropriate height for loading material from stockpile.
- Align telehandler with face of stockpile and drive slowly and smoothly into pile to load bucket.
- Tilt bucket up far enough to retain load and back away from pile.
- Travel in accordance with requirements set forth in Section 1- General Safety Practices.
- Tilt bucket down to dump load.
- Fork mounted bucket weight must be included as part of total load being lifted.
- Do not use with mast carriage attachment.
- Do not use fork mounted bucket with attachments capable of rotating (i.e. side tilt and swing carriages) without disabling the rotation feature(s).

Equipment Damage Precautions

- Except for lifting or dumping a load, the boom must be fully retracted for all bucket operations.
- Do not corner-load bucket. Distribute material evenly within the bucket. Capacity charts are for evenly distributed loads only.
- Do not use bucket as a lever to pry material. Excessive prying forces could damage bucket or machine structure.
- Do not attempt to load material which is hard or frozen. This could cause severe damage to coupler or machine structure.
- Do not use bucket for "back dragging." This could cause severe damage to coupler and retraction cables/chains.

https://truckmanualshub.com/

Trash Hopper - Fork Mounted

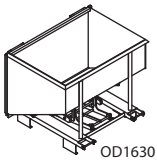

Use Appropriate Trash Hopper Capacity Chart

To determine maximum capacity, refer to *"Telehandler/Attachment/ Fork Capacity"* on page 5-4.

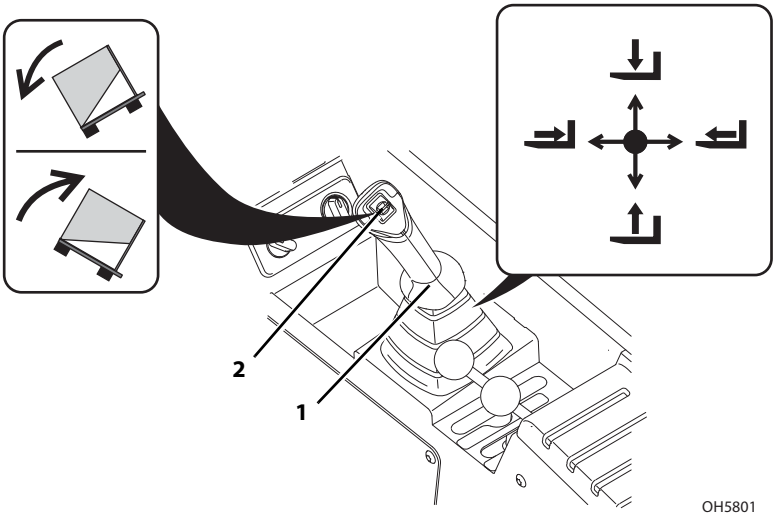

Joystick (**1**) controls movement of the boom

Roller switch (**2**) controls trash hopper tilt.

- Press roller switch down to tilt up.
- Press roller switch up to tilt down.

https://truckmanualshub.com/

Installation Procedure:

- Ensure carriage is properly installed. Refer to *"Attachment Installation"* on page 5-10.
- Secure the fork mounted trash hopper to the forks by sliding the fork mounted trash hopper onto the parent forks and install the retaining pin behind the vertical shank of the fork.

Operation:

- Raise or lower boom to appropriate height for loading material.
- Travel in accordance with requirements set forth in Section 1- General Safety Practices.
- To release gate, tilt fork mounted trash hopper down approximately 10 degrees and engage bottom bumper on edge of dumpster. The gate will open allowing the contents to slide out.
- Tilt fork mounted trash hopper back to close and secure the gate.
- Do not use with mast carriage attachment.
- Do not use fork mounted trash hopper with attachments capable of rotating (i.e. side tilt carriages) without disabling the rotation feature(s).

Equipment Damage Precautions

- Except for lifting or dumping a load, the boom must be fully retracted for all fork mounted trash hopper operations.

https://truckmanualshub.com/

Truss Boom

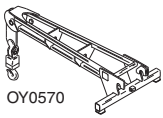

Use Appropriate Truss Boom Attachment Capacity Chart.

To determine maximum capacity, refer to *"Telehandler/Attachment/ Fork Capacity"* on page 5-4.

Suspend loads in accordance with requirements set forth in Section 1- General Safety Practices.

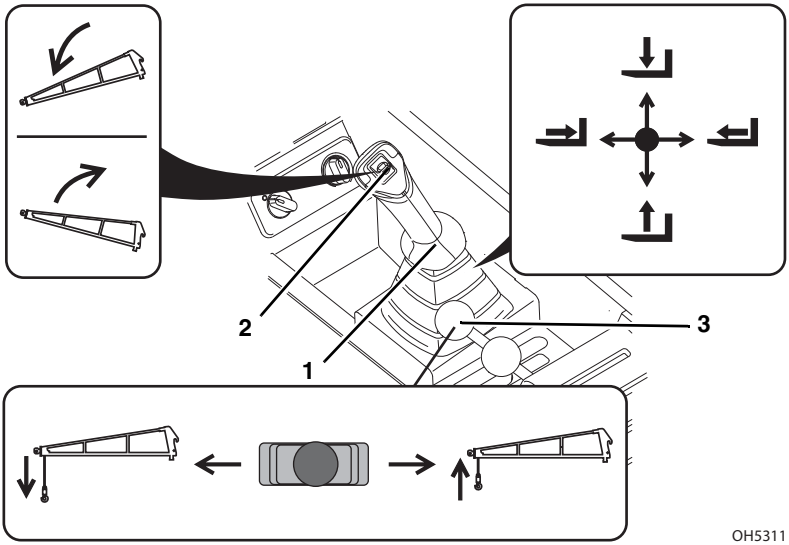

Joystick (**1**) controls movement of the boom.

Roller switch (**2**) controls truss boom tilt.

- Press roller switch down to tilt up.
- Press roller switch up to tilt down.

Winch Control (if equipped):

Auxiliary hydraulic lever (**3**) controls the truss boom mounted winch.

- Move lever left to lower cable.
- Move lever right to raise cable.

https://truckmanualshub.com/

Installation Procedures

Refer to *"Attachment Installation"* on page 5-10.

WARNING

CRUSH HAZARD. Maintain a minimum of three wraps of wire rope on the cable drum at all times. Failure to comply could cause object or load to fall.

Operation:

- Weight of rigging must be included as part of total load being lifted.

https://truckmanualshub.com/

Material Handling Arm

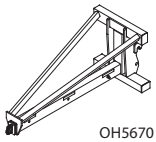

Use Appropriate Material Handling Arm Attachment Capacity Chart.

To determine maximum capacity, refer to *"Telehandler/Attachment/ Fork Capacity"* on page 5-4.

Suspend loads in accordance with requirements set forth in Section 1- General Safety Practices.

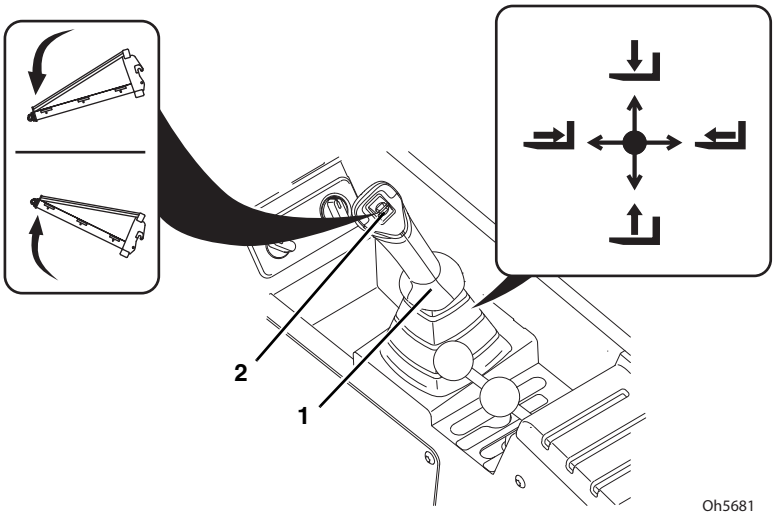

Joystick (**1**) controls movement of the boom.

Roller switch (**2**) controls material handling arm tilt.

- Press roller switch down to tilt up.
- Press roller switch up to tilt down.

https://truckmanualshub.com/

Installation Procedures

- Refer to *"Attachment Installation"* on page 5-10.
- Secure adjustable arm in desired position using the retaining pin.

WARNING

CRUSH HAZARD. Ensure adjustable arm is properly secured using the retaining pin prior to lifting load. Failure to comply could cause object or load to fall.

Operation:

- Weight of rigging must be included as part of total load being lifted.

https://truckmanualshub.com/

Personnel Work Platform - Fork Mounted

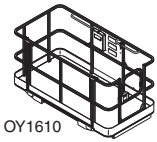

For fork mounted platforms utilized on machines built to the B56.6-2011 Standard or older, use Appropriate Carriage Attachment Capacity Chart.

For fork mounted platforms utilized on machines built to the B56.6-2016 Standard, use Fork Mounted Platform Attachment Capacity Chart.

To determine maximum capacity, refer to *"Telehandler/Attachment/Fork Capacity"* on page 5-4.

The operator and personnel in platform must read and understand the separate personnel work platform manual prior to installing and using a platform.

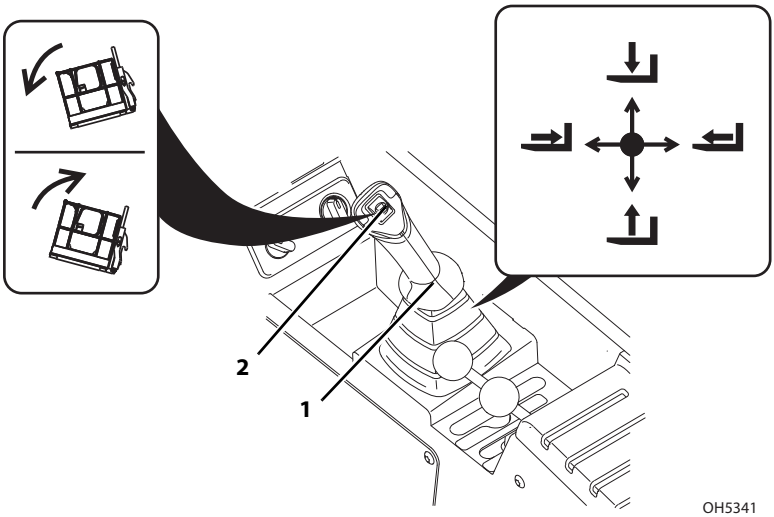

Joystick (**1**) controls movement of the boom.

Roller switch (**2**) controls platform tilt.

- Press roller switch down to tilt up.
- Press roller switch up to tilt down.

https://truckmanualshub.com/

Installation Procedure:

- Ensure carriage is properly installed. Refer to *"Attachment Installation"* on page 5-10.
- Secure the fork mounted platform to the forks by sliding the fork mounted platform onto the parent forks and install the retaining pin behind the vertical shank of the fork.

Preparation and Setup:

1. Ensure the telehandler is on a firm surface and is level.
2. Engage the park brake. Blocking the wheels is also recommended.
3. Level the platform, both side to side (frame level) and front to back (attachment tilt).
4. Keep area under platform free from personnel.
5. When personnel are on platform, the operator must remain seated in cab with personnel in direct line of sight.
6. **DO NOT** lift or carry persons in a bucket or on forks.

WARNING

FALL HAZARD. Never tilt the platform forward, rearward, or level the machine when the platform is occupied.

https://truckmanualshub.com/

Sweeper

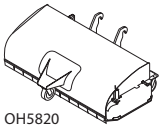
OH5820

Use Sweeper Capacity Chart.

To determine maximum capacity, refer to *"Telehandler/Attachment/ Fork Capacity"* on page 5-4.

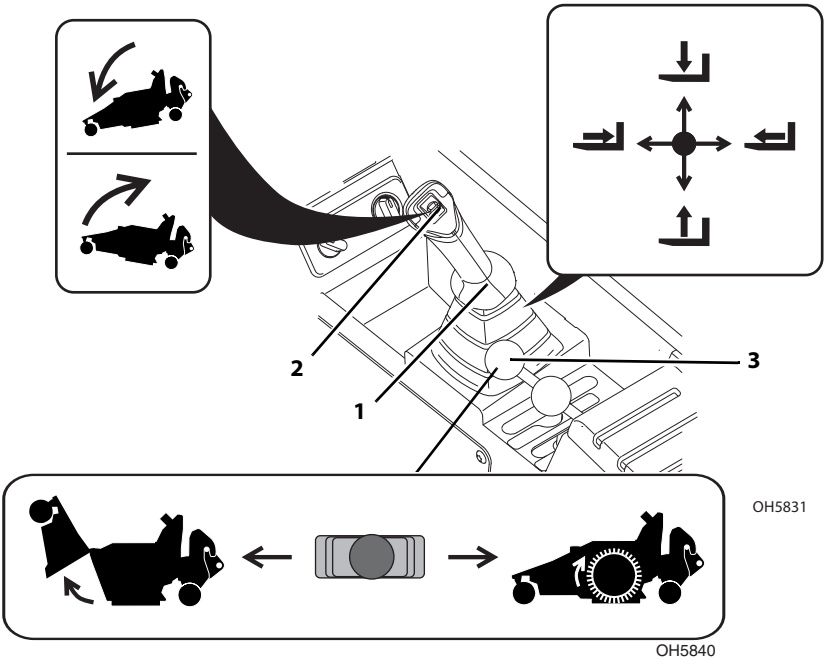

Joystick (**1**) controls movement of the boom.

Roller switch (**2**) controls sweeper tilt.

- Press roller switch down to tilt up.
- Press roller switch up to tilt down.

Sweeper Control:

Auxiliary hydraulic lever (**3**) controls the sweeper.

- Move lever left to open hopper.
- Move lever right to close hopper and engage sweeper brushes.

https://truckmanualshub.com/

Installation Procedure:

- Refer to *"Attachment Installation"* on page 5-10.

WARNING

CRUSH HAZARD. Remove large objects in path of sweeper before operating. Failure to comply could cause object to be thrown by sweeper.

Operation:

- Fully retract boom and lower until all four sweeper wheels are in contact with the ground.
- Operate auxiliary hydraulic lever to engage sweeper brushes.
- Sweep a path less than the width of the sweeper.
- Travel in accordance with requirements set forth in Section 1- General Safety Practices.
- To empty hopper, raise sweeper over desired dump area ensuring proper clearance. Operate auxiliary hydraulic lever to open the hopper allowing the contents to slide out. Close the hopper after all contents are removed.

Equipment Damage Precautions

- Except for emptying hopper, the boom must be fully retracted for all sweeper operations.
- Avoid excessive downward pressure on brushes when sweeping.
- Do not store sweeper with weight on brushes. Place on blocks or storage stands.

https://truckmanualshub.com/

Boom Mounted Lifting Lug

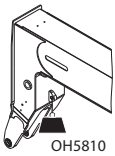

Use Boom Mounted Lifting Lug Capacity Chart.

To determine maximum capacity, refer to *"Telehandler/Attachment/ Fork Capacity"* on page 5-4.

Suspend loads in accordance with requirements set forth in Section 1- General Safety Practices.

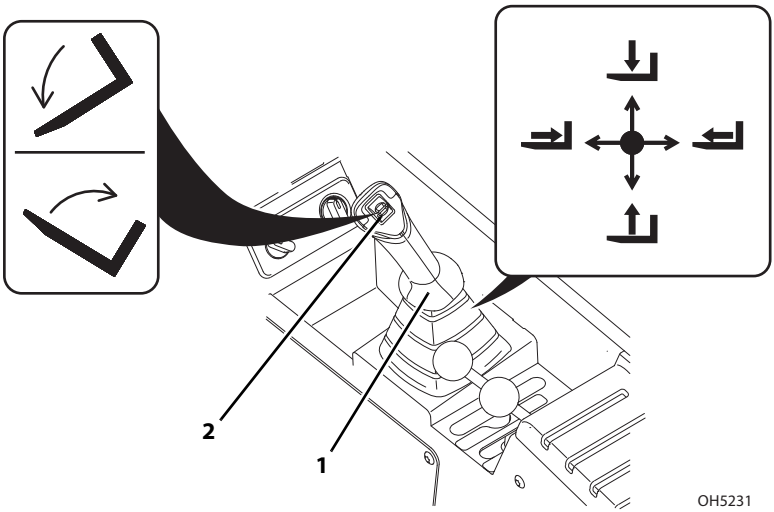

Joystick (**1**) controls movement of the boom.

Roller switch (**2**) controls fork tilt.

- Press roller switch down to tilt up.
- Press roller switch up to tilt down.

WARNING

TIP OVER HAZARD. No load may be on attachment when lifting load with boom mounted lifting lug. Failure to comply could cause tip over.

Operation:

- Weight of rigging must be included as part of total load being lifted.

https://truckmanualshub.com/

SECTION 6 - EMERGENCY PROCEDURES

6.1 TOWING A DISABLED PRODUCT

The following information assumes telehandler cannot be moved under its own power.

- Before moving the telehandler, read all of the following information to understand options available. Then select the appropriate method.
- Machine mounted retrieval devices provide suitable means to attach a tow rope, chain or tow bar only in the event the telehandler becomes stuck or disabled.
- Retrieval devices are not intended for on-road trailer towing applications.
- The steering system permits manual steering if engine or power assist feature fails; however, **steering will be slow and will require much greater force.**
- **DO NOT** attempt to tow a telehandler that is loaded or the boom/attachment is raised above 4 ft (1,2 m).

Moving Short Distances

- If it is only necessary to move telehandler a short distance, less than 100 ft (30 m), it is permissible to use a vehicle of sufficient capacity to tow the unit with no previous preparation. Drive wheels will not roll.

Moving Longer Distances

- See Service Manual for details.
- Dependant on local regulations the appropriate machine Service Manual should be kept in the cab of homologated machines at all times.

Contact the local dealer for specific instructions if neither of these methods are applicable.

https://truckmanualshub.com/

6.2 EMERGENCY LOWERING OF BOOM

In the event of total loss of engine power or hydraulic pump failure with an elevated load, the situation must be properly evaluated and dealt with on an individual basis. **Contact the local dealer for specific instructions.**

Secure the telehandler using the following procedures:

1. If equipped with platform attachment, rescue platform occupants.
2. Clear the area around telehandler of all personnel.
3. Engage the parking brake. Place the transmission in “NEUTRAL”.
4. Block all four wheels.
5. Section off a large area under the boom to restrict any personnel from entering this area.
6. See Service Manual for information.

https://truckmanualshub.com/

6.3 EMERGENCY EXIT FROM ENCLOSED CAB

Fixed Window (if equipped)

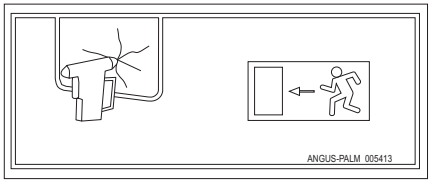

OWO740

- In an emergency, an escape hammer located directly below the rear window in an enclosed cab can be used to exit the telehandler.

Latch Window (if equipped)

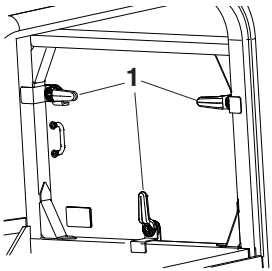

OY3510

- In an emergency, rear window can be removed to exit the telehandler by releasing hand latches (**1**).

https://truckmanualshub.com/

This Page Intentionally Left Blank

https://truckmanualshub.com/

SECTION 7 - LUBRICATION AND MAINTENANCE

7.1 INTRODUCTION

This section is intended as information to assist the operator to perform maintenance tasks only. Service product in accordance with maintenance schedule on the following pages.

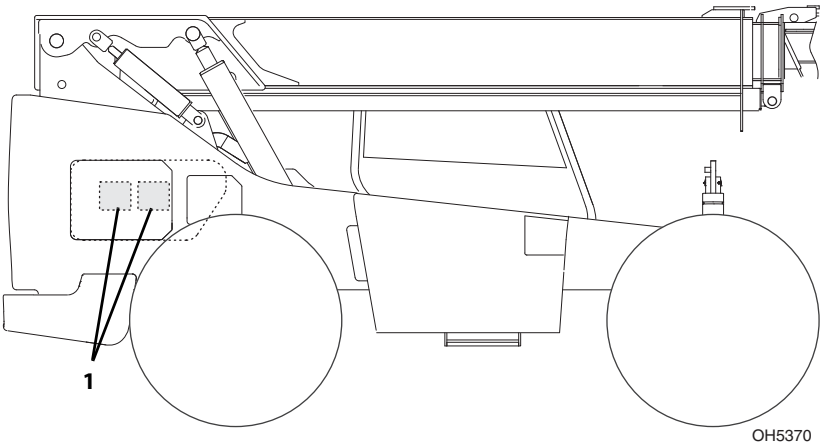

The Lubrication and Maintenance decals (**1**) contain instructions that must be followed to keep this product in good operating condition. The Operation & Safety Manual and Service Manual contain more detailed service information with specific instructions.

Clothing and Safety Gear

- Wear all the protective clothing and personal safety devices issued to you or called for by job conditions.
- **DO NOT** wear loose clothing or jewelry that can get caught on controls or moving parts.

https://truckmanualshub.com/

7.2 GENERAL MAINTENANCE INSTRUCTIONS

Prior to performing any service or maintenance on telehandler, follow shut-down procedure on page 4-3 unless otherwise instructed. Ensure telehandler is level, for proper fluid readings.

- Clean lubrication fittings before lubricating.
- After greasing telehandler, cycle all functions several times to distribute lubricants. Perform this maintenance procedure without attachment installed.
- Apply a light coating of engine oil to all linkage pivot points.
- Intervals shown are for normal usage and conditions. Adjust intervals for abnormal usage and conditions.
- Check all lubricant levels when lubricant is cool, with the exception of the transmission fluid. For ease of filling hydraulic reservoir, use a funnel with a hose or flexible tube for best results.

WARNING

CUT/CRUSH/BURN HAZARD. Do not perform service or maintenance on the machine with the engine running, with the exception of the transmission oil level check.

https://truckmanualshub.com/

7.3 MAINTENANCE SCHEDULES

Note: *If hour and year intervals are listed, perform maintenance at interval that occurs first.*

Every 10 Hours

OC0960

Drain Fuel/Water Separator

OC0970

Check Engine Coolant Level

OC0910

Check Engine Oil Level

OC0920

Check Hydraulic Oil Level

OC0930

Check Transmission Oil Level

OC0890

Check Tire Condition and Pressure

OC0950

Check Air Cleaner

OC0880

Check Fuel Level

OC0940

Check DEF Level (if equipped for ULS/85 or 110HP)

OC0900

Check Brake Fluid Level (SN 0160074878 to Present)

OC0980

Additional Checks (see Section 8)

First 50 Hours

OC1000

Check Boom Chain Tension

OC0990

Check Wheel Lug Nut Torque

https://truckmanualshub.com/

Every 50 Hours

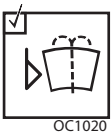

Check Washer Fluid

Lubrication Schedule

First 250 Hours

Change Axle Oil

Change Wheel End Oil

Change Transmission Fluid and Filter

Every 250 Hours

Lubrication Schedule

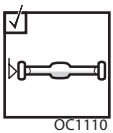

Check Axle Oil Level

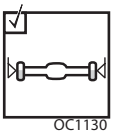

Check Wheel End Oil Level

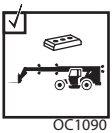

Check Boom Wear Pads

Check Boom Chains

https://truckmanualshub.com/

First 500 Hours

Change Engine Oil and Filter (if equipped for ULS)

Every 500 Hours

Check Fan Belt

Change Engine Oil and Filter (if equipped for LS)

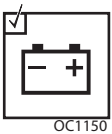

Check Battery

Check Wheel Lug Nut Torque

Every 750 Hours

Change Hydraulic Fluid

Change Hydraulic Tank Breather (if equipped for ULS)

https://truckmanualshub.com/

Every 1000 Hours

OC1010

Lubrication Schedule

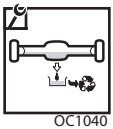
OC1040

Change Axle Oil

OC1050

Change Wheel End Oil

OC1170

Change Engine Oil and Filter (if equipped for ULS, see note)

OC1070

Change Transmission Fluid and Filter

OC1000

Check Boom Chain Tension

OH5860

Grease Boom Chains

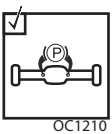

OC1210

Check Park Brake

OC1220

Change Fuel Filters

OC1200

Check Air Intake System

Note: *If using fully synthetic oil, metal engine oil filter and fuel consumption is less than 11.4 liter per hour (3 gallon per hour), oil change intervals are 1,000 hours or 1 year. If any of the following are present, conventional oil, plastic engine oil filter or fuel consumption is greater than 11.4 liter per hour (3 gallon per hour), oil change intervals are 500 hours or 6 months.*

Every 1500 Hours

OC1230

Change Hydraulic Fluid and Filters

https://truckmanualshub.com/

Every 2000 Hours or 2 Years

Change Engine Coolant and Clean Engine DEF Strainer (if equipped for ULS/85 or 110HP)

Change DEF Tank Filter (if equipped for ULS/85 or 110HP)

Change Engine Coolant (if equipped for LS)

Every 4000 Hours or 3 Years

Change DEF Pump Filter (if equipped for ULS/85or 110HP)

Every 5000 Hours or 4 Years

Engine Valve Lash Adjustment

https://truckmanualshub.com/

7.4 LUBRICATION SCHEDULES

50 Hour Lubrication Schedule

6036 & 6042

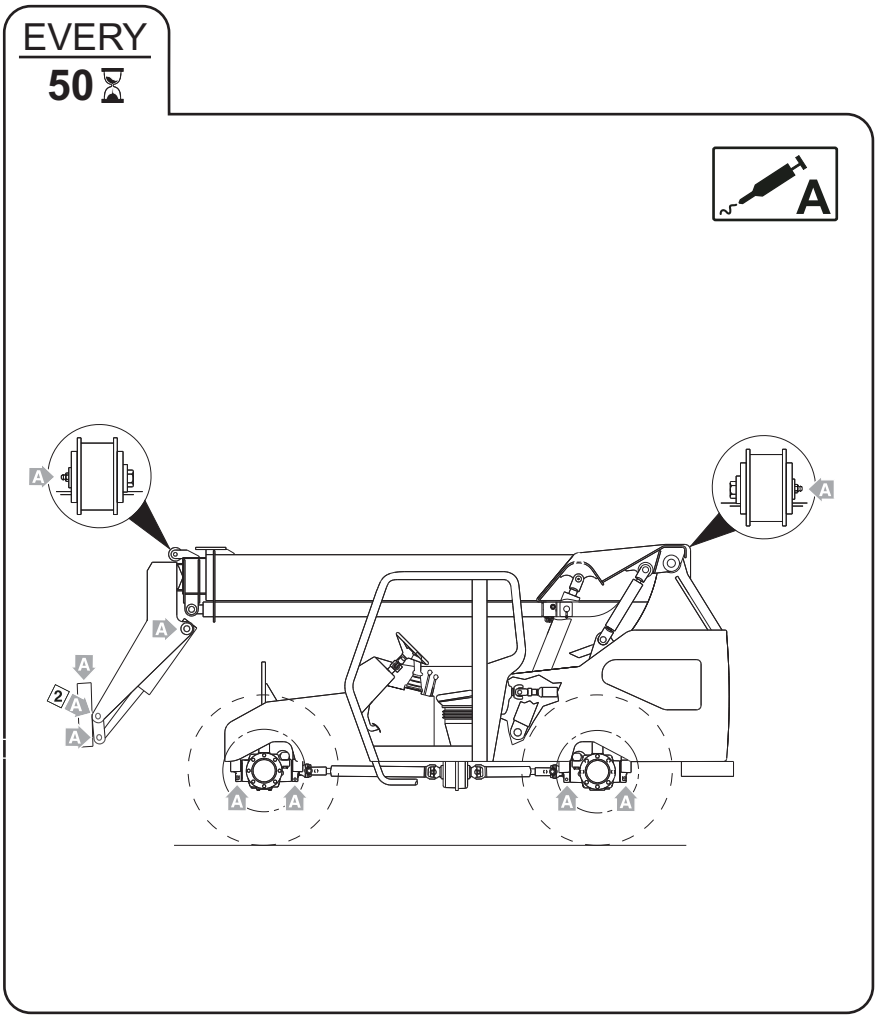

OH5721

https://truckmanualshub.com/

8042 & 10042

EVERY
50

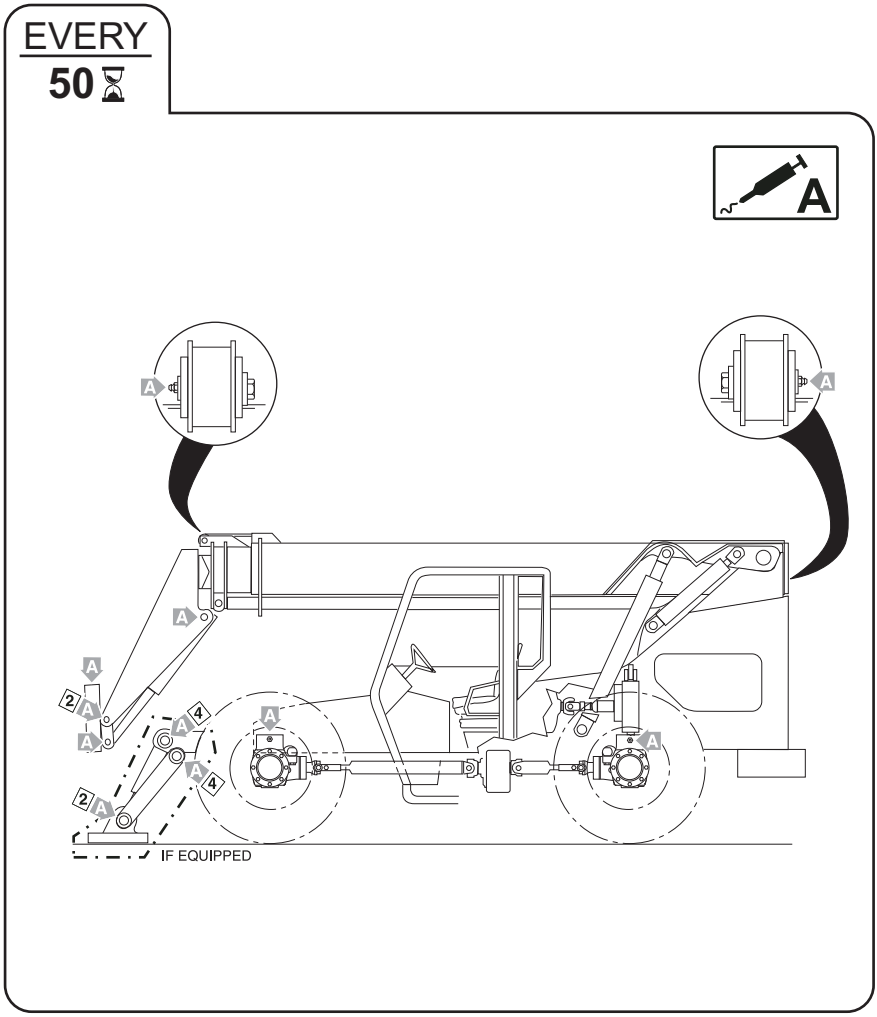

OH5731

https://truckmanualshub.com/

10054

EVERY
50

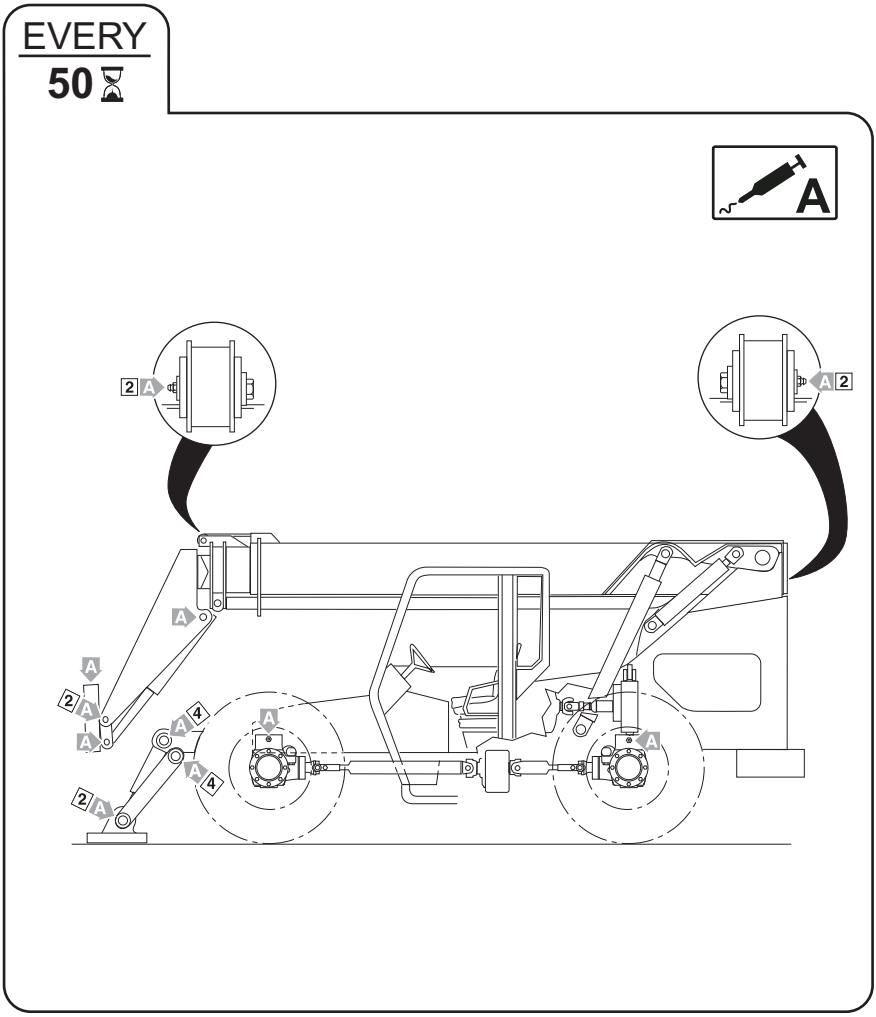

OH5711

https://truckmanualshub.com/

250 Hour Lubrication Schedule

6036 & 6042

EVERY
250

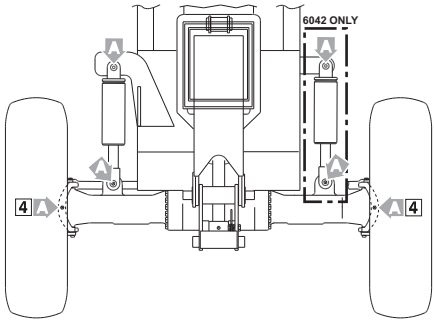

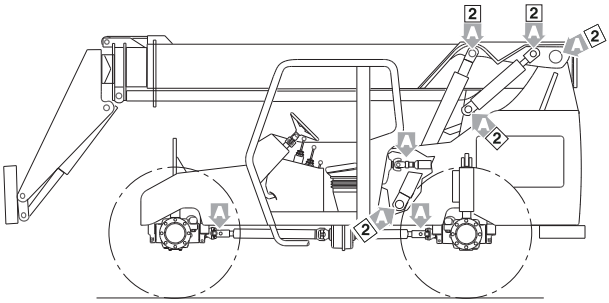

OA1830

https://truckmanualshub.com/

EVERY
250

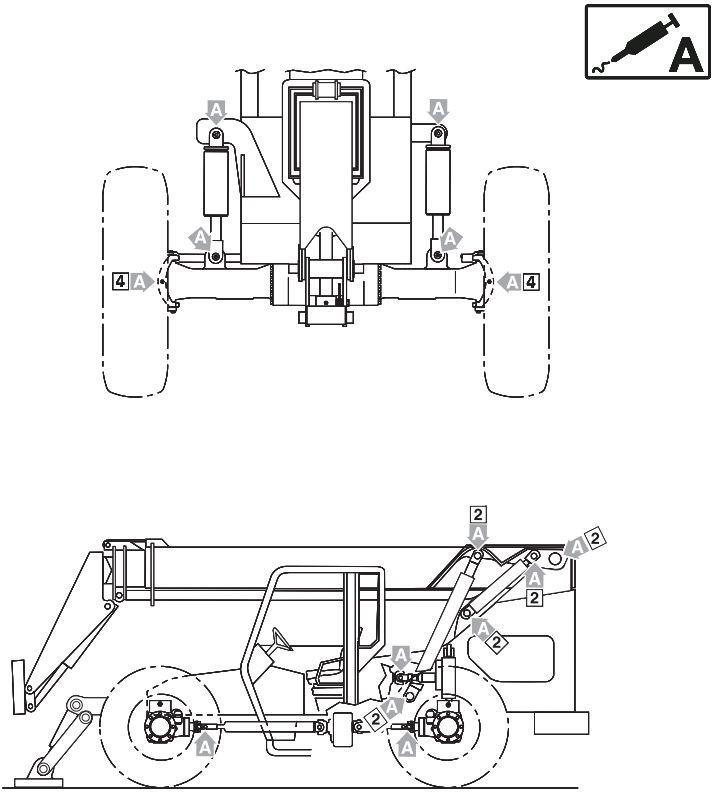

OH5740

https://truckmanualshub.com/

1000 Hour Lubrication Schedule

EVERY
1000

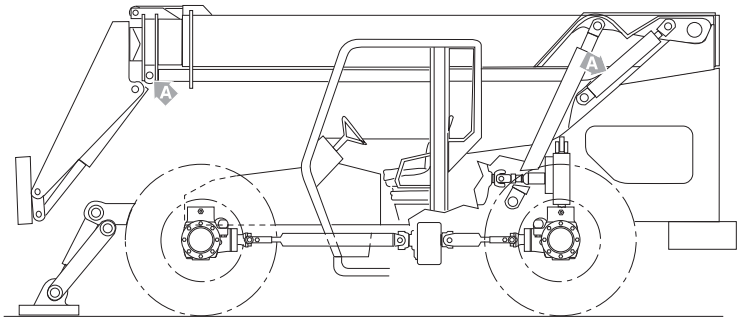

OH4181

https://truckmanualshub.com/

7.5 OPERATOR MAINTENANCE INSTRUCTIONS

Fuel System

A. Fuel Level Check

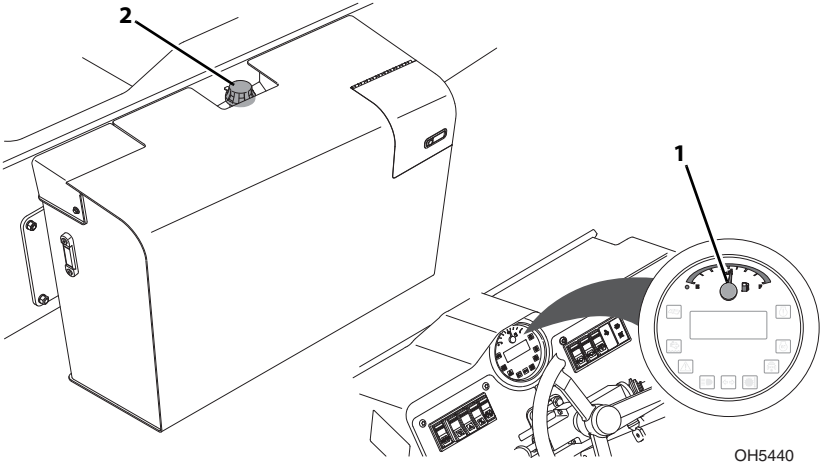

1. Check fuel gauge (**1**) located on instrument cluster in cab.
2. If fuel is low, proceed to fuel source and perform *"Shut-Down Procedure"* on page 4-3.
3. Turn fuel tank cap (**2**) and remove from filler neck.
4. Add fuel as needed.
5. Replace and secure fuel tank cap.

Note: *Replenish fuel at end of each work shift to minimize condensation.*

NOTICE

EQUIPMENT DAMAGE. Do not allow machine to run out of fuel during operation. See Engine Operation & Maintenance Manual for details prior to servicing.

https://truckmanualshub.com/

B. Drain Fuel/Water Separator

10 OW0970 OW1000

IF EQUIPPED FOR ULS

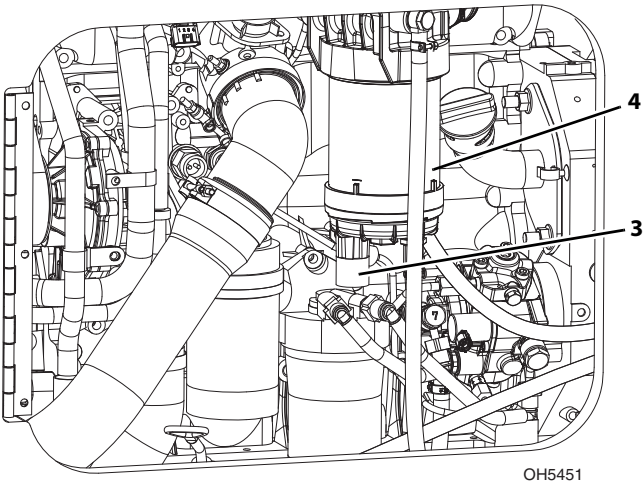

IF EQUIPPED FOR LS

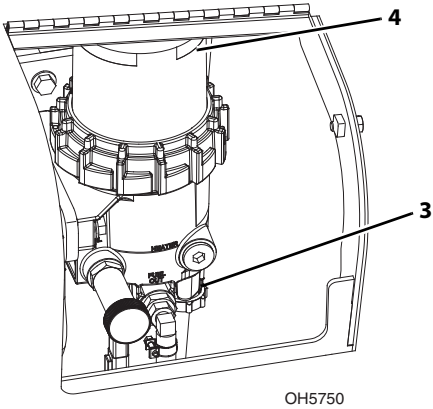

1. Perform *"Shut-Down Procedure"* on page 4-3.
2. Open engine access door.
3. Loosen drain cock (**3**) on underside of fuel filter (**4**) and allow all water to drain into a glass until clear fuel is visible.
4. Tighten drain cock.
5. Close and secure engine access door.

https://truckmanualshub.com/

Diesel Exhaust Fluid (DEF) System (if equipped for ULS/85 or 110HP)

A. DEF Level Check

10 OW0970 OD1350

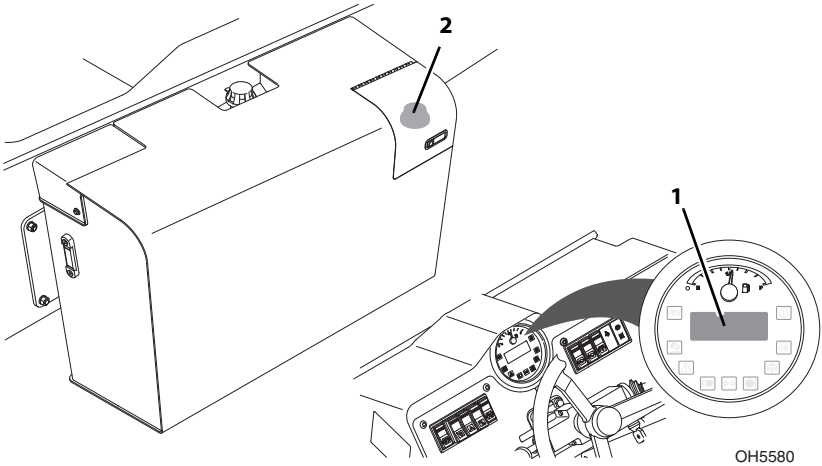

1. Check DEF level (**1**) located on instrument cluster in cab.
2. If DEF is low, proceed to DEF source and perform *"Shut-Down Procedure"* on page 4-3.
3. Turn DEF tank cap (**2**) and remove from filler neck.
4. Add DEF as needed.
5. Replace and secure DEF tank cap.

Note: *(SN 0160082087 to Present) If DEF tank assembly is still under warranty, contact Cummins prior to servicing.*

NOTICE

EQUIPMENT DAMAGE. Do not allow machine to run out of DEF during operation. See Engine Operation & Maintenance Manual for details prior to servicing.

https://truckmanualshub.com/

Engine Oil

A. Engine Oil Level Check

10 OW0970 OW1020

IF EQUIPPED FOR ULS

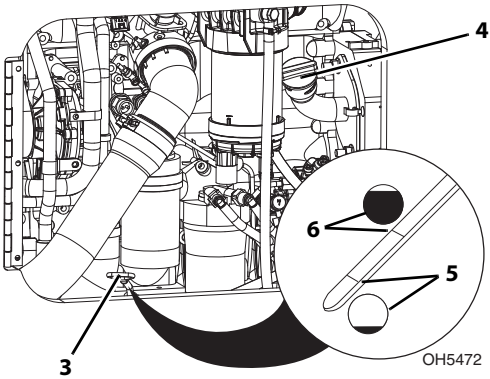

IF EQUIPPED FOR LS

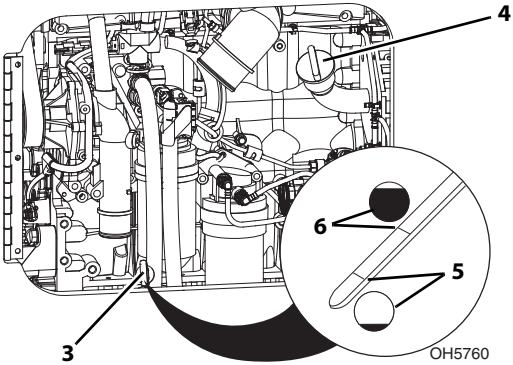

1. Perform *"Shut-Down Procedure"* on page 4-3.
2. Open engine access door.
3. Remove dipstick (**3**) and check oil mark. The oil should be between the full (**6**) and add (**5**) marks within the crosshatched area of the dipstick.
4. If oil is low, remove oil fill cap (**4**) and add motor oil to bring oil up to the full mark in the crosshatch area.
5. Replace oil fill cap and dipstick.
6. Close and secure engine access door.

https://truckmanualshub.com/

Air Intake System

If Equipped for ULS

A. Air Cleaner Check

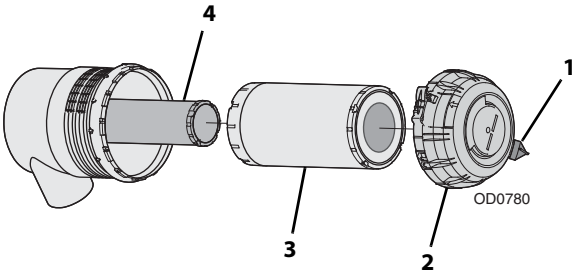

1. Perform *"Shut-Down Procedure"* on page 4-3.
2. Open engine access door.
3. Remove dust from vacuator valve (**1**) by squeezing bottom of valve to allow loose particles to fall out.
4. Close and secure engine access door.

NOTICE

EQUIPMENT DAMAGE. Only remove air cleaner cover to service elements. Excessive access to check elements can lead to premature element and/or engine failure.

https://truckmanualshub.com/

B. Restriction Fault Code

1. Fault Code 107:15 indicates restricted air filter.
2. Primary element (**3**) must be replaced.

C. Element Change

Note: *Change elements as restriction fault code indicates or every two years. Use the interval that occurs first.*

1. Perform *"Shut-Down Procedure"* on page 4-3.
2. Open engine access door.
3. Unlock air cleaner cover (**2**) and remove from air cleaner.
4. Remove outer primary element (**3**). Inspect element for damage then discard.
5. Thoroughly clean interior of air cleaner canister and vacuator valve.
6. Replace inner safety element (**4**) every third primary element change or if primary element was found to be damaged. If replacing inner safety element at this time, carefully slide element out and replace with new element.
7. Slide new primary element over inner safety element making sure sealing edge is flush with base of air cleaner.
8. Position air cleaner cover in place and lock into position.
9. Close and secure engine access door.

Note: *Elements should never be washed or reused. Always install new elements.*

NOTICE

EQUIPMENT DAMAGE. Primary and safety elements are required to be replaced if used in an application longer than two years regardless of hours of operation.

https://truckmanualshub.com/

If Equipped for LS

A. Air Cleaner Check

10 OW0970 OW1010

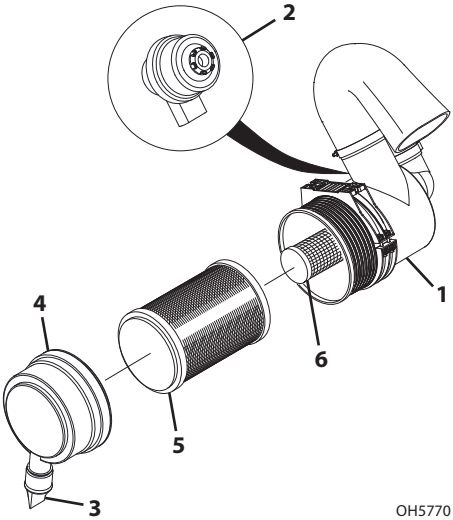

1. Perform *"Shut-Down Procedure"* on page 4-3.
2. Open engine access door.
3. Locate air cleaner (**1**) and check restriction indicator (**2**). If red band is visible, element(s) must be replaced.
4. Remove dust from vacuator valve (**3**) by squeezing bottom of valve to allow loose particles to fall out.
5. Close and secure engine access door.

NOTICE

EQUIPMENT DAMAGE. Only remove air cleaner cover to service elements. Excessive access to check elements can lead to premature element and/or engine failure.

https://truckmanualshub.com/

B. Restriction Fault Code

1. Fault Code 107:15 indicates restricted air filter.
2. Primary element (**5**) must be replaced.

C. Element Change (as restriction indicator or fault code indicates)

Note: *Change elements as air cleaner restriction indicator or restriction fault code indicates or every two years. Use the interval that occurs first.*

1. Perform *"Shut-Down Procedure"* on page 4-3.
2. Open engine access door.
3. Unlock air cleaner cover (**4**) and remove from air cleaner.
4. Remove outer primary element (**5**). Inspect element for damage then discard.
5. Thoroughly clean interior of air cleaner canister and vacuator valve.
6. Replace inner safety element (**6**) every third primary element change or if primary element was found to be damaged. If replacing inner safety element at this time, carefully slide element out and replace with new element.
7. Slide new primary element over inner safety element making sure the sealing edge is flush with the base of the air cleaner.
8. Position air cleaner cover in place and lock into position.
9. Depress button on restriction indicator to reset.
10. Close and secure engine access door.

Note: *Elements should never be washed or reused. Always install new elements.*

NOTICE

EQUIPMENT DAMAGE. Primary and safety elements are required to be replaced if used in an application longer than two years regardless of hours of operation.

https://truckmanualshub.com/

Hydraulic Oil

A. Hydraulic Oil Level Check

10 OW0970 OW1030

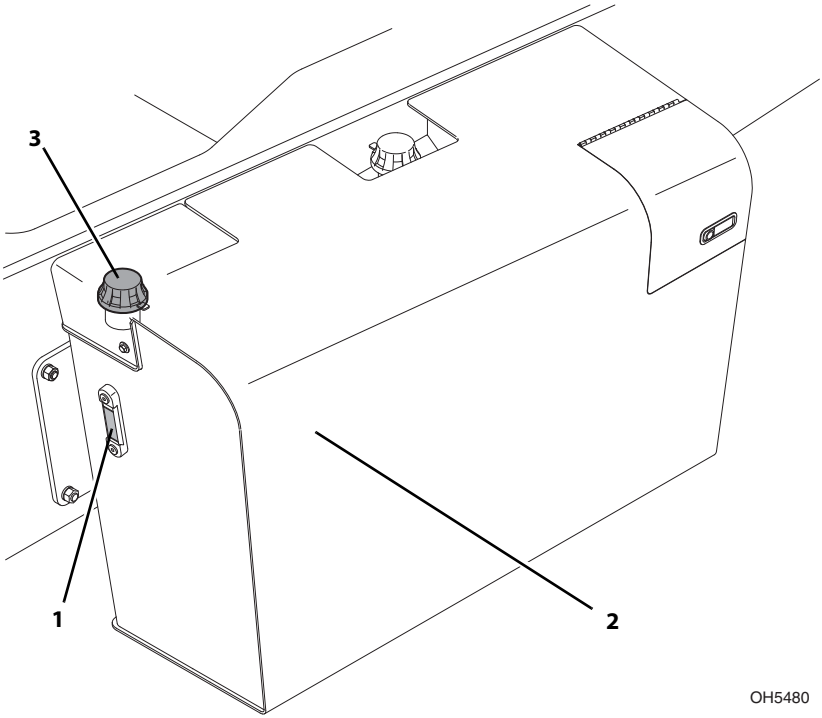

1. Be sure all cylinders are fully retracted and machine is level.
2. Perform *"Shut-Down Procedure"* on page 4-3.
3. Check level of hydraulic oil at the sight gauge (**1**) on the hydraulic tank (**2**). The oil level should be visible in the gauge window.
4. If hydraulic oil is low remove tank cover.
5. Remove oil fill cap (**3**) from filler neck. Add hydraulic fluid to bring oil up to the upper mark on the sight gauge.
6. Replace hydraulic oil fill cap.
7. Replace and secure tank cover.

https://truckmanualshub.com/

Tires

A. Tire Air Pressure Check

10 OW0970 OW1040

1. Perform *"Shut-Down Procedure"* on page 4-3.
2. Remove valve stem cap.
3. Check tire pressure.
4. Add air if required. See page 9-6 for tire pressures.
5. Replace valve stem cap.

B. Tire Damage

For pneumatic tires, when any cut, rip or tear is discovered that exposes sidewall or tread area cords in the tire, measures be taken to remove the product from service immediately. Arrangements must be made for replacement of the tire or tire assembly.

For polyurethane foam filled tires, when any of the following are discovered, measures must be taken to remove the product from service immediately. Arrangements must be made for replacement of the tire or tire assembly.

- a smooth even cut through the cord piles which exceeds 3 in (7,5 cm) in total length.
- any tears or rips (ragged edges) in the cord plies which exceeds 1 in (2,5 cm) in any direction.
- any punctures which exceed 1 in (2,5 cm) in diameter.

If a tire is damaged but within the above noted criteria, the tire must be inspected daily to ensure the damage has not propagated beyond the allowable criteria.

C. Tire and Wheel Replacement

It is recommended that a replacement tire to be the same size, ply, inflation medium and brand as originally installed. Refer to the appropriate parts manual for ordering information. If not using an approved replacement tire, the replacement tires must have the following characteristics:

- Equal or greater ply/load rating and size of original.
- Tire tread contact width equal or greater than original.
- Wheel diameter, width and offset dimensions equal to the original.
- Approved for the application by the tire manufacturer (including inflation pressure and maximum tire load).

Unless specifically approved by JLG, do not replace a foam filled or ballast filled tire assembly with a pneumatic tire. Due to size variations between tire brands, when selecting and installing a replacement tire ensure both tires on the axle are the same.

https://truckmanualshub.com/

The rims installed have been designed for stability requirements which consist of track width, tire pressure and load capacity. Size changes such as rim width, center piece location, larger or smaller diameter, etc., without written factory recommendations, may result in unsafe condition regarding stability.

D. Wheel Installation

Torque lug nuts after first 50 hours and after each wheel installation.

Note: *If machine is equipped with directional tire assemblies, the wheel and tire assemblies must be installed with the directional tread pattern "arrows" facing in the direction of forward travel.*

1. Start all nuts by hand to prevent cross threading. DO NOT use a lubricant on threads or nuts.
2. Tighten lug nuts in an alternating pattern as indicated in figure. See page 9-6 for torque value.

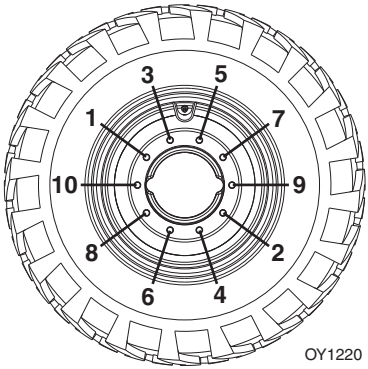

WARNING

TIP OVER HAZARD. Lug nuts must be installed and maintained at the proper torque to prevent loose wheels, broken studs and possible separation of wheel from the axle.

https://truckmanualshub.com/

Transmission Oil

A. Transmission Oil Level Check

10 OW0970 OW1050

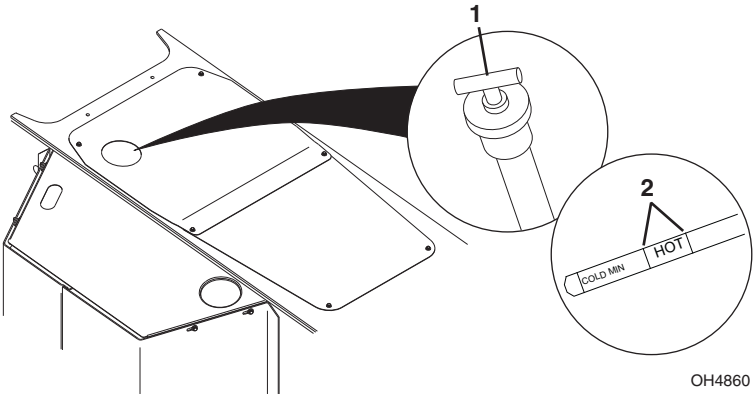

1. Apply park brake, shift transmission to "Neutral" and lower forks or attachment to the ground.
2. Check the transmission oil level with the engine at idle and oil at normal operating temperature.
3. Remove the transmission dipstick (**1**) and check oil level. The oil level should be within the "HOT" zone (**2**).
4. If oil is low, add fluid to bring oil up to the "HOT" zone.
5. Replace transmission dipstick.

https://truckmanualshub.com/

Engine Cooling System

A. Engine Coolant Level Check

10 OW0970 OW1070

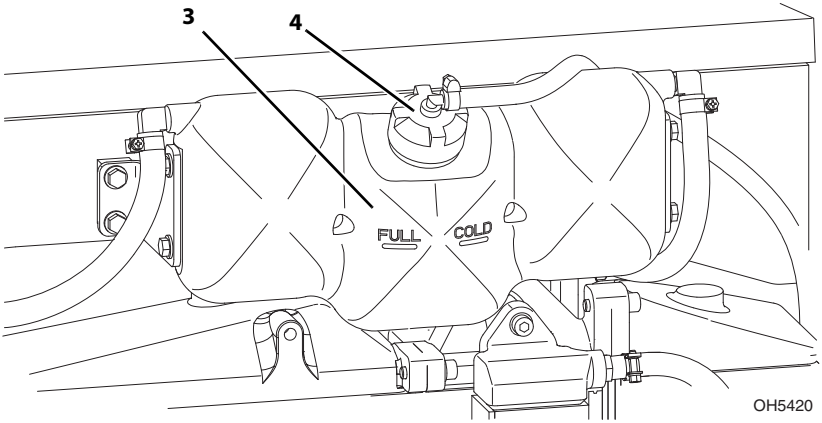

1. Perform *"Shut-Down Procedure"* on page 4-3.
2. Open rear access door.
3. Coolant level should be visible in surge tank (**3**).
4. If coolant is low, allow fluid to cool.
5. Remove surge tank cap (**4**) slowly. Add coolant as required.
6. Replace surge tank cap.
7. Close and secure rear access door.

Note: *When filling coolant, the maximum fill rate is 2.5 gallon per minute (9.5 liter per minute).*

https://truckmanualshub.com/

Brake Fluid (SN 0160074878 to Present)

A. Brake Fluid Level Check

10 OW0970 OD1380

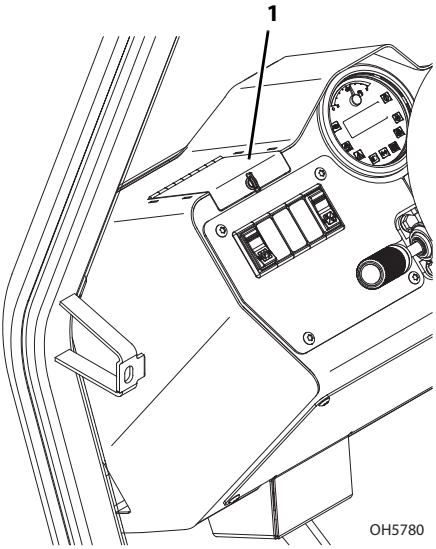

1. Perform *"Shut-Down Procedure"* on page 4-3.
2. Unlock and open access cover (**1**).
3. Check the brake fluid level. Fluid should be between Max and Min marks on brake reservoir.
4. If fluid is low, add fluid as needed.

https://truckmanualshub.com/

Battery

A. Battery Check

50 OW0980 OW1080

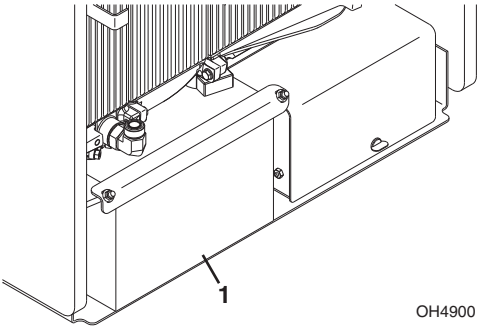

1. Perform *"Shut-Down Procedure"* on page 4-3.
2. Open rear access door.
3. Wearing eye protection, visually inspect the battery (**1**). Check terminals for corrosion. Replace battery if it has a cracked, melted or damaged case.
4. Close and secure rear access door.

https://truckmanualshub.com/

SECTION 8 - ADDITIONAL CHECKS

8.1 STABIL-TRAK (6042, 8042, 10042 & 10054)

A. Stabil-Trak Indicator Test

10 OW0970 OH4340

Stabil-Trak system operates in three modes. In locked mode the indicator light illuminates. If indicator does not illuminate the test was not performed properly or Stabil-Trak system is not functioning correctly and the test should be stopped immediately. To check the indicator, perform the following:

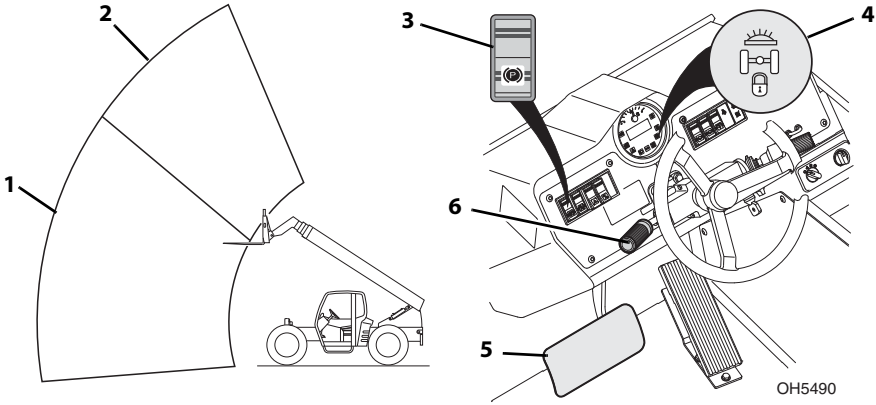

1. Test Stabil-Trak system on a level surface and boom fully retracted, no load.
2. Shift transmission to neutral (**6**).
3. Raise boom above 40° (**2**). Stabil-Trak system locked mode will be activated and indicator (**4**) will illuminate.
4. Lower boom below 40° (**1**).
5. Depress service brake pedal (**5**) and shift transmission into forward.
6. Raise the boom above 40°. Stabil-Trak system locked mode will be activated and indicator will illuminate.
7. Lower boom below 40°.
8. Engage park brake switch (**3**).
9. Release service brake pedal.
10. Raise the boom above 40°. Stabil-Trak system locked mode will be activated and indicator will illuminate.
11. Lower boom below 40°.
12. Shift transmission to neutral.

https://truckmanualshub.com/

8.2 BOOM/OUTRIGGER INTERLOCK (10054)

A. Boom/Outrigger Interlock System Test

10
OW0970

Boom/Outrigger Interlock system operates in two modes. In extend interlock mode, with outriggers raised, a sensor in the boom will stop boom from extending past a point between the “E” and “F” extension indicators. In outrigger interlock mode, with outriggers lowered, boom will extend fully and Stabil-Trak indicator will illuminate. To check the sensor and indicator, perform the following:

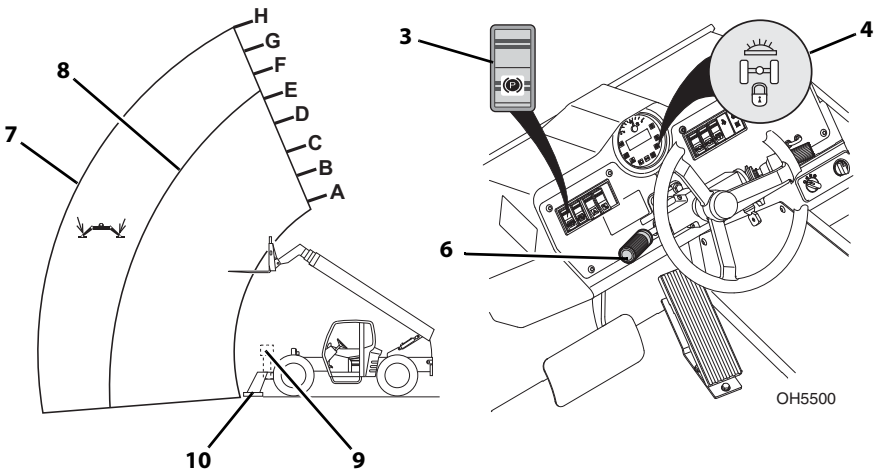

1. Test Boom/Outrigger Interlock system on a level surface and boom horizontal, no load.
2. Shift transmission to neutral (**6**) and engage park brake (**3**).
3. Raise outriggers (**9**).
4. Extend boom until it stops. Boom will stop at a point (**8**) between the “E” and “F” extension indicators.
5. Retract boom.
6. Lower outriggers (**10**) on firm terrain.
7. Extend boom (**7**) until it stops. Boom will fully extend and Stabil-Trak indicator (**4**) will illuminate.

https://truckmanualshub.com/

8.3 REVERSE SENSING SYSTEM (IF EQUIPPED)

A. Reverse Sensing System Check

10
OW0970

Reverse Sensing System provides audible indication of objects to rear of unit while in reverse gear.

1. Clear all people and/or obstacles behind machine before performing Reverse Sensing System check.
2. Start machine and depress and hold brake. Place machine in reverse gear.
3. Verify alarm sounds upon system start up.

Note: *Reverse Sensing System detects objects of size more than 36 square inches (232.25 square centimeters) area and is functional when machine is moving in reverse direction.*

Note: *The use of a construction cone or similar object must be used to test the Reverse Sensing System.*

WARNING

CRUSH HAZARD. Do not use a person to test the reverse sensing system.

4. Verify operation with no objects in detection zone. No audible alarm.
5. Verify operation when object is in range of approximately 9 to 15 ft (2.7 to 4.5 m). Produces pulsing audible alarm at a frequency of one per second (1 Hz).
6. Verify operation when object is in range of approximately 7 to 9 ft (2.1 to 2.7 m). Produces pulsing audible alarm. Produces pulsing audible alarm at a frequency of two per second (2 Hz).
7. Verify operation when object is range of approximately 5 to 7 ft (1.5 to 2.1 m) Produces pulsing audible alarm at a frequency of four per second (4 Hz).
8. Verify operation when object is under approximately 5 ft (1.5 m) from machine. Produces pulsing audible alarm at a frequency of eight per second (8 Hz).

https://truckmanualshub.com/

This Page Intentionally Left Blank

https://truckmanualshub.com/

Section 9 - Specifications

9.1 Product Specifications

Fluids

If Equipped for ULS

Compartment or System	Type and Classification	Viscosities	Ambient Temperature Range			
			°F		°C	
			Min	Max	Min	Max
Engine Crankcase	API CJ-4 Plus CES-20081 Fully Synthetic**	SAE 5W-40	-12	114	-24	45
		SAE 15W-40	15	114	-10	45
		SAE 10W-30	10	104	-12	40
		SAE 5W-30	-12	104	-24	40
		SAE 0W-30	-20	104	-29	40
Transmission and Transfer Case	MobilFluid 424	10W-30	15	114	-10	45
	Mobilfluid LT	75W-80	-20	15	-29	-10
Axle Differential and Wheel End	MobilFluid 424*	10W-30	15	114	-10	45
	Mobilfluid LT*	75W-80	-20	15	-29	-10
	API GL4 with LS Additives or API GL5 with LS Additives	75W-90	-20	114	-29	45
Hydraulic System	MobilFluid 424	10W-30	15	114	-10	45
	Exxon Univis HVI		-20	114	-29	45
Boom Wear Pad Grease	Mystik Tetrimoly	NLGI Grade 2	-4	104	-20	40
Grease Fittings	Extreme Pressure Grease	NLGI Grade 2 EP or NLGI Grade 3 EP with Moly Additive	5	114	-15	45
Boom Chain Lubricant	Gear Oil	80W-90	-20	114	-29	45
Engine Coolant	Ethylene Glycol and Water	50/50 Mix	Standard			
		60/40 Mix	Cold Weather			
Fuel	EN590 ASTM D 975 Grade 1-D ASTM D 975 Grade 2-D (Maximum B5 Biodiesel	Ultra Low Sulfur (S ≤ 15 mg/kg)				

https://truckmanualshub.com/

Compartment or System	Type and Classification	Viscosities	Ambient Temperature Range			
			°F		°C	
			Min	Max	Min	Max
Diesel Exhaust Fluid (DEF) (85 or 110HP)	ISO22241-1	32.5% Urea				
Brake Fluid (SN 0160074878 to Present)	Mobil ATF-D/M		-20	114	-29	45
Air Conditioning	Refrigerant R-134a	Tetrafluoroethane				

**Friction Modifier may be added to axle differentials when replacing fluid. Must be pre-mixed with axle fluid.*
***See Note on page 7-6 for details.*

https://truckmanualshub.com/

If Equipped for LS

Compartment or System	Type and Classification	Viscosities	Ambient Temperature Range			
			°F		°C	
			Min	Max	Min	Max
Engine Crankcase	API CI-4 Multigrade CES-20078	SAE 5W-40	-12	114	-24	45
		SAE 15W-40	15	114	-10	45
		SAE 10W-30	10	104	-12	40
		SAE 5W-30	-12	104	-24	40
		SAE 0W-30	-20	104	-29	40
Transmission and Transfer Case	MobilFluid 424	10W-30	15	114	-10	45
	Mobilfluid LT	75W-80	-20	15	-29	-10
Axle Differential and Wheel End	MobilFluid 424*	10W-30	15	114	-10	45
	Mobilfluid LT*	75W-80	-20	15	-29	-10
	API GL4 with LS Additives or API GL5 with LS Additives	75W-90	-20	114	-29	45
Hydraulic System	MobilFluid 424	10W-30	15	114	-10	45
	Exxon Univis HVI		-20	114	-29	45
Boom Wear Pad Grease	Mystik Tetrimoly	NLGI Grade 2	-4	104	-20	40
Grease Fittings	Extreme Pressure Grease	NLGI Grade 2 EP or NLGI Grade 3 EP with Moly Additive	5	114	-15	45
Boom Chain Lubricant	Gear Oil	80W-90	-20	114	-29	45
Engine Coolant	Ethylene Glycol and Water	50/50 Mix	Standard			
		60/40 Mix	Cold Weather			
Fuel	EN590 ASTM D 975 Grade 1-D ASTM D 975 Grade 2-D (Maximum B5 Biodiesel	Low Sulfur (S ≤ 500mg/kg)				
Brake Fluid (SN 0160074878 to Present)	Mobil ATF-D/M		-20	114	-29	45
Air Conditioning	Refrigerant R-134a	Tetrafluoroethane				

**Friction Modifier may be added to axle differentials when replacing fluid. Must be pre-mixed with axle fluid.*

https://truckmanualshub.com/

Capacities

Engine Crankcase Oil

Capacity with Filter Change ..... 12.7 qt (12 L)

Fuel Tank

Capacity ..... 35 gal (133 L)

DEF Tank (if equipped for ULS/85 or 110HP)

Capacity ..... 5 gal (19 L)

Cooling System

System Capacity ..... 5 gal (19 L)

Hydraulic System

System Capacity
- 6036 & 6042 ..... 45 gal (170 L)
- 8042 ..... 46 gal (174 L)
- 10042 & 10054 ..... 52 gal (197 L)

Reservoir Capacity to Full Mark ..... 20.2 gal (76,5 L)

Transmission

Capacity with Filter Change ..... 12.5 qt (11,8 L)

Axles

Differential Housing Capacity
- 6036 & 6042
  - if utilizing fluid with LS Additives ..... 6.6 qt (6,2 L)
  - if utilizing fluid without LS Additives* ..... 6.3 qt (6,0 L)
- 8042, 10042 & 10054
  - Front Axle
    - if utilizing fluid with LS Additives ..... 12.5 qt (11,8 L)
    - if utilizing fluid without LS Additives* ..... 11.9 qt (11,3 L)
  - Rear Axle
    - if utilizing fluid with LS Additives ..... 12.7 qt (12,0 L)
    - if utilizing fluid without LS Additives* ..... 12.1 qt (11,5 L)

**If axle fluid does not contain LS Additives, Friction Modifier may be added when replacing fluid. Pre-mix before placing in axle differential. Not pre-mixing fluids can lead to excessive brake noise.*

Friction Modifier (if needed)
- 6036 & 6042 ..... 10.6 oz (314 mL)
- 8042, 10042 & 10054
  - Front Axle ..... 20.0 oz (592 mL)
  - Rear Axle ..... 20.3 oz (600 mL)

Wheel End Capacity
- 6036 & 6042 ..... 1.9 qt (1,8 L)
- 8042, 10042 & 10054 ..... 2.2 qt (2,1 L)

https://truckmanualshub.com/

Brake System (SN 0160074878 to Present)

Capacity ..... 0.8 qt (0,8 L)

Window Washer Bottle (if equipped)

Capacity ..... 2.2 qt (2,1 L)

Air Conditioning System (if equipped)

Capacity ..... 1.9 lb (0.86 kg)

https://truckmanualshub.com/

Tires

6036

13.00 x 24, G-2/L-2 Bias Ply Traction - 12 ply
- Pneumatic ..... 55 psi (3,8 bar)
- Foam ..... Approx 542 lb (246 kg)

15.50 x 25, G-2/L-2 Bias Ply Traction - 12 Ply
- Pneumatic ..... 55 psi (3,8 bar)
- Foam ..... Approx 600 lb (272 kg)

370/75-28, 14 Ply
- Pneumatic ..... 76 psi (5,2 bar)
- Foam ..... Approx 464 lb (210 kg)

6042

13.00 x 24, G-2/L-2 Bias Ply Traction - 12 ply
- Pneumatic ..... 70 psi (4,8 bar)
- Foam ..... Approx 542 lb (246 kg)

15.50 x 25, G-2/L-2 Bias Ply Traction - 12 Ply
- Pneumatic ..... 65 psi (4,5 bar)
- Foam ..... Approx 600 lb (272 kg)

370/75-28, 14 Ply
- Pneumatic ..... 76 psi (5,2 bar)
- Foam ..... Approx 464 lb (210 kg)

8042

15.50 x 25, G-2/L-2 Bias Ply Traction - 12 Ply
- Pneumatic ..... 70 psi (4,8 bar)
- Foam ..... Approx 600 lb (272 kg)

370/75-28, 14 Ply
- Pneumatic ..... 76 psi (5,2 bar)
- Foam ..... Approx 464 lb (210 kg)

10042 & 10054

17.50 x 25, G-2/L-2 Bias Ply Traction - 12 ply
- Pneumatic ..... 60 psi (4,1 bar)
- Foam ..... Approx 785 lb (356 kg)

400/75-28, 16 Ply
- Pneumatic ..... 76 psi (5,2 bar)
- Foam ..... Approx 570 lb (259 kg)

Wheel Lug Nut

Torque ..... 350–400 lb-ft (474–542 Nm)

https://truckmanualshub.com/

Performance

Maximum Lift Capacity
- 6036 & 6042 ..... 6,000 lb (2 722 kg)
- 8042 ..... 8,000 lb (3 629 kg)
- 10042 & 10054 ..... 10,000 lb (4 536 kg)

Maximum Lift Height
- 6036 ..... 36 ft (11,0 m)
- 6042, 8042 & 10042 ..... 42 ft (12,8 m)
- 10054 ..... 53.2 ft (16,2 m)

Capacity at Maximum Height
- 6036, 6042, 8042 & 10042 ..... 6,000 lb (2 722 kg)
- 10054 ..... 4,000 lb (1 814 kg)

Maximum Forward Reach
- 6036 ..... 22.3 ft (6,8 m)
- 6042 ..... 27.9 ft (8,5 m)
- 8042 ..... 26.6 ft (8,1 m)
- 10042 ..... 26.5 ft (8,1 m)
- 10054
  - Outriggers Engaged ..... 38.8 ft (11,8 m)
  - Outriggers Not Engaged ..... 26.5 ft (8,1 m)

Capacity at Maximum Forward Reach
- 6036 ..... 1,800 lb (816 kg)
- 6042 ..... 1,400 lb (635 kg)
- 8042 ..... 2,200 lb (998 kg)
- 10042
  - Outriggers Engaged ..... 6,000 lb (2 722 kg)
  - Outriggers Not Engaged ..... 2,000 lb (907 kg)
- 10054
  - Outriggers Engaged ..... 3,000 lb (1 361 kg)
  - Outriggers Not Engaged ..... 1,400 lb (635 kg)

Reach at Maximum Height
- 6036 ..... 5.1 ft (1,6 m)
- 6042 ..... 6.3 ft (1,9 m)
- 8042 ..... 4.8 ft (1,5 m)
- 10042 ..... 4.7 ft (1,4 m)
- 10054 ..... 9.4 ft (2,9 m)

Auxiliary Hydraulic Circuit Max Flow ..... 25 gpm (94,6 lpm)

Maximum Travel Speed
- 6036 ..... 21.4 mph (34 kph)
- 6042 ..... 20.1 mph (32 kph)
- 8042 ..... 19.9 mph (32 kph)
- 10042 & 10054 ..... 20.5 mph (33 kph)

https://truckmanualshub.com/

Hitch Capacity (no load on attachment)
- 6036 & 6042 ..... 6,000 lb (2 722 kg)
- 8042 ..... 8,000 lb (3 629 kg)
- 10042 & 10054 ..... 10,000 lb (4 536 kg)

Frame Leveling ..... 10 degrees

Maximum Travel Grade
- Gradeability ..... 24 degrees (45%)
- Side Slope ..... 5 degrees (8.75%)

https://truckmanualshub.com/

Dimensions

Overall Height
- 6036 ..... 100 in (2 540 mm)
- 6042 ..... 102 in (2 591 mm)
- 8042 ..... 99.4 in (2 525 mm)
- 10042 & 10054 ..... 100.1 in (2 543 mm)

Overall Width
- 6036 & 6042 ..... 99 in (2 515 mm)
- 8042 ..... 99.2 in (2 520 mm)
- 10042 & 10054
  - Outriggers Not Engaged ..... 102 in (2 591 mm)
  - Outriggers Engaged ..... 156.8 in (3 981 mm)

Track Width
- 6036 & 6042 ..... 85 in (2 159 mm)
- 8042 ..... 84 in (2 134 mm)
- 10042 & 10054 ..... 84.2 in (2 139 mm)

Wheelbase
- 6036 & 6042 ..... 113 in (2 870 mm)
- 8042, 10042 & 10054 ..... 119.5 in (3 035 mm)

Overall Length (no attachment)
- 6036 ..... 224 in (5 690 mm)
- 6042 ..... 234 in (5 944 mm)
- 8042 ..... 228 in (5 791 mm)
- 10042 ..... 248 in (6 299 mm)
- 10054 ..... 252 in (6 401 mm)

Ground Clearance
- 6036 & 6042 ..... 14.5 in (368 mm)
- 8042 ..... 17.5 in (445 mm)
- 10042 & 10054 ..... 18 in (457 mm)

Turning Radius (Curb to Curb)
- 6036 & 10054 ..... 165 in (4 191 mm)
- 6042 ..... 168 in (4 267 mm)
- 8042 ..... 156 in (3 962 mm)
- 10042 ..... 170 in (4 318 mm)

Turning Radius (Clearance)
- 6036 & 6042 ..... 151 in (3 835 mm)
- 8042 ..... 156 in (3 962 mm)
- 10042 ..... 176 in (4 470 mm)
- 10054 ..... 174 in (4 420 mm)

https://truckmanualshub.com/

Maximum Operating Weight (no attachment)

6036	23,550 lb (10 682 kg)
6042	27,400 lb (12 428 kg)
8042	28,500 lb (12 927 kg)
10042	30,150 lb (13 676 kg)
10054	31,500 lb (14 288 kg)

Distribution of Maximum Operating Weight
(no attachment, boom level and fully retracted)

Front Axle

6036	7,530 lb (3 416 kg)
6042	8,477 lb (3 845 kg)
8042	8,674 lb (3 935 kg)
10042	10,300 lb (4 672 kg)
10054	10,534 lb (4 778 kg)

Rear Axle

6036	16,020 lb (7 267 kg)
6042	18,923 lb (8 583 kg)
8042	19,826 lb (8 993 kg)
10042	19,850 lb (9 004 kg)
10054	20,966 lb (9 510 kg)

https://truckmanualshub.com/

Maximum Ground Bearing Pressure
- 6036
  - 13.00 x 24
    - Air Filled ..... 136 lb/in^2 (9,6 kg/cm^2)
    - Foam Filled ..... 177 lb/in^2 (12,4 kg/cm^2)
    - Solid ..... 204 lb/in^2 (14,3 kg/cm^2)
  - 15.50 x 25
    - Air Filled ..... 137 lb/in^2 (9,6 kg/cm^2)
    - Foam Filled ..... 178 lb/in^2 (12,5 kg/cm^2)
  - 370/75-28
    - Air Filled ..... 110 lb/in^2 (7,7 kg/cm^2)
    - Foam Filled ..... 144 lb/in^2 (10,1 kg/cm^2)
- 6042
  - 13.00 x 24
    - Air Filled ..... 139 lb/in^2 (9,8 kg/cm^2)
    - Foam Filled ..... 181 lb/in^2 (12,7 kg/cm^2)
    - Solid ..... 229 lb/in^2 (16,1 kg/cm^2)
  - 15.50 x 25
    - Air Filled ..... 143 lb/in^2 (10,1 kg/cm^2)
    - Foam Filled ..... 184 lb/in^2 (12,9 kg/cm^2)
  - 370/75-28
    - Air Filled ..... 113 lb/in^2 (7,9 kg/cm^2)
    - Foam Filled ..... 148 lb/in^2 (10,4 kg/cm^2)
- 8042
  - 13.00 x 24
    - Solid ..... 229 lb/in^2 (16,1 kg/cm^2)
  - 15.50 x 25
    - Air Filled ..... 149 lb/in^2 (10,5 kg/cm^2)
    - Foam Filled ..... 190 lb/in^2 (13,4 kg/cm^2)
  - 370/75-28
    - Air Filled ..... 116 lb/in^2 (8,2 kg/cm^2)
    - Foam Filled ..... 150 lb/in^2 (10,5 kg/cm^2)
- 10042
  - Outriggers ..... 98 lb/in^2 (6,9 kg/cm^2)
  - Tires
    - 14.00 x 24
      - Solid ..... 227 lb/in^2 (16,0 kg/cm^2)
    - 17.50 x 25
      - Air Filled ..... 104 lb/in^2 (7,3 kg/cm^2)
      - Foam Filled ..... 135 lb/in^2 (9,5 kg/cm^2)
    - 400/75-28
      - Air Filled ..... 109 lb/in^2 (7,7 kg/cm^2)
      - Foam Filled ..... 143 lb/in^2 (10,1 kg/cm^2)

https://truckmanualshub.com/

10054

Outriggers ..... 102 lb/in^2 (7,2 kg/cm^2)

Tires

14.00 x 24

Solid ..... 233 lb/in^2 (16,4 kg/cm^2)

17.50 x 25

Air Filled ..... 104 lb/in^2 (7,3 kg/cm^2)

Foam Filled ..... 135 lb/in^2 (9,5 kg/cm^2)

400/75-28

Air Filled ..... 110 lb/in^2 (7,7 kg/cm^2)

Foam Filled ..... 144 lb/in^2 (10,1 kg/cm^2)

https://truckmanualshub.com/

A

Accessory Control Lever 3-16
Additional Checks 8-1
Adjusting/Moving Forks 5-13
After-Treatment System 4-4
Air Cleaner Check 7-18, 7-20
Approved Attachments 5-1
Attachment Installation 5-10
Attachment Operation 5-14
Attachments 5-1
  JLG Supplied 5-2
Automatic Regeneration 4-4
Auxiliary Hydraulic Joystick 3-13
Axles 9-4

B

Battery 7-28
Boom Angle Indicator 3-23
Boom Extension Indicator 3-23
Boom Joystick 3-12
Boom Mounted Lifting Lug 5-50
Boom/Outrigger Interlock System 3-19
  Test 8-2
Brake Fluid 7-27
Bucket 5-34
Bucket—Fork Mounted 5-38

C

Capacities 9-4
Capacity 5-4
Capacity Chart
  Example 5-8
  Sample 5-6
Capacity Indicator Locations 5-5
Carriage w/Forks 5-15
Chemical Hazards 1-14
Controls 3-2
Cooling System 9-4
Coupler Mounted Hook 5-30

D

Dash Controls and Indicators 3-4
Decals
  ANSI 2-4
  ISO 2-7
Diesel Exhaust Fluid (DEF) Level 7-16
Dimensions 9-9
Disengaging a Load 4-8
Disengaging a Suspended Load 4-11
Driving Hazards on Slopes 1-10
Dual Fork Positioning Carriage 5-22

E

Electrical Hazards 1-2
Emergency Exit from Enclosed Cab 6-3
Emergency Lowering of Boom 6-2
Emergency Procedures 6-1
Engine
  Normal Operation 4-3
  Starting 4-1
Engine Coolant Level 7-26
Engine Crankcase Oil 9-4
Engine Oil Level 7-17

F

Fall Hazard 1-13
Fluids 9-1
Fork Extension 5-28
Fork Mounted Hook 5-32
Frame Level Joystick 3-14
Fuel Level 7-14
Fuel Tank 9-4
Fuel/Water Separator 7-15

G

General Maintenance 7-2
Grapple Bucket 5-36

https://truckmanualshub.com/

H

Hazard Classification System 1-1
Hydraulic Oil Level 7-22
Hydraulic Operated Attachment 5-12
Hydraulic System.....9-4

I

Ignition.....3-8
Instrument Cluster 3-6

L

Leveling Procedure.....4-7, 4-10
Lifting Personnel 1-9
Load Falling Hazard.....1-8
Lubrication and Maintenance 7-1
Lubrication Schedule
- 1000 Hour 7-13
- 250 Hour.....7-11
- 50 Hour 7-8

M

Maintenance Schedule
- Every 10 Hours 7-3
- Every 1000 Hours 7-6
- Every 1500 Hours 7-6
- Every 2000 Hours 7-7
- Every 250 Hours.....7-4
- Every 4000 Hours 7-7
- Every 50 Hours 7-4
- Every 500 Hours.....7-5
- Every 5000 Hours 7-7
- Every 750 Hours.....7-5
- First 250 Hours 7-4
- First 50 Hours.....7-3
- First 500 Hours 7-5

Mast Carriage.....5-24
Material Handling Arm.....5-44

O

Operating with a Non-Suspended Load 4-5, 4-6
Operating with a Suspended Load..... 4-9
Operation..... 4-1
Operational Check.....2-12
Operator Cab 2-13
Operator Maintenance Instructions.....7-14
Operator Seat 3-20
Outrigger Switches.....3-15

P

Park Brake 3-9
Parking Procedure 3-9
Performance 9-7
Personnel Work Platform 5-46
Picking Up a Load 4-6
Picking Up a Suspended Load..... 4-9
Pinch Points and Crush Hazards.....1-11
Pipe Grapple 5-26
Placing a Load 4-8
Placing a Suspended Load.....4-11
Pre-Operation Check and Inspection 2-2

R

Reverse Sensing System.....3-24

S

Safety Practices..... 1-1
Safety Signal Words..... 1-1
Seat Belt.....3-22
Shut-Down Procedure..... 4-3
Side Shift Carriage.....5-16
Side Tilt Carriage 5-18
Specifications 9-1
Stabil-Trak System 3-18
- Test..... 8-1

Steer Modes 3-17
Sweeper.....5-48
Swing Carriage.....5-20

https://truckmanualshub.com/

T

Tip Over Hazard....1-4

Tires 7-23, 9-6
- Air Pressure.... 7-23
- Damage 7-23
- Replacement.... 7-23

Towing....6-1

Transmission 9-4

Transmission Control Lever
- Direction of Travel.... 3-10
- Gear Selection 3-11

Transmission Oil Level 7-25

Transport
- Lifting.... 4-13
- Tie Down 4-12

Transporting a Load 4-7

Transporting a Suspended Load.... 4-10

Trash Hopper—Fork Mounted 5-40

Travel Hazard 1-7

Truss Boom 5-42

W

Walk-Around Inspection 2-10

Warm-Up Check.... 2-12

Wheel Installation.... 7-24

Wheel Lug Nut....9-6

Wheel Replacement 7-23

Windows 2-14

https://truckmanualshub.com/

https://truckmanualshub.com/

Serial Number ____________________________________

Date	Comments

https://truckmanualshub.com/

Inspection, Maintenance and Repair Log

Date	Comments

https://truckmanualshub.com/

An Oshkosh Corporation Company

TRANSFER OF OWNERSHIP

To Product Owner:

If you now own but ARE NOT the original purchaser of the product covered by this manual, we would like to know who you are. For the purpose of receiving safety-related bulletins, it is very important to keep JLG Industries, Inc. updated with the current ownership of all JLG products. JLG maintains owner information for each JLG product and uses this information in cases where owner notification is necessary.

Please use this form to provide JLG with updated information with regard to the current ownership of JLG products. Please return completed form to the JLG Product Safety & Reliability Department via facsimile or mail to address as specified below.

Thank You,
Product Safety & Reliability Department
JLG Industries, Inc.
13224 Fountainhead Plaza
Hagerstown, MD 21742
USA
Telephone: +1-717-485-6591
Fax: +1-301-745-3713

NOTE: Leased or rented units should not be included on this form.

Mfg. Model: _____

Serial Number: _____

Previous Owner: _____

Address: _____

_____

Country: _____ ***Telephone:*** _____

Date of Transfer: _____

Current Owner: _____

Address: _____

_____

Country: _____ ***Telephone:*** _____

Who in your organization should we notify?

Name: _____

Title: _____

https://truckmanualshub.com/

https://truckmanualshub.com/

Hand Signals

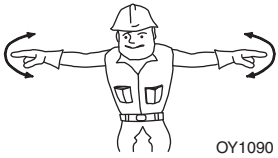 EMERGENCY STOP - With both arms extended laterally, hands open downward, move arms back and forth.	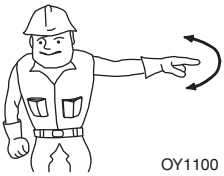 STOP - With either arm extended laterally, hand open downward, move arm back and forth.	STOP ENGINE - Draw thumb or forefinger across throat.
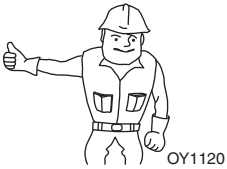 RAISE BOOM - With either arm extended horizontally, fingers closed, point thumb upward.	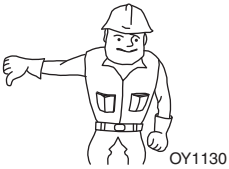 LOWER BOOM - With either arm extended horizontally, fingers closed, point thumb downward.	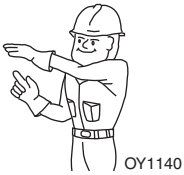 MOVE SLOWLY - Place one hand motionless in front of hand giving motion signal. (Raise load slowly shown)
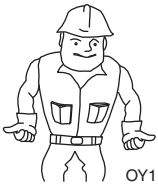 EXTEND BOOM - With both hands clenched, point thumbs outward.	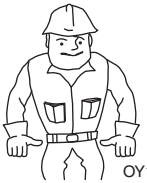 RETRACT BOOM - With both hands clenched, point thumbs inward.	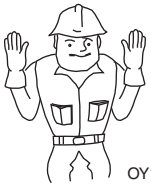 THIS FAR TO GO - With hands raised and open inward, move hands laterally, indicating distance to go.
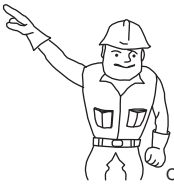 TILT FORKS UP - With one arm held at side, extend other arm upward at about 45 degrees.	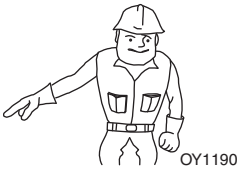 TILT FORKS DOWN - With one arm held at side, extend other arm downward at about 45 degrees.	

Special Signals - When signals for auxiliary equipment functions or conditions not covered are required, they shall be agreed upon in advance by the operator and signalman.

https://truckmanualshub.com/

An Oshkosh Corporation Company

JLG Industries, Inc.
1 JLG Drive
McConnellsburg PA. 17233-9533
USA

(717) 485-5161 (Corporate)
(877) 554-5438 (Service)
(717) 485-6417
www.jlg.com

JLG Worldwide Locations

JLG Industries
358 Park Road
Regents Park
NSW 2143
Sydney 2143
Australia
+6 (12) 87186300
+6 (12) 65813058
Email: techservicesaus@jlg.com

JLG Ground Support Oude
Bunders 1034
Breitwaterstraat 12A
3630 Maasmechelen
Belgium
+32 (0) 89 84 82 26
Email: emeaservice@jlg.com

JLG Latino Americana LTDA
Rua Antonia Martins Luiz, 580
Distrito Industrial Joao Narezzi
Indaiatuba-SP 13347-404
Brasil
+55 (19) 3936 7664 (Parts)
+55(19)3936 9049 (Service)
Email: comercialpecas@jlg.com
Email: servicos@jlg.com

Oshkosh-JLG (Tianjin) Equipment
Technology LTD
Shanghai Branch
No 465 Xiao Nan Road
Feng Xian District
Shanghai 201204
China
+86 (21) 800 819 0050

JLG Industries Dubai
Jafza View
PO Box 262728, LB 19
20th Floor, Office 05
Jebel Ali, Dubai
+971 (0) 4 884 1131
+971 (0) 4 884 7683
Email: emeaservice@jlg.com

JLG France SAS
Z.I. Guillaume Mon Amy
30204 Fauillet
47400 Tonniens
France
+33 (0) 553 84 85 86
+33 (0) 553 84 85 74
Email: pieces@jlg.com

JLG Deutschland GmbH
Max Planck Str. 21
27721 Ritterhude - Ihlpohl
Germany
+49 (0) 421 69350-0
+49 (0) 421 69350-45
Email:german-parts@jlg.com

JLG Equipment Services Ltd.
Rm 1107 Landmark North
39 Lung Sum Avenue
Sheung Shui N. T.
Hong Kong
+(852) 2639 5783
+(852) 2639 5797

JLG Industries (Italia) S.R.L.
Via Po. 22
20010 Pregnana Milanese (MI)
Italy
+39 (0) 2 9359 5210
+39 (0) 2 9359 5211
Email: ricambi@jlg.com

JLG EMEA B.V.
Polaris Avenue 63
2132 JH Hoofdorf
The Netherlands
+31 (0) 23 565 5665
Email: emeaservice@jlg.com

JLG NZ Access Equipment & Services
2B Fisher Cresent
Mt Wellington 1060
Auckland, New Zealand
+6 (12) 87186300
+6 (12) 65813058
Email:techservicesaus@jlg.com

JLG Industries
Vahutinskoe shosse 24b.
Khimki
Moscow Region 141400
Russia Federation
+7 (499) 922 06 99
+7 (499) 922 06 99

Oshkosh-JLG Singapore
Technology Equipment Pte Ltd.
35 Tuas Avenue 2
Jurong Industrial Estate
Singapore 639454
+65 6591 9030
+65 6591 9045
Email: SEA@jlg.com

JLG Iberica S.L.
Trapadella, 2
Pol. Ind. Castellbisbal Sur
08755 Castellbisbal Barcelona
Spain
+34 (0) 93 772 47 00
+34 (0) 93 771 1762
Email:parts_iberica@jlg.com

JLG Sverige AB
Enkopingsvagen 150
176 27 Jarfalla
Sweden
+46 (0) 8 506 595 00
+46 (0) 8 506 595 27
Email: nordicsupport@jlg.com

JLG Industries (UK) Ltd.
Bentley House
Bentley Avenue
Middleton, Greater Manchester
M24 2GP
United Kingdom
+44 (0) 161 654 1000
+44 (0) 161 654 1003
Email: ukparts@jlg.com

31211018