https://truckmanualshub.com/ 1

Schäffer

2428 - 6680 Z

WHEEL LOADERS

Compact power packages in the construction industry

https://truckmanualshub.com/ 2

SCHÄFFER

From 15 kW (20 HP) to 115 kW (157 HP). For over 60 years, we have been developing loaders to meet individual requirements. Customer satisfaction has made us what we are today: One of the most capable and successful suppliers of farm loaders, wheel loaders and tele wheel loaders ever. Every day our employees create new, customised solutions.

Every Schäffer loader is the result of years of experience and innovative thinking. Our products set standards in terms of the highest possible reliability and durability. With lower costs throughout the whole operating life. With even more performance, safety and driving comfort for many years to come.

Schäffer loaders in action:
www.schaeffer.de/en/videos

WHEEL LOADERS BY SCHÄFFER: ADVANTAGES IN THE SMALLEST OF SPACES

All new Schäffer loaders lift relatively heavy loads despite low operating weights. The tipping load of the smallest new type 2428 machine is already more than 1,000 kg. This is made possible by a specially designed front end. It is lower in comparison with the standard machine, thus improving the driver's view of the tool.
The lifting cylinder is stronger. The thicknesses of the swinging fork and supports were also increased to match the performance gains. The lifting height of the new loaders is between 2.30 m and 3.40 m.

The SLT versions of the new machines are also likely to be very interesting. They are characterised by a lower overall height, which is only 1.89 m for the 2428 SLT with an overhead guard. The loaders can thus also drive through very low passages, and are also suitable for use in, e.g., underground car parks. The SLT machines' low centre of gravity results in an even higher tipping load and better stability.

2428 18,5 kW (25 HP)

2430 18,5 kW (25 HP)

2445 33 kW (45 HP)

3450 S 37 kW (50 HP)

2428 SLT 18,5 kW (25 HP)

2445 SLT 33 kW (45 HP)

3450 SLT 37 kW (50 HP)

4670 Z 37,4 kW (51 HP)
48,6 kW (66 HP)

6680 Z 55 kW (75 HP)

https://truckmanualshub.com/ 3

PERFORMANCE

for great application versatility. Every day.

https://truckmanualshub.com/ 4

ADDED VALUE AT A GLANCE

SCHÄFFER 2428 SLT

The perfect combination of performance and safety

The 2428 SLT is in many ways a unique machine. The low centre of gravity allows for a high tipping load with optimum stability. The total height from just 1.89 m and the minimum width of 0.94 m open up operation options that are simply not feasible for larger loaders. This new Schäffer is more than just an equipment carrier – it is a fully-fledged wheel loader.

Very often, the alternative to the 2428 SLT is strenuous manual work – don't let it come to this.

SCHAEFFER.DE/EN/2428SLT

https://truckmanualshub.com/ 5

SCHÄFFER 2428

THE WORKHORSE FOR EVERY DAY

Schäffer loaders increase productivity and are genuinely fun to drive.

The Schäffer 2428 is suitable for operations of all kinds thanks to its perfect combination of performance, driving comfort and reliability. The hydrostatic traction drive delivers high thrust forces coupled with very low fuel consumption.

The machine is very simple and intuitive. The view of the attachments is excellent. The comfortable seating position guarantees relaxed and productive work at all times for the driver.

Schäffer axles – stability and safety guaranteed

Schäffer axles are optimised for each model. The force of the hydrostatic drive is converted into endless thrust. The perfect coordination of the complete drive system helps save fuel.

PERFECTLY DESIGNED

The practical toolbox can be used to keep everything in order. Tools such as grease guns are stored safely and are always within reach.

Electrical fuses can be easily checked and replaced.

The optional rotating beacon is located in a protected position.

The steering column angle is adjustable. This is convenient and also makes getting in and out easier.

The load arm features an elegant and strong design for the toughest of operations.

Additional lamps can be mounted on the overhead guard or cab as required.

https://truckmanualshub.com/ 6

THE POWERHOUSE

The Schäffer 2445 is one of the most powerful loaders in its class. A paving stone pallet weighing 1.6 t can be safely transported with this loader, even in difficult terrain. It is also possible to transport the unit to the next jobsite with a car trailer up to an operating weight of 2.5 t.

The comparatively low ground pressure is another advantage, especially for garden and landscaping work.

The compact power packs feel at home on any jobsite.

The driver has a clear view of the attachments.

Agility is the key!

HTF: MAXIMUM THRUST, EVEN WHEN IN HIGH GEAR

HTF, or 'High Traction Force', automatically regulates the thrust so the loader can supply the highest possible thrust even in a high gear. HTF uses a new axial piston-bent axis motor that regulates speed automatically depending on the traction. This is particularly useful in an uphill position as the driver does not have to switch to first gear.

HTF comes into its own when digging into aggregate material - if more thrust is required, the hydraulic motor adapts automatically, without the driver having to interfere manually. This means most of the work can be done in fast gear, increasing driving comfort and speeding up work. The Schäffer **2430, 2445, 3450 S, 3450 SLT, 4670 Z** and **6680 Z** are equipped and delivered with the HTF-drive as standard.

Benefits:

- Very high thrust forces
- No need to manually shift down a gear when going uphill
- Even at high speed the maximum thrust is always available, e.g. when digging into aggregate material
- Enhanced driving comfort, faster working

https://truckmanualshub.com/ 7

SCHÄFFER 2445

THE VERSATILE ALL-ROUNDER

The 24 series loaders are extremely versatile machines.

Thanks to the order-driven production, each loader can be customised to meet the customer's specific requirements. There is an array of different options to choose from, especially when it comes to hydraulics and tyres.

And a variety of attachments is available on top. They range from a simple bucket to a snow thrower for professional use; this necessitates a sophisticated equipment package on the loader in order to meet the highest requirements.

We are happy to helps you in your choice.

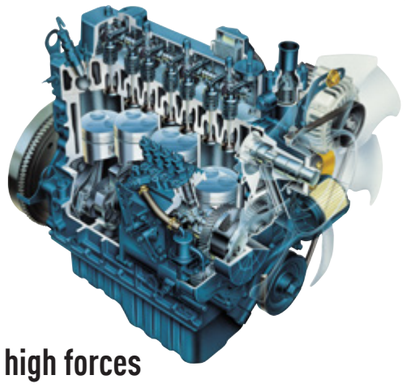

Where high forces make lots of sense...

Kubota is the largest manufacturer of compact diesel engines worldwide. The consumption, smoke and carbon black levels have all been further reduced in the latest-generation engines. And on top of that: any necessary maintenance can be carried out quickly and easily through the wide-opening engine bonnet.

SERIAL HIGHLIGHTS

All service points are easily accessible.

The step significantly facilitates access.

The lifting cylinder has been dimensioned to be particularly strong, thus matching the high tipping load. Swivel-head eyes protect against torsion.

The "SWH" tool holder supports quick coupling and uncoupling of all equipment. Hydraulic locking is standard equipment.

The articulated/swivel joint is maintenance-free and has an extended warranty.

https://truckmanualshub.com/ 8

SCHÄFFER 2445

PERFECT FOR CONSTRUCTION AND LANDSCAPING

A good loader also provides good solutions in detail:

1. Kubota engines are quiet, economical and extremely durable. These engines demonstrate their capabilities millions of times every day at construction sites around the world. It is not without reason that the Japanese manufacturer's products have an excellent reputation across many branches of industry.

2. The cabin offers maximum comfort. Heating is, of course, standard equipment. Thanks to the generous glazing and good all-round visibility, the driver can always keep an eye on everything, and work safely and quickly. Due to the low height and large-sized doors, the driver can climb in and out very easily.

3. Swivelhead eyes on the hydraulic cylinders prevent wear through torsion.

4. A variety of tyre options is available. Tread and tyre widths that match the operating environment are a prerequisite for optimal results. We will gladly provide you with guidance.

5. The lifting cylinder has been dimensioned to be particularly strong, thus matching the high tipping load. Since only one cylinder is provided, the load arm can be built to be fairly lean, thus improving the operator's view of the equipment.

6. Different operations always demand a perfect choice of equipment. Schäffer offers a variety of possibilities. We will do everything possible to solve your problem.

SCHAEFFER.DE/EN/2445

https://truckmanualshub.com/ 9

SCHÄFFER 3450 S

EXACTING REQUIREMENTS NEED (MORE) POWER

Schäffer has the right machine in its portfolio for any performance requirements

The 3450 S loader rounds off the top end of the Schäffer program for the landscape gardening and the construction industries. With a higher tipping load compared with the very successful 2445, the 3450 S has enough power in reserve for the toughest of tasks. Its still very compact dimensions make this machine the ideal workhorse in hard to reach areas. And high traction force and agility guarantee driving pleasure.

SCHAEFFER.DE/EN/3450S

HTF

The 3450 S can move pallets weighing 2.0 tonnes. A narrow and very low front end optimises the driver's view of the attachment.

High traction force boost productivity. And with a lifting height of 2.60 m, convenient loading and unloading - even of larger commercial vehicles - is no longer a problem.

ELECTRONICALLY REGULATED DRIVE FOR HIGHER COMFORT

Our new Kubota motor offers the highest possible torque in its class and is unique in the market of these loaders due to an electronically regulated drive – SPT or 'Schäffer Power Transmission'. The drive is adapted to the torque of the diesel engine for multitude of advantages: operating costs decrease as the diesel fuel consumption is reduced. Hill starts are a lot easier as the start-up assistant helps prevent the vehicle moving backwards.

The optional potentiometer acts as cruise control. The loader keeps a constant speed automatically and independently from the motor speed – especially convenient when working with mulchers or brooms.
Additionally, there are several new safety functions, for example protection from overheating and motor over-revving protection, making working with the loader safer and more reliable. SPT is standard on the Schäffer **2430, 4670 Z** and **6680 Z**.

Benefits:

- Higher efficiency, lower fuel consumption and reduced operating costs
- 'Start up assistant' to make hill starts easier
- Different parameters for different drive characteristics
- Extra safety functions including overheating and over rotation protection to make the loader safer and more reliable
- Optional potentiometer that works to maintain a constant speed regardless of the motor speed. This is particularly useful when working with mulchers or brooms
- Greater agility and more driving fun!

ERGONOMICS AT ITS BEST

Driver comfort was our top priority when designing the cabin of the 4670 Z. A range of features contribute to a very comfortable work environment, so the driver can feel fresh, even after long working days. All operating and control instruments are clearly laid out and user-friendly, and easily accessed from the comfortable seat with impressive legroom. The generous use of glass delivers perfect visibility for working and manoeuvring. The third control circuit is integrated in the joystick, with no need to change the handle to operate the additional control circuit.

Switch bar, electric plug

Multifunctional joystick

https://truckmanualshub.com/ 11

Z-LOADERS FROM SCHÄFFER: POWER IN ACTION

The Schäffer loader 6680 Z completes the Z-Loader range. These again combine compact dimensions with maximum power and ergonomics, ideal for fast and safe handling of bulk goods and the transport of heavy loads. These compact wheel loaders are in their element in narrow operating conditions. The Z-kinematics bring power for lifting and tipping loads. The swinging rear axle provides great stability.

The loaders are equipped with the 'SCV' cab, which is hard to beat in terms of space and ease of operation. The driver works faster and safer thanks to the perfect all-round visibility.

COMPUTER-OPTIMISED ARM WITH Z KINEMATICS – SIMPLY STRONG

Our Z-Loaders feature a computer-optimised arm, designed by experienced Schäffer engineers using 3D CAD technology. Wide and strong enough to support any tool, yet designed to ensure better visibility – it's another example of smart, driver-centred design from Schäffer.

THE SCHÄFFER 6680 Z: ADVANTAGES AT A GLANCE

The SCV-Cab: ROPS and FOPS approved; very spacious, sets standards in terms of ergonomics and all round view. Option available in low version.

Low boom pivot for perfect view.

Z-bar linkage for high break out force.

4-cylinder Deutz Turbo diesel engine: clean, moneysaving, powerful.

CAD optimised loading arm geometry for optimum lifting power and reach; perfect parallel lift.

Versatile due to big range of tools and optional equipment.

Axles in HD version: standard with planetary axle and automatic limited-slip differential. Best thrust through optimal setup of axle, hydrostatic drive and diesel engine. The oscillating rear axle improves the stability by 30%.

Extremly strong articulation joint, maintenance-free.

TECHNICAL DATA

	2428	2430	2445	3450 S
Engine	3 Cyl. Kubota, 18.5 kW (25 HP)	3 Cyl. Kubota, 18.5 kW (25 HP)	4 Cyl. Kubota Turbo, 33 kW (45 HP)	4 Cyl. Kubota, 37 kW (50 HP)
Traction hydraulics	Hydrostatic-automotive	Hydrostatic automotive, HTF (High Traction Force)		
Tyres	27x8.50-15 SKD Option I 27x10.5-15 Option II 26x12.00-12	10.0/75 - 15.3 MPT/SKD/AS Option I 27x10.5-15 Option II 31x15.5-15	10.0/75 - 15.3 MPT/SKD/AS Option I 27x10.5-15 Option II 31x15.5-15	11.5/80 - 15.3 MPT/AS Option I 15.0/55-17 AS Option II 425/55 R17
Service braking system	Hydrostatic and mechanical drum brake	Combined brake hydrostatic and multi-disc brake		
Parking brake	Mechanical drum brake	Multi-disc brake running in oil bath		
Working hydraulics Output/pressure	Delivery rate: 33 l/min Operating pressure: 200 bar	Delivery rate: 42 l/min Operating pressure: 200 bar	Delivery rate: 51 l/min Operating pressure: 200 bar	Delivery rate: 60 l/min Operating pressure: 200 bar
Steering	Fully hydraulic articulated/ swivel steering			
Operating weight	1,820 kg	2,200 kg 2,400 kg with cab	2,450 kg 2,650 kg with cab	3,100 kg 3,300 kg with cab
Lifting capacity	1,700 kg	1,900 kg	1,900 kg	2,200 kg
Tipping load, straight*1 Pallet fork Bucket	 1,046 - 1,222 kg 1,218 - 1,354 kg	 1,272 - 1,521 kg 1,530 - 1,740 kg	 1,710 - 1,912 kg 1,790 - 2,135 kg	 2,040 - 2,120 kg 2,335 - 2,412 kg
Tipping load, articulated*1 Pallet fork Bucket	 850 kg 1,020 kg	 900 kg 1,180 kg	 1,240 kg 1,530 kg	 1,450 kg 1,620 kg
Payload Pallet fork, even ground*2 Pallet fork, uneven ground*2 Bucket*3	 680 kg 510 kg 510 kg	 720 kg 540 kg 590 kg	 992 kg 744 kg 765 kg	 1,160 kg 870 kg 810 kg
Axles	Original Schäffer axles, 5-hole rim	Original Schäffer axles, 6-hole rim	Original Schäffer axles, 6-hole rim; Option: automatic slip-control differential	
Speed	0 - 15 kph	0 - 20 kph	0 - 20 kph in 2 gears switchable under load Option: 0 - 28 kph	0 - 20 kph Option: 0 - 28 kph
Electric system	Operating voltage: 12 V			
Fill quantities	Fuel: 23 l Hydraulic oil: 30 l	Fuel: 40 l Hydraulic oil: 30 l	Fuel: 40 l Hydraulic oil: 30 l	Fuel: 55 l Hydraulic oil: 50 l
Specific gravity of material	1.6 t/m³	1.6 t/m³	1.6 t/m³	1.6 t/m³
Bucket capacity *4	0.32 m³	0.42 m³	0.50 m³	0.55 m³
Recommended bucket width	0.8 m	1.1 m	1.3 m	1.4 m
Sound pressure level LpA	84 dB(A)	85 dB(A)	84 dB(A)	85 dB(A)
Sound power level guaranteed LwA equivalent LwA	 101 dB (A) 98 dB (A)	 101 dB (A) 101 dB (A)	 101 dB (A) 98 dB (A)	 101 dB (A) 100 dB (A)
Hand/arm vibration *5	< 2.5 m/s²	< 2.5 m/s²	< 2.5 m/s²	< 2.5 m/s²
Total body vibration *5	< 0.5 m/s²	< 0.5 m/s²	< 0.5 m/s²	< 0.5 m/s²

*1 according to ISO 8313 *2 according to EN 474-3 *3 according to ISO 14397-1 *4 according to ISO 7546 *5 according to ISO 8041

Tyre dimensions and additional equipment can change the operating weight, tipping load and bucket capacity.

DIMENSIONS

		2428	2430	2445	3450 S
A	Wheelbase [mm]	1,500	1,645	1,755	1,920
B	Chassis length [mm]	3,000	3,140	3,320	3,680
C	Overall length with standard bucket [mm]	3,750	3,830	4,045	4,400
D	Digging depth [mm]	110	105	105	90
E	Max. working height [mm]	2,960	3,230	3,230	3,250
F	Max. bucket pivot point. [mm]	2,300	2,500	2,500	2,600
G	Loading height with pallet forks [mm]	2,150	2,150	2,360	2,500
H	Max. dumping height [mm]	1,450	1,700	1,700	1,800
I	Front end height [mm]	1,360	1,490	1,490	1,550
J	Dumping width [mm]	470	260	260	510
K	Seat height [mm]	1,055	1,190	1,160	1,150
L	Overhead guard height [mm] Cab height [mm]	2,090 -	2,220 2,150	2,215 2,110	2,270 2,230
N	Overall width [mm]	940 - 1,240	1,020 - 1.300	1,020 - 1.570	1,140 - 1.680
O	Inner turning radius [mm]	760	960	1,000	1,100
P	Outer turning radius [mm]	1,800	2,020	2,070	2,120
Q	Outer radius with standard bucket [mm]	2,190	2,310	2,450	2,500

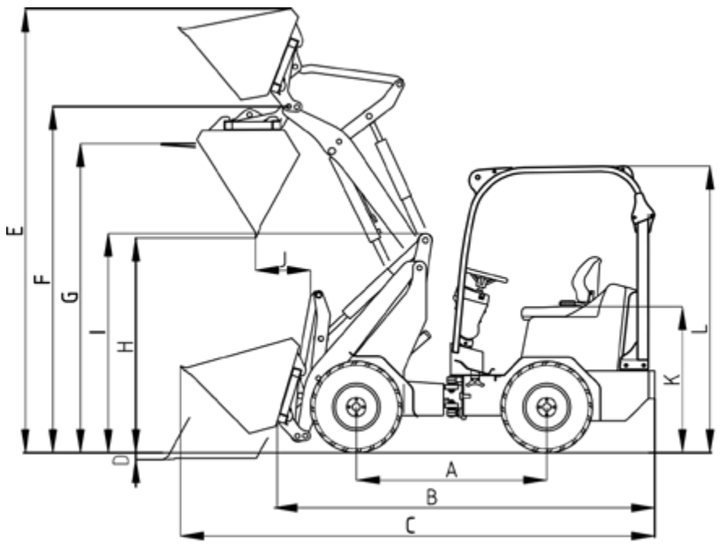

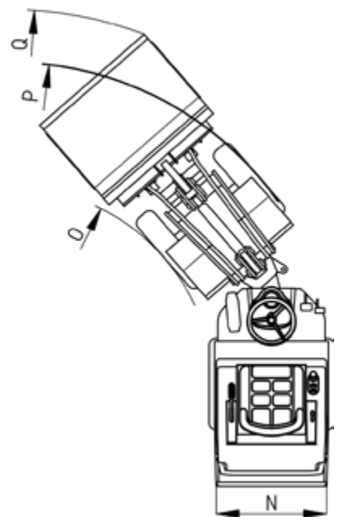

https://truckmanualshub.com/ 13

TECHNICAL DATA

	4670 Z	6680 Z
Engine	4 Cyl. Kubota, 37.4 kW (51 HP) / 48.6 kW (66 HP)	4 Cyl. Deutz Turbo, 55 kW (75 HP)
Exhaust gas treatment	DOC, DPF, Stage V	
Traction hydraulics	Hydrostatic automotive, HTF (High Traction Force)	
Tyres	11.5/80 - 15.3 AS Option I 15.0/55-17 Option II 425/55-17	400/70-20 AS Option I 12.5/50-18 Option II 550/45-22.5
Service braking system	Combined brake hydrostatic and multi-disc brake	
Parking brake	Multi-disc brake running in oil bath	
Working hydraulics Output/pressure	Delivery rate: from 68 l/min Operating pressure: 200 - 210 bar	Delivery rate: from 74 l/min Operating pressure: 200 - 210 bar
Steering	Fully hydraulic articulated/swivel steering	Hydraulic articulated pendulum steering
Operating weight	3,400 kg / 3,520 kg with cab	5,100 kg with cab
Lifting capacity	2,400 kg	3,300 kg
Tipping load, straight*1 Pallet fork Bucket	 1,823 - 2,149 kg 2,120 - 2,428 kg	 3,325 - 3,677 kg 3,751 - 3,918 kg
Tipping load, articulated*1 Pallet fork Bucket	 1,700 kg 1,950 kg	 2,625 kg 3,020 kg
Payload Pallet fork, even ground*2 Pallet fork, uneven ground*2 Bucket*3	 1,136 kg 852 kg 880 kg	 2,100 kg 1,575 kg 1,510 kg
Axles	Original Schäffer axles, 6 wheel nut rim; planetary axle and automatic limited slip brake	HD axles, 8 wheel nut rim; planetary axle and automatic limited slip brake, oscilating rear axle
Speed	0 - 20 kph, 2 speeds gear switching under load possible, Option: 0 - 28 kph	0 - 20 kph, 2 speeds gear switching under load possible, Option: 0 - 35 kph
Electric system	Operating voltage: 12 V	
Fill quantities	Fuel: 90 l Hydraulic oil: 60 l	Fuel: 95 l Hydraulic oil: 85 l
Specific gravity of material	1.6 t/m³	1.6 t/m³
Bucket capacity *4	0.55 m³	1.00 m³
Recommended bucket width	1.3 m	1.9 m
Sound pressure level LpA	85 dB (A)	75.5 dB(A)
Sound power level guaranteed LwA equivalent LwA	 101 dB (A) 100 dB (A)	 101 dB (A) 101 dB (A)
Hand/arm vibration *5	<2.5 m/s²	< 2.5 m/s²
Total body vibration *5	<0.5 m/s²	< 0.5 m/s²

*1 according to ISO 8313 *2 according to EN 474-3 *3 according to ISO 14397-1 *4 according to ISO 7546 *5 according to ISO 8041

Tyre dimensions and additional equipment can change the operating weight, tipping load and bucket capacity.

Availability of Schäffer efficiency systems

	2430	2445	3450 S	3450 SLT	4670 Z	6680 Z
HTF	X	X	X	X	X	X
SPT	X	-	-	-	X	X

DIMENSIONS

		4670 Z	6680 Z
A	Wheelbase [mm]	2,000	2,195
B	Chassis length [mm]	4,080	4,725
C	Overall length with standard bucket [mm]	4,760	5,450
D	Digging depth [mm]	120	120
E	Max. working height [mm]	4,060	4,120
F	Max. bucket pivot point. [mm]	3,260	3,400
G	Loading height with pallet forks [mm]	3,050	3,225
H	Max. dumping height [mm]	2,500	2,700
I	Front end height [mm]	1,570	1,690
J	Dumping width [mm]	640	925
K	Seat height [mm]	1,270	1,420
L	Overhead guard height [mm] Cab height [mm]	2,270 2,270	- 2,630 / 2,460*
N	Overall width [mm]	1,420 - 1,730	1,710 - 2,050
O	Inner turning radius [mm]	1,450	1,750
P	Outer turning radius [mm]	2,680	3,320
Q	Outer radius with standard bucket [mm]	3,010	3,850

* Option: Low cabin

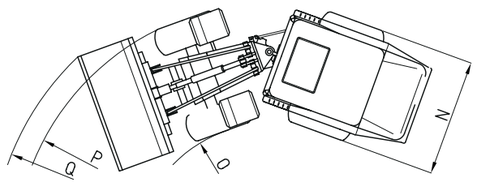

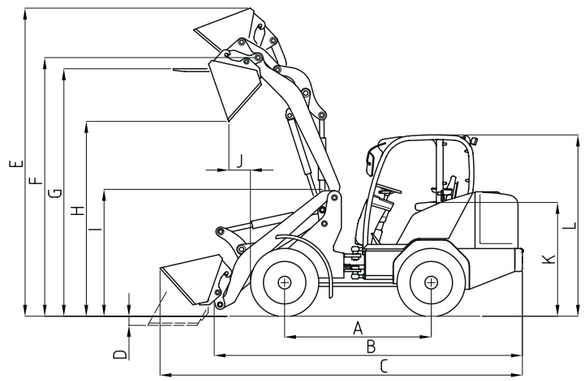

TECHNICAL DATA

	2428 SLT	2445 SLT	3450 SLT
Engine	3 Cyl. Kubota, 18.5 kW (25 HP)	4 Cyl. Kubota Turbo, 33 kW (45 HP)	4 Cyl. Kubota, 37 kW (50 HP)
Traction hydraulics	Hydrostatic-automotive		Hydrostatic automotive, HTF (High Traction Force)
Tyres	27x8.50-15 Option I 27x10.5-15 Option II 26x12.00-12	10.0/75 - 15.3 MPT/SKD/AS Option I 27x10.5-15 Option II 31x15.5-15	11.5/80 - 15.3 MPT/AS Option I 15.0/55-17 AS Option II 425/55 R17
Service braking system	Hydrostatic and mechanical drum brake	Combined brake hydrostatic and multi-disc brake	
Parking brake	Mechanical drum brake	Multi-disc brake running in oil bath	
Working hydraulics Output/pressure	Delivery rate: 33 l/min Operating pressure: 200 bar	Delivery rate: 51 l/min Operating pressure: 200 bar	Delivery rate: 60 l/min Operating pressure: 200 bar
Steering	Fully hydraulic articulated/swivel steering		
Operating weight	1,860 kg 1,960 kg with cab	2,480 kg 2,555 kg with cab	3,100 kg
Lifting capacity	1,700 kg	1,900 kg	2,200 kg
Tipping load, straight*1 Pallet fork Bucket	 1,185 - 1,311 kg 1,550 - 1,663 kg	 1,733 - 1,954 kg 1,820 - 2,135 kg	 2,040 - 2,120 kg 2,335 - 2,412 kg
Tipping load, articulated*1 Pallet fork Bucket	 880 kg 1,170 kg	 1,325 kg 1,550 kg	 1,450 kg 1,620 kg
Payload Pallet fork, even ground*2 Pallet fork, uneven ground*2 Bucket*3	 704 kg 528 kg 585 kg	 1,060 kg 795 kg 775 kg	 1,160 kg 870 kg 810 kg
Axles	Original Schäffer axles, 5-hole rim	Original Schäffer axles, 6-hole rim; Option: automatic slip-control differential	
Speed	0 - 15 kph	0 - 20 kph	0 - 20 kph Option: 0 - 28 kph
Electric system	Operating voltage: 12 V		
Fill quantities	Fuel: 23 l Hydraulic oil: 30 l	Fuel: 40 l Hydraulic oil: 30 l	Fuel: 55 l Hydraulic oil: 50 l
Specific gravity of material	1.6 t/m³	1.6 t/m³	1.6 t/m³
Bucket capacity *4	0.37 m³	0.50 m³	0.55 m³
Recommended bucket width	1.0 m	1.3 m	1.4 m
Sound pressure level LpA	83 dB(A)	83 dB(A)	85 dB(A)
Sound power level guaranteed LwA equivalent LwA	 101 dB (A) 98 dB (A)	 101 dB (A) 98 dB (A)	 101 dB (A) 100 dB (A)
Hand/arm vibration *5	< 2.5 m/s²	< 2.5 m/s²	< 2.5 m/s²
Total body vibration *5	< 0.5 m/s²	< 0.5 m/s²	< 0.5 m/s²

*1 according to ISO 8313 *2 according to EN 474-3 *3 according to ISO 14397-1 *4 according to ISO 7546 *5 according to ISO 8041

Tyre dimensions and additional equipment can change the operating weight, tipping load and bucket capacity.

DIMENSIONS

		2428 SLT	2445 SLT	3450 SLT
A	Wheelbase [mm]	1,700	1,815	1,920
B	Chassis length [mm]	3,200	3,400	3,680
C	Overall length with standard bucket [mm]	3,950	4,200	4,400
D	Digging depth [mm]	110	105	90
E	Max. working height [mm]	2,960	3,230	3,250
F	Max. bucket pivot point. [mm]	2,300	2,500	2,600
G	Loading height with pallet forks [mm]	2,150	2,360	2,500
H	Max. dumping height [mm]	1,450	1,700	1,800
I	Front end height [mm]	1,360	1,480	1,550
J	Dumping width [mm]	470	260	510
K	Seat height [mm]	910	995	1,030
L	Overhead guard height [mm] Cab height [mm]	from 1,890 from 1,890	from 1,950 from 1,950	from 2,050 -
N	Overall width [mm]	940 - 1,240	1,020 - 1,570	1,140 - 1.680
O	Inner turning radius [mm]	850	1,050	1,100
P	Outer turning radius [mm]	1,900	2,170	2,120
Q	Outer radius with standard bucket [mm]	2,510	2,550	2,500

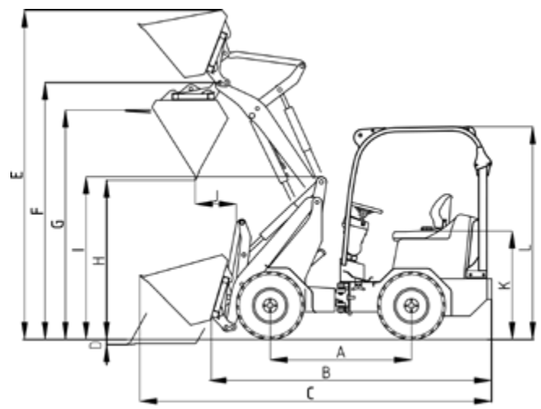

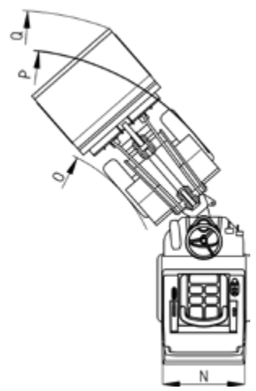

All technical specifications in this prospectus refer to serial models and describe their standard functions. The equipment components and their functions as well as the accessories depend on the individual model and the product options and also on the country and customer specific requirements. Images may contain products or equipment components which are not mentioned or cannot be obtained as a standard. The descriptions, measurements, images, weight specifications and technical data correspond to the state of the art at the time of printing and are non-binding.
We reserve changes in the field of construction, equipment, optics and technology without prior notice, due to the continuous development of the products. In case of doubts concerning the performance or the mode of operation of our products due to special circumstances, we recommend the execution of work samples under controlled conditions. We cannot exclude deviations from images or measurements, calculation errors, printing errors or incompleteness in the prospectus despite all due care. We do therefore not accept any liability for the correctness and completeness of the specifications in this prospectus. We do guarantee the proper functioning of our products within the scope of our General Terms and Conditions. Any guarantees that go beyond these are on principle not provided.
Any liability beyond the ones set out in our General Terms and Conditions is excluded.

https://truckmanualshub.com/ 15

made by SCHÄFFER

Schäffer offers more than 30 different models, each adapted to your needs. Our loaders' range of operations is versatile: whether in agriculture or construction, gardening and landscaping, industrial and commercial applications, in stabling or warehouse management – Schäffer is always your best choice.

The way Schäffer loaders are developed, produced and serviced is unique. We bring more than 60 years' experience, and we always put the end-user first, working to make your job safer, more comfortable and more profitable. Additionally, at our Erwitte location in Germany we use state-of-the-art development and production technologies. Ultimately, it is our employees who continuously develop new solutions, in close contact with the end user. Years of company service together with an enduring spirit form the basis for the special competence and for our global success.

The Schäffer name does not just mean unique product quality. It also stands for safety and the optimal service that we guarantee in Germany, Europe and around the globe.

Purchasing a Schäffer loader is the beginning of a long-term relationship. Your machine will only remain a 100% genuine Schäffer if you use original replacement parts. Only then will it guarantee the reliability you need, and have the right to expect. We offer you and our service partners a 24 hour delivery service – 7 days a week, 365 days a year.

YOUR DEALER:

Schäffer

Schäffer Maschinenfabrik GmbH
Postfach 10 67 | D-59591 Erwitte
fon +49 (0)2943 9709-0
fax +49 (0)2943 9709-50
info@schaeffer.de

WWW.SCHAEFFER.DE/EN

0,75/03.19/WD. Technical changes reserved. Dimensions are approximate. In some cases, illustrations show models with custom designs.