https://truckmanualshub.com/

steyr-traktoren.com

YOUR PARTNER TO RELY ON WHEN WORK NEEDS TO BE DONE REALLY EFFICIENTLY.

THE STEYR PROFI SERIES FROM 116 TO 145 HP.

STEYR
TRAKTOREN
Your partner to rely on.

https://truckmanualshub.com/

YOUR PARTNER TO RELY ON WHEN YOU NEED TO MASTER EVERY TASK.

https://truckmanualshub.com/

CONTENTS

4–5 THE PROFI SERIES
6-15 CAB AND CONTROLS
16-17 ENGINE
18–21 TRANSMISSION
22-23 PTO
24-25 HYDRAULICS
26–27 AXLES, BRAKES
28-29 S-TECH
30-31 S-TECH 700 MONITOR
32-33 EASY-TRONIC II AND ISOBUS III
34–35 SZ FRONT LOADER
36-37 DEALERS AND SERVICE
38 MAINTENANCE
39-41 TECHNICAL DATA

https://truckmanualshub.com/

LOOKS LIKE GREAT VALUE FOR MONEY.

Efficiency and versatility with a fresh design look: our Profi series is impressive in field and pasture work and in the farmyard, and is equally capable of tackling industrial and forestry work.

There is a choice of three versions with a total of 14 different models, ranging from 116 to 145 hp. The entry-level version is the Profi Classic series, with mechanical control units, constant-displacement hydraulic pump and high roof in its standard version, it impresses with its excellent level of functionality. The new Profi models now feature even more electronics, and are equipped with a Multi-controller armrest. The innovative Profi CVT with CVT transmission and ISOBUS III provides an absolutely optimum level of comfort and refinement.

The STEYR ECOTECH engine concept is a common feature of all the models. Thanks to the environment-friendly Hi-eSCR system on the 4.5 litre (4-cylinder) and 6.7 litre (6-cylinder) turbo diesel engine with intercooling and common-rail fuel injection, the tractors effortlessly meet Level IV of the EU exhaust emissions standard, and can therefore guarantee long-term economy.

https://truckmanualshub.com/

PROFI DELIVERS ON EVERYTHING.

Low noise emission level of 69 dB (A) takes the stress out of working.

Up to 16 LED worklights for perfect 360° illumination.

Ergonomic operation using the Multicontroller armrest.

Cab and front axle suspension for more comfort.

S-TRONIC for automatic driving control strategy on the Profi CVT.

ECOTECH for more power and less diesel consumption.

PowerPlus for up to 34 hp more power.

Reliable, long-life 4-stage powershift transmission with 16 x 16 or 17 x 16 gear ratios.

Eco mode: 40 km/h at a fuel-efficient 1,550 rpm.

Continuously variable transmission with ultimate mechanical efficiency rating

Active stationary control on the Profi CVT for stopping on a steep slope without a brake.

Headland management Easy-Tronic II for automating time and distance dependent work operations for Profi and Profi CVT.

3-stage PTO speeds with Power mode or the fuel-efficient speeds of the Eco mode.

Maximum lifting power of up to 7,864 kg at the rear and 3,100 kg at the front.

STEYR front loader attachment frame is available ex-factory.

Combinations of tyres and wheels to suit every type of application.

Profi and Profi CVT both support the latest ISOBUS technology.

S-TECH precision agricultural technology – always one step ahead.

https://truckmanualshub.com/

YOUR PARTNER TO RELY ON WHEN YOU NEED TO KEEP AN EYE ON EVERYTHING.

STEYR
Engine Power
Work Rate
GPS Status
RTK-15
RTK Mid Status
Ready
Swath Map
Swath Number
Re-mark
Nudge
Swath Select
Swath 1 Recorder
Type
Straight
Cross Track En
Auto Engaged
Auto
Run 3

https://truckmanualshub.com/

THE BENEFITS OF GREATER COMFORT.

With the Comfort cab, the Profi series turns long operations into a pleasure. Regardless of the type of terrain and the kind of ground the Profi is driving across, the cab always provides optimum ride comfort and safety. It is accessible from both sides, and can be supplied with the low or high roof. It is also available with cab suspension.

FULL WORKING POWER UP FRONT The Comfort cab with tinted windows, a sun roller blind on the front windscreen and the precision control on the automatic air-conditioning system enables you to keep a cool head at all times. For added convenience, the steering column comes with height and rake adjustment, and the electrically adjustable Multicontroller armrest can be adjusted to suit the driver perfectly. The optional dual-motion seat with dynamic damping system, swivel-mounted headrest and active carbon inserts to control humidity assures pleasant, fatigue-free work. Even big adults have plenty of space on the comfortable, upholstered co-drivers seat.

PERFECT WORKING CLIMATE On the Profi and the Profi CVT, the automatic air-conditioning system, an additional sun roller blind for the rear windscreen, the electrically adjustable Multicontroller armrest, a leather-clad steering wheel and a carpet in the cab are options for enhanced comfort. These assure a pleasant working environment.

ACTIVE SUSPENSION The high quality Maximo Evolution leather-upholstered seat, seat heating and ventilation and the active suspension with automatic adjustment can be ideally adapted to your needs. This is complemented by a leather-upholstered co-driver's seat for Profi and Profi CVT.

1 Profi Classic cab with standard comfort seat.

2 Profi with Multicontroller armrest and dual-motion seat.

3 Profi CVT with Maximo-Evolution leather seat.

https://truckmanualshub.com/

COMFORT CAB:

- Low noise level of 69 dB (A) in the Profi and Profi CVT
- Comfort cabin available in low-roof and high-roof versions
- Generously proportioned luxury cab with 5-stage adjustment to cab suspension.
- 3 seat options - a choice of fabric or leather
- Tinted windows, sun roller blinds on front and rear windscreens
- Air-conditioning unit, with the option of climate control.
- Hi-fi stereo system with Bluetooth hands-free unit.

https://truckmanualshub.com/

PERFECT 360° ALL-ROUND VISIBILITY

- 4-pillar panorama cab
- High-visibility roof window
- Electrically adjustable, heated wide-angle mirrors.
- Up to 16 LED worklights

https://truckmanualshub.com/

LOOKING GREAT.

The 4-pillar panorama cab with its large windows, its high-visibility roof window and a one-piece front windscreen gives you perfect and unrestricted all-round visibility. The LED work light package assures superlative visibility even after night has fallen. Up to 6 LED work lights front and rear on the roof are fitted as standard. An optional 4 LED work light sets, one fitted low on each cab pillar, front and rear, is also available. The light intensity of 2,000 lumens per LED headlight turns night into day and ensures accurate, efficient work.

GREAT PROSPECTS. The slimline bonnet provides optimum visibility over the front working area. At the rear, for effortless attachment of implements, the CVT has clear visibility of the coupling points. With the large, electrically adjustable and heated telescopic mirrors with wide-angle insert, you can even keep an eye on wide attachments. An additional window in the roof provides unobstructed visibility of the front loader.

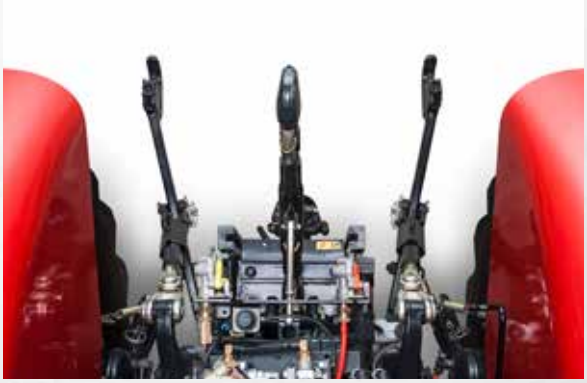

https://truckmanualshub.com/

THE PROFI AND PROFI CVT COCKPIT.

Operation of the STEYR Profi and Profi CVT tractors is simple and intuitive. All control elements and displays are designed in accordance with the latest insights into ergonomics and design. Settings can be altered using the S-Tech 700 touchscreen monitor or with the controls on the armrest. This enables you to dedicate your full attention to what really matters, helping to improve productivity and to operate economically.

https://truckmanualshub.com/

1 **Multicontroller**

2 Shuttle forwards/reverse

3 Selection of speed range

4 Operation of remote valve

5 Raising/lowering of rear and front hitch, Float setting

6 Speed controller

7 Easy-Tronic II activation

8 **S-TECH 700:** The integrated touchscreen colour monitor.

9 **Tractor and performance monitor**
The tractor and performance monitor is integrated in the right-hand A pillar in the natural field of view of the driver. It delivers the most important items of performance information at a glance.

10 **Electric joystick**
for operation of up to 7 auxiliary control units at the back and front of the vehicle.

11 **Operation of the electrical auxiliary control units at the back**

12 **Front PTO on/off**

13 **Rear PTO on/off**

14 **Eco-Drive™ operating lever**
with split manual throttle

15 **ICP – Intuitive Control Panel**

16 EHR position control

17 EHR traction control

18 EHR raising/lowering of rear hitch

19 Vibration damping of rear hitch

20 Rear PTO management

21 Slip control on/off

22 Easy-Tronic II headland management

23 All-wheel drive and differential lock ma-

24 nagement

25 Two constant engine speed memory units

26 Front hitch position control

27 Front PTO management

28 Raising/lowering front hitch

29 CVT transmission functions
Control for the electronic remote valves

30 Slip control setting

31 Lowering speed control on front hitch

32 Lifting height restriction on front hitch

33 Lowering speed control on rear hitch

34 Lifting height restriction on rear hitch

35 Response sensitivity of rear hitch

https://truckmanualshub.com/

YOUR PARTNER TO RELY ON WHEN YOU NEED TO BENEFIT FROM THE FINEST TECHNOLOGY.

https://truckmanualshub.com/

https://truckmanualshub.com/

ECOTECH AT A GLANCE

- 4 and 6-cylinder engines with turbocharger and intercooler.
- Hi-eSCR exhaust technology: highly efficient SCR system (selective catalytic reduction)
- PowerPlus power management delivers up to an extra 34 hp.
- Long maintenance intervals (600 operating hours) for the engine
- High maximum engine torque of up to 740 Nm.
- Up to 43% torque increase
- EU exhaust standard, stage IV
- S-TRONIC engine/transmission management on the Profi CVT
- Individual adaptation of driving strategy
- Engine back-pressure brake

https://truckmanualshub.com/

GREAT POWER, LESS FUEL.

The electronically controlled diesel engines effortlessly take care of all power work even at low engine speeds. The Profi range today covers a nominal power range of 116 to 145 hp. The main working range of the engine, between 1,500 and 1,900 rpm, is able, thanks to PowerPlus, to deliver an extra 34 hp of power at all times.

ECOTECH
MORE POWER, LESS DIESEL.

PREMIER LEAGUE ENGINE TECHNOLOGY. Power is used intelligently. Thanks to ECOTECH the engines in Profi models are among the best in their class. Profitability, productivity, environmental preservation and ultra-modern energy management come together in perfect symbiosis. By virtue of the unique Hi-eSCR after-treatment system, fuel consumption is optimised and power and engine response improved. Exhaust gas recirculation is not required on this system. There is therefore no adverse impact on engine or cooling system. This means maintenance intervals of 600 hours become a possibility, beating all competition. The system also requires no particle filters, therefore reducing maintenance costs.

ALWAYS ENOUGH RESERVES WITH POWER PLUS. The Power Plus engine management system provides additional boost power during transport, PTO and hydraulic operations. When Power Plus is operational, it provides 34 hp more engine power. PowerPlus is also available for PTO work while reversing, for example with a reversing unit.

SPEED PLUS: ALWAYS CONSTANT ENGINE SPEED. With Speed Plus, one or two engine speeds can be pre-defined and maintained precisely in sequence, e.g. during bale pressing, seed sowing, work with the sprayer and other precision operations of this kind. This assures a consistently constant PTO speed. This pre-setting can be disabled by Easy-Tronic II. When the implement is being raised, this cuts engine power to 0 rpm, and re-engages engine power once it has been lowered again.

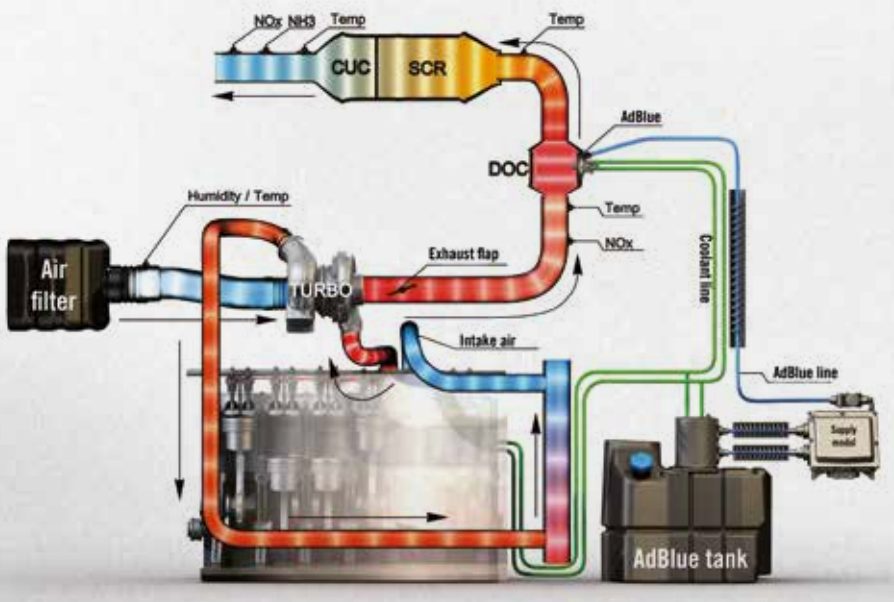

https://truckmanualshub.com/

EFFICIENCY THROUGH POWERFLOW.

During development work on the STEYR Profi transmissions, efficiency was Job One. Depending on the version, transmissions can be equipped with Powershuttle and 4-stage powershift. There is a choice of 16 x 16 speeds for top speeds of 40 km/h, and 17 x 16 speeds, also for 40 km/h ECO or 50 km/h respectively.

STEYR 4-STAGE POWERSHIFT. The full-synchromesh Powershift/Powershuttle transmission performs silky-smooth shifts without power losses. It also features electronic monitoring of shift stages. The S-Matic automatically shifts between field and road range in response to vehicle speed and load.

17 X 16 TRANSMISSION FOR 50 KM/H OR 40 KM/H ECO TRANSMISSION. The 4-stage Powershift is available with a 17th forward gear that enables the tractor to reach speeds of up to 50 km/h. The fuel-saving ECO version delivers a robust 40 km/h at a reduced engine speed. The transmission is available with an optional crawler gear. This enables the tractor to move forward at speeds down to 190 m/h.

1 Classic transmission shift lever on the Profi Classic,

2 and Multicontroller control on the Profi

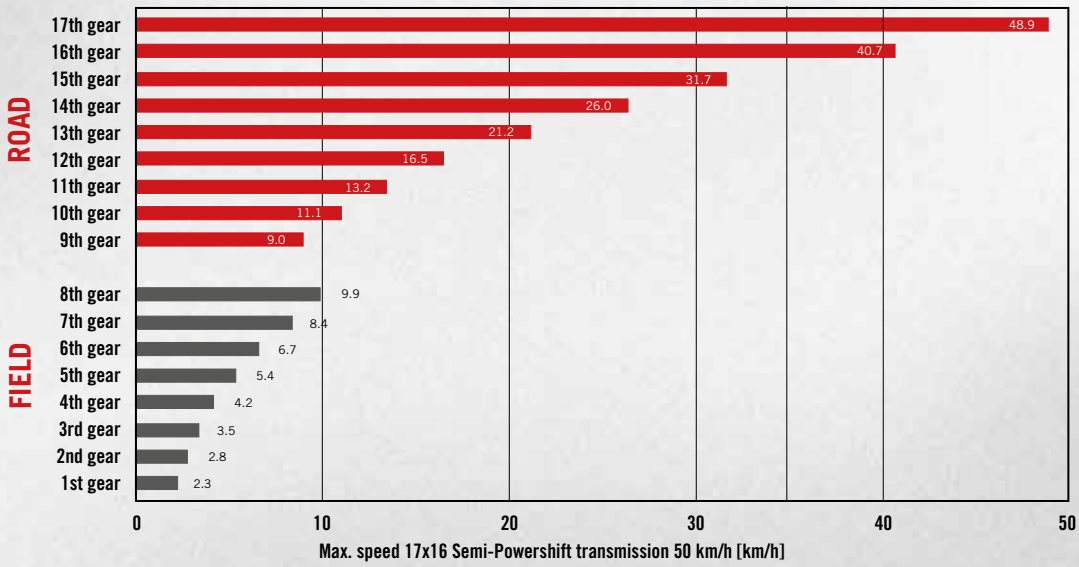

https://truckmanualshub.com/

ABLE TO MEET ALL DEMANDS:

- Transmission precisely matched to suit every requirement
- 4-stage powershift transmission
- S-Matic shifts automatically between field and road range
- 40 km/h with reduced engine speed and a 50 km/h option.
- Crawler speed up to 190m/h (18.4 R38) on Profi Classic and Profi

https://truckmanualshub.com/

THE NEW GENERATION OF DRIVE UNIT.

- Continuously variable from 0 to 50 km/h
- Active stationary control
- DKT – double-clutch technology
- S-TRONIC engine-transmission management
- 50 km/h at 1,700 rpm for optimised fuel consumption

https://truckmanualshub.com/

THE CONTINUOUSLY VARIABLE WAY TO SUCCESS.

Everything always runs smoothly with continuously variable transmission (CVT). An intelligent interplay of hydraulic and mechanical components assures economy, without having to concede any power delivery. The continuously variable ratio enables you to tackle every conceivable task effortlessly.

HIGH MECHANICAL EFFICIENCY RATING. The CVT transmission delivers a high proportion of mechanical propulsion. This robust transmission unit with double-clutch technology delivers outstanding power transmission without any interruption to traction. It also provides superlative acceleration. The CVT control logic delivers the right response characteristics for the transmission, depending on the requirements. The S-TRONIC controls the transmission ratio and engine speed to suit power requirements and automatically assures optimum fuel efficiency. Based on this design principle, engine power is used to the maximum.

ACTIVE STATIONARY CONTROL Active stationary control provides a clear safety benefit. It can keep the tractor and its towed load stationary, even on steep gradients. It also makes it possible to set off effortlessly without the need to actuate clutch and brake.

GENTLE TO AGGRESSIVE There are three 'transmission aggressiveness' settings for accelerator pedal and Multicontroller. This alters the acceleration characteristics as well as the unpowered rolling characteristics of the Profi CVT. The transport setting allows for smooth change of direction - ideal for high-speed transport operations and for operations on slippery ground. Together with the tractor-trailer brake when a trailer is being towed, this improves safety during retardation, preventing the trailer from shunting the tractor. The standard setting is intended for normal field activities. The 'aggressive' setting is specifically intended for heavy-duty field work and for operations with a front loader. It delivers direct and rapid changes of direction.

Continuously variable transmission from 0 to 50 km/h.

Double-clutch technology DKT

https://truckmanualshub.com/

POWER, TRANSMITTED EFFICIENTLY.

The PTO on the Profi series has a choice of three different operating speeds. To make full use of the power of Profi models at front and back simultaneously, for example when operating a combination of front and rear-mounted mowing equipment, a front hitch with front-mounted PTO shaft is available as an option to boost your productivity.

PERFECTLY MATCHED. The easy-to-operate PTO management function reduces workload by automatically engaging and disengaging the PTO when the front and rear hydraulics are being raised and lowered. The soft-start controller enables the attachments to be started up gently. Integration of the front-mounted PTO and front hitch at the front of the tractor makes it possible to reduce the distance between front axle and front hitch.

PTO actuation on the Profi and Profi CVT.

PTO actuation on the Profi Classic.

1 Front PTO on/off
2 Rear PTO on/off
3 Rear PTO management
4 Front PTO management

https://truckmanualshub.com/

EFFICIENT TRANSMISSION OF ENGINE POWER.

- PTO shaft 540/540E/1000 and/or 540E/1000/1000E
- Electrohydraulic engagement under load
- Integrated front and rear PTO
- PTO management for front and rear PTO
- Soft-start control

https://truckmanualshub.com/

STEYR PRECISION HYDRAULICS: ABLE TO MEET EVERY CHALLENGE.

The hitch and the auxiliary control units on our STEYR Profi models are powered by an OCLS hydraulic system (open oil circuit) or by a CCLS hydraulic system (closed oil circuit) at a displacement rate of 80 to 125 l/min. This system assures full performance at the right time and at the right place. When required, up to 95 l/min is available at every auxiliary control unit. Attachments with their own hydraulic control unit are easy to connect directly to the Power-Beyond plate. The clear layout of all the controls helps to make hitch operation intuitive, effortless and safe.

ABSOLUTE FLEXIBILITY. With connections for up to four auxiliary control units, our Profi models satisfy a large number of requirements simultaneously. The Profi Classic is equipped with mechanical control units, while the Profi and the Profi CVT have electrical control units.

ELECTRONIC TRACTION CONTROL FOR EVEN MORE POWER. The control element for the electronic rear hitch control (EHR) is integrated in the right-hand operating console. The main functions are very easy indeed to call up using the Multicontroller. Automatic traction control delivers an average of five percent more traction during soil cultivation work.

Profi Classic equipped with mechanical control units and electronic hitch control (EHR).

Profi and Profi CVT are equipped with up to 4 electronic control units.

https://truckmanualshub.com/

https://truckmanualshub.com/

POWERFUL AND SAFE

- Automatic all-wheel drive and differential lock management
- Front axle suspension
- 4WD and 4-wheel braking deliver even more braking power
- Electronic parking brake secures the Profi CVT automatically whenever the driver's seat is vacated.
- Various trailer fixtures for different transport operations.
- Tyre and rim combinations for every application.

https://truckmanualshub.com/

DRIVING WITHOUT DANGER.

GREAT PERFORMANCE. The power of the Profi models can be delivered to the ground and used comfortably with great precision. This is because, as well as active traction management, the tractors also have many other features that optimise the steering and braking characteristics in every situation. With a Profi you can get everything done well and reliably. That is as true of on-road operations as it is of pasture land, fieldwork, and forestry operations, and of work on steep terrain or in confined farmyard environments.

OUTSTANDING MANOEUVRABILITY The slim engine design provides a big wheel lock angle. In conjunction with the castor angle of twelve degrees and the co-steered mudguards, this delivers a minimum turning circle of 9.2 metres. This means that your STEYR Profi remains highly manoeuvrable even in very confined spaces.

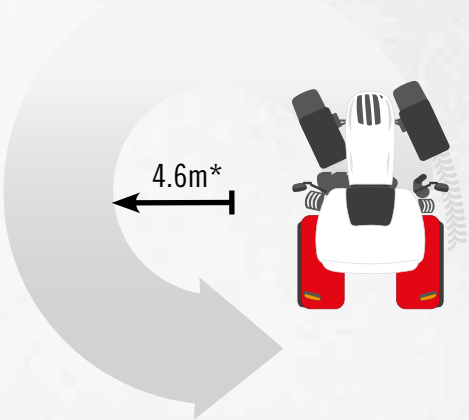

* Min. turning radius with suspended front axle, track width 1,830 mm and front wheel tyres 14.9R28.

EXCELLENT DRIVE CHARACTERISTICS. The Profi is equipped with front axle suspension that provides superlative ride comfort and that boosts traction during soil cultivation work. The double cylinder is connected to two pressure accumulators. These provide 105 mm of controlled spring travel. All front axles are suitable for heavy-duty front lift and front loader operations.

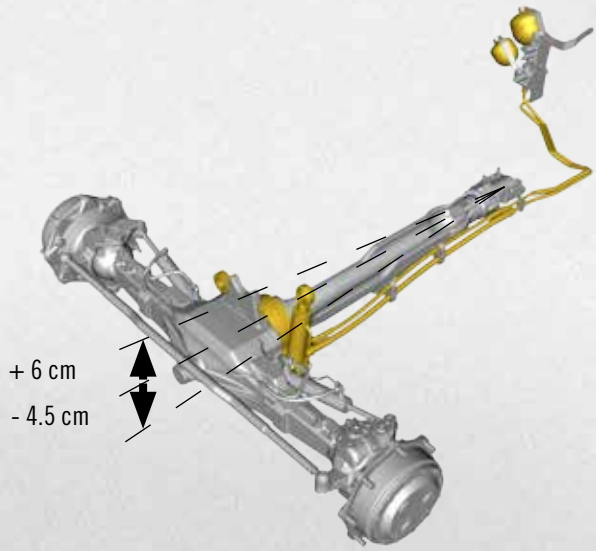

https://truckmanualshub.com/

The Profi and Profi VCT can be factory-fitted with the complete S-TECH package. This includes:

- **S-TECH monitor with touchscreen**
- **ISOBUS II**
- **ISOBUS III on the Profi CVT**
- **S-Guide steering system**

https://truckmanualshub.com/

EFFICIENCY THROUGHOUT THE RANGE: STEYR S-TECH.

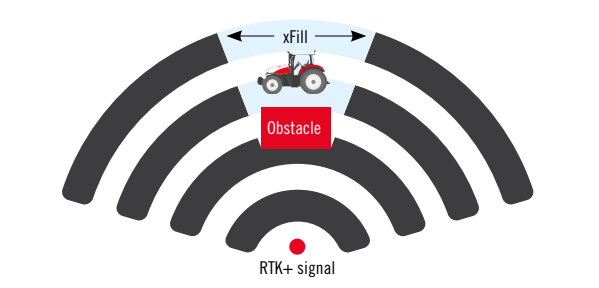

xFill: Bridging of signal losses

OPTIMUM PRECISION, MORE CONTROL AND ENHANCED PRODUCTIVITY. Track guidance, data management, integrated communication between attachments and tractor by ISOBUS and much more - our modular S-TECH system controls the entire production process. Welcome to the future of modern agriculture!

ABSOLUTELY PRECISE. The automatic, DGPS-based steering system S-Guide works to ultimate standards of precision. It guarantees parallel lane guidance when working on straight tramlines and curves. With a reproducible accuracy of up to 2.5 cm (RTK+) there is no risk of overlapping or gaps even under tough ground or weather conditions, including when working in the dark or low light. As well as GPS, signals from the GLONASS satellites are also used. To achieve the highest levels of precision, these satellite signals are automatically fine-tuned using correction data from the ground station via mobile wireless network.

LANE PRECISION, EVEN WITH A POOR SIGNAL. With the standard xFill technology available as standard in all RTK+ solutions, signal losses lasting up to 20 minutes can be bridged.

INDIVIDUAL SOLUTIONS. Various variants of S-TECH are available, with different levels of precision. From the simple retrofit solution with the GPS-based EZ pilot up to the integrated and fully-equipped S-Guide with the S-TECH 700 touchscreen monitor that can even be moved between different vehicles on your farm.

STEYR S-FLEET TELEMATICS SOLUTIONS This system makes it possible in real-time to call up the operational data from your vehicles via the wireless network. This enables machine fleet managers to stay in touch with their machines and drivers, and send and receive real-time data. This increases productivity and facilitates optimum fleet organisation.

https://truckmanualshub.com/

EVERYTHING IN SIGHT, EVERYTHING UNDER CONTROL: THE S-TECH 700 MONITOR.

ALL IMPORTANT FUNCTIONS AND DATA ON ONE TOUCHSCREEN The STEYR Profi and Profi CVT tractors fitted with S-TECH meet every requirement for precision agricultural technology. This means, for instance, that controlling ISOBUS II and III*-compatible attachments, the integration of automatic steering systems and the use of CVT tractors are all easily possible.

The armrest-integrated S-TECH 700 monitor is easily controlled via a touchscreen. There is the option of having it mounted on an adjustable rail in the right-hand side window. Through automation of all core functions, your S-TECH monitor delivers optimum operational procedures and also provides you with an overview of the work already completely, fuel consumption levels and much, much more.

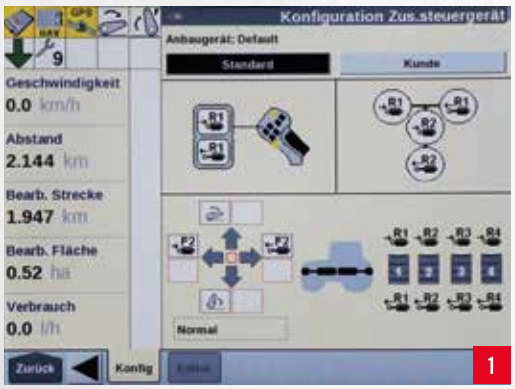

THE S-TECH 700 TOUCHSCREEN MONITOR

■ **Performance monitoring** Total performance, daily performance and individual operations is all recorded. All data can be saved to a USB pen drive from the S-TECH monitor or, using S-Fleet telematics with data transfer function, can even be transmitted by wireless to the office for analysis purposes.

■ **Vehicle settings:** A range of S-TECH displays enables settings to be adjusted - e.g. flow rate control and time control for the electronic control units. Assignment of control elements on the electronic control units can be defined individually to suit each attachment. Settings for different attachments and working conditions are saved, e.g. the EHR rear hitch setting. For example, if next time you attach a mower combination, all you have to do is select the correct set-up - and off you go!

■ **The headland management system** Easy-Tronic II facilitates the automation of operating procedures and increases the impact and daily performance levels of tractor and driver.

■ **Compatibility with ISOBUS Class II and III*:** ISOBUS-compatible devices are connected up and the user interface is displayed on the S-TECH monitor. This enables the device to be controlled easily and interactively via the monitor in the cab without the need for a separate control element and without additional wiring.

■ **Video input:** With up to three video cameras (e.g. on the back of a forage wagon / self-loading trailer or bale press), live images can be monitored. That means you always know what is happening behind you without having to look away from the working area.

1 Assign buttons to the control units

2 Determine flow rates and time control

3 ISOBUS Class II and III* compatibility

* ISOBUS Class III is only available on the PROFI CVT.

https://truckmanualshub.com/

EFFICIENT, USER-FRIENDLY AND PRECISE:

- Intuitive S-TECH 700 touchscreen monitor
- Performance monitoring
- Vehicle settings
- ISOBUS II and III* functionality
- Easy-Tronic II headland management
- Video input

https://truckmanualshub.com/

RELAXED AND PRODUCTIVE

Easy-Tronic II headland management

- Automation of the work sequences of rear and front-mounted implements on headlands and many other areas of application
- Recording and programming while in operation or while stationary
- Programming possible, dependent on time, distance and event initiation.
- Calling up of sequences by Multicontroller, S-TECH 700 monitor or on the ICP
- Simple retrospective adjustment of sequences

ISOBUS Class II:

- as well as displaying implement settings (Class I), facilitates the operation and control of these implements using the ex-factory S-TECH 700 touchscreen monitor. There is no longer any need for an additional control element.

https://truckmanualshub.com/

ISOBUS Class III enables the attached implement to control the Profi CVT.

- **Raising/lowering the hitch**
- **PTO start/stop speed**
- **Control commands for hydraulic remote valves**
- **Tractor speed for optimum utilisation**

AUTOMATION PERFECTED.

The headland management system Easy-Tronic II on the Profi and Profi CVT provides fully automated work operations when executing turns on the field, and in many other areas of application. The Class III ISOBUS system on the Profi CVT raises the exchange of operational and control data between tractor and attachment to a new level. It expands possibilities and as a result considerably increases productivity and profitability. It does this by enabling tractor operation to be controlled by the attachment.

DRIVER RELIEF. The Easy-Tronic II headland management system is designed to relieve the workload of the driver when performing headland turns and during many other control-related tasks. Each working step can be programmed either by time or by distance covered. Not only that, but additional trigger points can be set for various other automated functions. Examples of this include the lowering of engine speed after an attachment has been raised. A headland sequence can either be programmed during travel or at a standstill. Reproduction of this headland sequence can either be performed automatically or manually, and can be initiated either by the Multicontroller, on the S-TECH 700 monitor or on the ICP. Changes to the steps stored can be made easily and at any time on the S-TECH monitor.

TRACTOR CONTROLLED BY THE ATTACHED IMPLEMENT. In contrast to the Class I and II versions of ISOBUS, in which the S-TECH 700 monitor displays the settings of the implement or can also enable the implement to be controlled by the monitor, ISOBUS Class III enables the attached implement to control the tractor. This means that tractor functions are operated by the attached implement. For example, the front hitch can position itself autonomously, the PTO can be switched on and off, the control units can be actuated and the vehicle speed can be adapted to suit prevailing conditions. This results in each attachment functioning flawlessly, and above all, it relieves workload and strain for the driver.

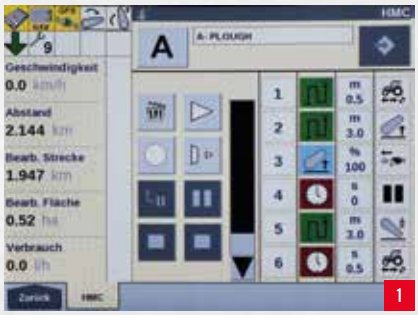

1 Easy-Tronic II headland management

2 ISOBUS Class III compatibility:

https://truckmanualshub.com/

OUR JOYSTICK TURNS FRONT LOADER OPERATIONS INTO A PLEASURE.

The STEYR SZ front loaders are perfectly designed for use with our Profi models. They embody ultimate precision, rapid response characteristics and remarkable ease of handling. All of which delivers a significant boost to productivity. All Profi models supplied ex-factory for operation with a front loader are equipped with the necessary installation spaces and hydraulic lines. There is also scope for retrofitting an SZ loader to all the tractors in the Profi range.

STEYR SZ – THE LOADER FOR PROFESSIONALS. The Profi models are ideally suited for the use of an SZ front loader. All the couplings required are factory-fitted, and it is really easy to operate the front loader using the integral joystick in the armrest.

EQUIPPED FOR ANY AND EVERY TASK. Even in very confined spaces, either in the farmyard or on the field, it is child's play to move backwards and forwards with the front loader. Quick Turn and Powershuttle also help to improve manoeuvrability. Not only that, but connecting and disconnecting the loader to the tractor could scarcely be made any easier. The hydraulic connections are arranged on a central and readily accessible distributor. This enables the loader to be mounted and removed within a matter of seconds.

1 Joystick for front loader work on the Profi CVT

2 Operation with the Profi Classic

3 High-view window for optimum visibility, specifically for front loader operations

https://truckmanualshub.com/

AN UPLIFTING FEELING

- Wide loader support frame and quick-release adapter plate to simplify the mounting of a front loader attachment
- Optional ex-factory preparation for front loader attachment
- 2 optional electronic central control units
- Intuitive control using a joystick in the armrest
- Perfect visibility to the front
- High-view window, specifically for front loader operations

FRONT LOADER MODELS	Max. lifting capacity (kg)	Max. lifting height for linkage pivot point (mm)	Vertical access loading height for shovel blade parallel/tilted (mm) / (mm)	Tractor minimum / maximum power (HP)
15 SZ	2,540	3,740	3,530 / 2,690	70 / 110
30 SZ	2,300	4,070	3,860 / 3,010	90 / 120
35 SZ	2,640	4,070	3,860 / 3,010	90 / 140
50 SZ	2,800	4,260	4,050 / 3,210	120 / 180

https://truckmanualshub.com/

https://truckmanualshub.com/

STEYR SERVICE IS ALWAYS THERE FOR YOU.

ALL-ROUND PROTECTION WITH STEYR PREMIUM SERVICE. Safe operation without downtime periods: with STEYR Premium Service you can call on expert local help seven days a week and right around the clock. Our 24-hour emergency service supports you with specialist personnel, products and spare parts, and can be reached on the freefone / toll-free number 00800 7839 7000.

GOOD SERVICE IS CLOSE BY: YOUR LOCAL STEYR DEALER. Our tractors are designed for thousands of hours of hard work, and are remarkably easy to maintain and service. You can obtain all the spare parts and service support you need from your STEYR dealer. Your local dealer is also your first point of contact for maintenance and warranty support.

CNH INDUSTRIAL CAPITAL

FINANCING MADE EASY: CNH INDUSTRIAL CAPITAL. An expert partner is essential when you are financing your STEYR tractor. We recommend CNH Industrial Capital. This agricultural and construction vehicle financing specialist can offer you a range of services – from individually tailored loans to leasing and rental offers*. CNH Industrial Capital endeavours to find the financing option best suited to your new investments, the requirements of your farm and your financial position. Also, with the proven CNH Industrial Capital accident and breakdown cover, which provides peace of mind in the event of a machine breakdown and/or related repair costs, you reduce your investment risk and can plan in a more dependable manner.

CNH INDUSTRIAL PARTS & SERVICE

STEYR GENUINE PARTS - SOMETHING YOU CAN TRULY COUNT UPON.

- **12 months of warranty**
- **24-hour delivery + support from technical specialists**
- **Best price-performance ratio throughout the year**

Our certified genuine parts are manufactured by our engineers to precise specifications, and they are subject to stringent quality inspections to ensure that your vehicles deliver optimum performance. The installation of genuine parts ensures that all the carefully matched mechanical components can operate flawlessly. You can obtain our genuine spare parts from your local STEYR retailer.

OPTIMUM PROTECTION HAS A NAME: STEYR PROTECT. STEYR PROTECT is a combination of service and warranty services with which you can save a great deal of worry and money. Whether you work with a single tractor or call an entire fleet of tractors your own, STEYR PROTECT can be tailored precisely to suit your wishes and needs, and helps you to remain productive long-term.

STEYR PROTECT protects you from high repair costs, it assures you of fixed maintenance costs for up to 5,000 operating hours, and it provides you with total protection for up to five years. There is a choice of three protection packages*: STEYR PROTECT Gold, Silver and Bronze.

STEYR PROTECT GOLD

- **Maintenance contract**
- **Extended warranty**
- **Comprehensive insurance**

STEYR PROTECT SILVER

- **Maintenance contract**
- **Extended warranty**

STEYR PROTECT BRONZE

- **Maintenance contract**

* Not available in all markets

https://truckmanualshub.com/

MAKE IT EASY FOR YOURSELF: MAINTENANCE WORK.

Comfortable tank filling.

Effortless inspection of vee belt.

Checking of oil level and topping up without lifting the bonnet

Continuous cleaning via a Piclon filter ensures that the filter only needs to be maintained when the corresponding warning lamp lights up.

One-section bonnet support by gas struts can be lifted into two positions (45°/90°), even with a front-mounted attachment.

Fast and simple cleaning of the radiator and air-conditioning system.

https://truckmanualshub.com/

PERFORMANCE THROUGH INNOVATION.

ENGINE POWER STEYR 4135 PROFI

1. Max. power with Power Plus at 1,800 - 1,900 rpm = 124 kW (169 hp)
2. Max. power at 1,800 - 1,900 rpm = 107 kW (145 hp)
3. Nominal rating with Power Plus at 2,200 rpm = 114 kW (155 hp)
4. Nominal rating at 2,200 rpm = 99 kW (135 hp)
   Increased torque Standard/Power Plus 40% /42%

A. Max. torque with Power Plus at 1,500 rpm = 700 Nm
B. Max. torque at 1,500 rpm = 605 Nm

Under certain circumstances, PowerPlus is available for transport operations and for PTO work.

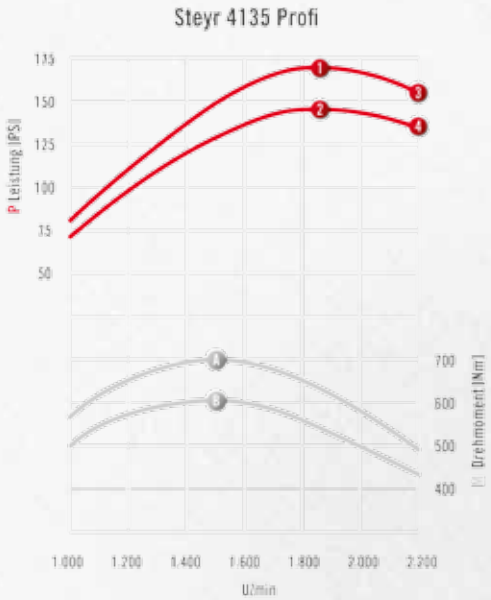

STEYR PROFI DIMENSIONS, MODEL-SPECIFIC

Low-roof cab

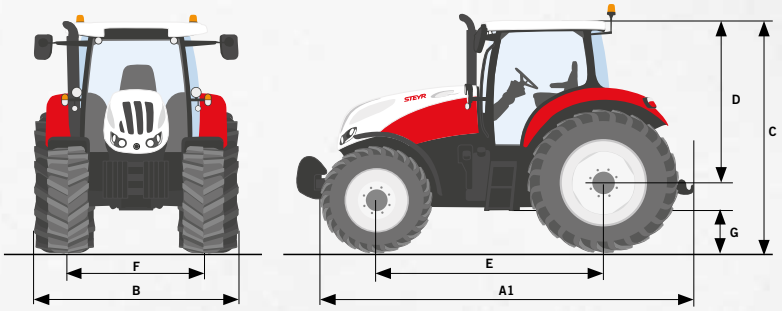

High-roof cab

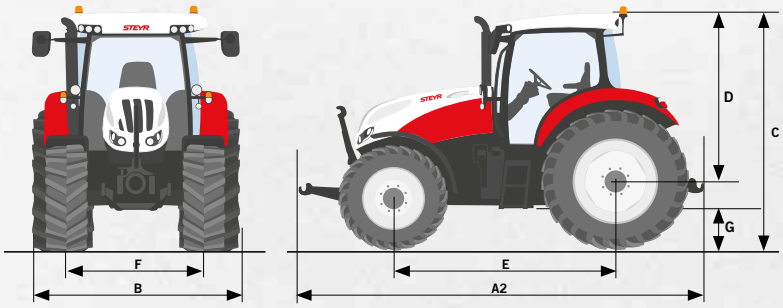

DIMENSION[1)]	PROFI CLASSIC / PROFI / PROFI CVT
A1: Min. total length rear lifting arms horizontal , unsuspended/ suspended front axle [mm] **A2:** Total length incl. front and rear lifting arms horizontal, unsuspended / suspended front axle [mm]	4,506 / 4,556 5,137 / 5,189
B: Min. overall width (across the rear mudguards) [mm] **C:** Total height of standard cab / suspended cab / low-roof cab / sprung low-roof cab [mm]	2,470 3,005 / 3,025 / 2,887 / 2,907
D: Height from centre of rear axle to top edge of cab (standard cab, suspended cab, low-roof cab, low-roof suspended cab) [mm]	2,130 / 2,150 / 2,012 / 2,032
E: Standard wheelbase / suspended front axle [mm] **F:** Front track width min.-max. / rear min.-max. [mm]	2,642 / 2,684 1.580-2.256 / 1.430-2.134

[1)] with standard tyres

https://truckmanualshub.com/

MODEL	TRANSMISSION*			ENGINE				
STEYR TRAKTOREN	4-stage powershift transmission with Powershuttle 16 forward and reverse gears 32 forward and reverse gears with crawler ratio	17 forward and 16 reverse gears 40 km/h Economy 17 forward and 16 reverse gears 50 km/h	Vehicle speed * Continuously Variable Transmission 0 – 50 km/h or 0 – 40 km/h ECO	Max. engine power ECE R120 [1] Power Plus [2] [kW/hp] Rated engine power ECE R120 [1] Power Plus [2] [kW/hp]	Max. engine power ECE R120 [1] [kW/hp] Rated engine power ECE R120 [1] [kW/hp]	Engine speed at max. engine power [rpm] Rated engine speed [rpm]	Max. torque with Power Plus [2] [Nm @ 1,500 rpm]	Max. torque [Nm @ 1,500 rpm]
4115 PROFI CLASSIC	■ / □	□ / □	-	107 / 145 / 96 / 131	92 / 125 / 85 / 116	1,800 – 1,900 / 2,200	590	528
4125 PROFI CLASSIC	■ / □	□ / □	-	114 / 155 / 103 / 140	99 / 135 / 92 / 125	1,800 – 1,900 / 2,200	637	560
4135 PROFI CLASSIC	■ / □	□ / □	-	124 / 169 / 114 / 155	107 / 145 / 99 / 135	1,800 – 1,900 / 2,200	700	605
4145 PROFI CLASSIC	■ / □	□ / □	-	129 / 175 / 118 / 160	114 / 155 / 107 / 145	1,800 – 1,900 / 2,200	700	650
6145 PROFI CLASSIC	■ / □	□ / □	-	129 / 175 / 121 / 165	116 / 158 / 107 / 145	1,800 – 1,900 / 2,200	740	650
4115 PROFI	■ / □	□ / □	-	107 / 145 / 96 / 131	92 / 125 / 85 / 116	1,800 – 1,900 / 2,200	590	528
4125 PROFI	■ / □	□ / □	-	114 / 155 / 103 / 140	99 / 135 / 92 / 125	1,800 – 1,900 / 2,200	637	560
4135 PROFI	■ / □	□ / □	-	124 / 169 / 114 / 155	107 / 145 / 99 / 135	1,800 – 1,900 / 2,200	700	605
4145 PROFI	■ / □	□ / □	-	129 / 175 / 118 / 160	114 / 155 / 107 / 145	1,800 – 1,900 / 2,200	700	650
6145 PROFI	■ / □	□ / □	-	129 / 175 / 121 / 165	116 / 158 / 107 / 145	1,800 – 1,900 / 2,200	740	650
4115 PROFI CVT	- / -	- / -	■	107 / 145 / 96 / 131	92 / 125 / 85 / 116	1,800 – 1,900 / 2,200	590	528
4125 PROFI CVT	- / --	- / -	■	114 / 155 / 103 / 140	99 / 135 / 92 / 125	1,800 – 1,900 / 2,200	637	560
4135 PROFI CVT	- / -	- / -	■	124 / 169 / 114 / 155	107 / 145 / 99 / 135	1,800 – 1,900 / 2,200	700	605
4145 PROFI CVT	- / -	- / -	■	129 / 175 / 118 / 160	114 / 155 / 107 / 145	1,800 – 1,900 / 2,200	700	650

MODEL	HYDRAULICS								
STEYR TRAKTOREN	EHR hitch control with dynamic Ride Control vibration damping	Max. displacement			Max. lifting power at 80 / 113 / 125 l/min displacement [kg]	Auxiliary control units			
		80 l/min with constant displacement pump	113 l/min with pressure/volume control, load-sensing	125 l/min with pressure/volume control, load-sensing		rear, up to 4 can be configured		centrally mounted	
						mechanical	electrical	up to 2 mechanical	up to 3 electrical
4115 PROFI CLASSIC	■	■	□	-	7,115 / 7,864 / -	■	-	■	-
4125 PROFI CLASSIC	■	■	□	-	7,115 / 7,864 / -	■	-	■	-
4135 PROFI CLASSIC	■	■	□	-	7,115 / 7,864 / -	■	-	■	-
4145 PROFI CLASSIC	■	■	□	-	7,115 / 7,864 / -	■	-	■	-
6145 PROFI CLASSIC	■	■	□	-	7,115 / 7,864 / -	■	-	■	-
4115 PROFI	■	-	■	-	- / 7.864 / -	-	■	-	■
4125 PROFI	■	-	■	-	- / 7.864 / -	-	■	-	■
4135 PROFI	■	-	■	-	- / 7.864 / -	-	■	-	■
4145 PROFI	■	-	■	-	- / 7.864 / -	-	■	-	■
6145 PROFI	■	-	■	-	- / 7.864 / -	-	■	-	■
4115 PROFI CVT	■	-	-	■	- / - / 7.864	-	■	-	■
4125 PROFI CVT	■	-	-	■	- / - / 7.864	-	■	-	■
4135 PROFI CVT	■	-	-	■	- / - / 7.864	-	■	-	■
4145 PROFI CVT	■	-	-	■	- / - / 7.864	-	■	-	■

■ Standard □ Optional — Not available

* depending on country-specific regulations and specifications [1] ECE R120 complies with ISO 14396 and 97/68EC

https://truckmanualshub.com/

OECD torque increase Standard/Power Plus[2] [%]	Common Rail, 4-valve diesel engine, turbocharger and intercooler, exhaust standard Level IV Number of cylinders / Swept cylinder volume [cm3]	Fuel tank Diesel standard (optional) / AdBlue [l]	PTO: Electro-hydraulic activation with Soft-Start control — PTO speed [rpm] 540/540E/1000	PTO speed [rpm] 540E/1000/1000E	Engine speed [rpm] 1,969/1,546/1,893	Engine speed [rpm] 1,592/1,893/1,621	Stationary PTO	Front-mounted PTO* [rpm] 1000 @ 1,895 engine speed
41 / 42	4 / 4,485	198 (230) / 39.5	■	□	■	□	□	□
40 / 43	4 / 4,485	198 (230) / 39.5	■	□	■	□	□	□
40 / 42	4 / 4,485	198 (230) / 39.5	■	□	■	□	□	□
40 / 37	4 / 4,485	198 (230) / 39.5	■	□	■	□	□	□
40 / 40	6 / 6,728	198 (230) / 39.5	■	□	■	□	□	□
41 / 42	4 / 4,485	198 (230) / 39.5	■	□	■	□	□	□
40 / 43	4 / 4,485	198 (230) / 39.5	■	□	■	□	□	□
40 / 42	4 / 4,485	198 (230) / 39.5	■	□	■	□	□	□
40 / 37	4 / 4,485	198 (230) / 39.5	■	□	■	□	□	□
40 / 40	6 / 6,728	198 (230) / 39.5	■	□	■	□	□	□
41 / 42	4 / 4,485	198 (230) / 39.5	■	□	■	□	□	□
40 / 43	4 / 4,485	198 (230) / 39.5	■	□	■	□	□	□
40 / 42	4 / 4,485	198 (230) / 39.5	■	□	■	□	□	□
40 / 37	4 / 4,485	198 (230) / 39.5	■	□	■	□	□	□

	ALL-WHEEL DRIVE	FRONT AXLE / STEERING			BRAKES	TYRES	WEIGHT	CAB
Integrated front hitch* max. lifting capacity at 80 / 113 / 125 l/min displacement [kg]	Electrohydraulic shift action with traction management.	Suspended front axle	Steering system / steering wheel Hydraulic / height and angle adjustment	Steering lock / Min. turning circle radius [3] track width 1,830 mm [m]	Wet brake discs, hydraulically actuated; all-wheel brake* with Opti-Stop two-line pneumatic braking system*	Maximum tyre size[4] front / Rear	Min. weight [kg]*/ permitted gross vehicle weight (GVW)* [kg]	
2,800 / 3,100 / -	■	□	■	44° / 4.6	■	440/65 R28 / 540/65 R38	4,890 / 9,500	**Comfort cab*** Suspended comfort cab with climate control system and an interior noise level of just 73 dB(A). Driver's seat with fabric upholstery, comfortable co-driver's seat with safety belt. Tinted windows, opening rear window, roof window, windscreen wipe-wash system, LED worklights in roof at front and back and central control console for the worklights. Your Steyr retailer will be delighted to advise you about all available options for the Profi Classic, e.g. dual-motion driver's seat, low-roof etc.
2,800 / 3,100 / -	■	□	■	44° / 4.6	■	440/65 R28 / 540/65 R38	4,890 / 9,500	
2,800 / 3,100 / -	■	□	■	44° / 4.6	■	440/65 R28 / 540/65 R38	4,890 / 9,500	
2,800 / 3,100 / -	■	□	■	44° / 4.6	■	440/65 R28 / 540/65 R38	4,890 / 9,500	
2,800 / 3,100 / -	■	□	■	44° / 4.6	■	440/65 R28 / 540/65 R38	5,020 / 9,500	
- / 3.100 / -	■	□	■	44° / 4.6	■	480/65 R28 / 600/65 R38	4,890 / 10,500	**Comfort cab*** Suspended comfort cab with climate control system and an interior noise level of just 69 dB(A). Driver's seat with fabric upholstery, comfortable co-driver's seat with safety belt. Multi-controller armrest with ICP (intuitive control panel) and joystick. S-TECH 700 monitor with ISOBUS connection. Tinted windows, opening rear window, roof window, windscreen wipe-wash system, LED worklights in roof at front and back and central control console for the worklights. Your Steyr retailer will be delighted to advise you about all available options for the Profi and Profi CVT such as dual-motion or Maximo-Evolution driver's seat with leather upholstery, active suspension with autom. adjustment, with heating & ventilation, leather-upholstered co-driver's seat and leather-clad steering wheel, automatic climate control system, electrical adjustment of the Multicontroller armrest, sun roller blind for the rear window and cab floor carpet.
- / 3.100 / -	■	□	■	44° / 4.6	■	480/65 R28 / 600/65 R38	4,890 / 10,500	
- / 3.100 / -	■	□	■	44° / 4.6	■	480/65 R28 / 600/65 R38	4,890 / 10,500	
- / 3.100 / -	■	□	■	44° / 4.6	■	480/65 R28 / 600/65 R38	4,890 / 10,500	
- / 3.100 / -	■	□	■	44° / 4.6	■	480/65 R28 / 600/65 R38	5,020 / 10,500	
- / - / 3.100	■	□	■	44° / 4.6	■	480/65 R28 / 600/65 R38	4,890 / 10,500	
- / - / 3.100	■	□	■	44° / 4.6	■	480/65 R28 / 600/65 R38	4,890 / 10,500	
- / - / 3.100	■	□	■	44° / 4.6	■	480/65 R28 / 600/65 R38	4,890 / 10,500	
- / - / 3.100	■	□	■	44° / 4.6	■	480/65 R28 / 600/65 R38	4,890 / 10,500	

[2] Power Plus is available on the basis of defined prerequisites for transport operations and PTO operations [3] with standard tyres [4] Other tyres available as special equipment on request (i.e. as cost options)

https://truckmanualshub.com/

YOUR PARTNER TO RELY ON WHEN YOU NEED TO MANAGE EVERYTHING.

https://truckmanualshub.com/

https://truckmanualshub.com/

a partner company of

STEYR TRAKTOREN

STEYR-traktoren.com
facebook.com/STEYRTraktoren

You drive better when you are safe. Before using this vehicle, please read the Operating Manual and become familiar with the use of each of the controls. Note the contents of the instruction panels and use the safety equipment for your own personal safety. This brochure is intended for use internationally. The availability of a few models and of standard and special equipment items may vary from one country to another. STEYR reserves the right at any time and without prior announcement to make changes to the design and technical version without this in any way obliging STEYR to transfer these to units already sold.

Details, descriptions and pictorial material reflect the current status at the date of publication, but can be amended without prior announcement and at any time. Pictorial materials may show certain national versions, items of special equipment as well as non-complete standard versions.

TP01 / SM / 05.16 / Printed in Austria – Cod. n. 16S0001COMINB – **www.STEYR-traktoren.com**