www.truck-freeworkshop.com

TECHNICAL MANUAL

UNIT MAINTENANCE MANUAL

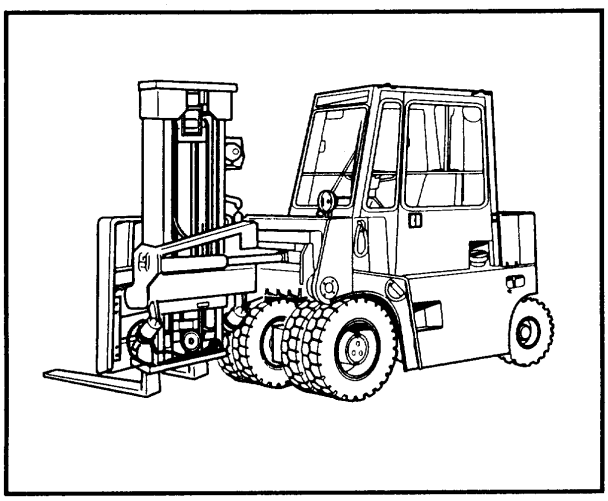

TRUCK LIFT
CLEAN BURN DIESEL,
FRONT/SIDE LOADING
6,000 LB CAPACITY
MODEL R60SL-DC
NSN 3930-01-378-7479

Approved for public release:
distribution is unlimited.

INTRODUCTION	1-1
VEHICLE MAINTENANCE	2-1
ENGINE MAINTENANCE	3-1
FUEL SYSTEM MAINTENANCE	4-1
EXHAUST SYSTEM MAINTENANCE	5-1
COOLING SYSTEM MAINTENANCE	6-1
ELECTRICAL SYSTEM MAINTENANCE	7-1
TRANSMISSION SYSTEM MAINTENANCE	8-1
FINAL DRIVE MAINTENANCE	9-1
AXLE MAINTENANCE	10-1
BRAKE SYSTEM MAINTENANCE	11-1
WHEEL MAINTENANCE	12-1
STEERING SYSTEM MAINTENANCE	13-1
FRAME MAINTENANCE	14-1
BODY AND CAB MAINTENANCE	15-1
BODY ACCESSORY ITEMS MAINTENANCE	16-1
HYDRAULIC SYSTEM MAINTENANCE	17-1
MAINTENANCE ALLOCATION CHART	B-1
EXPENDABLE/DURABLE SUPPLIES AND MATERIALS	C-1
ALPHABETICAL INDEX	INDEX-1

HEADQUARTERS, DEPARTMENT OF THE ARMY
JANUARY 1997

www.truck-freeworkshop.com

WARNING

- **Drycleaning solvent (P-D-680) is TOXIC and flammable. Wear protective goggles and gloves; use only in a well-ventilated area; avoid contact with skin, eyes, and clothes; and do not breathe vapors. Keep away from heat or flame. Never smoke when using solvent; the flashpoint for type I drycleaning solvent is 100°F (38°C) and for type II is 138°F (50°C). Failure to do so may result in injury or death to personnel.**

- **If personnel become dizzy while using cleaning solvent, immediately get fresh air and medical help. If solvent contacts skin or clothes, flush with cold water. If solvent contacts eyes, immediately flush eyes with water and get immediate medical attention.**

WARNING

Remove rings, bracelets, wristwatches, and neck chains before working on any vehicle. Jewelry can catch on equipment and cause injury, or may short across an electrical circuit and cause severe burns or electrical shock.

WARNING

Cab door weighs 85 lbs (39 kg). Use the aid of an assistant for removal to prevent possible injury to personnel.

WARNING

Allow engine to cool before performing maintenance on the muffler, exhaust pipe, exhaust manifold, or turbocharger. If necessary, use insulated pads and gloves.

WARNING

Use care when removing wiper drive arm. Wiper driver arm is under spring tension and can act as projectile when released and could cause severe eye injury.

WARNING

Fuel is very flammable and can explode easily. To avoid serious injury or death:

- **Keep fuel away from open flame or any spark (ignition source).**

- **Keep at least a B-C fire extinguisher within easy reach when working with fuel or on a fuel system.**

- **Do not work on fuel system when engine is hot; fuel can be ignited by a hot engine.**

www.truck-freeworkshop.com

WARNING

Engine access cover weighs 70 lbs (32 kg). Attach suitable lifting device prior to installation to prevent possible injury to personnel.

WARNING

Use care when removing springs. Springs are under spring tension and can act as projectiles when released and could cause severe eye injury.

WARNING

- **Transmission oil may be hot when drained. Do not come in contact with hot oil. Failure to do so may result in injury to personnel.**
- **Transmission oil is slippery and can cause falls. To avoid injury, wipe up spilled oil with rags.**

WARNING

Transmission oil is flammable. Ensure engine is cool to prevent fire. Injury or death to personnel could result.

WARNING

Wiper motor will drop when mounting nut is removed. Support wiper motor assembly during removal to prevent damage to equipment or injury to personnel.

WARNING

Be careful not to short out battery terminals. Do not smoke or use open flame near batteries. Batteries may explode from a spark. Battery acid is harmful to skin and eyes.

www.truck-freeworkshop.com

WARNING

Remove or disconnect batteries and turn master battery disconnect switch off prior to performing maintenance in immediate battery area or working on electrical system. Such disconnection's prevent electrical shock to personnel or equipment.

WARNING

Remove all jewelry such as rings, dog tags, bracelets, etc. If jewelry contacts battery terminal, a direct short may result in instant heating of tools, damage to equipment, and injury or death to personnel.

WARNING

When working on parking brake control linkage, place chocks in front of and behind one of rear wheels to keep vehicle from rolling. Failure to do so could cause serious injury or death to personnel.

WARNING

CARC paint contains isocyanate (HDI) which is highly irritating to skin and respiratory system. High concentrations of HDI can produce symptoms of itching and reddening of skin, a burning sensation in throat and nose and watering of the eyes. In extreme concentrations, HDI can cause cough, shortness of breath, pain during respiration, increased sputum production, and chest tightness. The following precautions must be taken whenever using CARC paint:

- **ALWAYS use air line respirators when using CARC paint unless air sampling shows exposure to be below standards. Use chemical cartridge respirator if air sampling is below standards.**
- **DO NOT let skin or eyes come in contact with CARC paint. Always wear protective equipment (gloves, ventilation mask, safety goggles, etc.).**
- **DO NOT use CARC paint without adequate ventilation.**
- **NEVER weld or cut CARC-coated materials.**
- **DO NOT grind or sand painted equipment without high-efficiency air purifying respirators in use.**
- **BE AWARE of CARC paint exposure symptoms; symptoms can occur a few days after initial exposure. Seek medical help immediately if symptoms are detected.**

www.truck-freeworkshop.com

WARNING

Mixing of CARC paint must be done in a well-ventilated mixing room or spraying area away from open flame with personnel wearing eye protection. Paint is flammable and can cause injury or death to personnel

WARNING

Protective equipment (gloves, goggles, ventilation mask) must be worm when using CARC paint. DO NOT leave any skin exposed. Contact with CARC paint can cause skin burns.

WARNING

High-efficiency air purifying respirators should be used when grinding or sanding CARC-coated equipment. Failure to do so may result in injury or death to personnel.

WARNING

Cleaning compound can cause skin rash and can give off harmful vapors. To avoid injury, use in well-ventilated area. Wash immediately with soap and water if compound contacts skin or clothes.

WARNING

Compressed air used for cleaning purposes will not exceed 30 psi (207 kPa). Use only with effective chip guarding and personal protective equipment (goggles/shield, gloves, etc.).

WARNING

Do not drain engine oil while engine is hot. Severe injury to personnel may result.

WARNING

BURN HAZARD

Allow engine to cool before performing maintenance on the muffler, exhaust pipe, exhaust manifold, or turbocharger. If necessary, use insulated pads and gloves.

www.truck-freeworkshop.com

WARNING

Do not touch hot exhaust system with bare hands; injury to personnel will result.

WARNING

Fuel is very flammable and can explode easily. To avoid serious injury or death, keep fuel away from open fire and keep fire extinguisher within easy reach when working with fuel. Do not work on fuel system when engine is hot. Fuel can be ignited by hot engine. When working with fuel, post signs that read "NO SMOKING WITHIN 50 FEET (15 m)".

WARNING

Fuel and oil are slippery and can cause falls. To avoid injury, wipe up spilled fuel or oil with rags.

WARNING

Diesel fuel is flammable. Do not perform this procedure near fire, flame, or sparks. Injury or death to personnel could result.

- **Do not fill tank with engine running, while smoking, or when near an open flame. Never overfill the tank or spill fuel. If fuel is spilled, clean it up immediately.**
- **Be sure to use correct type and grade of fuel.**
- **Ground fuel funnel or nozzle against filler neck to prevent sparks and be sure to replace fuel tank cap.**

WARNING

Ensure equipment will not move while repairing or inspecting it. For trailers, "red tag" the hitch, and block or chock wheels or tracks. For powered equipment, block or chock wheels or tracks, and "red tag" the starter. Prevent a "quick fix" from becoming a quick injury.

www.truck-freeworkshop.com

WARNING

To avoid personal injury, use a hoist or get assistance when lifting components that weigh more than 50 lbs (23 kg). Ensure all chains, hooks, slings, etc., are in good condition and are of correct capacity. Ensure hooks are positioned correctly. Always use a spreader bar when necessary. The lifting hooks must not be side loaded.

WARNING

When checking connections, do not let tools touch battery box. A direct short, arcing, tool heating to red hot and battery explosion could result, causing injury or death to personnel.

WARNING

Sharp edges can cut hands. Use rags or a brush to lubricate.

WARNING

Hot parts can burn personnel. Let hot parts cool before starting work.

WARNING

- **Always use "three point contact" with vehicle; face vehicle when entering or leaving cab. Three point contact means that three out of four arms and legs are in contact with vehicle at all times during mount and dismount.**
- **Clean shoes and wipe hands before climbing on. Use grab handles when mounting.**
- **Never use control levers as a hand hold when climbing on or off. Never step on foot controls when mounting or climbing off.**
- **Never enter a moving machine.**

WARNING

Do not use equipment for purposes other than its intended use, unless authorized by the NICP/commodity command.

www.truck-freeworkshop.com

WARNING

- **Never crawl under equipment when performing maintenance unless equipment is securely blocked. Equipment may fall and cause serious injury or death to personnel.**
- **Keep clear of equipment when equipment is being raised or lowered. Equipment may fall and cause serious injury or death to personnel.**
- **Do not work on any item supported only by lift jacks or hoist. Always use blocks or proper stands to support the item prior to any work. Equipment may fall and cause injury or death to personnel.**
- **Do not allow heavy components to swing while hanging by lifting device. Equipment may strike personnel and cause injury.**
- **Exercise extreme caution when working near a cable or chain under tension. A snapped cable, shifting or swinging load may result in injury or death to personnel.**

WARNING

All personnel must stand clear during lifting operations. A swinging or shifting load may cause injury or death to personnel.

WARNING

Always disconnect battery ground cable or power source before working on electrical components. Discharge capacitors as noted. If personnel receive an electrical shock, get immediate medical attention.

WARNING

When working on a running engine, provide shielding for exposed rotating parts. Tools, clothing, or hands can get caught and cause serious injury to personnel.

WARNING

Ensure your seatbelt is fastened before operating vehicle. Avoid sudden stops and operate at a safe speed.

WARNING

Do not connect VTM to power source while VTM power switch is on. Battery explosion could occur.

www.truck-freeworkshop.com

WARNING

Use care when removing snap and retaining rings. Snap and retaining rings are under spring tension and can act as projectiles when released and could cause severe eye injury.

WARNING

Do not attempt to repair a spring brake fail-safe. High spring tension makes repair too dangerous and severe injury or death to personnel could result.

WARNING

Always wear eye protection when replacing wheel studs. Eye injury may result if metal chips contact eyes.

WARNING

Ensure studs are fully seated in slots before tightening nuts, or wheel could come off during operation of vehicle, resulting in injury or death of personnel.

WARNING

Hydraulic fluid is poisonous and can be absorbed through your skin. Never service hydraulic system when fluid is hot or under pressure. Avoid skin contact. Wash hands with soap immediately after servicing and wash off any fluid that comes in contact with skin. If fluid gets into eyes, wash eyes immediately and get medical help.

WARNING

Brake fluid, lubricants, and other chemicals can cause serious injury to eyes. If your eyes are effected, flush immediately with cold water and seek medical attention.

WARNING

Use caution when removing cap on hydraulic tank; Hydraulic tank is pressurized 3 to 6 pounds.

www.truck-freeworkshop.com

TECHNICAL MANUAL

No. 10-3930-669-20

TM 10-3930-669-20
HEADQUARTERS
DEPARTMENT OF THE ARMY
Washington, D.C. *21 JANUARY 1997*

UNIT SUPPORT MAINTENANCE

TRUCK, LIFT, FORK, CLEAN BURN DIESEL, FRONT/SIDE LOADING, 6,000 LB CAPACITY MODEL R60SL-DC NSN 3930-01-378-7497

Approved for public release; distribution is unlimited.

REPORTING OF ERRORS AND RECOMMENDING IMPROVEMENTS

You can help improve this manual. If you find any mistakes or if you know of a way to improve the procedures, please let us know. Mail your letter, DA Form 2028 (Recommended Changes to Publications and Blank Forms), or DA Form 2028-2 located at the back of this manual direct to: Commander, US Army Tank-automotive and Armament Command, ATTN: AMSTA-IM-OPIT, Warren, MI 48397-5000. A reply will be furnished to you. You may also provide DA Form 2028-2 information to TACOM via datafax or e-mail. TACOM's datafax number for AMSTA-IM-OPIT is (810) 574-6323 and the e-mail address is: amsta-im-opit@cc.tacom-tech-pubs@ cc.tacom.army.mil.

TABLE OF CONTENTS

Page

CHAPTER 1 **INTRODUCTION** 1-1
Section I General Information 1-2
Section II Equipment Description and Data 1-5
Section III Principles of Operation 1-6

CHAPTER 2 **VEHICLE MAINTENANCE** 2-1
Section I Repair Parts, Tools, Special Tools, Test, Measurement, and Diagnostic Equipment (TMDE), and Support Equipment 2-2
Section II Service Upon Receipt 2-3
Section III Preventive Maintenance Checks and Services (PMCS) 2-5
Section IV Troubleshooting 2-9
Section V Maintenance Procedures 2-488
Section VI Preparation for Storage or Shipment 2-495

CHAPTER 3 **ENGINE MAINTENANCE** 3-1

CHAPTER 4 **FUEL SYSTEM MAINTENANCE** 4-1

www.truck-freeworkshop.com

TABLE OF CONTENTS (CONT)

Page

CHAPTER 5 **EXHAUST SYSTEM MAINTENANCE** 5-1

CHAPTER 6 **COOLING SYSTEM MAINTENANCE** 6-1

CHAPTER 7 **ELECTRICAL SYSTEM MAINTENANCE** 7-1

CHAPTER 8 **TRANSMISSION SYSTEM MAINTENANCE** 8-1

CHAPTER 9 **FINAL DRIVE MAINTENANCE** 9-1

CHAPTER 10 **AXLE MAINTENANCE** 10-1

CHAPTER 11 **BRAKE SYSTEM MAINTENANCE** 11-1

CHAPTER 12 **WHEEL MAINTENANCE** 12-1

CHAPTER 13 **STEERING SYSTEM MAINTENANCE** 13-1

CHAPTER 14 **FRAME MAINTENANCE** 14-1

CHAPTER 15 **BODY AND CAB MAINTENANCE** 15-1

CHAPTER 16 **BODY ACCESSORY ITEMS MAINTENANCE** 16-1

CHAPTER 17 **HYDRAULIC SYSTEM MAINTENANCE** 17-1

APPENDIXES:

A REFERENCES A-1

B MAINTENANCE ALLOCATION CHART B-1

C EXPENDABLE/DURABLE SUPPLIES AND MATERIALS C-1

D ILLUSTRATED LIST OF MANUFACTURED ITEMS D-1

E TORQUE LIMITS E-1

ALPHABETICAL INDEX Index-1

www.truck-freeworkshop.com

HOW TO USE THIS MANUAL

This manual is designed to help maintain the Truck, Lift, Fork (NSN 3930-01-378-7497). Listed below are some special features included in this manual to help locate and use the needed information:

- A front cover table of contents is provided for quick reference to chapters and sections that will be used often.
- WARNING, CAUTION, and NOTE headings, subject headings, and other essential information are printed in bold type making them easier to see.
- The maintenance tasks describe what must be done to the forklift before starting the task (Equipment Condition) and what must be done to return the forklift to operating condition after the task is finished (Follow-On Maintenance).
- The Appendixes are located at the end of the manual. They contain a reference guide to other manuals, the Maintenance Allocation Chart (MAC), a list of expendable/durable supplies and materials, and other material for maintaining the forklift.
- In addition to text, there are exploded-view illustrations showing how to take a component off and put it back on. Cleaning and inspection procedures are also included as required.
- Chapter 2 of this manual covers Unit level Preventive Maintenance Checks and Services (PMCS) and basic troubleshooting, as well as general maintenance.

Follow these guidelines when using this manual:

- Read all WARNINGS and CAUTIONS before performing any procedure.
- The equipment conditions found in the maintenance procedures are of a general nature and the mechanic may be able to perform only certain steps within a procedure to accomplish the equipment condition.

www.truck-freeworkshop.com

CHAPTER 1

INTRODUCTION

Para	Contents	Page
	Section I. - General Information	
1-1	Scope	1-3
1-2	Maintenance Forms, Records, and Reports	1-4
1-3	Destruction of Army Material to Prevent Enemy Use	1-4
1-4	Preparation for Storage or Shipment	1-4
1-5	Official Nomenclature, Names, and Designations	1-4
1-6	Reporting Equipment Improvement Recommendations (EIR)	1-4
1-7	Warranty Information	1-4
1-8	Corrosion Prevention and Control	1-4
	Section II. - Equipment Description and Data	
1-9	Equipment Characteristics, Capabilities, and Features	1-5
1-10	Location and Description of Major Components	1-5
1-11	Equipment Data	1-5
	Section III. - Principles of Operation	
1-12	Power Train	1-6
1-13	Engine Systems	1-8
1-14	Electrical System	1-11
1-15	Hydraulic System	1-18
1-16	Steering System	1-19
1-17	Mast and Pivot/Shift Assembly	1-20
1-18	Brake System	1-22
1-19	Wheels and Tires	1-23

www.truck-freeworkshop.com

Section I. GENERAL INFORMATION

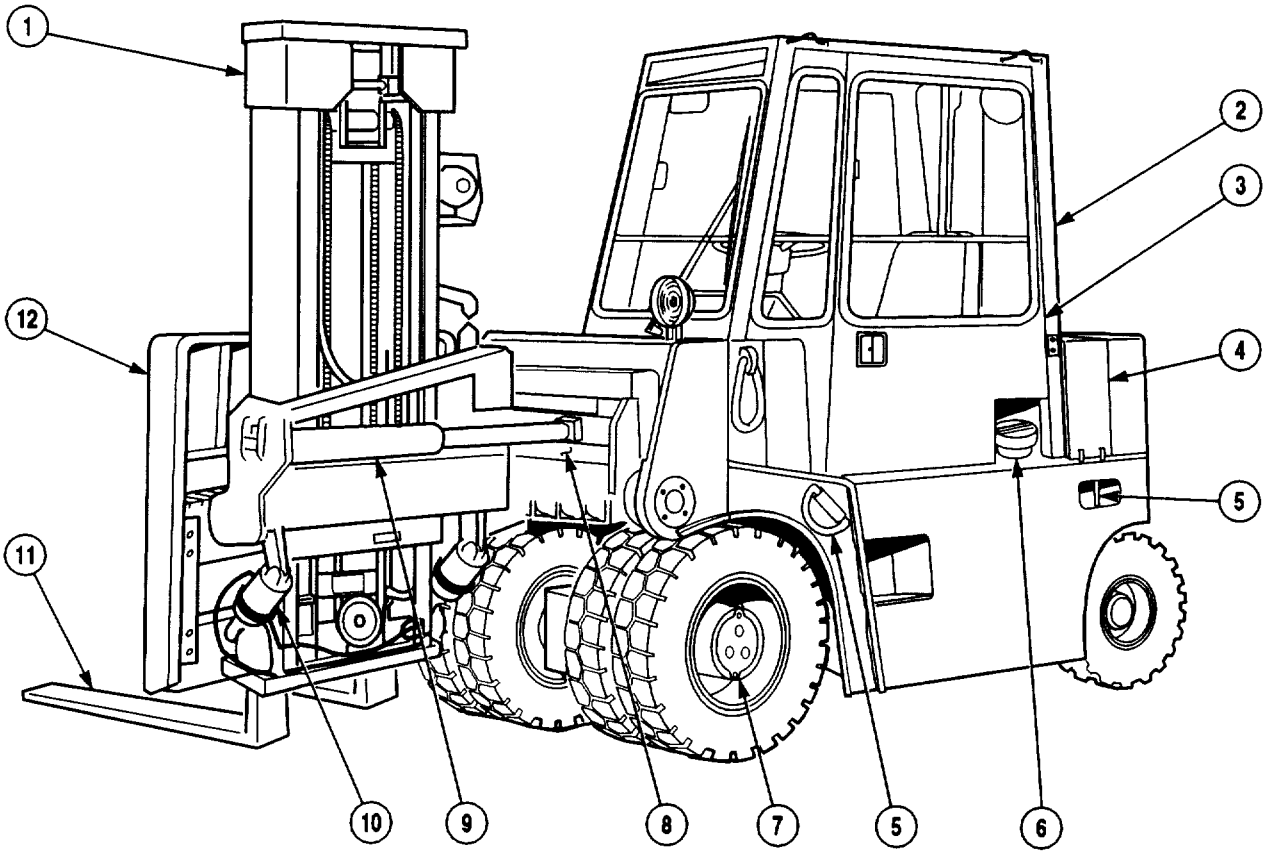

1. Mast Assembly
2. Cab
3. Cab Door
4. Left Rear Engine Access Cover
5. Tie Down Points
6. Fuel Tank
7. Drive Axle
8. Shift Cylinder
9. Pivot Cylinder
10. Tilt Cylinders
11. Forks
12. Carriage Assembly

Figure 1-1. Truck, Lift, Fork - Left Front View

www.truck-freeworkshop.com

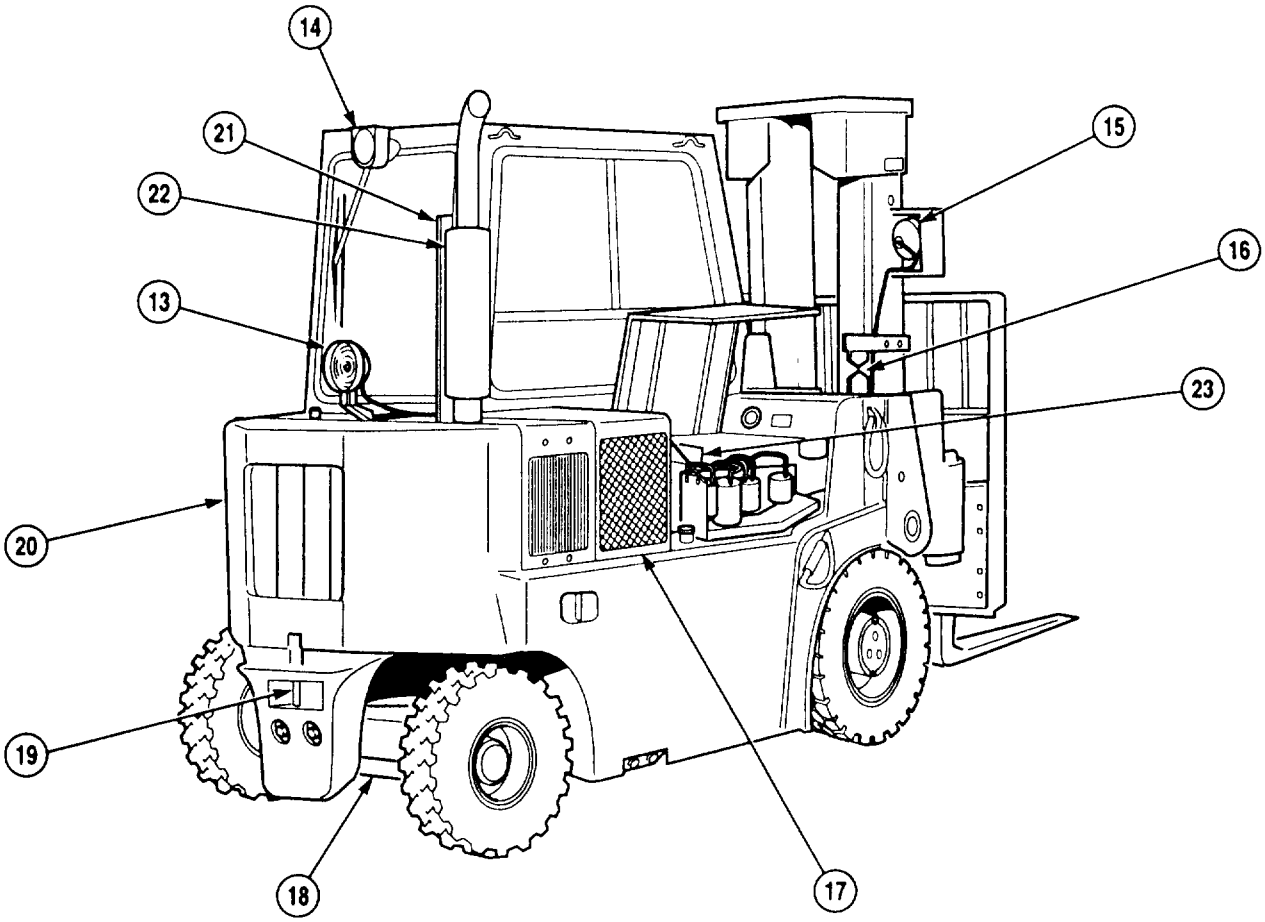

13. Rear Flood Light
14. Taillight
15. Front Flood Light
16. Mast Level Indicator
17. Engine Panel
18. Steer Axle
19. Tow Pin
20. Counterweight
20. Counterweight
21. Load Rest
22. Exhaust Muffler
23. Battery Box

Figure 1-2. Truck, Lift, Fork - Right Rear View

1-1. SCOPE.

a. Type of Manual. This manual is used for unit maintenance of the Truck, Lift, Fork.

b. Model Number and Equipment Name. Truck, Lift, Fork, NSN 3930-01-378-7497, produced by Drexel Industries, Inc. of Pennsylvania, Model R60SL-DC. (See Figures 1-1 and 1-2.)

c. Purpose of Equipment. The Truck, Lift, Fork, hereinafter referred to as the forklift, is designed to operate as a conventional, counterbalanced, front-loading forklift with the additional capability of operating as a side-loading forklift.

www.truck-freeworkshop.com

1-2. MAINTENANCE FORMS, RECORDS, AND REPORTS.

Department of the Army forms and procedures used for equipment maintenance will be those prescribed by DA PAM 738-750, The Army Maintenance Management System (TAMMS) (Maintenance Management UPDATE).

1-3. DESTRUCTION OF ARMY MATERIAL TO PREVENT ENEMY USE.

Command decision, according to the tactical situation, will determine when the destruction of the forklift will be accomplished. A destruction plan will be prepared by the using organization unless one has been prepared by a higher authority. For general destruction procedures for this equipment, refer to TM 750-244-6, Procedures for Destruction of Tank-Automotive Equipment to Prevent Enemy Use (U.S. Army Tank-Automotive Command).

1-4. PREPARATION FOR STORAGE OR SHIPMENT.

Refer to Chapter 2, Section VI, of this manual for Preparation for Storage or Shipment.

1-5. OFFICIAL NOMENCLATURE, NAMES, AND DESIGNATIONS.

Common Name	Official Nomenclature
Forklift	Truck, Lift, Fork, Clean Burn Diesel, Front/Side Loading, 6,000 LB. Capacity, Model R60SL-DC Part No. 1402517

1-6. REPORTING EQUIPMENT IMPROVEMENT RECOMMENDATIONS (EIR).

If your 6,000 lb forklift needs improvement, let us know. Send us an EIR. You, the user, are the only one who can tell us what you don't like about our equipment. Let us know why you don't like the design. Put it on an SF 368 (Product Quality Deficiency Report). Mail it to us at Commander, US Army Tank-automotive and Armament Command, ATTN: AMSTA-TR-E/MPA, Warren, MI 48397-5000. A reply will be furnished to you.

1-7. WARRANTY INFORMATION.

The warranty starts on the date found in block 23, DA Form 2408-9 in the logbook. Report all defects in material and workmanship to your supervisor, who will take the appropriate action. See Appendix A for Warranty information.

1-8. CORROSION PREVENTION AND CONTROL.

Corrosion Prevention and Control (CPC) of Army materials is a continuing concern. It is important that any corrosion problems with the forklift be reported so that the problem can be corrected and improvements can be made to prevent the problem in the future.

www.truck-freeworkshop.com

While corrosion is typically associated with rusting of metals, corrosion can also include deterioration of other materials, such as rubber and plastic. Unusual cracking, softening, swilling, or breaking of these materials may be a corrosion problem.

If a corrosion problem is identified, it can be reported using Standard Form 368, Product Quality Deficiency Report. Use of key words such as "corrosion, rust, deterioration, and cracking" will ensure that the information is identified as a CPC problem.

The form should be submitted to the address specified in DA PAM 738-750.

Section II. EQUIPMENT DESCRIPTION AND DATA

1-9. EQUIPMENT CHARACTERISTICS, CAPABILITIES, AND FEATURES.

Refer to TM 10-3930-669-10 for Equipment Characteristics, Capabilities, and Features.

1-10. LOCATION AND DESCRIPTION OF MAJOR COMPONENTS.

Refer to TM 10-3930-669-10 for Location and Description of Major Components.

1-11. EQUIPMENT DATA.

Refer to TM 10-3930-669-10 for Equipment Data.

www.truck-freeworkshop.com

Section III. PRINCIPLES OF OPERATION

1-12. POWER TRAIN.

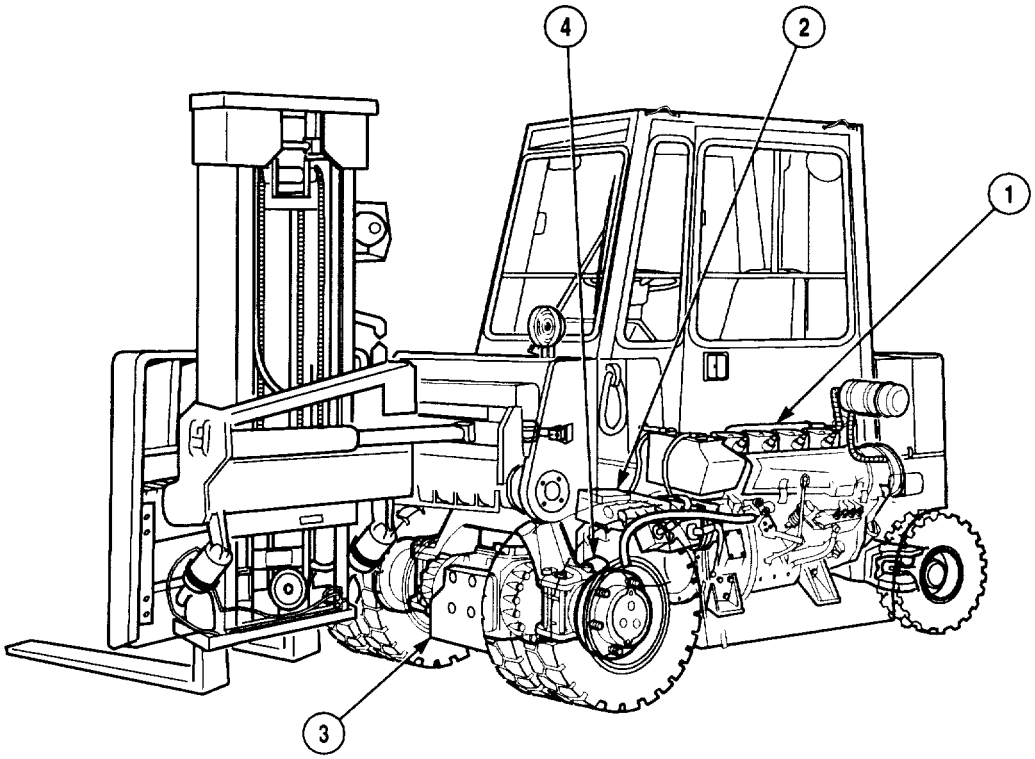

The forklift is powered by an air-cooled diesel engine (1) coupled directly to a semi-automatic transmission (2). Power from the transmission is transferred to the drive axle (3) through a short drive shaft (4) with two universal joints.

a. Engine. The forklift is equipped with a KHD Deutz diesel Model F4L912D/W engine rated at 60 HP (44 kilowatt) at 2,500 RPM. This engine is air cooled.

b. Transmission. The forklift is equipped with a Borg Warner Model PR-2 two-speed, semi-automatic transmission. Forward low range, forward high range, reverse, and neutral functions are controlled by an electric solenoid-controlled valve body. Power is transmitted by constant-mesh helical gears and multiple-disc clutch packs.

(1) The transmission control lever located on the steering column operates two switches sending voltage to the electric solenoids controlling transmission functions.

(a) To select the forward position for the transmission, move the control lever to the forward position.

(b) To select the reverse position for the transmission, move the control lever to the rearward position.

www.truck-freeworkshop.com

(c) To select the neutral position for the transmission, move the control lever to the center position.

(2) The high/low range selector switch is located on the right side of instrument panel. The electric control rocker switch controls a solenoid in the transmission. This solenoid switches the transmission INTO high range when energized. The truck should normally be operated in high range only. Changing from one range to the other is accomplished by pushing the transmission range control button. The high range light will light on the instrument panel when high range is selected.

c. Drive Axle. The forklift is equipped with a Clark-Hurth Model 172 drive axle. This drive axle features gear reduction at the wheel ends and is equipped with wet brake discs that serve as the service brakes.

d. Inching System. The inching system works with both the drivetrain and the brake system. The inching system permits extremely slow movement for precise load positioning. Light brake application at slow engine speeds activates the inching solenoid valve. This reduces the hydraulic pressure actuating the hydraulic clutch pack allowing the clutches to slip and the machine to be inched..

www.truck-freeworkshop.com

1-13. ENGINE SYSTEMS.

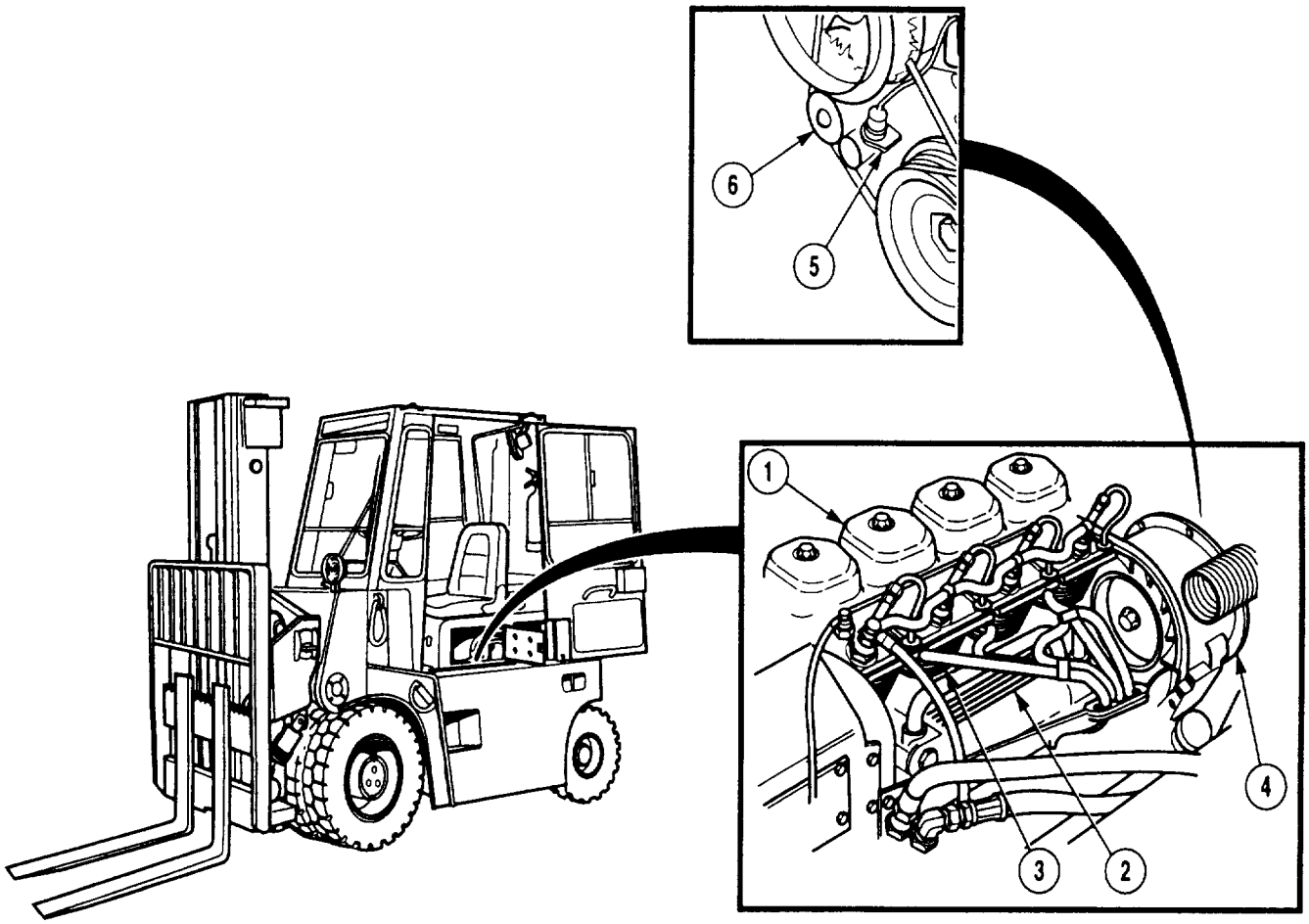

a. Cooling System. The cooling system protects the engine (1) from excess operating temperatures by removing heat generated during the combustion process. Air is drawn through the engine oil-to-air cooler (2) and then past the engine cooling fins (3) by a belt-driven blower (4). A sensor (5) is located on the blower belt tensioner (6). This sensor will send voltage to a warning buzzer and a warning light on the instrument panel when the blower belt breaks or comes off its pulleys.

www.truck-freeworkshop.com

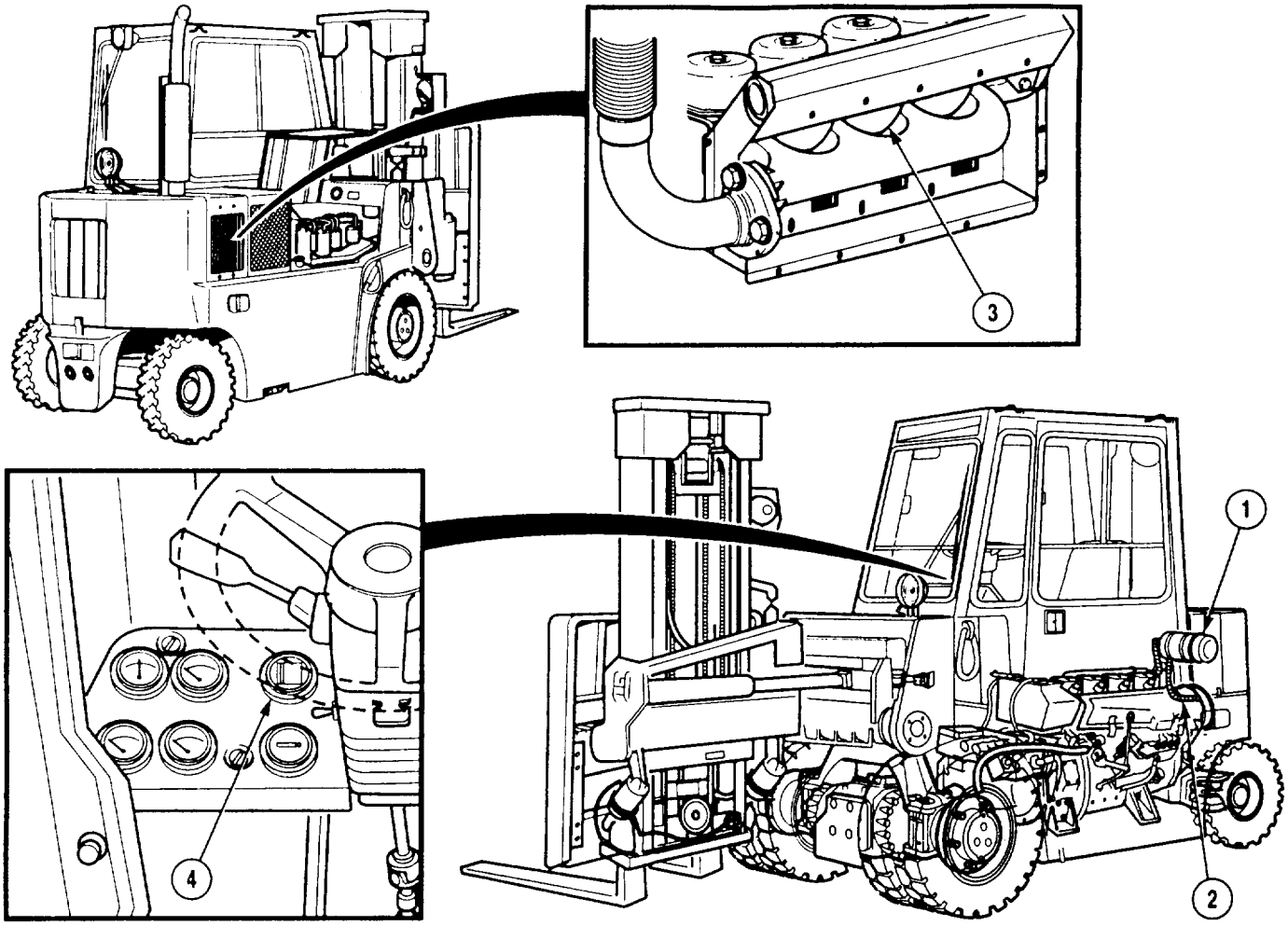

b. Air Intake System. The air intake system consists of a dry-type filter contained in an air cleaner (1), ducting (2), and the engine intake manifold (3). Condition of the air filter is monitored using the air filter indicator (4).

www.truck-freeworkshop.com

1-13. ENGINE SYSTEMS (CONT).

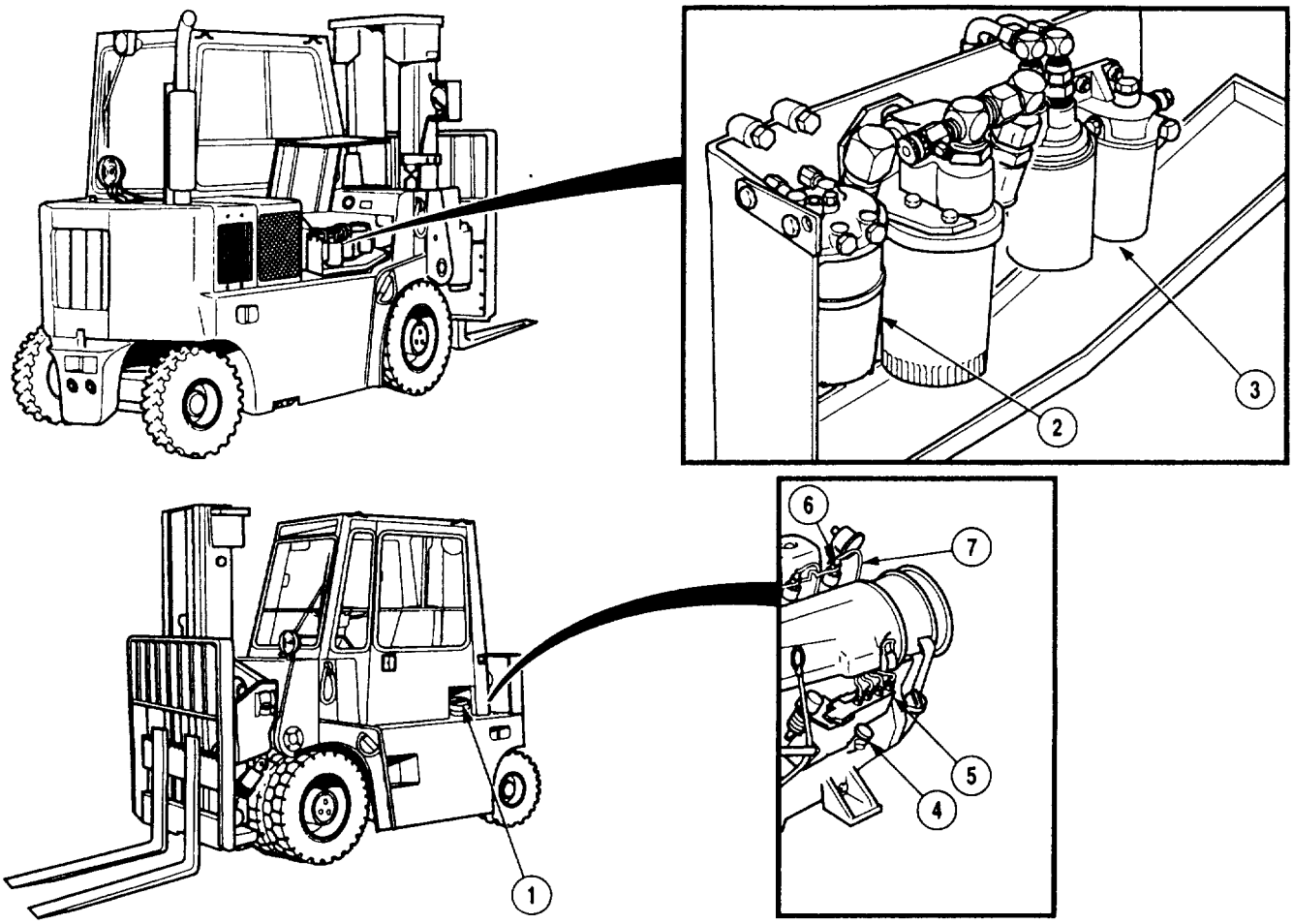

c. Fuel System. The fuel system consists of the fuel tank (1), fuel/water separator (2), fuel filter (3), feed pump (4), injection pump (5), and injectors (6). The fuel tank (1) is located on the LH side of the forklift and has a capacity of 14 gallons. The fuel/water separator (2) removes water and large contaminants from the fuel. Finer contaminants are removed by the fuel filter (3). The feed pump (4) supplies fuel to the injection pump (5) which distributes the fuel to the injectors (6). Surplus fuel is returned to the fuel tank (1) through return lines (7).

www.truck-freeworkshop.com

1-14. ELECTRICAL SYSTEM.

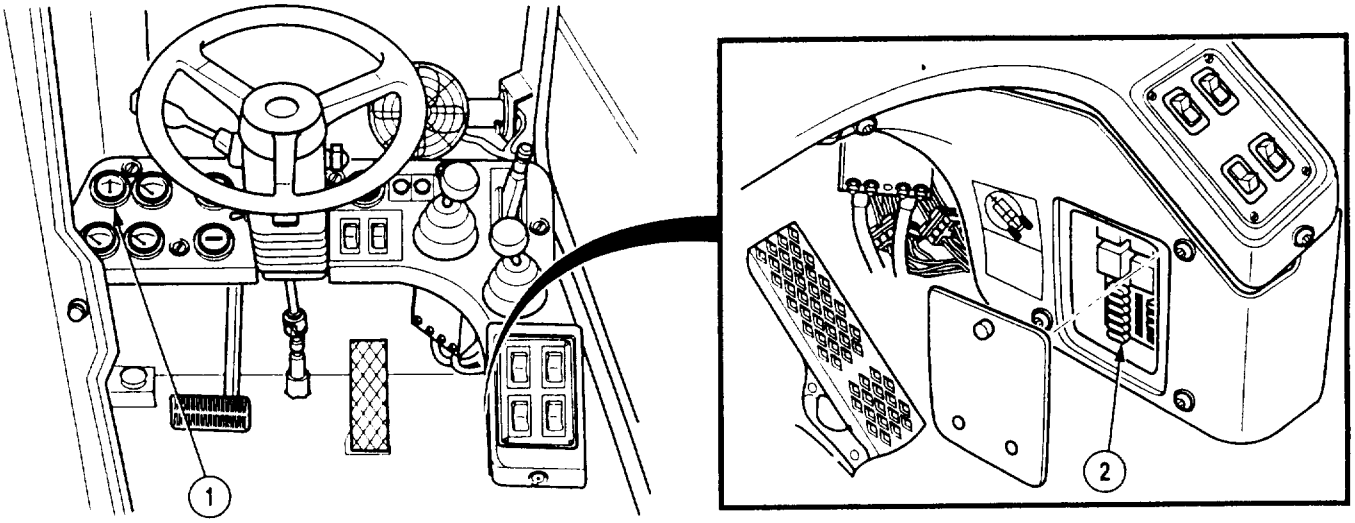

a. Electrical System. The forklift is equipped with a 24-volt electrical system. Status of the electrical system can be monitored by an ammeter gauge (1) located on the instrument panel inside the cab. A fuse panel (2) located under the instrument panel protects electrical circuits.

www.truck-freeworkshop.com

1-14. ELECTRICAL SYSTEM (CONT).

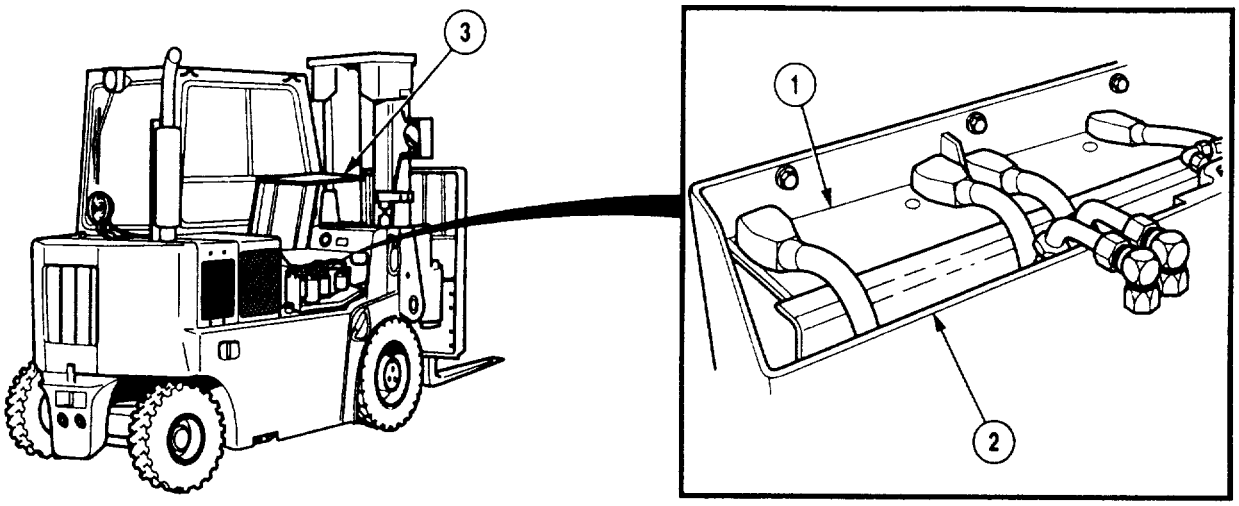

b. Battery. The electrical system is equipped with two 12-volt batteries (1). The batteries are contained in a battery box (2) located on the right-hand side of the forklift under the engine access cover (3). This location provides protection from the environment while allowing convenient access for service.

www.truck-freeworkshop.com

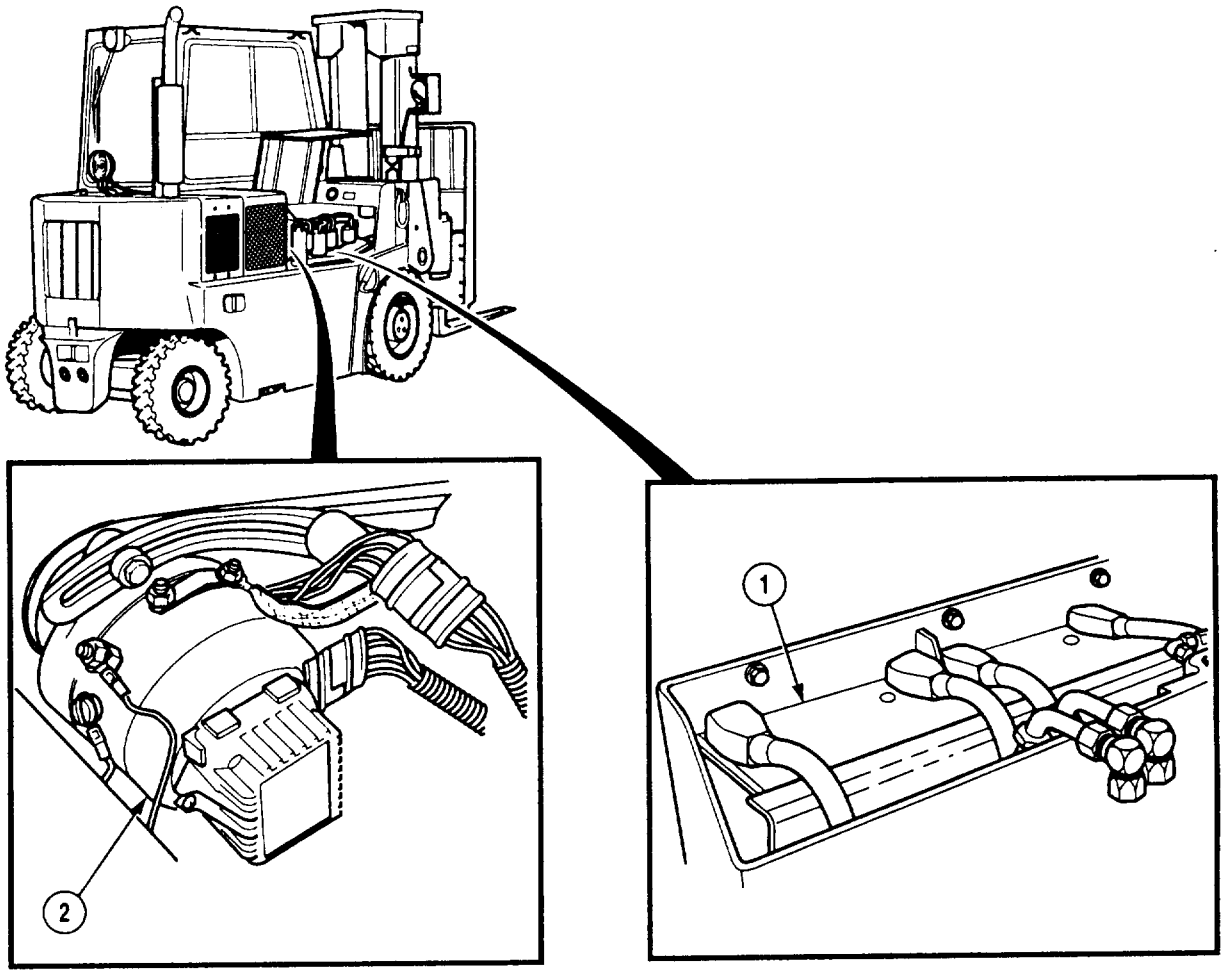

c. Power Storage and Generating. The forklift's 12-volt batteries (1) have the capability of storing electrical power. The batteries can power all of the systems for a limited time while the engine is not running, but their primary purpose is to supply voltage to the engine's starting system. Once the engine is running, the generating system provides the electrical power for all systems. The engine-driven alternator (2) generates alternating current (AC) which is passed through a set of rectifiers that change it into direct current (DC). This direct current is used to charge the batteries (1) and is distributed to the other systems of the forklift.

www.truck-freeworkshop.com

1-14. ELECTRICAL SYSTEM (CONT).

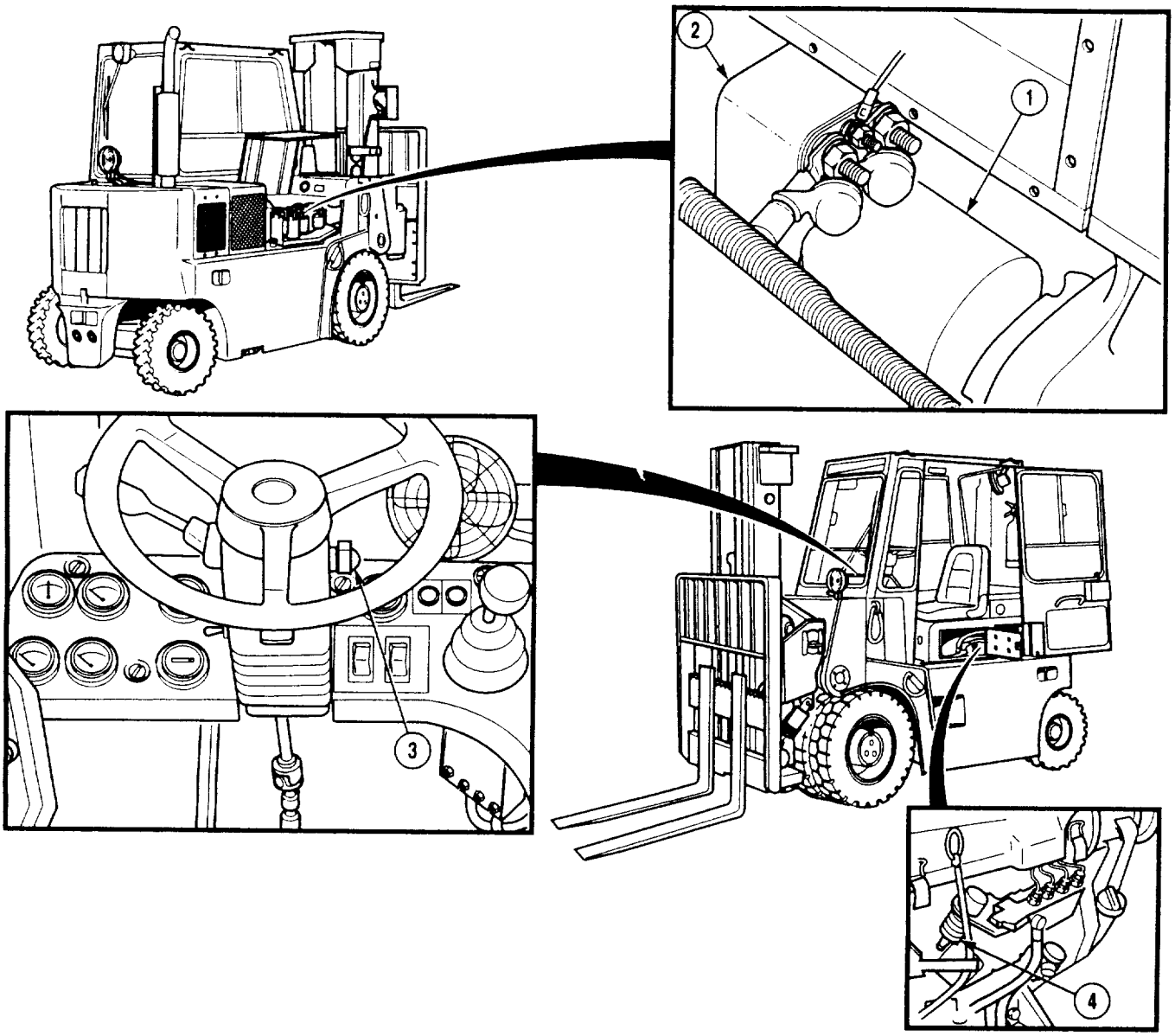

d. Engine Starting and Stopping. The engine starting system consists of a starter motor (1), solenoid (2), and engine switch (3). Battery voltage is used to operate the starter motor (1). The starter motor (1) is mounted on the engine and engages the flywheel only when electrically energized. When the engine switch (3) is turned to the OFF position, the fuel shutoff solenoid (4) is de-energized causing the injection pump to stop fuel supply to the injectors.

www.truck-freeworkshop.com

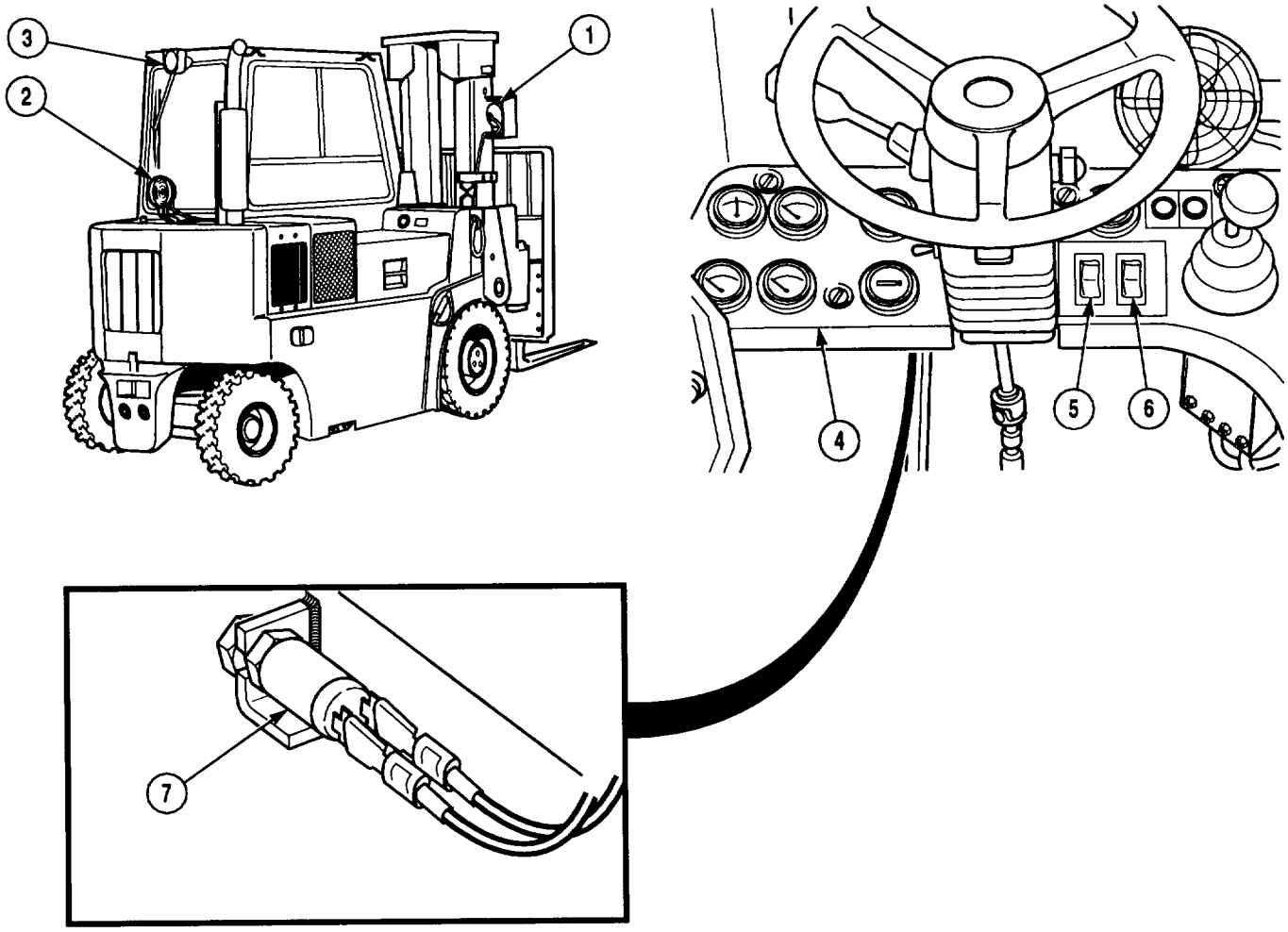

e. Service Lighting. The service lighting includes the front and rear flood lights (1 and 2), one taillight (3), and instrument panel (4) gauge lighting. The front flood light (1), taillight (3), and instrument panel (4) lights are all controlled by the front flood light rocker switch (5). The rear flood light (2) is controlled by the rear flood light rocker switch (6). The taillight is equipped with one dual-filament bulb serving as both the running light and the brake light. The brake light illuminates when it receives voltage from the brake light switch (7) mounted above the brake pedal linkage. Depressing the brake pedal operates the brake light switch (7) and illuminates the brake light.

www.truck-freeworkshop.com

1-14. ELECTRICAL SYSTEM (CONT).

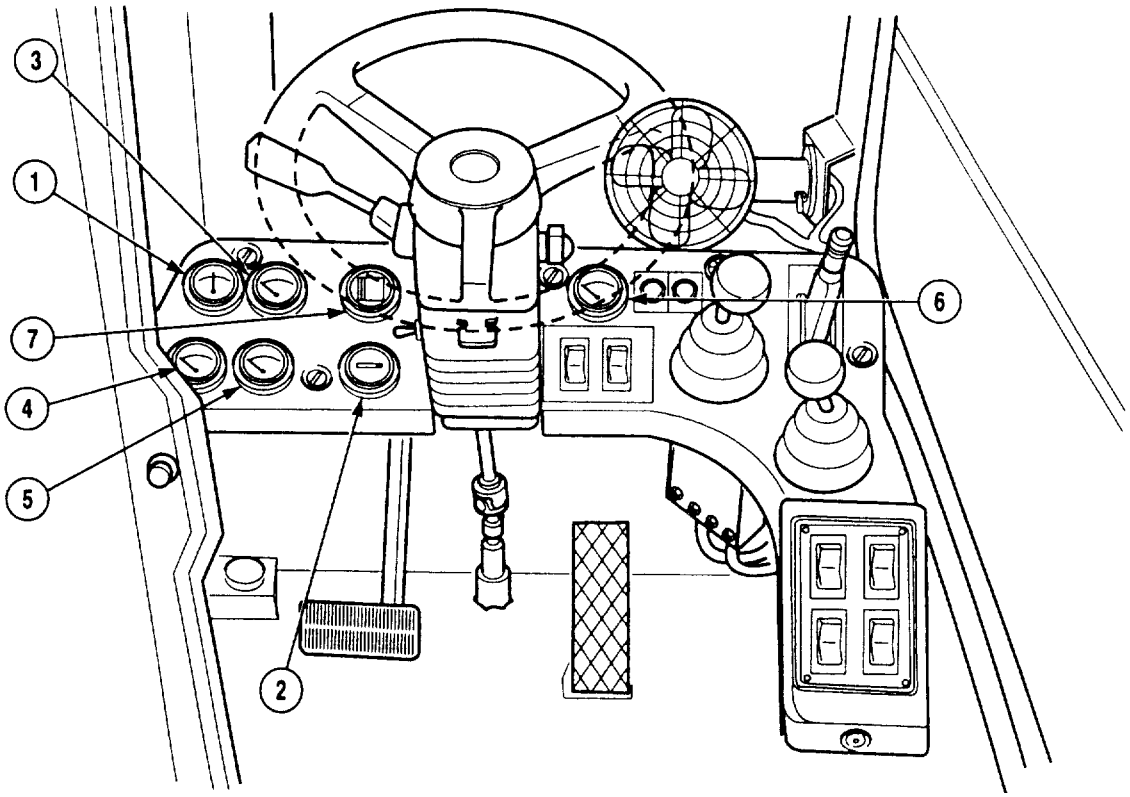

f. Instruments. All instruments are equipped with individual lamps for illumination and share a common circuit for power of these lamps. A common ground circuit is also shared for all instrument illumination. All instrumentation is fully operable when the main power switch and engine switch are on.

- **Ammeter** (1) receives voltage from the shunt and shares a common ground circuit with other instruments.
- **Hour meter** (2) receives voltage from the fuse panel and shares a common ground circuit with other instruments.
- **Fuel level gauge** (3) receives voltage from the fuse panel and is grounded at the sending unit mounted on the fuel tank.
- **Engine oil pressure gauge** (4) receives voltage from the fuse panel and is grounded at the sending unit mounted on the engine.
- **Engine temperature gauge** (5) receives voltage from the fuse panel and is grounded at the sending unit mounted on the engine.
- **Transmission oil temperature gauge** (6) receives voltage from the fuse panel and is grounded at the sending unit mounted on the transmission.
- **Air restriction indicator gauge** (7) indicates condition of air filter in inches of Hg. Red button is for resetting indicator.

www.truck-freeworkshop.com

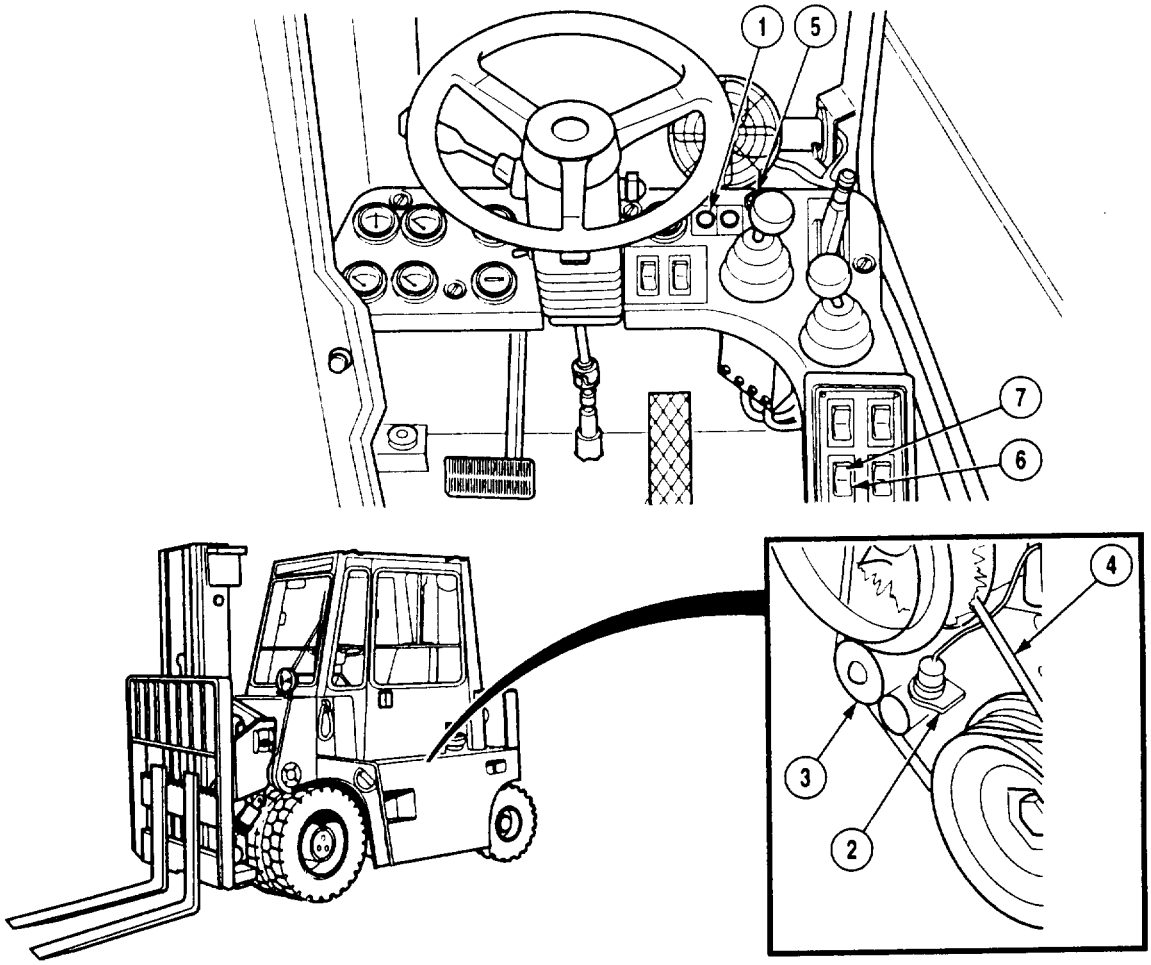

g. Warning Lights, Buzzers, and Indicator Lights.

- **Broken belt warning light** (1) is illuminated when the broken belt sensor (2) closes. The broken belt sensor (2) will close any time the tensioner (3) collapses as a result of the blower belt (4) breaking or coming off its pulleys. The broken belt warning light (1) is on the same electrical circuit as the broken belt warning buzzer (5).

- **Broken belt warning buzzer** (5) sounds when the broken belt sensor (2) closes. The broken belt sensor (2) will close any time the blower belt tensioner (3) collapses as a result of the blower belt (4) breaking or coming off its pulleys. The broken belt warning buzzer (5) is on the same electrical circuit as the broken belt warning light (1).

- **Transmission high range indicator light** (6) is illuminated any time the transmission is in high range. The indicator light (6) receives voltage from the high/low range switch (7).

www.truck-freeworkshop.com

1-15. HYDRAULIC SYSTEM.

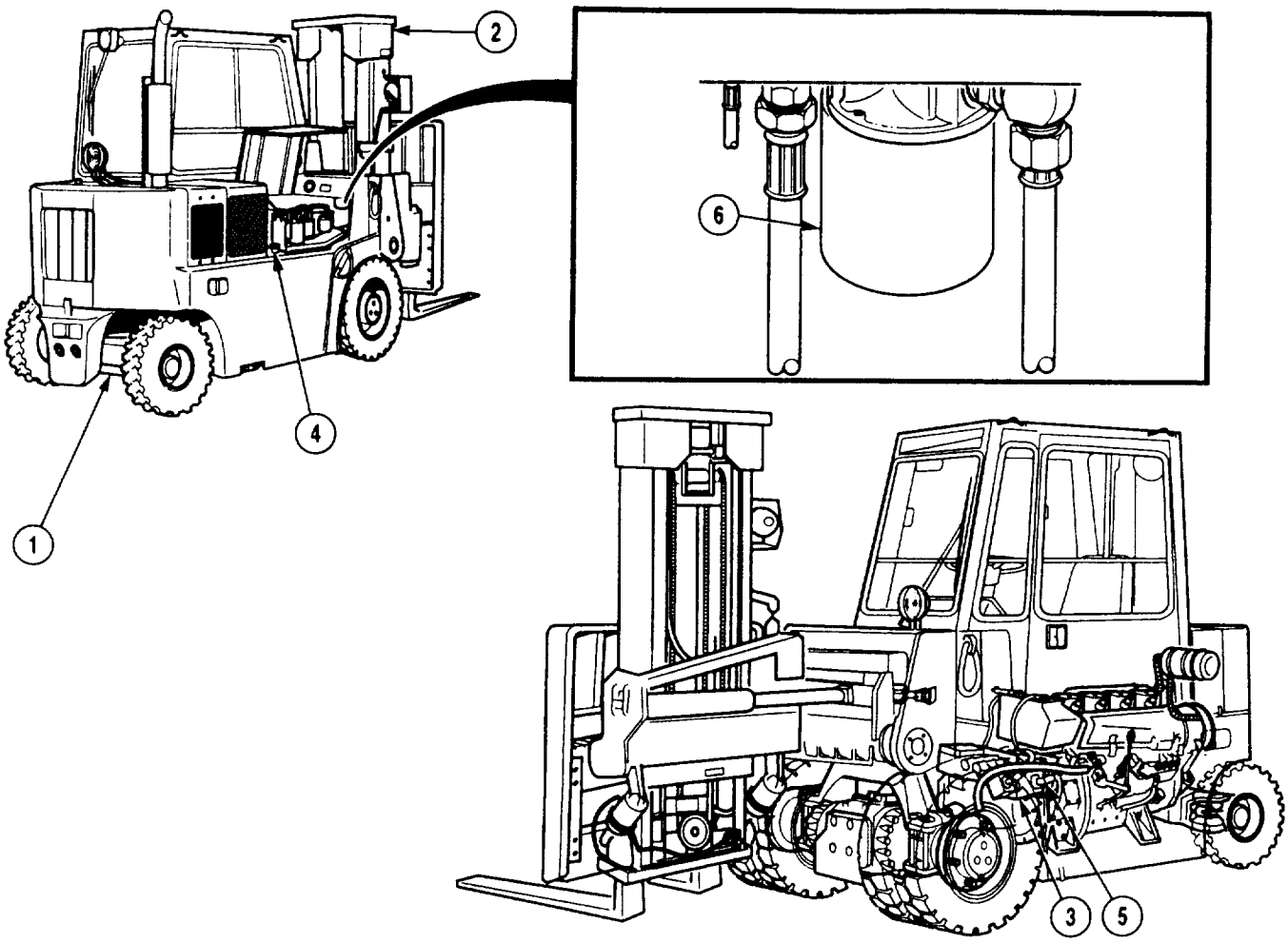

The hydraulic system supplies hydraulic oil pressure for steering (1) and mast (2) operation any time the engine is running. A pump (3) mounted on the transmission draws hydraulic fluid from the hydraulic tank (4) mounted on the RH side of the forklift. A priority valve (5) diverts hydraulic fluid to the mast (2) and steering (1) system by demand. Hydraulic fluid is filtered by a spin-on filter (6) immediately before returning to the hydraulic tank (4).

www.truck-freeworkshop.com

1-16. STEERING SYSTEM.

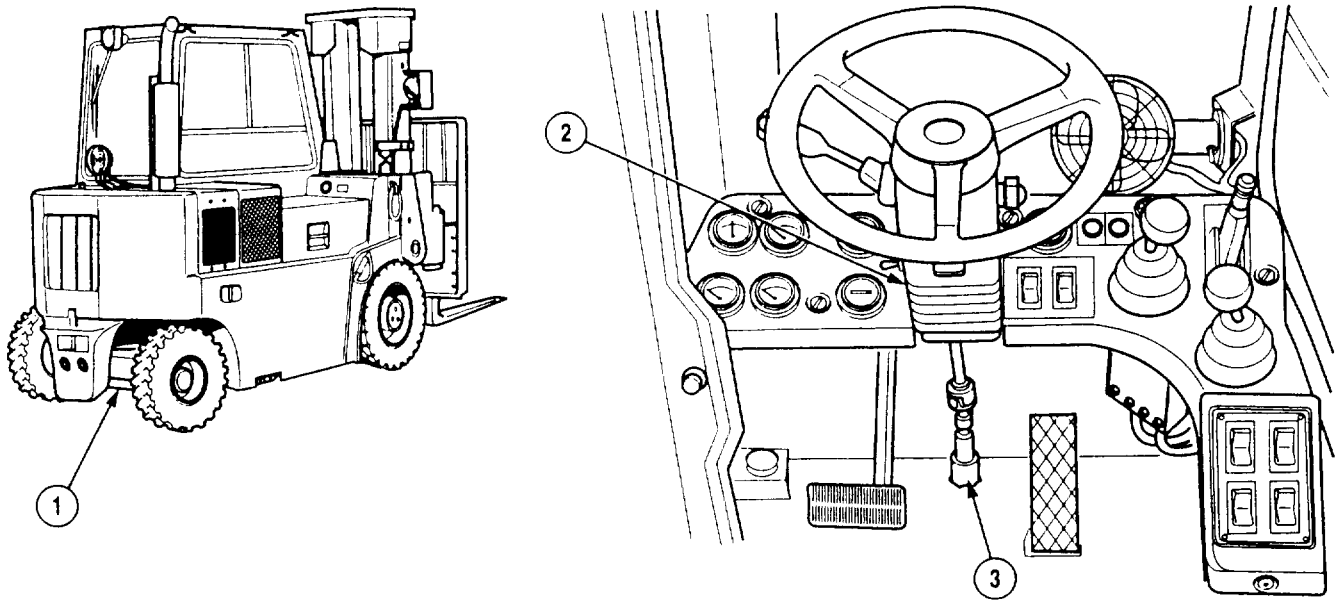

The steering axle (1) is mounted at the rear of the forklift and is hydraulically assisted any time the engine is running. Hydraulic oil pressure is provided by a transmission-mounted pump which is shared by the mast, pivot/shift assembly, and steering system. No mechanical linkages are used between the steering column (2) and the steering axle (1) for control of the steering axle (1). A steering gear (3) is connected to the steering column (2) and controls fluid flow from the pump to the steering axle (1).

www.truck-freeworkshop.com

1-17. MAST AND PIVOT/SHIFT ASSEMBLY.

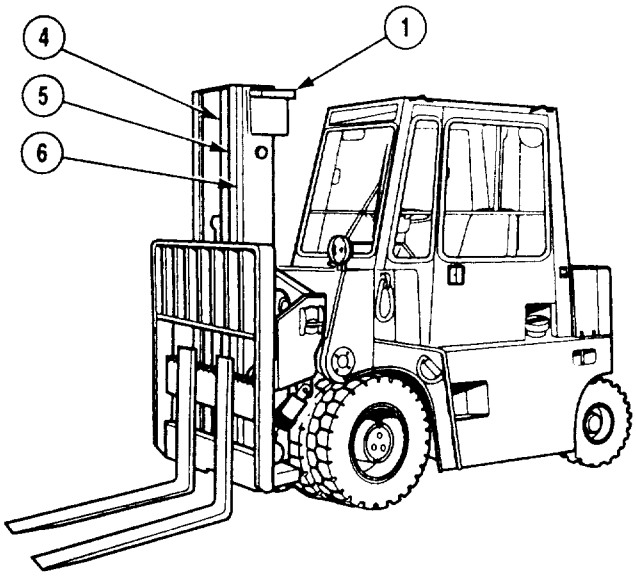

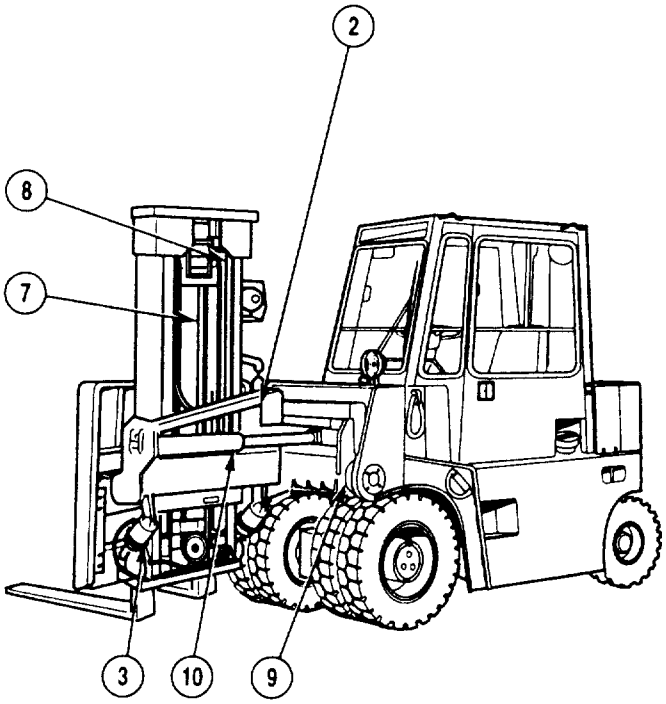

The mast assembly (1) is mounted to the pivot/shift assembly (2) and is capable of a 90-degree pivot to the right. Two tilt cylinders (3) make it possible to tilt the mast assembly (1) six degrees forward or back. The frame of the mast assembly (1) is made up of three separate rails: the inner rail (4), center rail (5), and outer rail (6). The mast assembly (1) is raised and lowered by the primary lift cylinder (7) and secondary lift cylinders (8) using chains and anchors to synchronize the movement of the three rails.

The pivot/shift assembly (2) allows side-to-side movement of the mast assembly (1) using one cylinder located behind the side shift rod (9). Additionally, the pivot cylinder (10) can pivot the mast 90 degrees to the right.

www.truck-freeworkshop.com

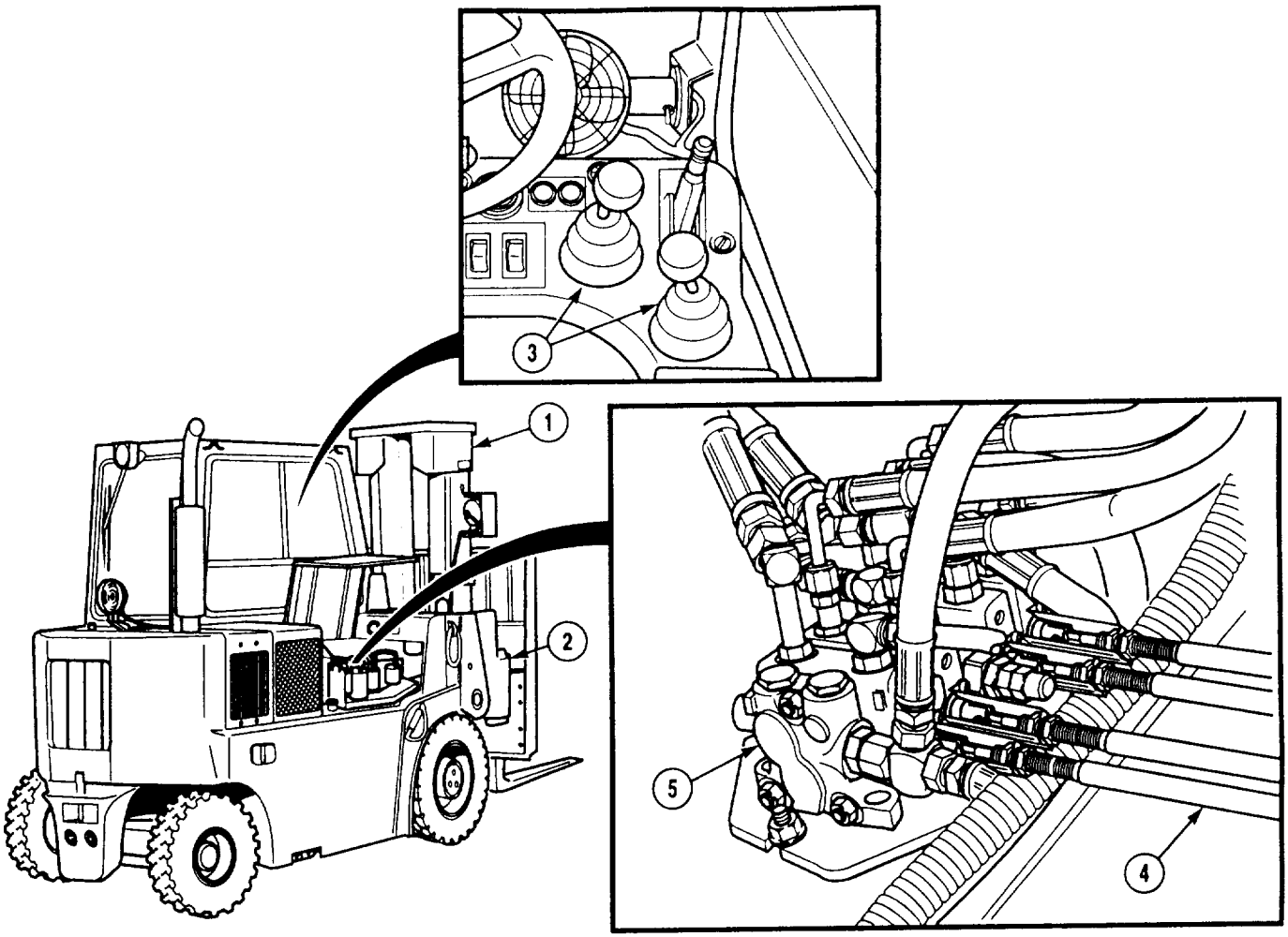

All functions of the mast assembly (1) and the pivot/shift assembly (2) are controlled by two joysticks (3) mounted in the cab. Joysticks (3) are connected by cables (4) to the stack valves (5) which direct flow to and from the mast assembly (1) and pivot/shift assembly (2). Hydraulic oil pressure is provided by a transmission-mounted pump which is shared by the steering system, mast assembly, and pivot/shift assembly.

www.truck-freeworkshop.com

1-18. BRAKE SYSTEM.

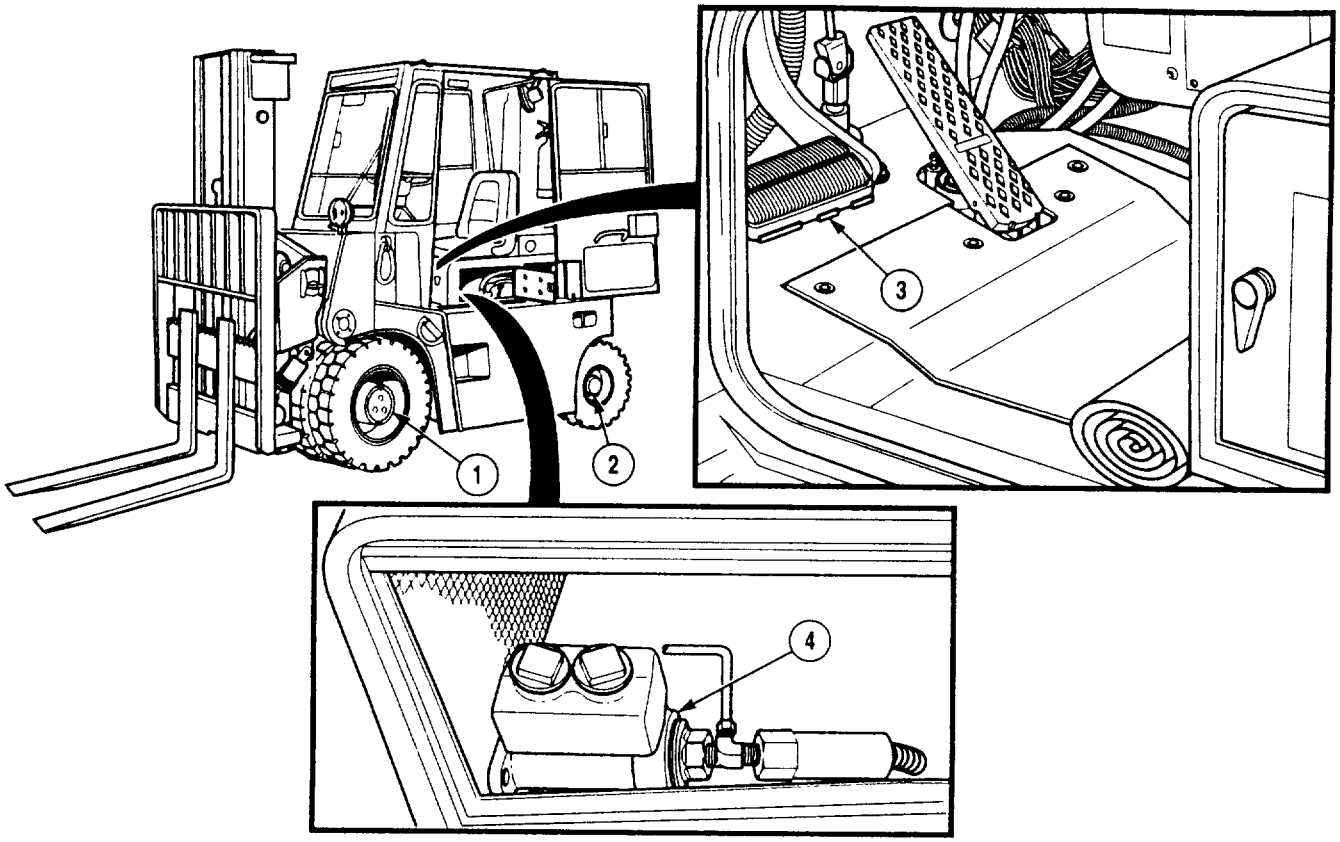

The forklift brakes are located inside the drive axle (1). The steering axle (2) is not equipped with brakes. Braking is controlled by the brake pedal (3) which is connected to the master cylinder (4) by a linkage. Additionally, the brake pedal (3) disengages the transmission automatically as the brakes are being applied.

www.truck-freeworkshop.com

1-19. WHEELS AND TIRES.

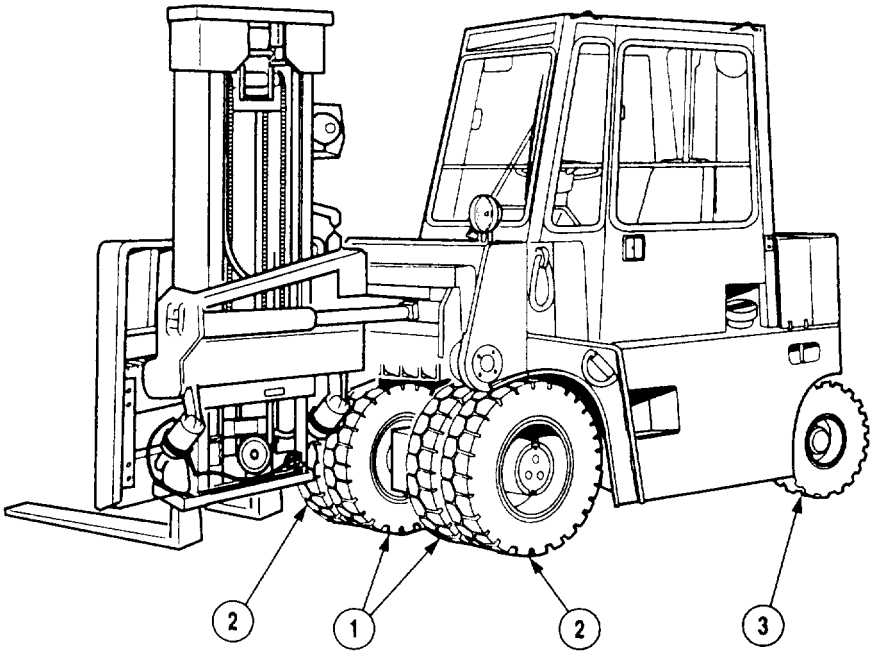

The drive axle is equipped with four wheel-and-tire assemblies (1 and 2), one inner (1) and one outer (2) per side. Inner and outer wheel-and-tire assemblies are not interchangeable because of a difference in wheel depth. The steering axle is equipped with two wheel-and-tire assemblies (3), one per side.

a. Drive Axle Wheel-and-Tire Assemblies. A wheel-and-tire assembly (1 or 2) consists of one tire and one wheel. The tire is solid, requiring no air.

b. Steering Axle Wheels. A wheel-and-tire assembly (3) consists of one tire and one wheel. The tire is solid, requiring no air.

www.truck-freeworkshop.com

CHAPTER 2

VEHICLE MAINTENANCE

Para	Contents	Page
	Section I. Repair Parts, Tools, Special Tools, Test, Measurement, and Diagnostic Equipment (TMDE), and Support Equipment	
2-1	Common Tools and Equipment	2-2
2-2	Special Tools, TMDE, and Support Equipment	2-2
2-3	Repair Parts	2-2
	Section II. Service Upon Receipt	
2-4	General Service Instructions	2-3
2-5	Inspection and Servicing Equipment	2-3
2-6	Special Service Instructions	2-4
	Section III. Preventive Maintenance Checks and Services (PMCS)	
2-7	PMCS Introduction	2-5
2-8	Leakage Definitions for PMCS	2-5
2-9	PMCS Tables	2-6
	Section IV. Troubleshooting	
2-10	Introduction to Logic Tree Troubleshooting	2-9
2-11	General Troubleshooting Instructions	2-10
2-12	Troubleshooting Procedures	2-13
2-13	Engine System Troubleshooting	2-13
2-14	Electrical System Troubleshooting	2-122
2-15	Transmission Troubleshooting	2-291
2-16	Drive Axle System Troubleshooting	2-331
2-17	Brake System Troubleshooting	2-389
2-18	Hydraulic System Troubleshooting	2-421
	Section V. Maintenance Procedures	
2-19	Maintenance Introduction	2-488
2-20	Ground Handling	2-488
2-21	General Removal Instructions	2-488
2-22	General Disassembly Instructions	2-489
2-23	General Cleaning Instructions	2-489
2-24	General Inspection Instructions	2-492
2-25	General Repair Instructions	2-492
2-26	General Assembly Instructions	2-493
2-27	General Installation Instructions	2-494
2-28	Adjustment	2-494
2-29	Placing In Service	2-495
	Section VI. Preparation for Storage or Shipment	
2-30	Preparation for Storage or Shipment Introduction	2-495
2-31	Preparation for Storage or Shipment	2-495
2-32	Storage Maintenance Procedures	2-495

www.truck-freeworkshop.com

Section I. REPAIR PARTS; SPECIAL TOOLS; TEST, MEASUREMENT, AND DIAGNOSTIC EQUIPMENT (TMDE); AND SUPPORT EQUIPMENT

2-1. COMMON TOOLS AND EQUIPMENT.

For authorized common tools and equipment, refer to the Modified Table of Organization and Equipment (MTOE), CTA 50-970 or CTA 8-100, as applicable to your unit. Table 2-1 lists tool kits required and authorized for use at the Unit Maintenance level. Reference code numbers listed in column one correspond to those listed in the same column on the Maintenance Allocation Chart (MAC).

Table 2-1. Authorized Unit Support Tool Kits

Tool or Test Equipment Ref Code	Maintenance Level	Nomenclature	Tool Kit Stock Number
1	O	Tool kit, general mechanic's: automotive	5180-00-177-7033
2	O	Shop equipment, automotive maintenance and repair: organizational maintenance common no. 1, less power	4910-00-754-0654
3	O	Shop equipment, automotive maintenance and repair: organizational maintenance supplemental no. 1, less power	4910-00-754-0653
11	O	Shop equipment, automotive maintenance and repair: field maintenance, basic	4910-00-754-0705

2-2. SPECIAL TOOLS, TMDE, AND SUPPORT EQUIPMENT.

The MAC identifies the authority and responsibility for maintenance tasks listed in this manual. Tool kits, test equipment, and diagnostic equipment required for performing maintenance tasks are also identified in the MAC. The forklift Repair Parts and Special Tools List (RPSTL), TM 10-3930-669-24P, lists special tools, TMDE, and support equipment required to perform maintenance procedures contained in this manual.

2-3. REPAIR PARTS.

Repair parts are listed and illustrated in the Repair Parts and Special Tools List, TM 10-3930-669-24P, for maintenance of this equipment.

www.truck-freeworkshop.com

Section II. SERVICE UPON RECEIPT

2-4. GENERAL SERVICE INSTRUCTIONS.

a. Refer to TM 10-3930-669-10 for operating instructions for the forklift.

b. Upon receipt of a new, used, or reconditioned forklift, the receiving organization must see if it has been properly prepared for service and is in good condition (TM 10-3930-669-10). Inspect all assemblies, subassemblies, and accessories to be sure they are in proper working order. Secure, clean, correctly adjust, and/or lubricate (LO 10-3930-669-12) as needed.

c. Follow general procedures for all services and inspections given in TM 10-3930-669-10 .

2-5. INSPECTION AND SERVICING EQUIPMENT.

NOTE

If forklift has been driven to the using organization, most or all of the following work should have been done.

a. When forklift is received, inspect all items for damage that may have occurred during shipping and unloading operations. Pay close attention to any loose or missing nuts, bolts, screws, access plates, drain plugs, draincocks, oil plugs, assemblies, subassemblies, or components that may have been lost or broken in transit.

WARNING

- **Drycleaning solvent (P-D-680) is TOXIC and flammable. Wear protective goggles and gloves; use only in a well-ventilated area; avoid contact with skin, eyes, and clothes; and do not breathe vapors. Keep away from heat or flame. Never smoke when using solvent; the flashpoint for type I drycleaning solvent is 100°F (38°C) and for type II is 138°F (50°C). Failure to do so may result in injury or death to personnel.**

- **If personnel become dizzy while using cleaning solvent, immediately get fresh air and medical help. If solvent contacts skin or clothes, flush with cold water. If solvent contacts eyes, immediately flush eyes with water and get immediate medical attention.**

b. Clean all exterior surfaces coated with rust-preventive compound with drycleaning solvent.

c. Lubricate specific points shown in LO 10-3930-669-12 regardless of interval. Do not lubricate gear cases or engine. Check processing tag for gear case and engine oil. If tag states the oil is good for 500 miles (805 km) of operation and is of the proper grade for local climatic operation, check oil level but do not change oil.

www.truck-freeworkshop.com

2-6. SPECIAL SERVICE INSTRUCTIONS.

a. Forklift Body and Panel Inspection.

(1) Inspect body and panels for evidence of damage during shipment.

(2) Check doors, latches, and hinges on compartments for proper operation.

(3) Check mounting hardware and tighten as necessary.

b. Forklift Cab Inspection.

(1) Inspect cab for evidence of damage during shipment.

(2) Inspect windshields and window glass for cracks or other damage.

(3) Check door latches, hinges, and windows for proper operation.

(4) Check seat and seat belts to ensure they are securely installed and that operator's seat adjustment controls are functioning properly.

c. Engine Inspection.

(1) Remove any seals, plugs, or tape used to seal air inlets and ports on the engine during shipping.

(2) Check crankcase oil level with dipstick.

(3) Examine air cleaner element for dirty or restricted condition.

(4) Inspect engine for evidence of leakage.

(5) Remove any obstruction of cooling air flow to cooling blower.

d. Transmission Inspection.

(1) Check fluid level with dipstick.

(2) Check external hoses and tubes for evidence of leakage.

e. Electrical System Inspection.

(1) Inspect battery cable connections and clean and tighten as necessary.

(2) Check lights for burned out lamps, loose connections, and dirty or broken lenses.

(3) Ensure alternator is charging properly.

(4) Ensure all electrical equipment functions.

www.truck-freeworkshop.com

f. Steering System Inspection.

(1) Examine steering hoses and connections for evidence of leakage.

(2) Check steering system for proper operation during road test.

g. Tire Inspection.

(1) Inspect tires for serious cuts, bubbles, cracks, bruises, dry-rot, foreign objects, or exposure of internal cords.. Remove foreign objects lodged between treads.

(2) Check all wheel mounting nuts for proper torque (Para 12-2).

h. Fuel System Inspection.

(1) Check fuel level and add fuel if necessary.

(2) Inspect fuel hoses, tubes, connections, and filters for evidence of leakage.

i. Hydraulic System Inspection.

(1) Check all hydraulic hoses, tubes, cylinders, and connections for evidence of leakage.

(2) Check mast assembly for proper operation (TM 10-3930-669-10).

j. Drive Axle Cooling System Inspection.

(1) Check drive axle oil cooler for leaks.

(2) Check drive axle oil cooler hoses for evidence of leakage.

Section III. PREVENTIVE MAINTENANCE CHECKS AND SERVICES (PMCS)

2-7. PMCS INTRODUCTION.

This section contains PMCS requirements for the forklift. The PMCS tables contain checks and services necessary to ensure the forklift is ready for operation. Using the PMCS tables, perform maintenance at the specified intervals. Perform PMCS in TM 10-3930-669-10 before performing PMCS in this section.

2-8. LEAKAGE DEFINITIONS FOR PMCS.

It is necessary for you to know how fluid leakage affects the status of the forklift. The following are types/classes of leakage necessary for determining status of forklift. Learn these leakage definitions and remember - when in doubt, notify your supervisor.

www.truck-freeworkshop.com

2-8. LEAKAGE DEFINITIONS FOR PMCS (CONT).

CAUTION

- Equipment operation is allowable in some cases with minor leakages (Class I or II). Of course, consideration must be given to fluid capacity in the item/system being checked/inspected. When in doubt, notify your supervisor.
- When operating with Class I or II leaks, continue to check fluid levels as required in your PMCS.
- Class III leaks should be reported to your supervisor.

(1) CLASS I - Seepage of fluid (as indicated by wetness or discoloration) not great enough to form drops.

(2) CLASS II - Leakage of fluid great enough to form drops but not enough to cause drops to drip from item being checked/inspected.

(3) CLASS III - Leakage of fluid great enough to form drops that fall from item being checked/inspected.

2-9. PMCS TABLES.

The PMCS table is arranged in columns that identify which item is being inspected/serviced, when an item should be inspected/serviced, where the item is located, and the procedures necessary to inspect/service the item. Report all faulty items found during PMCS, that must be repaired or replaced at a higher maintenance level, on DA Form 2404. Also, report faulty items to your supervisor.

a. Item No. The Item No. column provides a logical sequence for performing the PMCS tasks. Record the Item No. of any faulty item that must be repaired or replaced at a higher maintenance level on DA Form 2404.

b. Interval The Interval column provides the appropriate time interval for performing each task. This column lists the time intervals within which the tasks should be performed. Intervals are broken into two groups: months of operation and hours of operation. In all cases, checks of items in the PMCS table should be performed under whichever interval occurs first.

c. Item to Check/Service. This column lists the name of the item to be inspected/serviced and its location on the vehicle.

d. Procedure. The Procedure column provides instructions necessary to accomplish the inspection/service. It also lists important Warnings, Cautions, and Notes related to each task. If a task is covered elsewhere in manual, it is referenced by paragraph number.

e. Not Fully Mission Capable If: This column tells you what faults will keep your equipment from being capable of performing its primary mission. If checks and services show faults listed in this column, do not operate the equipment. Follow standard operating procedures for maintaining the equipment or reporting equipment failure.

www.truck-freeworkshop.com

Table 2-2. Preventive Maintenance Checks and Services

Item No.	Interval Mo/Hr	Location Item to Check/Service	Procedure	Not Fully Mission Capable If:
		Body. Cab. and Hull		
1	12/1,000	Frame	Check for broken or cracked welds.	
2	12/1,000	Mounting Brackets	Check for cracks, breaks, rust, or looseness.	
3	12/1,000	Cab and Mounting Pads	Check for cracks in weldments or metal on structure, loose or missing screws, worn or damaged rubber mounting pads, and corrosion.	
		Engine		
4	6/500	Intake Manifold	Check for damaged pipes, loose clamps, and blown gaskets or seals.	
5	6/500	Exhaust Manifold	Check for damaged pipes, loose clamps, and blown gaskets or seals.	
6	6/500	Muffler	Check muffler for looseness or leaks. Check for damaged pipes, loose clamps, and blown gaskets or seals.	
7	6/500	Alternator	Check that ventilation slots and air spaces are clear and unobstructed.	
8	6/500	Fuel Filters	Change fuel filters (Para 4-8).	
9	2/100	Engine Cooling Fins	Check cooling fins for restriction.	
10	6/500	Batteries	Check battery electrolyte level. Refer to TM 9-6150-200-14.	

www.truck-freeworkshop.com

2-9. PMCS TABLES (CONT).

Table 2-2. Preventive Maintenance Checks and Services - CONT.

Item No.	Interval Mo/Hr	Location Item to Check/Service	Procedure	Not Fully Mission Capable If:
		Transmission		
11	12/1,000	Oil Cooler Lines and Fittings	Check cooler for signs of leakage, damage, or loose mounting screws.	
12	12/1,000	Transmission Mounts	Check transmission mounting screws for tightness.	
		Steer Axle		
13	3/250	Steering Axle	Check all structural parts for excessive wear, broken welds, and a bent or otherwise damaged axle.	
		Drive Axle		
14	3/250	Drive Axle	Check drive axle mounting brackets for cracks, breaks, rust, broken welds, loose mounting on frame, or missing hardware.	
15	6/500	Service Brakes	Check service brake adjustment.	

www.truck-freeworkshop.com

Section IV. TROUBLESHOOTING

2-10. INTRODUCTION TO LOGIC TREE TROUBLESHOOTING.

a. Page Layout. Troubleshooting procedures are divided into logic tree pages and test pages.

(1) A logic tree page is always a left-hand page, facing the test page on the right. The logic tree page provides the sequence of steps required to isolate a fault to a failed component. All critical information for decision making is on the left-hand page. Each logic tree page contains the following information:

(a) **INITIAL SETUP** - This box is located only on the first logic tree page of a fault. INITIAL SETUP lists tools, materials, references, personnel and equipment needed to troubleshoot the fault.

(b) **KNOWN INFO** - This box is located in the top left-hand column. KNOWN INFO lists conditions and information that will eliminate specific components as the cause of the fault.

(c) **POSSIBLE PROBLEMS** - This box is located directly below KNOWN INFO. All of the system components that could cause a fault are listed in the POSSIBLE PROBLEMS box. The first component listed in the POSSIBLE PROBLEMS box is the one that will be tested at that step in the logic sequence. When one of the components is tested and found to be operational, it is entered at the bottom of the KNOWN INFO box as OK.

(d) **QUESTION** - Each question, located in the middle column, refers to the first possible problem listed in POSSIBLE PROBLEMS. If the answer to the question is YES, proceed to the next step. If the answer is NO, follow the NO arrow to obtain directions for correcting the problem. If the step contains a WARNING or CAUTION message, a small shadow box is printed above the question. Text for WARNINGS and CAUTIONS is on the following right-hand page.

(e) **TEST OPTIONS** - This box is located directly below TEST OPTIONS. It explains the purpose for the question in the middle column.

(f) **REASON FOR QUESTION** - This box is located directly below TEST OPTIONS. It explains the purpose for the question in the middle column.

(2) A test page is always a right-hand page, facing the logic tree page on the left. The test provides detailed instructions for testing the first component listed in the POSSIBLE PROBLEMS box. This test will also provide an answer for the question in the middle column. Note the arrow connecting the test on the right-hand page to the REASON FOR QUESTION. When possible, illustrations are included to provide visual details. Warnings, cautions, and notes contain additional information for testing.

b. How to Begin Troubleshooting.

(1) Determine the symptom or condition that indicates a problem or failure. Troubleshooting is divided into symptoms peculiar to a system or a component, for example: hydraulic system or engine. Refer to the Troubleshooting Fault Index (Table 2-3) for a list of the systems covered in this section.

(2) Go to the referenced page to begin troubleshooting. Open the manual flat so both the left-hand and right-hand pages are displayed before you. The information on both pages is important to resolve the problem or failure. However, the experienced technician can follow the left-hand page instructions and refer to the right-hand page when necessary.

(3) Follow the diagnostic procedure. Answer question No. 1 on the left-hand page and follow the YES or NO path to either the remedy or the next question. If necessary, look on the right-hand page for test instructions and illustrations.

www.truck-freeworkshop.com

2-10. INTRODUCTION TO LOGIC TREE TROUBLESHOOTING (CONT).

(4) Observe warnings, cautions and notes. The formatting symbols used in this manual for warnings, cautions, and notes are as follows:

WARNING

This is the symbol for a warning statement. If you see the word WARNING above a question on the left-hand page, look on the right hand page for the test of the message. WARNINGS describe a situation which could cause severe injury or death to personnel.

CAUTION

This is the symbol for a caution statement. If you see the word CAUTION above a question on the left-hand page, look on the right-hand page for the text of the message. CAUTIONS describe a situation which could cause damage to equipment.

NOTE

This is the symbol for a note. Notes are located directly above the test to which they refer. Notes provide additional information for performing a test.

2-11. GENERAL TROUBLESHOOTING INSTRUCTIONS.

NOTE

The troubleshooting makes use of the Simplified Test Equipment for Internal Combustion Engines-Reprogrammable (STE/ICE-R) and conventional methods for testing and fault isolation.

a. Simplified Test Equipment for Internal Combustion Engines - Reprogrammable (STE/CE-R). STE/ICE-R tests are incorporated into the standard troubleshooting test to aid in fault isolation. The STE/ICE-R acts as a conventional digital multimeter to measure voltage, current, and resistance. It can also measure pressure, speed, compression unbalance, engine power, and some specialized battery and starter evaluations. The STE/ICE-R is powered by the forklift battery. The complete system includes a test meter (VTM), cables, transit case, and technical publications. The STE/ICE-R can make TK mode measurements while connected to the batteries. STE/ICE-R tests are referenced.

b. General Electrical Troubleshooting Procedures.

WARNING

Remove rings, bracelets, wristwatches, neck chains, etc., before working on any vehicle. Jewelry can catch on equipment and cause injury, or may short across an electrical circuit and cause severe burns or electrical shock.

www.truck-freeworkshop.com

CAUTION

Use proper sized test leads when checking for resistance, continuity, or voltage at connectors or damage to equipment can result.

NOTE

- Multimeter leads must remain in contact with the circuit being tested for a minimum of three seconds to obtain a reading.
- If your multimeter does not operate in the way described in the following steps, learn how it operates before performing troubleshooting.
- The piece of electrical test equipment used will be referred to as the "multimeter." The multimeter's red test lead will be referred to as the "positive (+) multimeter lead." The multimeter's black test lead will be referred to as the "negative (-) multimeter lead."

(1) Resistance and Continuity Measurements.

(a) Connect positive (+) multimeter lead to multimeter VOLT-OHM connector. Connect negative (-) multimeter lead to multimeter COM connector. When the multimeter leads are separated or are measuring a circuit with no continuity, the multimeter will indicate "OL" (Over Limit) on its display. When multimeter leads are connected together, multimeter should display "0," indicating a continuous circuit with no (zero) resistance.

(b) Set multimeter function/range switch to the desired ohm position. If the amount of the expected resistance is not known, set the switch to the highest range, then reduce until a satisfactory reading is obtained. If only continuity is to be checked, without regard to resistance, set the multimeter function/range switch to the highest ohm range.

(c) Always turn the main power switch to the OFF position before connecting multimeter leads to a circuit unless instructed to do otherwise in the troubleshooting procedure.

(d) Connect multimeter leads to the circuit being checked. The multimeter leads must only contact the point of measurement to ensure an accurate reading.

(e) Read the resistance value displayed on the multimeter.

(f) Disconnect multimeter leads from circuit.

(g) Turn off multimeter.

(2) Voltage Measurements. The forklift is equipped with a 24-volt electrical system. Troubleshooting procedures will reference 24 vdc measurements; however, these values can vary depending on battery conditions and if the engine is running or not. If battery voltages are below 12 vdc, charge batteries.

(a) Connect positive (+) multimeter lead to multimeter VOLT-OHM connector. Connect negative (-) multimeter lead to multimeter COM connector.

(b) Set the function/range switch to the setting closest to, but not below, 24 vdc. If multimeter is equipped with a DC-AC switch, set the switch to the DC position.

www.truck-freeworkshop.com

2-11. GENERAL TROUBLESHOOTING INSTRUCTIONS (CONT).

(c) Always turn the main power switch to the OFF position before connecting multimeter leads to a circuit unless instructed to do otherwise in the troubleshooting procedure 15.

(d) Connect the positive (+) multimeter lead to the circuit being tested. Connect the negative (-) multimeter lead to a known good ground.

(e) Set main power switch to ON position and operate any other controls necessary to energize the circuit being tested.

(f) Read the voltage value displayed on the multimeter.

(g) Set the main power switch to the OFF position. Return other controls to their "at rest" positions.

(h) Disconnect multimeter leads from circuit.

(i) Turn off multimeter.

(3) General Relay Troubleshooting Procedure. The following general relay troubleshooting procedure applies to most relays that are pushed into a receptacle and do not require any attaching hardware.

(a) Pull relay out of receptacle just enough for the relay terminals to make contact with receptacle terminals. Leave about 1/4 to 3/8 in. (6.35 to 9.53 mm) space between the relay and the receptacle to insert a multimeter lead and make contact with the terminal listed in the troubleshooting test.

(b) Perform necessary test.

(4) General Wiring Harness Short Test. The following procedure applies to any wiring harness suspected of being shorted. Refer to electrical schematics during this procedure.

(a) Connect positive (+) multimeter lead to multimeter VOLT-OHM connector. Connect negative (-) multimeter lead to multimeter COM connector. When the multimeter leads are separated or are measuring a circuit with no continuity, the multimeter will indicate "OL" (Over Limit) on its display. When multimeter leads are connected together, multimeter should display "0," indicating a continuous circuit with no (zero) resistance. Wires in a harness that are not purposely joined or connected at a component should not have continuity (multimeter indicates "OL").

(b) Set multimeter function/range switch to the highest OHM range.

(c) Disconnect harness connector.

(d) Connect positive (+) multimeter lead to harness connector terminal of suspected wire.

(e) Connect negative (-) multimeter lead to each of the remaining harness connector terminals. If multimeter does not display "OL," and is displaying a resistance value of zero or higher, this indicates a continuous circuit. Refer to the electrical schematic before repairing wires or replacing wiring harness to determine that the wires making a continuous circuit are not purposely joined or are not connected intentionally at a component.

(f) Disconnect multimeter leads from connector.

(g) Turn off multimeter.

www.truck-freeworkshop.com

2-12. TROUBLESHOOTING PROCEDURES.

The Troubleshooting Fault Index (Table 2-3) lists the systems covered in this section. Refer to the individual System Fault Index tables for the most common failures found during the operation of the forklift. Find the symptom that is closest to the symptom your forklift has and refer to that step for the troubleshooting procedures. Not all possible malfunctions can be covered in troubleshooting. Obvious mechanical failures and damage are not covered.

Table 2-3. Troubleshooting Fault Index

Para	Description	Page
2-13	Engine System Troubleshooting	2-13
2-14	Electrical System Troubleshooting	2-122
2-15	Transmission System Troubleshooting	2-291
2-16	Drive Axle System Troubleshooting	2-331
2-17	Brake System Troubleshooting	2-389
2-18	Hydraulic System Troubleshooting	2-421

2-13. ENGINE SYSTEM TROUBLESHOOTING.

This paragraph covers Engine System Troubleshooting. The Engine System Fault Index, Table 2-4, lists faults for the engine system of the forklift.

Table 2-4. Engine System Fault Index

Fault No.	Troubleshooting Procedure	Page
1.	Engine Fails to Crank	2-14
2.	Engine Cranks But Will Not Run	2-38
3.	Low Engine Oil Pressure (Oil Pressure Gauge Continuously Reads Less Than 30 to 60 psi [207-414 kPa])	2-58
4.	Excessive Engine Oil Consumption	2-66
5.	Excessive Smoke	2-74
6.	Engine Overheats (Engine Temperature Over 250°F [121°C])	2-82
7.	Engine Runs Rough or Misfires	2-92
8.	Engine Does Not Develop Full Power	2-100
9.	Engine Vibrates Excessively	2-110
10.	Heater Does Not Blow Warm or Hot Air	2-116

www.truck-freeworkshop.com

2-13. ENGINE SYSTEM TROUBLESHOOTING (CONT).

1. ENGINE FAILS TO CRANK.

INITIAL SETUP

Tools and Special Tools
Tool Kit, General Mechanic's: Automotive (Item 1, Appendix B)
Multimeter (Item 2, Appendix B)
STE/ICE-R (Optional) (Item 14, Appendix B)
Jumper Wire

Equipment Condition
Engine OFF (TM 10-3930-669-10)
Parking brake applied (TM 10-3930-669-10)
Wheels chocked (TM 10-3930-669-10)
MAIN POWER switch OFF (TM 10-3930-669-10)

References
TM 10-3930-669-10

KNOWN INFO
Nothing.
POSSIBLE PROBLEMS
Shunt to starter cable faulty. Starter ground cable faulty. Starter faulty. Batteries faulty. Battery to shunt cable faulty. Wire 2 faulty. Relay R5 ground wire faulty. Wire 7 faulty. Wire 23 faulty. Relay R5 faulty. Engine switch faulty. Wire 33 faulty. Wire 32 faulty. Relay R3 faulty. Main power switch faulty. Fuse 1 faulty. Wire 4 faulty.

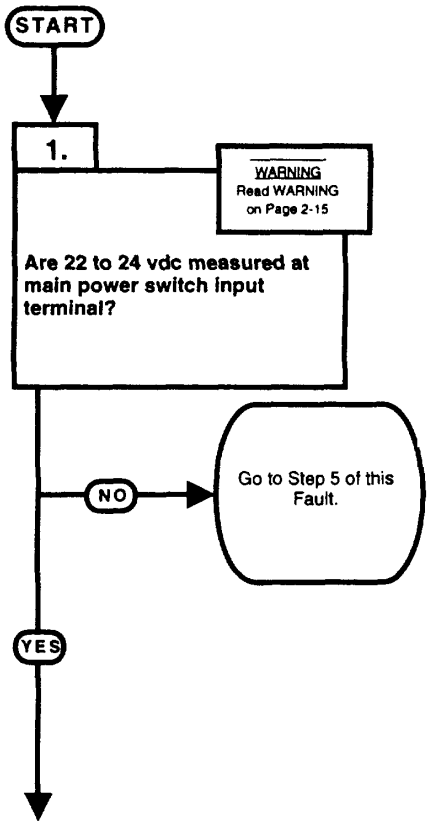

TEST OPTIONS
Voltage test. STE/ICE-R #89.
REASON FOR QUESTION
This question eliminates a possible problem or group of possible problems determining where troubleshooting continues.

www.truck-freeworkshop.com

WARNING

Remove all jewelry such as rings, dog tags, bracelets, etc. If jewelry contacts battery terminal, a direct short may result in instant heating of tools, damage to equipment, and injury or death to personnel.

VOLTAGE TEST

(1) Open engine access panel (TM 10-3930-669-10).
(2) Set multimeter select switch to VOLTS DC.
(3) Connect positive (+) multimeter lead to wire at main power switch, input terminal.
(4) Connect negative (-) multimeter lead to a known good ground.
  (a) If there are not 22 to 24 vdc present, perform Step (5) below and go to Step 5 of this Fault.
  (b) If there are 22 to 24 vdc present, perform Step (5) below and go to Step 2 of this Fault.
(5) Close engine access panel.

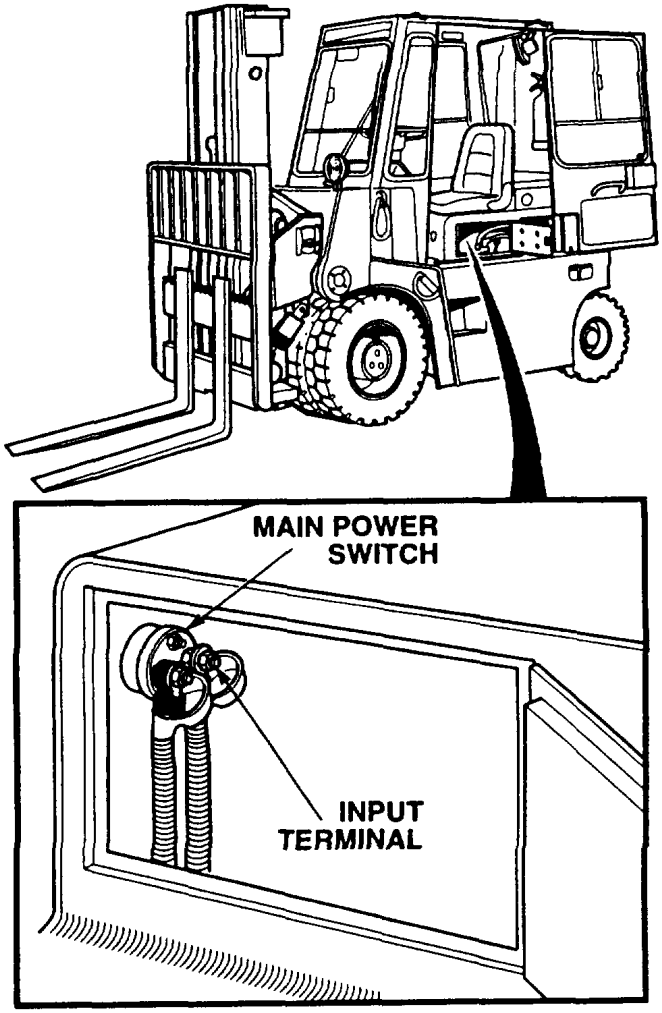

www.truck-freeworkshop.com

1. ENGINE FAILS TO CRANK (CONT).

2.

WARNING
Read WARNING on Page 2-17

Are 22 to 24 vdc measured at starter solenoid wire 23 terminal?

NO → Go to Step 7 of this Fault.

YES ↓

KNOWN INFO
Batteries OK. Battery to shunt cable OK. Wire 2 OK.
POSSIBLE PROBLEMS
Shunt to starter cable faulty. Starter ground cable faulty. Starter faulty. Relay R5 ground wire faulty. Wire 7 faulty. Wire 23 faulty. Relay R5 faulty. Engine switch faulty. Wire 33 faulty. Wire 32 faulty. Relay R3 faulty. Main power switch faulty. Fuse 1 faulty. Wire 4 faulty.

TEST OPTIONS
Voltage test. STE/ICE-R #89.
REASON FOR QUESTION
This question eliminates a possible problem or group of possible problems determining where troubleshooting continues.

3.

WARNING
Read WARNING on Page 2-17

Are 22 to 24 vdc measured at starter solenoid input terminal?

NO → Replace shunt to starter cable (Para 7-53). Go to Step 17 of this Fault.

YES ↓

KNOWN INFO
Batteries OK. Battery to shunt cable OK. Wire 2 OK. Relay R5 ground wire OK. Wire 7 OK. Wire 23 OK. Relay RS OK. Engine switch OK. Wire 33 OK. Wire 32 OK. Relay R3 OK. Main power switch OK. Fuse 1 OK. Wire 4 OK.
POSSIBLE PROBLEMS
Shunt to starter cable faulty. Starter ground cable faulty. Starter faulty.

TEST OPTIONS
Voltage test. STE/ICE-R #89.
REASON FOR QUESTION
If 22 to 24 vdc are not present, power cable is faulty.

www.truck-freeworkshop.com

WARNING

Remove all jewelry such as rings, dog tags, bracelets, etc. If jewelry contacts battery terminal, a direct short may result in instant heating of tools, damage to equipment, and injury or death to personnel.

VOLTAGE TEST

(1) Remove engine ventilation panel (Para 6-2).
(2) Set multimeter select switch to VOLTS DC.
(3) Connect positive (+) multimeter lead on wire 23 at starter solenoid.
(4) Connect negative (-) multimeter lead to a known good ground.
(5) Start engine (TM 10-3930-669-10).
  (a) If there are not 22 to 24 vdc present, perform Step (6) below and go to Step 7 of this Fault.
  (b) If there are 22 to 24 vdc present, perform Step (6) below and go to Step 3 of this Fault.
(6) Shut down engine.

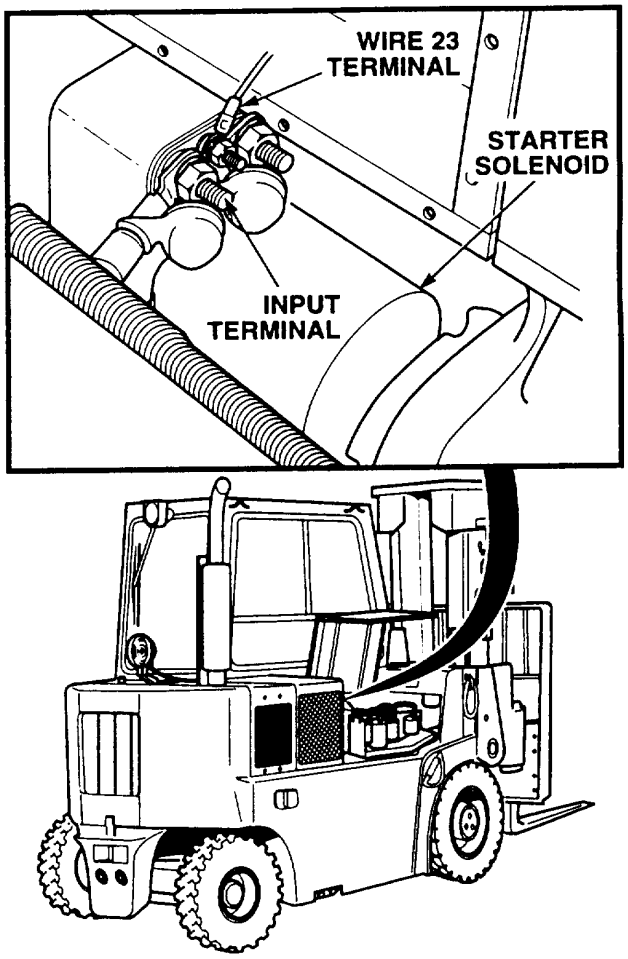

VOLTAGE TEST

(1) Set multimeter select switch to VOLTS DC.
(2) Connect positive (+) multimeter lead to starter solenoid input terminal.
(3) Connect negative (-) multimeter lead to a known good ground.
  (a) If there are not 22 to 24 vdc present, replace shunt to starter cable (Para 7-53).
  (b) If there are 22 to 24 vdc present, shunt to starter is OK.

www.truck-freeworkshop.com

1. ENGINE FAILS TO CRANK (CONT).

KNOWN INFO
Batteries OK. Battery to shunt cable OK. Wire 2 OK. Relay R5 ground wire OK. Wire 7 OK. Wire 23 OK. Relay R5 OK. Engine switch OK. Wire 33 OK. Wire 32 OK. Relay R3 OK. Main power switch OK. Fuse 1 OK. Wire 4 OK. Shunt to starter cable OK.
POSSIBLE PROBLEMS
Starter ground cable faulty. Starter faulty.

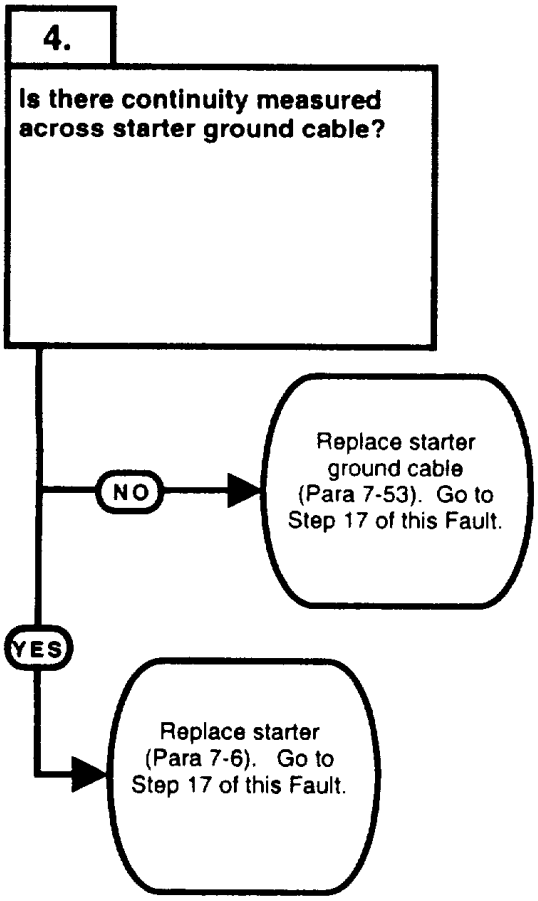

TEST OPTIONS
Continuity test. STE/ICE-R #91.
REASON FOR QUESTION
If continuity is not present, starter ground cable is faulty. If starter ground cable is OK, starter is faulty.

www.truck-freeworkshop.com

CONTINUITY VOLTAGE TEST

(1) Set multimeter select switch to OHMS.
(2) Check continuity across starter ground cable.
  (a) If there is no continuity, replace starter ground cable (Para 7-53).
  (b) If there is continuity, replace starter (Para 7-6).
(3) Install engine ventilation panel (Para 6-2).

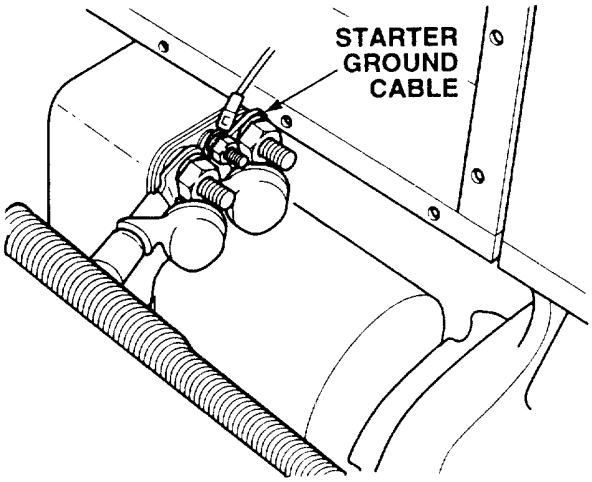

www.truck-freeworkshop.com

1. ENGINE FAILS TO CRANK (CONT).

KNOWN INFO
Shunt to starter cable OK. Starter ground cable OK. Starter OK. Relay R5 ground wire OK. Wire 7 OK. Wire 23 OK. Relay R5 OK. Engine switch OK. Wire 33 OK. Wire 32 OK. Relay R3 OK. Main power switch OK. Fuse 1 OK. Wire 4 OK.

POSSIBLE PROBLEMS
Batteries faulty. Battery to shunt cable faulty. Wire 2 faulty.

5.

WARNING
Read WARNING on Page 2-21

Are 10 to 12 vdc measured across each battery?

NO → Replace battery (Para 7-47). Go to Step 17 of this Fault.

YES ↓

TEST OPTIONS
Voltage test. STE/ICE-R #89.

REASON FOR QUESTION
If 10 to 12 vdc are not present, battery(s) are faulty.

www.truck-freeworkshop.com

WARNING

Remove all jewelry such as rings, dog tags, bracelets, etc. If jewelry contacts battery terminal, a direct short may result in instant heating of tools, damage to equipment, and injury or death to personnel.

VOLTAGE TEST

(1) Open right-hand engine access cover (TM 10-3930-669-10).
(2) Set multimeter select switch to VOLTS DC.
(3) Connect positive (+) multimeter lead to battery positive terminal one at a time.
(4) Connect negative (-) multimeter lead to battery negative terminal one at a time.
(a) If there are not 10 to 12 vdc present, replace battery (Para 7-47).
(b) If there are 10 to 12 vdc present, battery is OK.

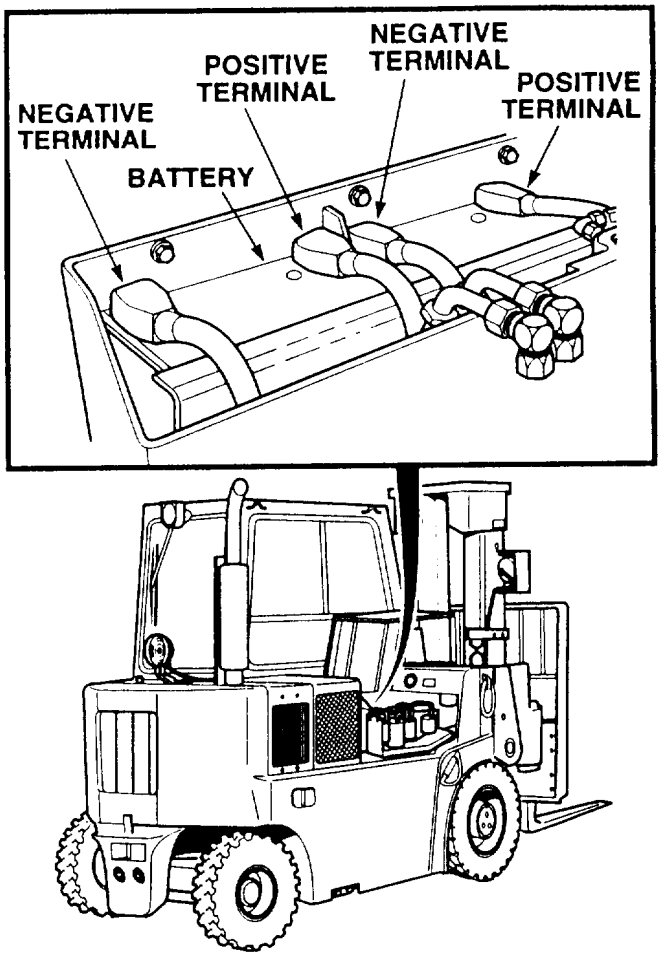

www.truck-freeworkshop.com

1. ENGINE FAILS TO CRANK (CONT).

KNOWN INFO
Shunt to starter cable OK. Starter ground cable OK. Starter OK. Relay R5 ground wire OK. Wire 7 OK. Wire 23 OK. Relay R5 OK. Engine switch OK. Wire 33 OK. Wire 32 OK. Relay R3 OK. Main power switch OK. Fuse 1 OK. Wire 4 OK. Batteries OK.

POSSIBLE PROBLEMS
Battery to shunt cable faulty. Wire 2 faulty.

6.

WARNING
Read WARNING on Page 2-23

Are 22 to 24 vdc measured on battery to shunt cable at shunt?

NO → Replace battery to shunt cable (Para 7-53). Go to Step 17 of this Fault.

YES → Repair wire 2 (see schematic Appendix F). Go to Step 17 of this Fault.

TEST OPTIONS
Voltage test. STE/ICE-R #89.

REASON FOR QUESTION
If 22 to 24 vdc are not present, cable is faulty. If cable is OK, wire 2 is faulty.

www.truck-freeworkshop.com

WARNING

Remove all jewelry such as rings, dog tags, bracelets, etc. If jewelry contacts battery terminal, a direct short may result in instant heating of tools, damage to equipment, and injury or death to personnel.

VOLTAGE TEST

(1) Remove engine ventilation panel (Para 6-2).
(2) Set multimeter select switch to VOLTS DC.
(3) Connect positive (+) multimeter lead to shunt terminal.
(4) Connect negative (-) multimeter lead to a known good ground.
(a) If there are not 22 to 24 vdc present, replace battery to shunt cable (Para 7-53).
(b) If there are 22 to 24 vdc present, repair wire 2 (see schematic Appendix F).
(5) Install engine ventilation panel.

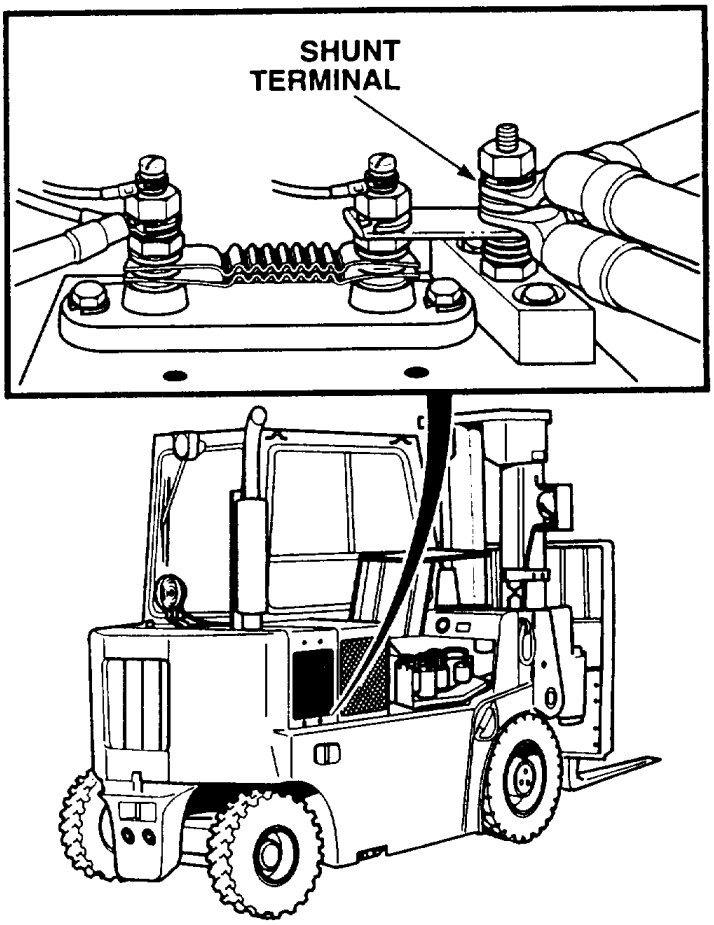

www.truck-freeworkshop.com

1. ENGINE FAILS TO CRANK (CONT).

7.

WARNING
Read WARNING on Page 2-25

Are 22 to 24 vdc measured at relay R5, terminal 86 cavity?

NO → Go to Step 11 of this Fault.

YES ↓

KNOWN INFO
Shunt to starter cable OK. Starter ground cable OK. Starter OK. Batteries OK. Battery to shunt cable OK. Wire 2 OK.

POSSIBLE PROBLEMS
Relay R5 ground wire faulty. Wire 7 faulty. Wire 23 faulty. Relay R5 faulty. Engine switch faulty. Wire 33 faulty. Wire 32 faulty. Relay R3 faulty. Main power switch faulty. Fuse 1 faulty. Wire 4 faulty.

TEST OPTIONS
Voltage test.

REASON FOR QUESTION
This question eliminates a possible problem or group of possible problems determining where troubleshooting continues.

8.

Is continuity measured between relay R5, terminal 85 cavity and a known good ground?

NO → Repair relay R5 ground wire 5 (see schematic Appendix F). Go to Step 17 of this Fault.

YES ↓

KNOWN INFO
Shunt to starter cable OK. Starter ground cable OK. Starter OK. Batteries OK. Battery to shunt cable OK. Wire 2 OK. Engine switch OK. Wire 33 OK. Wire 32 OK. Relay R3 OK. Main power switch OK. Fuse 1 OK. Wire 4 OK.

POSSIBLE PROBLEMS
Relay RS ground wire faulty. Wire 7 faulty. Wire 23 faulty. Relay R5 faulty.

TEST OPTIONS
Continuity test. STE/ICE-R #91.

REASON FOR QUESTION
If continuity is not present, relay R5 ground wire is faulty.

www.truck-freeworkshop.com

WARNING

Remove all jewelry such as rings, dog tags, bracelets, etc. If jewelry contacts battery terminal, a direct short may result in instant heating of tools, damage to equipment, and injury or death to personnel.

VOLTAGE TEST

(1) Remove relay R5 (Para 7-33).
(2) Set multimeter select switch to VOLTS DC.
(3) Connect positive (+) multimeter lead to relay R5, terminal 86 cavity.
(4) Connect negative (-) multimeter lead to a known good ground.
(5) Start engine (TM 10-3930-669-10).
  (a) If there are not 22 to 24 vdc present, perform Steps (6) and (7) below and go to Step 11 of this Fault.
  (b) If there are 22 to 24 vdc present, perform Step (6) below and go to Step 8 of this Fault.
(6) Shut down engine.
(7) Install relay R5.

CONTINUITY TEST

(1) Set multimeter select switch to OHMS.
(2) Check continuity between relay R5, terminal 85 cavity and a known good ground.
  (a) If there is no continuity, repair relay R5 ground wire 5 (see schematic Appendix F).
  (b) If there is continuity, relay R5 ground wire is OK.

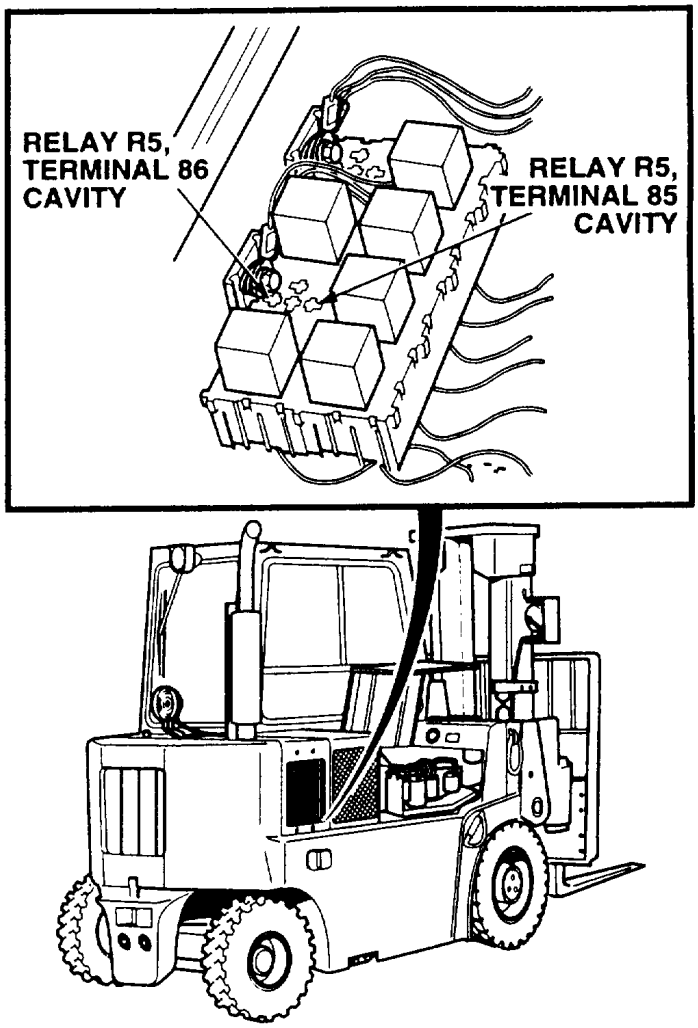

www.truck-freeworkshop.com

1. ENGINE FAILS TO CRANK (CONT).

KNOWN INFO
Shunt to starter cable OK. Starter ground cable OK. Starter OK. Batteries OK. Battery to shunt cable OK. Wire 2 OK. Engine switch OK. Wire 33 OK. Wire 32 OK. Relay R3 OK. Main power switch OK. Fuse 1 OK. Wire 4 OK. Relay R5 ground wire OK.
POSSIBLE PROBLEMS
Wire 7 faulty. Wire 23 faulty. Relay R5 faulty.

9.

WARNING
Read WARNING on Page 2-27

Are 22 to 24 vdc measured at relay R5, terminal 30 cavity?

NO → Repair wire 7 (see schematic Appendix F). Go to Step 17 of this Fault.

YES ↓

TEST OPTIONS
Voltage test. STE/ICE-R #89.
REASON FOR QUESTION
If 22 to 24 vdc are not present, wire 7 is faulty.

KNOWN INFO
Shunt to starter cable OK. Starter ground cable OK. Starter OK. Batteries OK. Battery to shunt cable OK. Wire 2 OK. Engine switch OK. Wire 33 OK. Wire 32 OK. Relay R3 OK. Main power switch OK. Fuse 1 OK. Wire 4 OK. Relay R5 ground wire OK. Wire 7 OK.
POSSIBLE PROBLEMS
Wire 23 faulty. Relay R5 faulty.

10.

Is continuity measured between relay R5, terminal 87 cavity and starter solenoid wire 23 terminal?

NO → Repair wire 23 (see schematic Appendix F). Go to Step 17 of this Fault.

YES → Replace relay R5 (Para 7-33). Go to Step 17 of this Fault.

TEST OPTIONS
Continuity test. STE/ICE-R #91.
REASON FOR QUESTION
If continuity is not present, wire 23 is faulty. If wire 23 is OK, relay R5 is faulty.

www.truck-freeworkshop.com

WARNING

Remove all jewelry such as rings, dog tags, bracelets, etc. If jewelry contacts battery terminal, a direct short may result in instant heating of tools, damage to equipment, and injury or death to personnel.

VOLTAGE TEST

(1) Set multimeter select switch to VOLTS DC.
(2) Connect positive (+) multimeter lead to relay R5, terminal 30 cavity.
(3) Set MAIN POWER switch to ON position (TM 10-3930-669-10).
(4) Connect negative (-) multimeter lead to a known good ground.
  (a) If there are not 22 to 24 vdc present, perform Step (5) below and repair wire 7 (see schematic Appendix F).
  (b) If there are 22 to 24 vdc present, wire 7 is OK.
(5) Set MAIN POWER switch to OFF position.

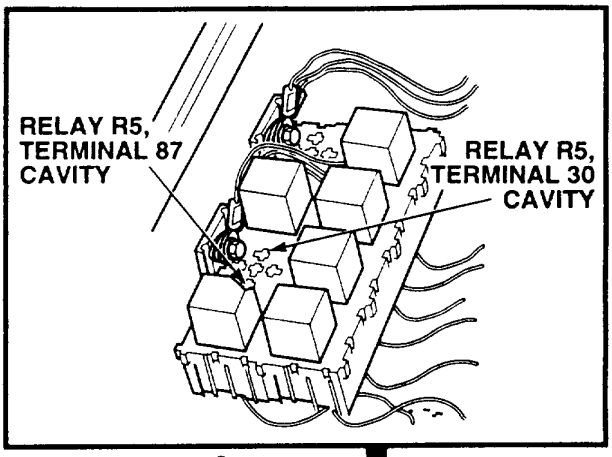

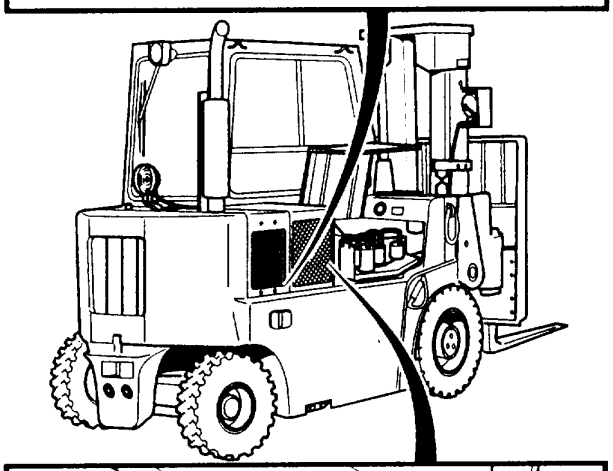

CONTINUITY TEST

(1) Set multimeter select switch to OHMS.
(2) Check continuity between relay R5, terminal 87 cavity and starter solenoid wire 23 terminal.
  (a) If there is no continuity, repair wire 23 (see schematic Appendix F).
  (b) If there is continuity, replace relay R5 (Para 7-33).
(3) Install relay R5 (Para 7-33).

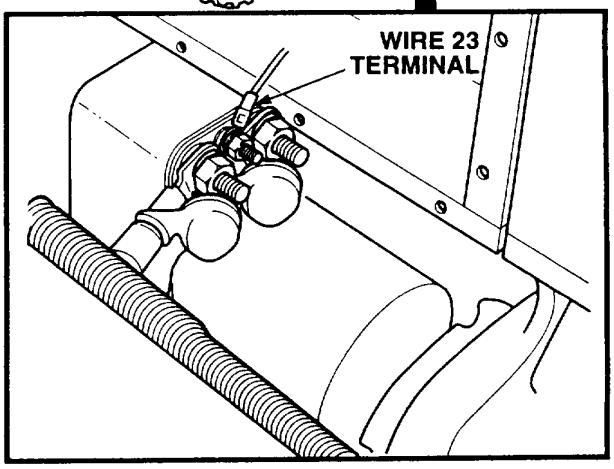

www.truck-freeworkshop.com

1. ENGINE FAILS TO CRANK (CONT).

KNOWN INFO

Shunt to starter cable OK.
Starter ground cable OK.
Starter OK.
Batteries OK.
Battery to shunt cable OK.
Wire 2 OK.
Relay R5 ground wire OK.
Wire 7 OK.
Wire 23 OK.
Relay R5 OK.

POSSIBLE PROBLEMS

Engine switch faulty.
Wire 33 faulty.
Wire 32 faulty.
Relay R3 faulty.
Main power switch faulty.
Fuse 1 faulty.
Wire 4 faulty.

11.

WARNING
Read WARNING on Page 2-29

Are 22 to 24 vdc measured at engine switch wire 4 terminal?

NO → Go to Step 15 of this Fault.

YES ↓

TEST OPTIONS

Voltage test.
STE/ICE-R #89.

REASON FOR QUESTION

This question eliminates a possible problem or group of possible problems determining where troubleshooting continues.

KNOWN INFO

Shunt to starter cable OK.
Starter ground cable OK.
Starter OK.
Batteries OK.
Battery to shunt cable OK.
Wire 2 OK.
Relay R5 ground wire OK.
Wire 7 OK.
Wire 23 OK.
Relay R5 OK.
Main power switch OK.
Fuse 1 OK.
Wire 4 OK.

POSSIBLE PROBLEMS

Engine switch faulty.
Wire 33 faulty.
Wire 32 faulty.
Relay R3 faulty.

12.

Is continuity measured between engine switch wire 33 and wire 4 terminals with engine switch in start position?

NO → Replace engine switch (Para 7-14). Go to Step 17 of this Fault.

YES ↓

TEST OPTIONS

Continuity test.
STE/ICE-R #91.

REASON FOR QUESTION

If continuity is not present, engine switch is faulty.

www.truck-freeworkshop.com

WARNING

Remove all jewelry such as rings, dog tags, bracelets, etc. If jewelry contacts battery terminal, a direct short may result in instant heating of tools, damage to equipment, and injury or death to personnel.

VOLTAGE TEST

(1) Remove lower and upper column covers (Para 7-21).
(2) Set multimeter select switch to VOLTS DC.
(3) Connect positive (+) multimeter lead to engine switch wire 4 terminal.
(4) Connect negative (-) multimeter lead to a known good ground.
(5) Set MAIN POWER switch to ON position (TM 10-3930-669-10).
(a) If there are not 22 to 24 vdc present, perform Step (6) below and go to Step 15 of this Fault.
(b) If there are 22 to 24 vdc present, perform Step (6) below and go to Step 12 of this Fault.
(6) Set MAIN POWER switch to OFF position.

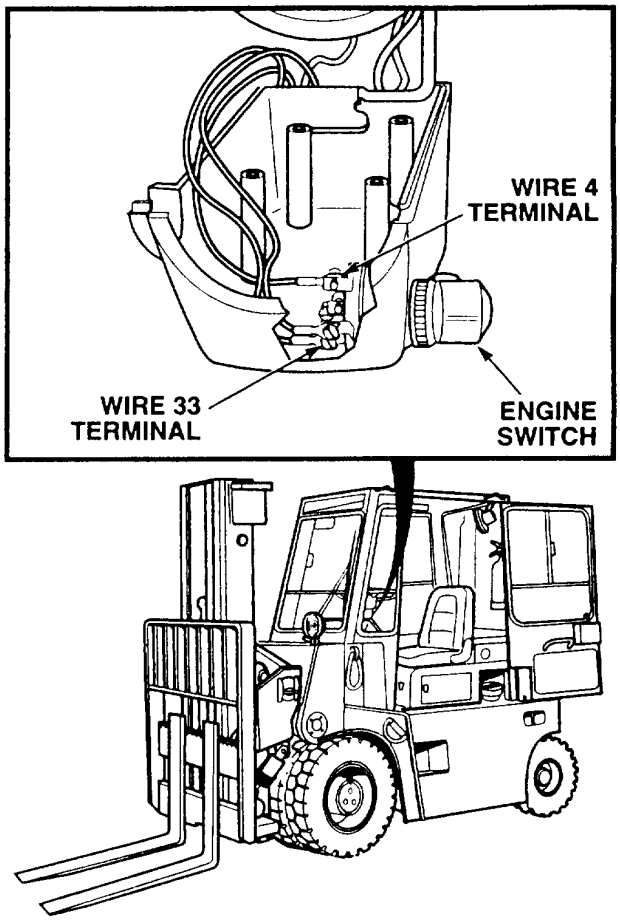

CONTINUITY TEST

(1) Set multimeter select switch to OHMS.
(2) Check continuity between engine switch wire 33 and wire 4 terminals.
(3) Set engine switch in start position (TM 10-3930-669-10).
(a) If there is no continuity, replace engine switch (Para 7-14).
(b) If there is continuity, engine switch is OK.

www.truck-freeworkshop.com

1. ENGINE FAILS TO CRANK (CONT).

KNOWN INFO

Shunt to starter cable OK.
Starter ground cable OK.
Starter OK.
Batteries OK.
Battery to shunt cable OK.
Wire 2 OK.
Relay R5 ground wire OK.
Wire 7 OK.
Wire 23 OK.
Relay R5 OK.
Main power switch OK.
Fuse 1 OK.
Wire 4 OK.
Engine switch OK.

POSSIBLE PROBLEMS

Wire 33 faulty.
Wire 32 faulty.
Relay R3 faulty.

13.

WARNING
Read WARNING on Page 2-31

Are 22 to 24 vdc measured at relay R3, terminal 30 cavity?

NO → Repair wire 33 (see schematic Appendix F). Go to Step 17 of this Fault.

YES ↓

TEST OPTIONS

Voltage test.
STE/ICE-R #89.

REASON FOR QUESTION

If 22 to 24 vdc are not present,
wire 33 is faulty.

KNOWN INFO

Shunt to starter cable OK.
Starter ground cable OK.
Starter OK.
Batteries OK.
Battery to shunt cable OK.
Wire 2 OK.
Relay R5 ground wire OK.
Wire 7 OK.
Wire 23 OK.
Relay R5 OK.
Main power switch OK.
Fuse 1 OK.
Wire 4 OK.
Engine switch OK.
Wire 33 OK.

POSSIBLE PROBLEMS

Wire 32 faulty.
Relay R3 faulty.

14.

Is continuity measured between relay R3, terminal 87 and relay R5, terminal 86 cavities?

NO → Repair wire 32 (see schematic Appendix F). Go to Step 17 of this Fault.

YES → Replace relay R3 (Para 7-33). Go to Step 17 of this Fault.

TEST OPTIONS

Continuity test.
STE/ICE-R #91.

REASON FOR QUESTION

If continuity is not present, wire 32 is faulty. If wire 32 is OK, relay R3 is faulty.

www.truck-freeworkshop.com

WARNING

Remove all jewelry such as rings, dog tags, bracelets, etc. If jewelry contacts battery terminal, a direct short may result in instant heating of tools, damage to equipment, and injury or death to personnel.

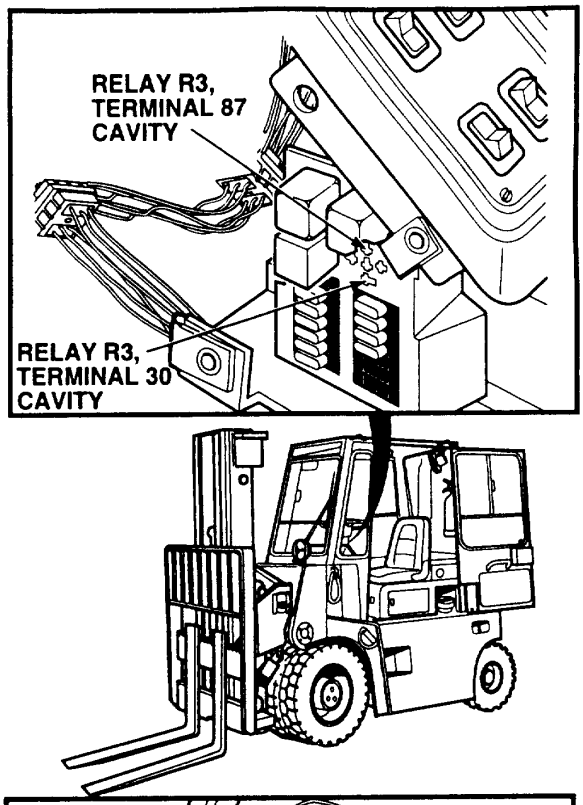

VOLTAGE TEST

(1) Remove relay R3 (Para 7-33).
(2) Set multimeter select switch to VOLTS DC.
(3) Connect positive (+) multimeter lead to relay R3, terminal 30 cavity.
(4) Connect negative (-) multimeter lead to a known good ground.
(5) Start engine (TM 10-3930-669-10).
  (a) If there are not 22 to 24 vdc present, perform Step (6) below and repair wire 33 (see schematic Appendix F).
  (b) If there are 22 to 24 vdc present, wire 33 is OK.
(6) Shut down engine.
(7) Install relay R3 (Para 7-33)
(8) Install upper and lower column covers (Para 7-21).

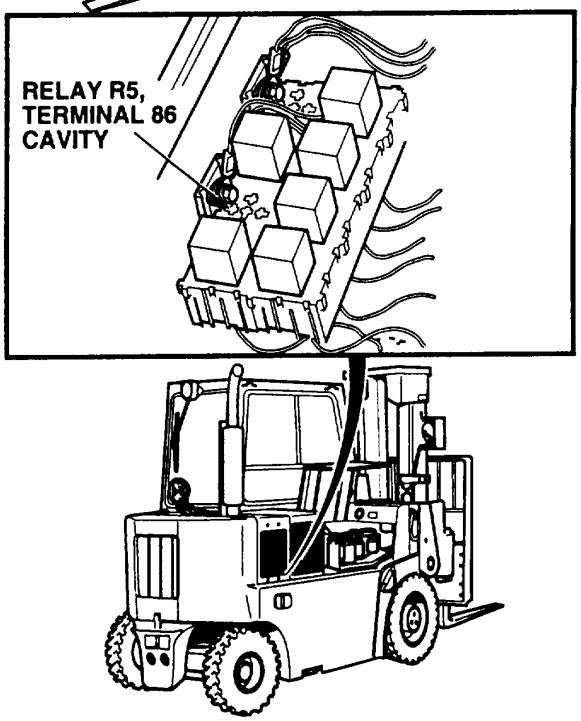

VOLTAGE TEST

(1) Remove relay R5 (Para 7-33).
(2) Set multimeter select switch to OHMS.
(3) Check continuity between relay R3, terminal 87 and relay R5, terminal 86 cavities.
  (a) If there is no continuity, repair wire 32 (see schematic Appendix F).
  (b) If there is continuity, replace relay R3.
(4) Install relays R5 and R3.

www.truck-freeworkshop.com

1. ENGINE FAILS TO CRANK (CONT).

KNOWN INFO
Shunt to starter cable OK. Starter ground cable OK. Starter OK. Batteries OK. Battery to shunt cable OK. Wire 2 OK. Relay R5 ground wire OK. Wire 7 OK. Wire 23 OK. Relay R5 OK. Engine switch OK. Wire 33 OK. Wire 32 OK. Relay R3 OK.
POSSIBLE PROBLEMS
Main power switch faulty. Fuse 1 faulty. Wire 4 faulty.

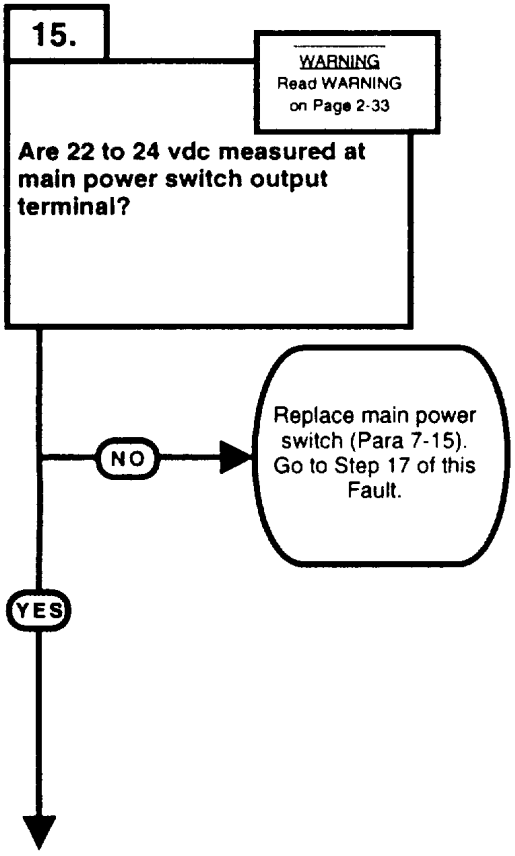

TEST OPTIONS
Voltage test. STE/ICE-R #89.
REASON FOR QUESTION
If 22 to 24 vdc are not present. main power switch is faulty.

www.truck-freeworkshop.com

WARNING

Remove all jewelry such as rings, dog tags, bracelets, etc. If jewelry contacts battery terminal, a direct short may result in instant heating of tools, damage to equipment, and injury or death to personnel.

VOLTAGE TEST

(1) Set multimeter select switch to VOLTS DC.
(2) Connect positive (+) multimeter lead to main power switch, output terminal.
(3) Connect negative (-) multimeter lead to a known good ground.
(4) Set MAIN POWER switch to ON position (TM 10-3930-669-10).
  (a) If there are not 22 to 24 vdc present, perform Step (5) below and replace main power switch (Para 7-15).
  (b) If there are 22 to 24 vdc present, main power switch is OK.
(5) Set MAIN POWER switch to OFF position.
(6) Close engine access panel (TM 10-3930-669-10).

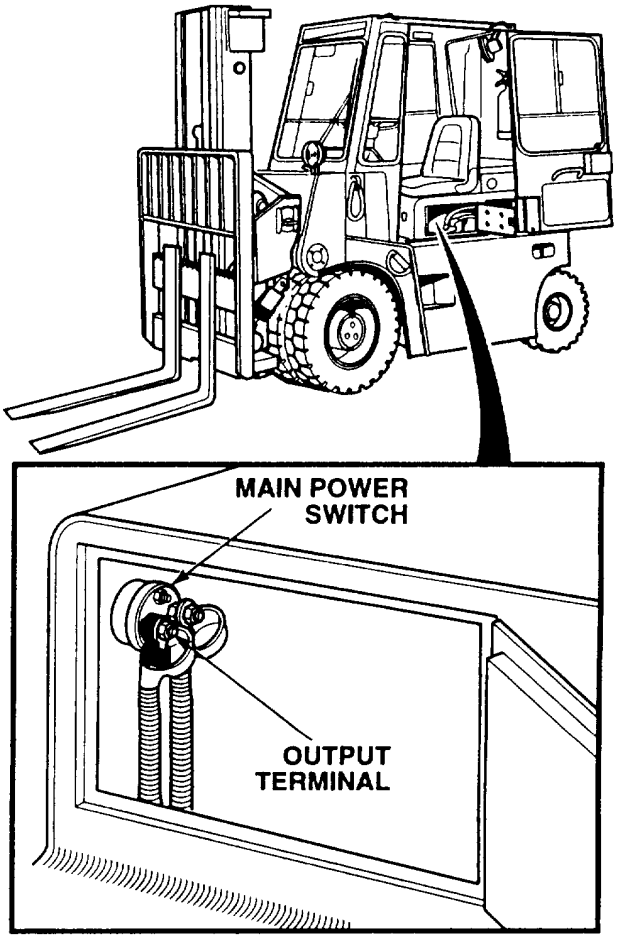

www.truck-freeworkshop.com

1. ENGINE FAILS TO CRANK (CONT).

KNOWN INFO
Shunt to starter cable OK. Starter ground cable OK. Starter OK. Batteries OK. Battery to shunt cable OK. Wire 2 OK. Relay R5 ground wire OK. Wire 7 OK. Wire 23 OK. Relay R5 OK. Engine switch OK. Wire 33 OK. Wire 32 OK. Relay R3 OK. Main power switch OK.
POSSIBLE PROBLEMS
Fuse 1 faulty. Wire 4 faulty.

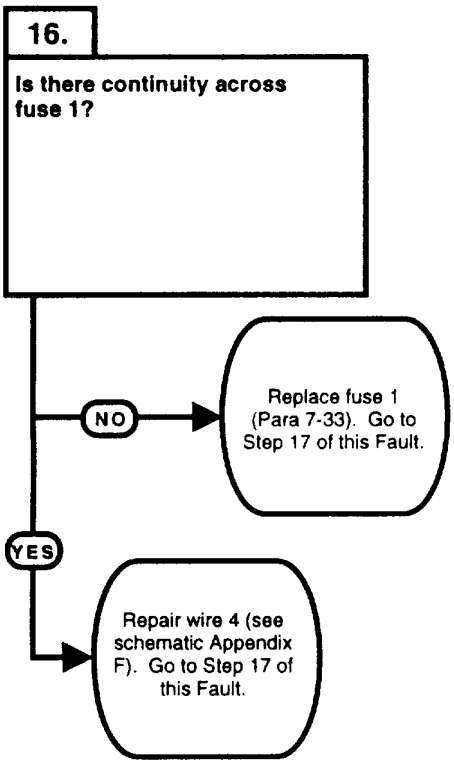

TEST OPTIONS
Continuity test. STE/ICE-R #91.
REASON FOR QUESTION
If continuity is not present, fuse 1 is faulty. If fuse 1 is OK, wire 4 is faulty.

www.truck-freeworkshop.com

CONTINUITY TEST
(1) Remove fuse 1 (Para 7-33). (2) Set multimeter select switch to OHMS. (3) Check continuity across fuse 1. (a) If there is no continuity, replace fuse 1. (b) If there is continuity, fuse 1 is OK. Repair wire 4 (see schematic Appendix F). (4) Install fuse 1.

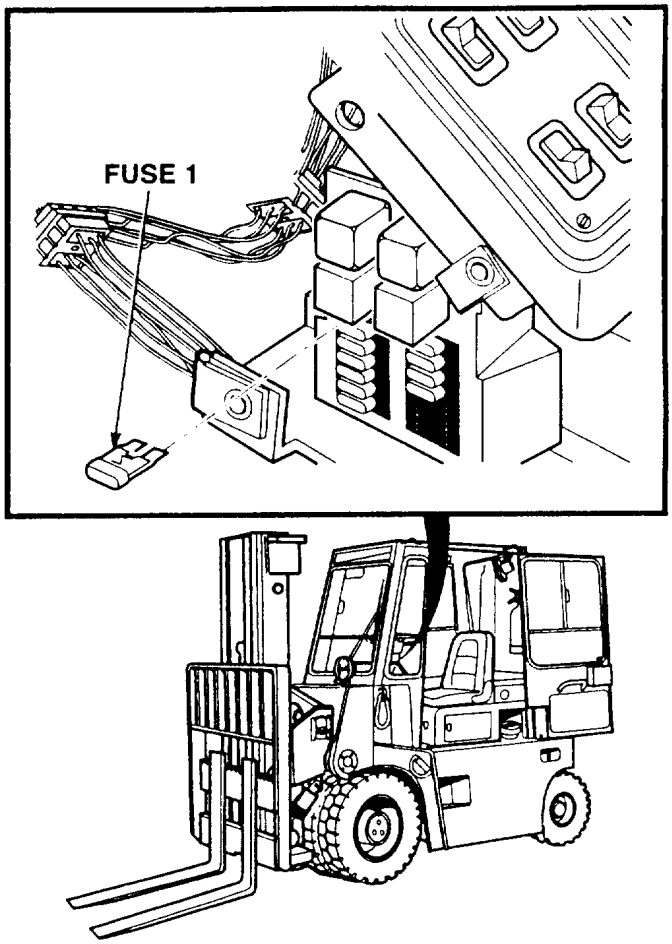

www.truck-freeworkshop.com

1. ENGINE FAILS TO CRANK (CONT).

KNOWN INFO
Shunt to starter cable OK. Starter ground cable OK. Starter OK. Batteries OK. Battery to shunt cable OK. Wire 2 OK. Relay R5 ground wire OK. Wire 7 OK. Wire 23 OK. Relay R5 OK. Engine switch OK. Wire 33 OK. Wire 32 OK. Relay R3 OK. Main power switch OK. Fuse 1 OK. Wire 4 OK. **POSSIBLE PROBLEMS**

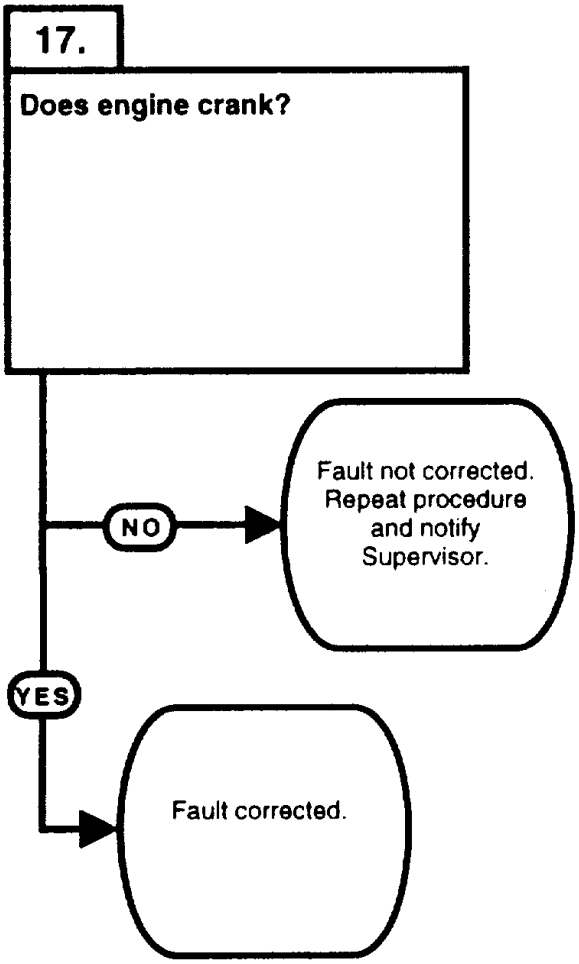

TEST OPTIONS
Verify repair.
REASON FOR QUESTION
If engine cranks, fault has been corrected.

www.truck-freeworkshop.com

VOLTAGE TEST
(1) Start engine (TM 10-3930-669-10). (a) If engine will not crank, fault not corrected. Perform Step (2) below. Repeat procedure and notify Supervisor. (b) If engine cranks, fault corrected. (2) Shut down engine.

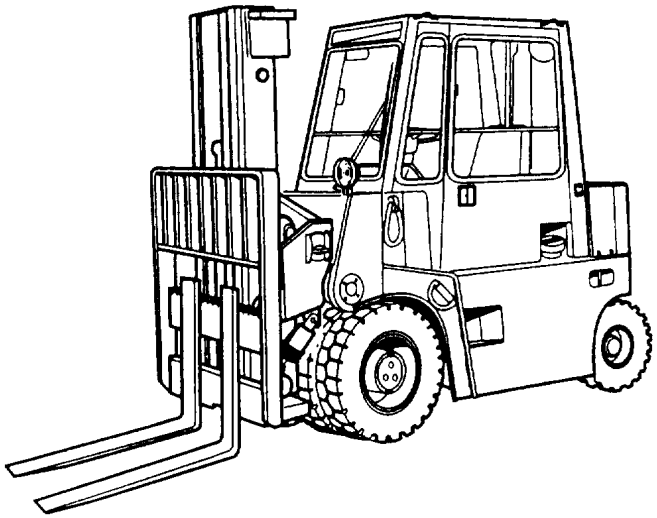

www.truck-freeworkshop.com

2-13. ENGINE SYSTEM TROUBLESHOOTING (CONT).

2. ENGINE CRANKS BUT WILL NOT RUN.

INITIAL SETUP

Tools and Special Tools
- Tool Kit, General Mechanic's: Automotive (Item 1, Appendix B)
- Multimeter (Item 2, Appendix B)
- STE/ICE-R (Optional) (Item 14, Appendix B)
- Jumper Wire

Equipment Condition
- Engine OFF (TM 10-3930-669-10)
- MAIN POWER switch OFF (TM 10-3930-669-10)
- Parking brake applied (TM 10-3930-669-10)
- Wheels chocked (TM 10-3930-669-10)

References
- TM 10-3930-669-10

KNOWN INFO

Engine cranks.
Glow plug indicator operates.

POSSIBLE PROBLEMS

Fuel shutoff solenoid faulty.
Glow plugs faulty.
Throttle adjustment incorrect.
Water in fuel.
Fuel injector(s) faulty.
Fuse 2 faulty.
Wire 6 faulty.
Wire 34 faulty.
Relay R4 ground wire faulty.
Wire 7 faulty.
Wire 9A faulty.
Relay R4 faulty.

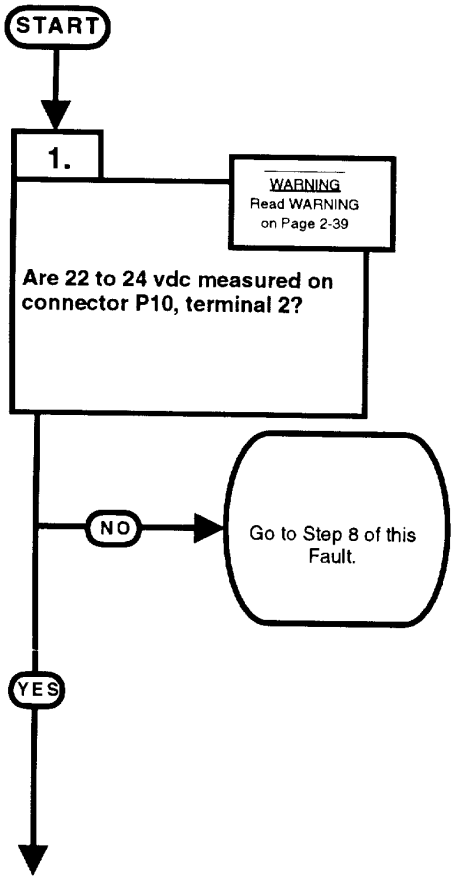

TEST OPTIONS

Voltage Test
STE/ICE-R #89.

REASON FOR QUESTION

This question eliminates a possible problem or group of possible problems determining where troubleshooting continues.

www.truck-freeworkshop.com

WARNING

Remove all jewelry such as rings, dog tags, bracelets, etc. If jewelry contacts battery terminal, a direct short may result in instant heating of tools, damage to equipment, and injury or death to personnel.

VOLTAGE TEST

(1) Open engine access panel (TM 10-3930-669-10).
(2) Disconnect connector P10.
(3) Set multimeter select switch to VOLTS DC.
(4) Connect positive (+) multimeter lead to connector P10, terminal 2.
(5) Connect negative (-) multimeter lead to a known good ground.
(6) Set MAIN POWER switch to ON position (TM 10-3930-669-10).
(7) Set engine switch to ignition position (TM 10-3930-669-10).
  (a) If there are not 22 to 24 vdc present, perform Steps (8) and (9) below and go to Step 8 of this Fault.
  (b) If there are 22 to 24 vdc present, perform Steps (8) through (10) below and go to Step 2 of this Fault.
(8) Set MAIN POWER switch to OFF position.
(9) Set engine switch to off position.
(10) Close engine access panel.

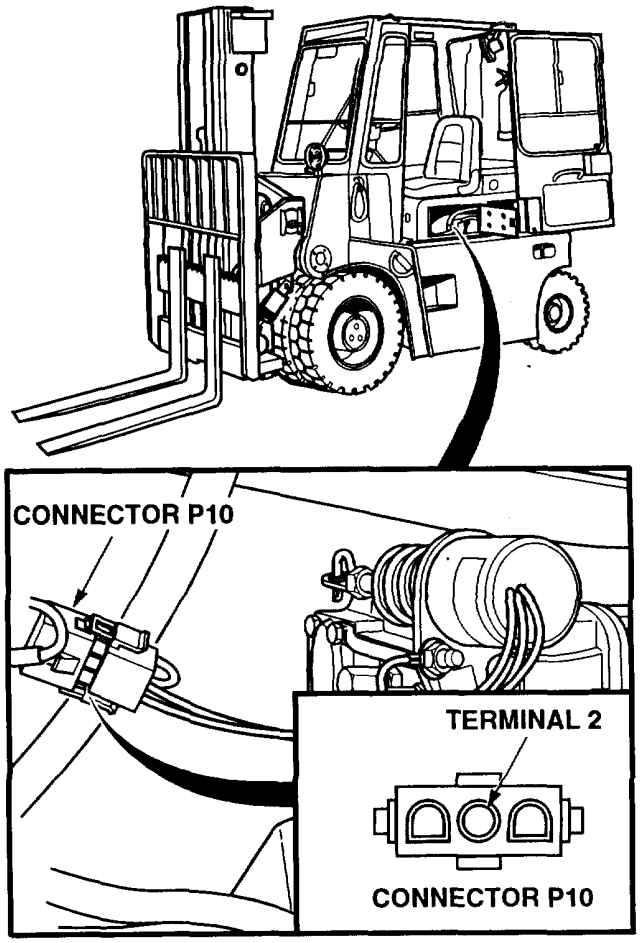

www.truck-freeworkshop.com

2. ENGINE CRANKS BUT WILL NOT RUN (CONT).

KNOWN INFO

Engine cranks.
Glow plug indicator operates.
Fuse 2 OK.
Wire 6 OK.
Wire 34 OK.

POSSIBLE PROBLEMS

Fuel shutoff solenoid faulty.
Glow plugs faulty.
Throttle adjustment incorrect.
Water in fuel.
Fuel injector(s) faulty.
Relay R4 ground wire faulty.
Wire 7 faulty.
Wire 9A faulty.
Relay R4 faulty.

2.

WARNING
Read WARNING on Page 2-41

Are 22 to 24 vdc measured on connector P10, terminal 3?

NO → Go to Step 9 of this Fault.

YES ↓

TEST OPTIONS

Voltage test.
STE/ICE-R #89.

REASON FOR QUESTION

This question eliminates a possible problem or group of possible problems determining where troubleshooting continues.

KNOWN INFO

Engine cranks.
Glow plug indicator operates.
Fuse 2 OK.
Wire 6 OK.
Wire 34 OK.
Relay R4 ground wire OK.
Wire 7 OK.
Wire 9A OK.
Relay R4 OK.

POSSIBLE PROBLEMS

Fuel shutoff solenoid faulty.
Glow plugs faulty.
Throttle adjustment incorrect.
Water in fuel.
Fuel injector(s) faulty.

3.

Does fuel shutoff solenoid actuate?

NO → Replace fuel shutoff solenoid (Para 7-36). Go to Step 13 of this Fault.

YES ↓

TEST OPTIONS

Visual inspection.

REASON FOR QUESTION

If shutoff solenoid does not actuate while starting engine and with engine system in ignition, shutoff solenoid is faulty.

www.truck-freeworkshop.com

WARNING

Remove all jewelry such as rings, dog tags, bracelets, etc. If jewelry contacts battery terminal, a direct short may result in instant heating of tools, damage to equipment, and injury or death to personnel.

VOLTAGE TEST

(1) Set multimeter select switch to VOLTS DC.
(2) Connect positive (+) multimeter lead to connector P10, terminal 3.
(3) Connect negative (-) multimeter lead to a known good ground.
(4) Start engine (TM 10-3930-669-10).
  (a) If there are not 22 to 24 vdc present during cranking, perform Steps (5) through (7) below and go to Step 9 of this Fault.
  (b) If there are 22 to 24 vdc present during cranking, perform Steps (5) and (6) below and go to Step 3 of this Fault.
(5) Shut down engine.
(6) Connect connector P10.
(7) Close engine access panel (TM 10-3930-669-10).

VOLTAGE TEST

(1) Set MAIN POWER switch to ON position (TM 10-3930-669-10).
(2) Set engine switch to ignition position (TM 10-3930-669-10).
(3) Observe fuel shutoff solenoid armature.
  (a) If solenoid armature does not actuate, go to Step (4) below.
  (b) If solenoid armature does actuate, perform Steps (6) and (7) below and replace fuel shutoff solenoid (Para 7-36).
(4) Set engine switch to start position.
(5) Observe fuel shutoff solenoid armature.
  (a) If solenoid armature does not actuate, perform Steps (6) and (7) below and replace fuel shutoff solenoid (Para 7-36).
  (b) If solenoid armature does actuate, fuel shutoff solenoid is OK.
(6) Set MAIN POWER switch to OFF position.
(7) Set engine switch to off position.
(8) Close engine access panel (TM 10-3930-669-10).

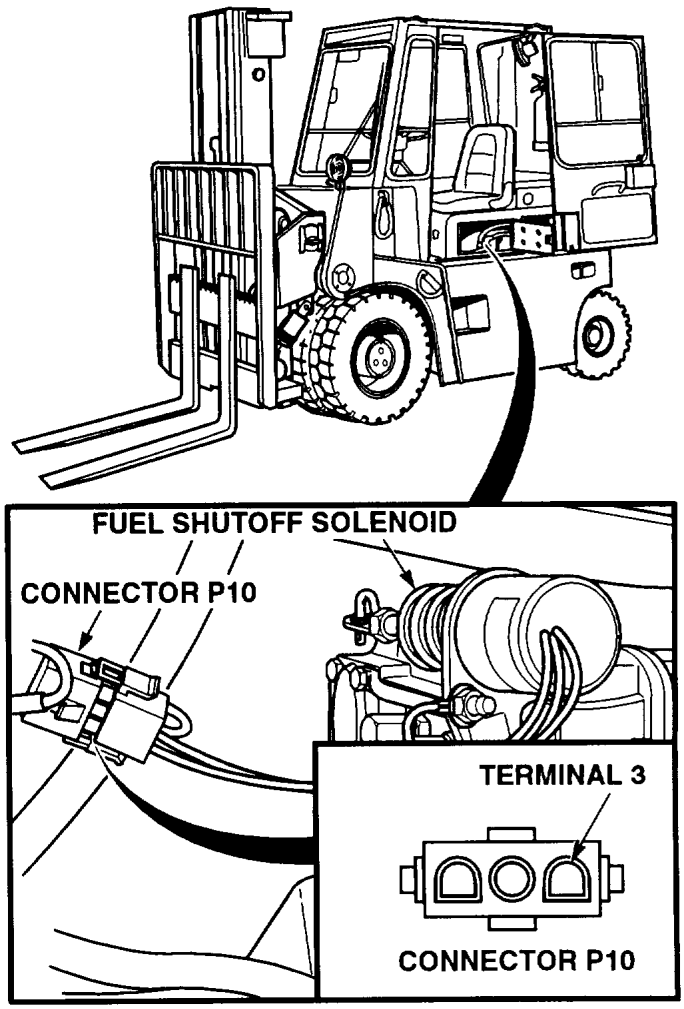

www.truck-freeworkshop.com

2. ENGINE CRANKS BUT WILL NOT RUN (CONT).

KNOWN INFO
Engine cranks. Glow plug indicator operates. Fuse 2 OK. Wire 6 OK. Wire 34 OK. Relay R4 ground wire OK. Wire 7 OK. Wire 9A OK. Relay R4 OK. Fuel shutoff solenoid OK.
POSSIBLE PROBLEMS
Glow plugs faulty. Throttle adjustment incorrect. Water in fuel. Fuel injector(s) faulty.

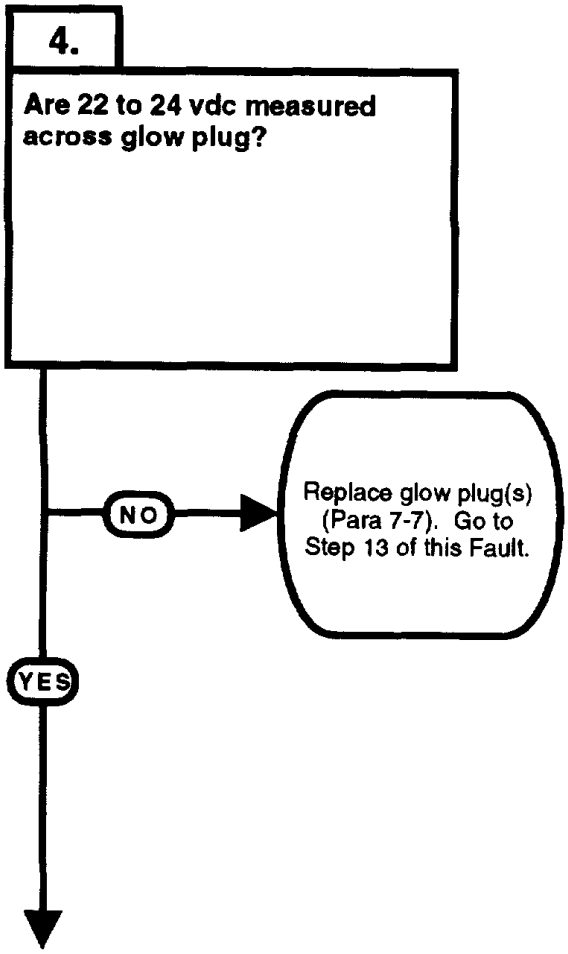

TEST OPTIONS
Voltage test. STEA/CE-R #89.
REASON FOR QUESTION
If 22 to 24 vdc are not measured, glow plug(s) is faulty.

www.truck-freeworkshop.com

WARNING

Remove all jewelry such as rings, dog tags, bracelets, etc. If jewelry contacts battery terminal, a direct short may result in instant heating of tools, damage to equipment, and injury or death to personnel.

VOLTAGE TEST

(1) Open engine access panel (TM 10-3930-669-10).
(2) Set multimeter select switch to VOLTS DC.
(3) Connect positive (+) multimeter lead to glow plug one at a time.
(4) Connect negative (-) multimeter lead to a known good ground.
(5) Set MAIN POWER switch to ON position (TM 10-3930-669-10).
(6) Set engine switch to ignition position (TM 10-3930-669-10).
(7) Check VOLTS DC between glow plug and a known good ground one at a time, while holding glow plug button depressed.
  (a) If 22 to 24 vdc are not measured, replace glow plug (Para 7-7).
  (b) If 22 to 24 vdc are measured, glow plug(s) are OK.
(8) Set MAIN POWER switch to OFF position.
(9) Set engine switch to off position.
(10) Close engine access panel (TM 10-3930-669-10).

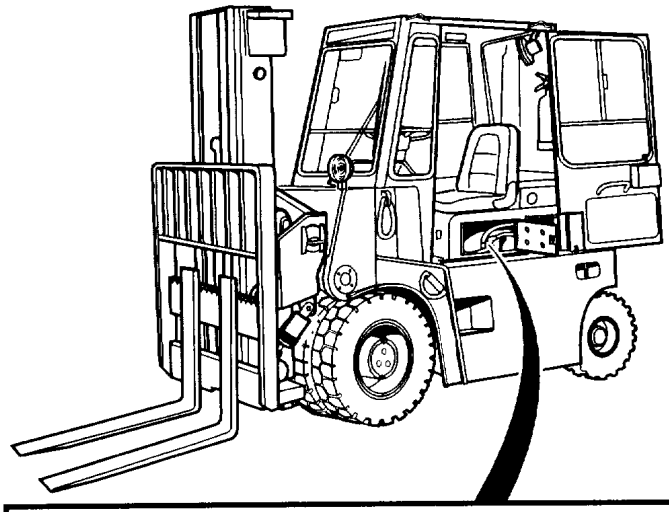

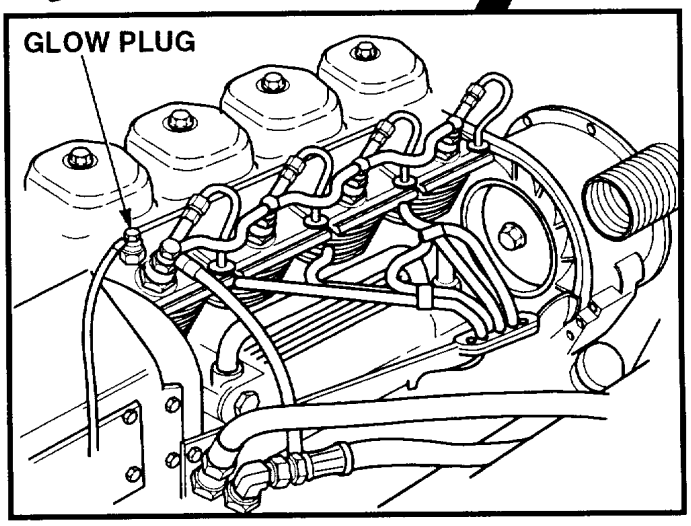

www.truck-freeworkshop.com

2. ENGINE CRANKS BUT WILL NOT RUN (CONT).

KNOWN INFO
Engine cranks. Glow plug indicator operates. Fuse 2 OK. Wire 6 OK. Wire 34 OK. Relay R4 ground wire OK. Wire 7 OK. Wire 9A OK. Relay R4 OK. Fuel shutoff solenoid OK. Glow plugs OK.
POSSIBLE PROBLEMS
Throttle adjustment incorrect. Water in fuel. Fuel injector(s) faulty.

5.

Is throttle pedal operating throttle linkage correctly?

NO → Adjust throttle (Para 4-12). Go to Step 13 of this Fault.

YES ↓

TEST OPTIONS
Visual inspection.
REASON FOR QUESTION
If throttle is not adjusted correctly, throttle speed will be too low to start engine.

www.truck-freeworkshop.com

VISUAL INSPECTION
(1) Remove floor plate (Para 15-12). (2) Open engine access panel (TM 10-3930-669-10). (3) Inspect throttle cable adjustment (Para 4-12). (a) If throttle cable adjustment is incorrect, adjust throttle linkage. (b) If throttle cable adjustment is correct, throttle cable is OK. (4) Install floor plate. (5) Close engine access panel.

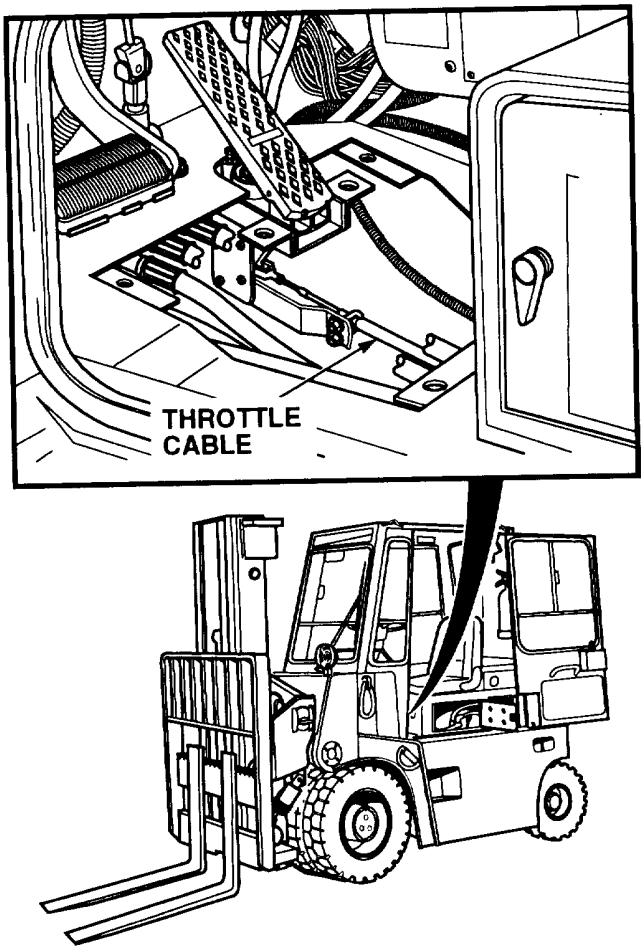

www.truck-freeworkshop.com

2. ENGINE CRANKS BUT WILL NOT RUN (CONT).

KNOWN INFO
Engine cranks. Glow plug indicator operates. Fuse 2 OK. Wire 6 OK. Wire 34 OK. Relay R4 ground wire OK. Wire 7 OK. Wire 9A OK. Relay R4 OK. Fuse shutoff solenoid OK. Glow plugs OK. Throttle adjustment correct.
POSSIBLE PROBLEMS
Water in fuel. Fuel injector(s) faulty.

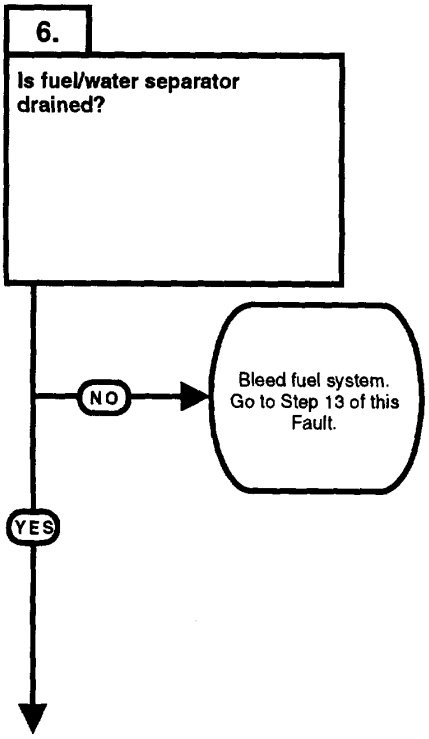

TEST OPTIONS
Visual inspection.
REASON FOR QUESTION
If condensation is in fuel, water in fuel is faulty.

www.truck-freeworkshop.com

VISUAL INSPECTION
(1) Open right-hand engine access cover (TM 10-3930-669-10). (2) Check fuel/water separator (TM 10-3930-669-10). (a) If fuel/water separator drains water, bleed fuel system. (b) If fuel/water separator does not drain water, fuel is OK. (3) Close right-hand engine access cover.

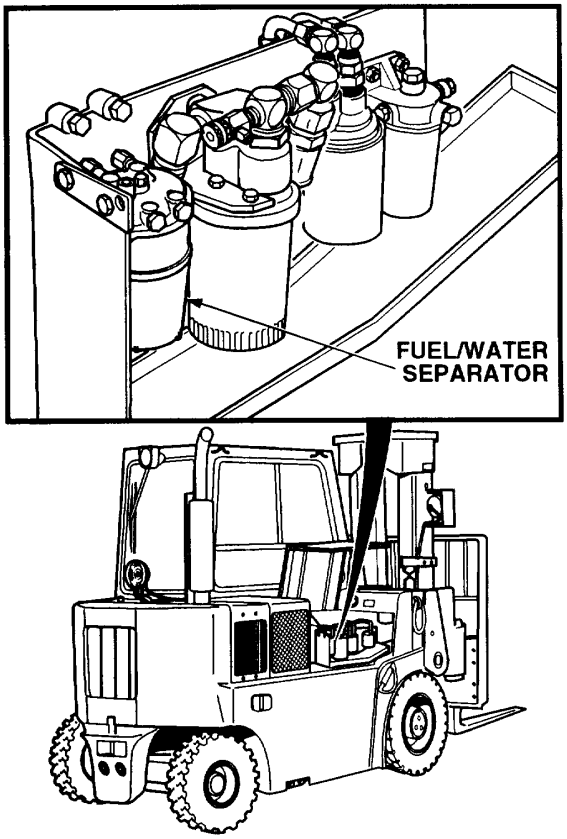

www.truck-freeworkshop.com

2. ENGINE CRANKS BUT WILL NOT RUN (CONT).

KNOWN INFO
Engine cranks. Glow plug indicator operates. Fuse 2 OK. Wire 6 OK. Wire 34 OK. Relay R4 ground wire OK. Wire 7 OK. Wire 9A OK. Relay R4 OK. Fuel shutoff solenoid OK. Glow plugs OK. Throttle adjustment correct. Fuel OK.
POSSIBLE PROBLEMS
Fuel injector(s) faulty.

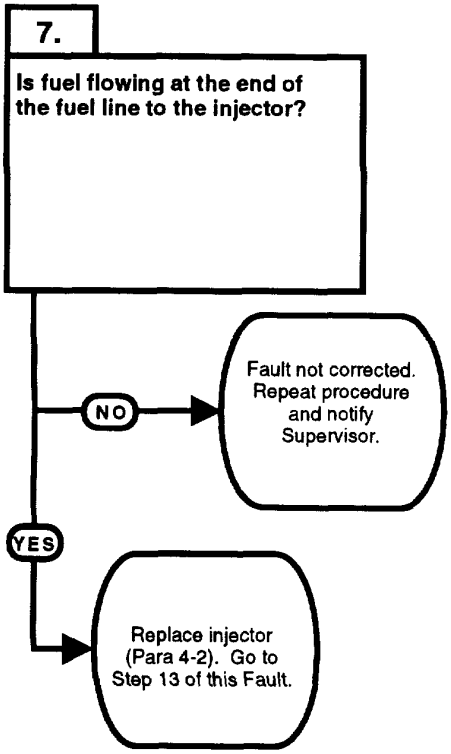

TEST OPTIONS
Operation test.
REASON FOR QUESTION
If injector pressure is incorrect, injector(s) is faulty.

www.truck-freeworkshop.com

INJECTOR PRESSURE TEST
(1) Remove fuel line from one injector at a time (Para 4-2). (2) Crank engine (TM 10-3930-669-10). (3) Look for fuel from fuel line. (a) If no fuel is present, repeat procedure and notify Supervisor. (b) If fuel is present, replace injector (Para 4-2) and go to Step 13 of this Fault. (4) Install fuel line (Para 4-2).

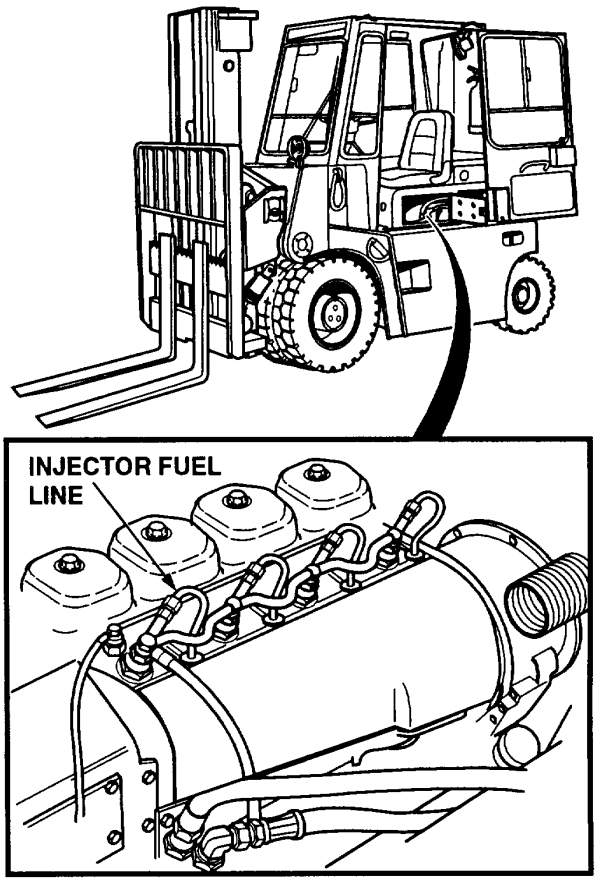

www.truck-freeworkshop.com

2. ENGINE CRANKS BUT WILL NOT RUN (CONT).

KNOWN INFO
Engine cranks. Glow plug indicator operates. Fuel shutoff solenoid OK. Glow plugs OK. Throttle adjustment correct. Fuel OK. Fuel injector(s) OK. Wire 34 OK. Relay R4 ground wire OK. Wire 7 OK. Wire 9A OK, Relay R4 OK.
POSSIBLE PROBLEMS
Fuse 2 faulty. Wire 6 faulty.

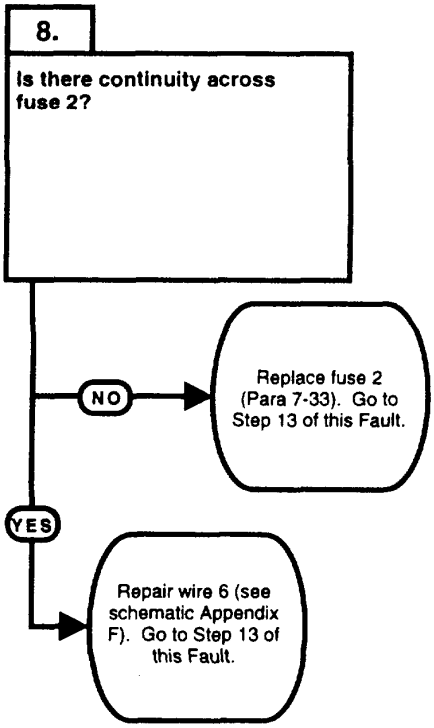

TEST OPTIONS
Continuity test. STE/ICE-R #91.
REASON FOR QUESTION
If continuity is not present. fuse 2 is faulty. If fuse 2 is OK, wire 6 is faulty.

www.truck-freeworkshop.com

CONTINUITY TEST
(1) Remove fuse 2 (Para 7-33). (2) Set multimeter select switch to OHMS. (3) Check continuity across fuse 2. (a) If there is no continuity, replace fuse 2. (b) If there is continuity, perform Step (4) below and replace wire 6 (See schematic Appendix F). (4) Install fuse 2.

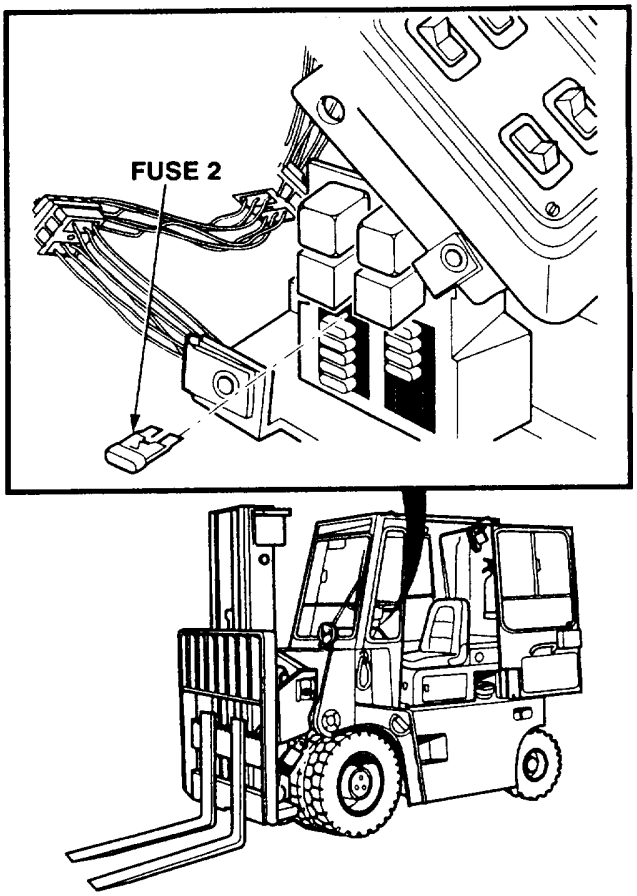

www.truck-freeworkshop.com

2. ENGINE CRANKS BUT WILL NOT RUN (CONT).

9.

Are 22 to 24 vdc measured on relay R4, terminal 86 cavity?

WARNING
Read WARNING on Page 2-53

NO → Repair wire 34 (see schematic Appendix F). Go to Step 13 of this Fault.

YES ↓

KNOWN INFO	TEST OPTIONS
Engine cranks. Glow plug indicator operates. Fuse 2 OK. Wire 6 OK. Fuel shutoff solenoid OK. Glow plugs OK. Throttle adjustment correct. Fuel OK. Fuel injector(s) OK.	Voltage test. STE/ICE-R #89.
POSSIBLE PROBLEMS	**REASON FOR QUESTION**
Wire 34 faulty. Relay R4 ground wire faulty. Wire 7 faulty. Wire 9A faulty. Relay R4 faulty.	If 22 to 24 vdc are not present, wire 34 is faulty.

10.

Is continuity measured between relay R4, terminal 85 cavity and a known good ground?

NO → Replace relay R4 ground wire (See schematic Appendix F). Go to Step 13 of this Fault.

YES ↓

KNOWN INFO	TEST OPTIONS
Engine cranks. Glow plug indicator operates. Fuse 2 OK. Wire 6 OK. Fuel shutoff solenoid OK. Glow plugs OK. Throttle adjustment correct. Fuel OK. Fuel injector(s) OK. Wire 34 OK.	Continuity test. STE/ICE-R #91.
POSSIBLE PROBLEMS	**REASON FOR QUESTION**
Relay R4 ground wire faulty. Wire 7 faulty. Wire 9A faulty. Relay R4 faulty.	If continuity is not present, relay R4 ground wire is faulty.

www.truck-freeworkshop.com

WARNING

Remove all jewelry such as rings, dog tags, bracelets, etc. If jewelry contacts battery terminal, a direct short may result in instant heating of tools, damage to equipment, and injury or death to personnel.

VOLTAGE TEST

(1) Remove relay R4 (Para 7-33).
(2) Set multimeter select switch to VOLTS DC.
(3) Connect positive (+) multimeter lead to relay R4, terminal 86 cavity.
(4) Connect negative (-) multimeter lead to a known good ground.
(5) Start engine (TM 10-3930-669-10).
  (a) If there are not 22 to 24 vdc present, perform Step (6) below and repair wire 34 (see schematic Appendix F).
  (b) If there are 22 to 24 vdc present, wire 34 is OK.
(6) Shut down engine.

CONTINUITY TEST

(1) Set multimeter select switch to OHMS.
(2) Check continuity between relay R4, terminal 85 cavity and a known good ground.
  (a) If there is no continuity, replace relay R4 ground wire (See schematic Appendix F).
  (b) If there is continuity, relay R4 ground wire is OK.

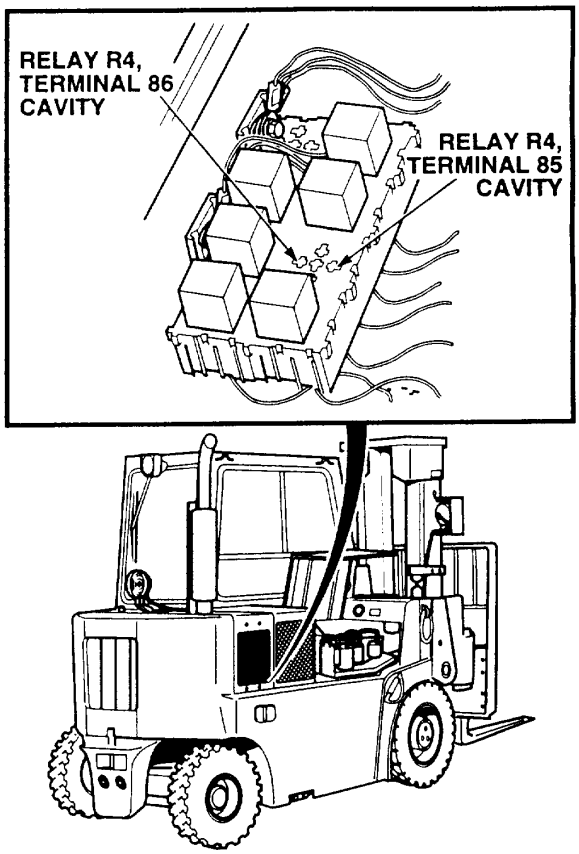

www.truck-freeworkshop.com

2. ENGINE CRANKS BUT WILL NOT RUN (CONT).

11.

WARNING
Read WARNING on Page 2-55

Are 22 to 24 vdc measured on relay R4, terminal 30 cavity?

NO → Repair wire 7 (see schematic Appendix F). Go to Step 13 of this Fault.

YES ↓

KNOWN INFO	TEST OPTIONS
Engine cranks. Glow plug indicator operates. Fuse 2 OK. Wire 6 OK. Fuel shutoff solenoid OK. Glow plugs OK. Throttle adjustment correct. Fuel OK. Fuel injector(s) OK. Wire 34 OK. Relay R4 ground wire OK.	Voltage test. STE/ICE-R #89.
POSSIBLE PROBLEMS	**REASON FOR QUESTION**
Wire 7 faulty. Wire 9A faulty. Relay R4 faulty.	If 22 to 24 vdc are not present. wire 7 is faulty.

12.

Is continuity measured between relay R4, terminal 87 cavity and connector P10, terminal 3?

NO → Repair wire 9A (see schematic Appendix F). Go to Step 13 of this Fault.

YES → Replace relay R4 (Para 7-33). Go to Step 13 of this Fault

KNOWN INFO	TEST OPTIONS
Engine cranks. Glow plug indicator operates. Fuse 2 OK. Wire 6 OK. Fuel shutoff solenoid OK. Glow plugs OK. Throttle adjustment correct. Fuel OK. Fuel injector(s) OK. Wire 34 OK. Relay R4 ground wire OK. Wire 7 OK.	Continuity test. STEAICE-R #91.
POSSIBLE PROBLEMS	**REASON FOR QUESTION**
Wire 9A faulty. Relay R4 faulty.	If continuity is not present, wire 6 is faulty. If wire 6 is OK, relay R4 Is faulty.

www.truck-freeworkshop.com

WARNING

Remove all jewelry such as rings, dog tags, bracelets, etc. If jewelry contacts battery terminal, a direct short may result in instant heating of tools, damage to equipment, and injury or death to personnel.

VOLTAGE TEST

(1) Set multimeter select switch to VOLTS DC.
(2) Connect positive (+) multimeter lead to relay R4, terminal 30 cavity.
(3) Connect negative (-) multimeter lead to a known good ground.
(4) Set MAIN POWER switch to ON position (TM 10-3930-669-10).
  (a) If there are not 22 to 24 vdc present, perform Step (5) below and repair wire 7 (see schematic Appendix F).
  (b) If there are 22 to 24 vdc present, wire 7 is OK.
(5) Set MAIN POWER switch to OFF position.

CONTINUITY TEST

(1) Set multimeter select switch to OHMS.
(2) Check continuity between relay R4, terminal 87 cavity and connector P10, terminal 3.
  (a) If there is no continuity, repair wire 9A (see schematic Appendix F).
  (b) If there is continuity, replace relay R4 (Para 7-33).
(3) Install relay R4.

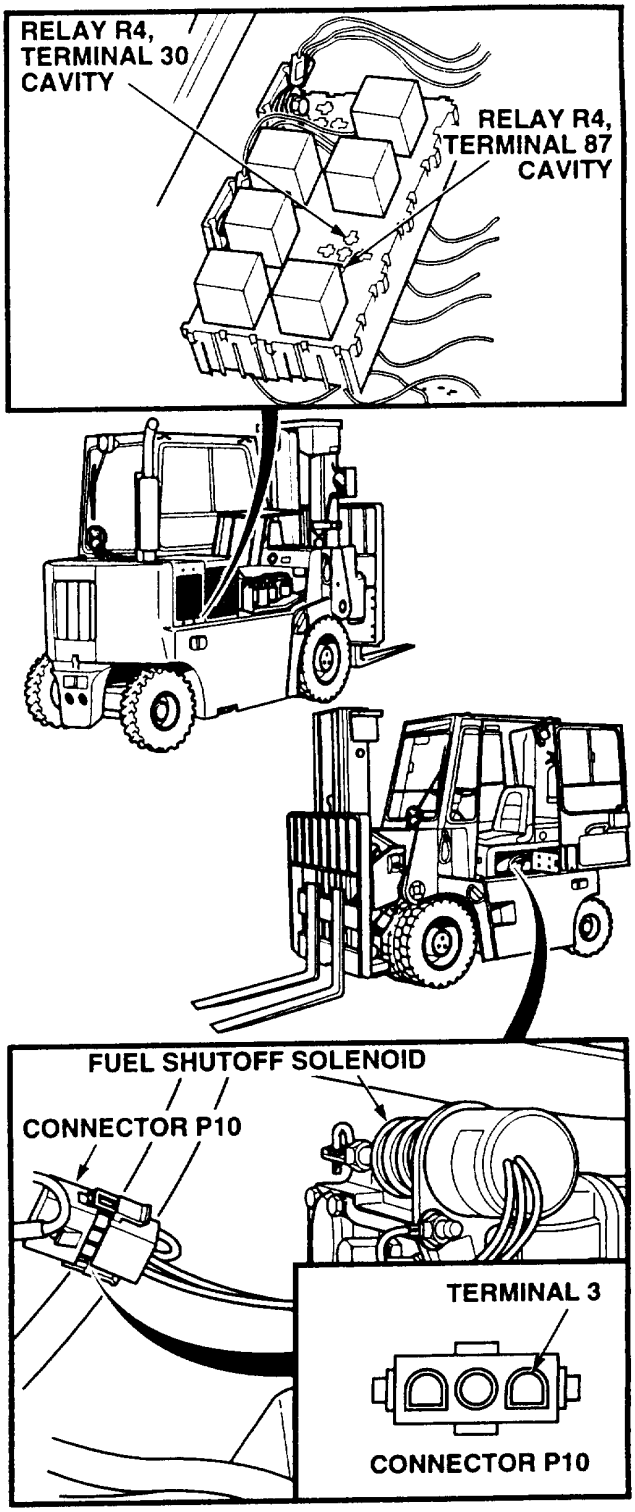

www.truck-freeworkshop.com

2. ENGINE CRANKS BUT WILL NOT RUN (CONT).

KNOWN INFO
Engine cranks. Glow plug indicator operates, Fuel shutoff solenoid OK. Glow plugs OK. Throttle adjustment correct. Fuel OK. Fuel injector(s) OK. Fuse 2 OK. Wire 6 OK. Wire 34 OK. Relay R4 ground wire OK. Wire 7 OK. Wire 9A OK. Relay R4 OK.
POSSIBLE PROBLEMS

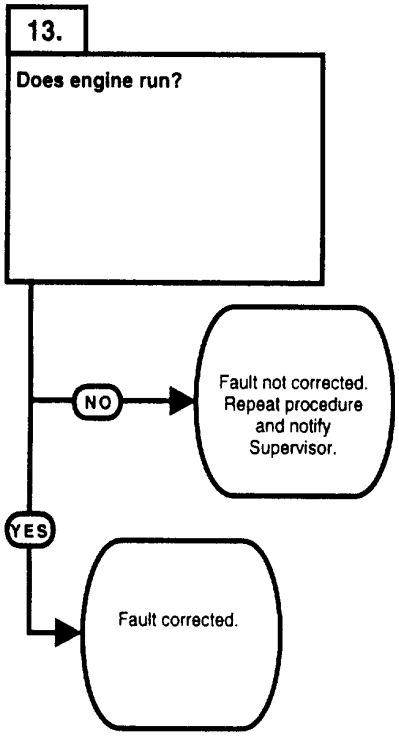

TEST OPTIONS
Verify repair.
REASON FOR QUESTION
If engine runs, fault has been corrected.

www.truck-freeworkshop.com

VERIFY REPAIR
(1) Start engine (TM 10-3930-669-10). (a) If engine does not start, fault not corrected. Perform Step (2) below. Repeat procedure and notify Supervisor. (b) If engine starts, fault corrected. (2) Shut down engine.

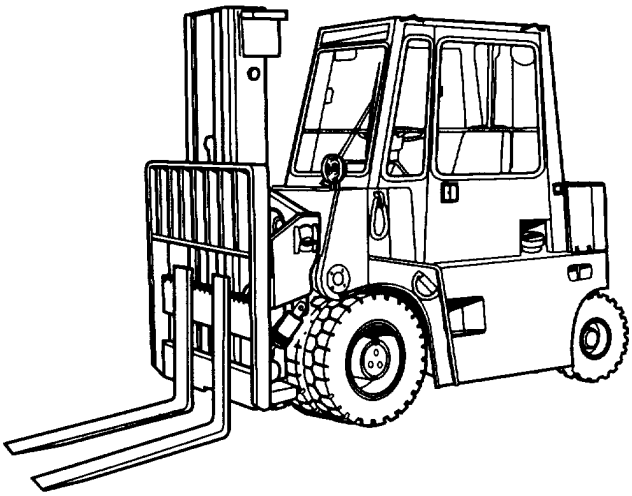

www.truck-freeworkshop.com

2-13. ENGINE SYSTEM TROUBLESHOOTING (CONT).

3. LOW ENGINE OIL PRESSURE (OIL PRESSURE GAUGE CONTINUOUSLY READS LESS THAN 30 TO 60 PSI [207-414 KPA]).

INITIAL SETUP

Tools and Special Tools

Tool Kit, General Mechanic's: Automotive (Item 1, Appendix B)
Multimeter (Item 2, Appendix B)
STE/ICE-R (Item 14, Appendix B)

Equipment Condition

Engine OFF (TM 10-3930-669-10)
MAIN POWER switch OFF (TM 10-3930-669-10)
Parking brake applied (TM 10-3930-669-10)
Wheels chocked (TM 10-3930-669-10)

References

TM 10-3930-669-10

KNOWN INFO
Oil level OK.

POSSIBLE PROBLEMS
Engine faulty. Gauge wire 5 faulty. Gauge ground wire faulty. Wire 16 faulty. Oil pressure gauge faulty. Oil pressure sensor faulty.

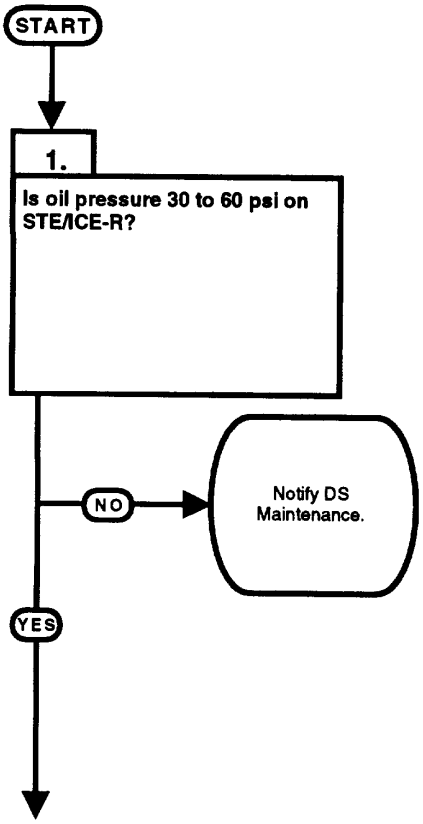

TEST OPTIONS
Engine oil pressure test. STE/ICE-R #50.

REASON FOR QUESTION
This question eliminates a possible problem or group of possible problems determining where troubleshooting continues.

www.truck-freeworkshop.com

ENGINE OIL PRESSURE TEST

(1) Remove engine oil pressure sensor (Para 7-42).
(2) Perform Confidence Test.
(3) Start engine (TM 10-3930-669-10) and observe display.
  (a) If 30 to 60 psi are not displayed, Notify DS Maintenance.
  (b) If 30 to 60 psi are displayed, perform Steps (4) and (5) below and go to Step 2 of this Fault.
(4) Shut down engine.
(5) Install engine oil pressure sensor.

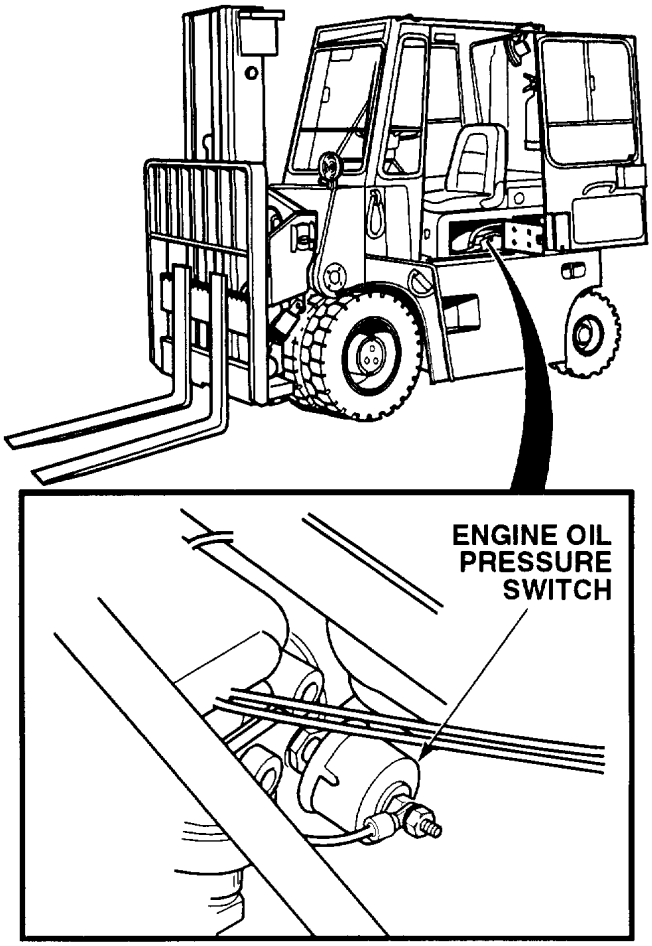

www.truck-freeworkshop.com

3. LOW ENGINE OIL PRESSURE (OIL PRESSURE GAUGE CONTINUOUSLY READS LESS THAN 30 TO 60 PSI [241-276 KPA]) (CONT).

KNOWN INFO
Oil level OK. Engine OK.
POSSIBLE PROBLEMS
Oil pressure gauge faulty. Gauge wire 5 faulty. Gauge ground wire faulty. Wire 16 faulty. Oil pressure sensor faulty.

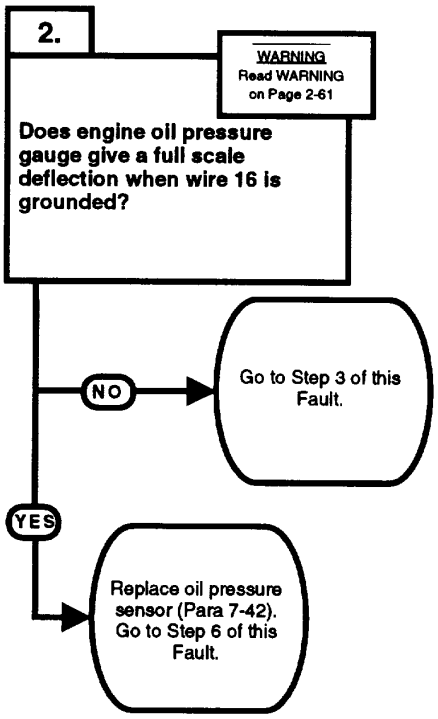

TEST OPTIONS
Gauge operation test.
REASON FOR QUESTION
If engine oil pressure gauge does not read at full scale, gauge is faulty. If gauge reads at full scale, sending unit is faulty.

www.truck-freeworkshop.com

WARNING

Remove all jewelry such as rings, dog tags, bracelets, etc. If jewelry contacts battery terminal, a direct short may result in instant heating of tools, damage to equipment, and injury or death to personnel.

GAUGE OPERATION TEST
(1) Remove and ground sensor wire 16 (Para 7-42) (2) Set MAIN POWER switch to ON position (TM 10-3930-669-10). (3) Set engine switch to ignition position (TM 10-3930-669-10). (4) Observe gauge needle for reading. If gauge has a full scale deflection, perform Steps (5) through (7) below and replace oil pressure sensor (Para 7-42). (5) Install sensor wire 16 (Para 7-42). (6) Set engine switch to off position. (7) Set MAIN POWER switch to OFF position.

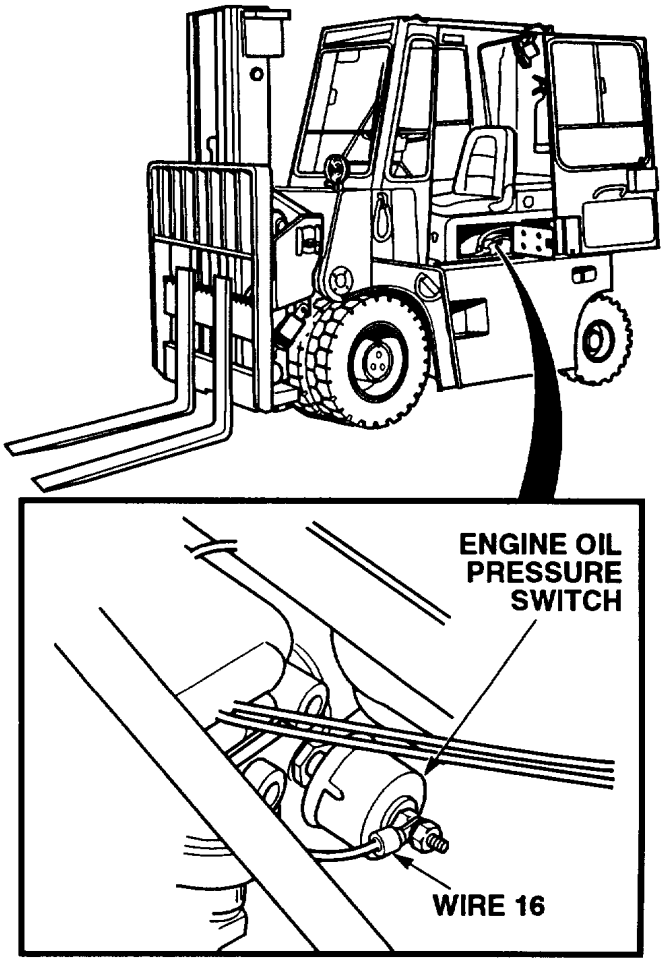

www.truck-freeworkshop.com

KNOWN INFO
Oil level OK. Engine OK. Oil pressure gauge OK.
POSSIBLE PROBLEMS
Gauge wire 5 faulty. Gauge ground wire faulty. Wire 16 faulty. Oil pressure sensor faulty.

3.

WARNING
Read WARNING on Page 4-63

Are 22 to 24 vdc measured at engine oil pressure gauge, terminal I?

NO → Repair gauge wire 5 (see schematic Appendix F). Go to Step 6 of this Fault.

YES ↓

TEST OPTIONS
Voltage test. STE/ICE-R #89.
REASON FOR QUESTION
If 22 to 24 vdc are not present, gauge wire 5 is faulty.

KNOWN INFO
Oil level OK. Engine OK. Oil pressure gauge OK. Gauge wire 5 OK.
POSSIBLE PROBLEMS
Gauge ground wire faulty. Wire 16 faulty. Oil pressure sensor faulty.

4.

Is continuity measured between engine oil pressure gauge, terminal G and a known good ground?

NO → Repair gauge ground wire (see schematic Appendix F). Go to Step 6 of this Fault.

YES ↓

TEST OPTIONS
Continuity test. STE/ICE-R #91.
REASON FOR QUESTION
If continuity is not present, gauge ground wire is faulty.

www.truck-freeworkshop.com

WARNING

Remove all jewelry such as rings, dog tags, bracelets, etc. If jewelry contacts battery terminal, a direct short may result in instant heating of tools, damage to equipment, and injury or death to personnel.

VOLTAGE TEST

(1) Remove instrument panel (Para 7-8).
(2) Set multimeter select switch to VOLTS DC.
(3) Connect positive (+) multimeter lead to engine oil pressure gauge, terminal I.
(4) Connect negative (-) multimeter lead to a known good ground.
(5) Set MAIN POWER switch to ON position (TM 10-3930-669-10).
(6) Set engine switch to ignition position (TM 10-3930-669-10).
  (a) If there are not 22 to 24 vdc present, perform Steps (7) and (8) below and repair gauge wire 5 (see schematic Appendix F).
  (b) If there are 22 to 24 vdc present, lead wire 5 is OK.
(7) Set engine switch to off position.
(8) Set MAIN POWER switch to OFF position.

CONTINUITY TEST

(1) Set multimeter select switch to OHMS.
(2) Check continuity between suspect gauge, terminal G and a known good ground.
  (a) If there is no continuity, repair gauge ground wire (see schematic Appendix F).
  (b) If there is continuity, gauge ground wire is OK.

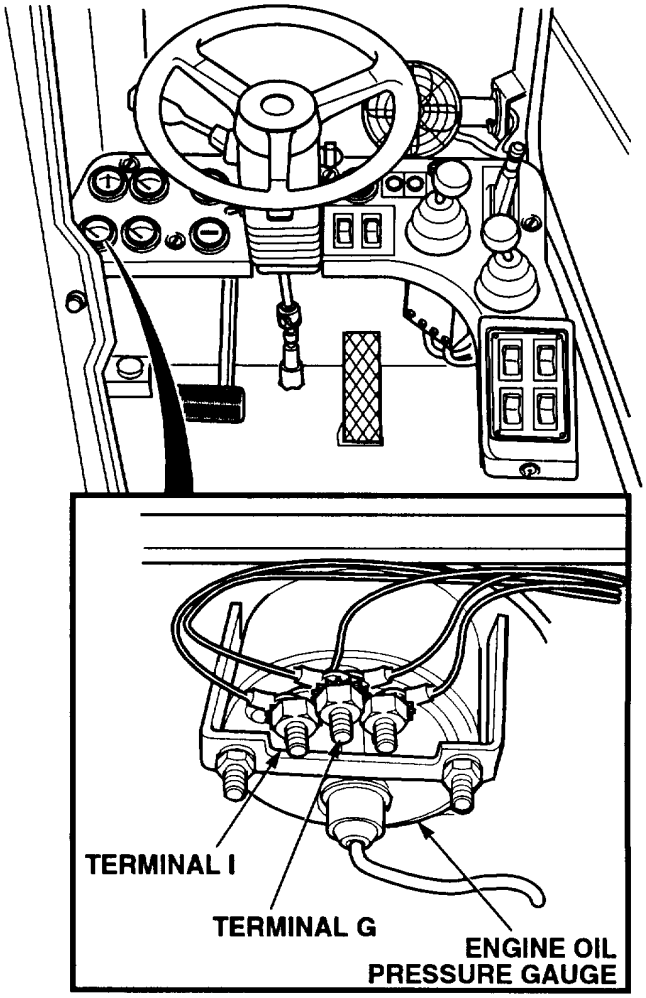

www.truck-freeworkshop.com

3. LOW ENGINE OIL PRESSURE (OIL PRESSURE GAUGE CONTINUOUSLY READS LESS THAN 30 TO 60 PSI [241-276 KPA]) (CONT).

KNOWN INFO	TEST OPTIONS
Oil level OK. Engine OK. Oil pressure gauge OK. Gauge wire 5 OK. Gauge ground wire OK.	Continuity test. STE/ICE-R #91.
POSSIBLE PROBLEMS	**REASON FOR QUESTION**
Wire 16 faulty. Oil pressure sensor faulty.	If continuity is not present, sensor wire 16 is faulty.

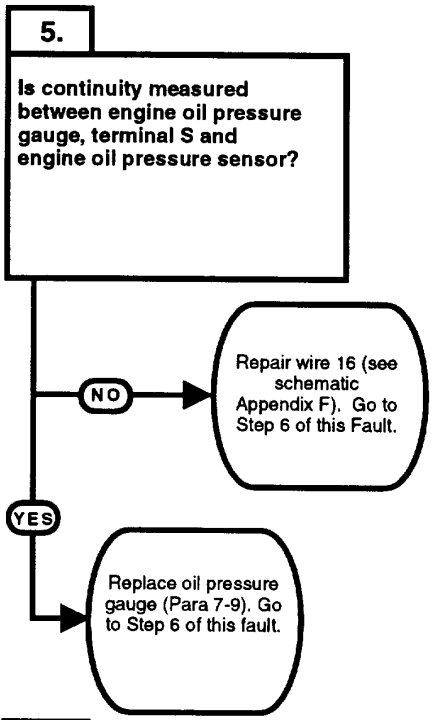

KNOWN INFO	TEST OPTIONS
Oil level OK. Engine OK. Gauge wire 5 OK. Gauge ground wire OK. Wire 16 OK. Oil pressure gauge OK. Oil pressure sensor OK.	Verify repair.
POSSIBLE PROBLEMS	**REASON FOR QUESTION**
	If oil pressure gauge reads 30 to 60 psi (207-414 kPa), fault has been corrected.

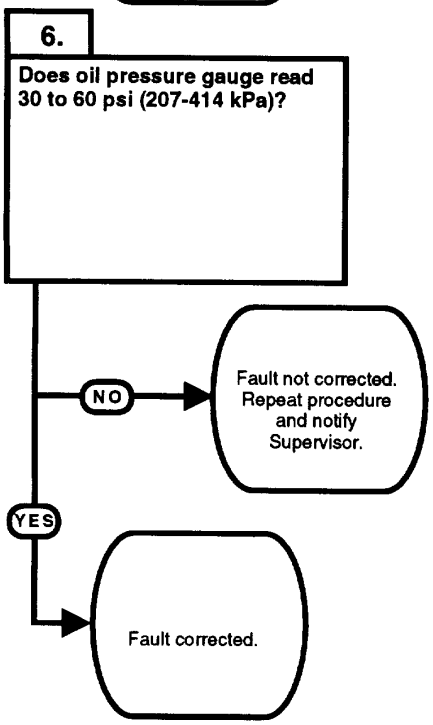

www.truck-freeworkshop.com

CONTINUITY TEST

(1) Remove and ground sensor wire 16 (Para 7-42).
(2) Set multimeter select switch to OHMS.
(3) Check continuity between engine oil pressure gauge, terminal S and a known good ground.
  (a) If there is no continuity, repair wire 16 (see schematic Appendix F).
  (b) If there is continuity, sensor wire 16 is OK.
(4) Install sensor wire 15 (Para 7-42).
(5) Install instrument panel (Para 7-8).

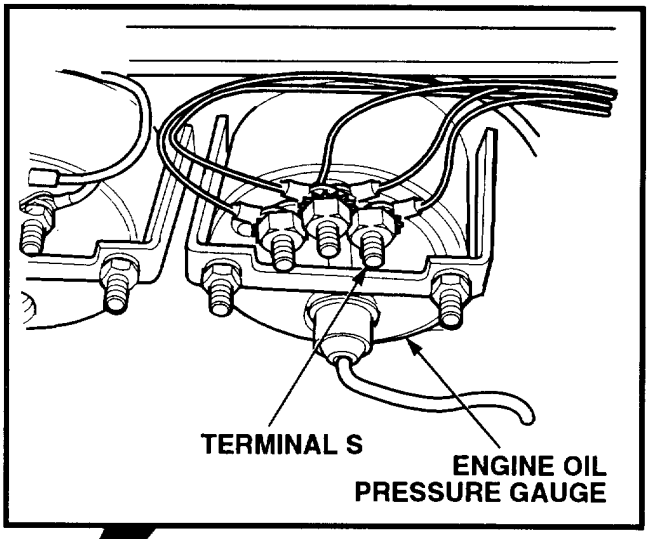

VERIFY REPAIR

(1) Start engine (TM 10-3930-669-10).
(2) Observe engine oil pressure gauge.
  (a) If engine oil pressure is not 30 to 60 psi (625-750 kPa), fault not corrected. Perform Step (3) below. Repeat procedure and notify Supervisor.
  (b) If engine oil pressure is 30 and 60 psi (625-750 kPa), fault corrected.
(3) Shut down engine.

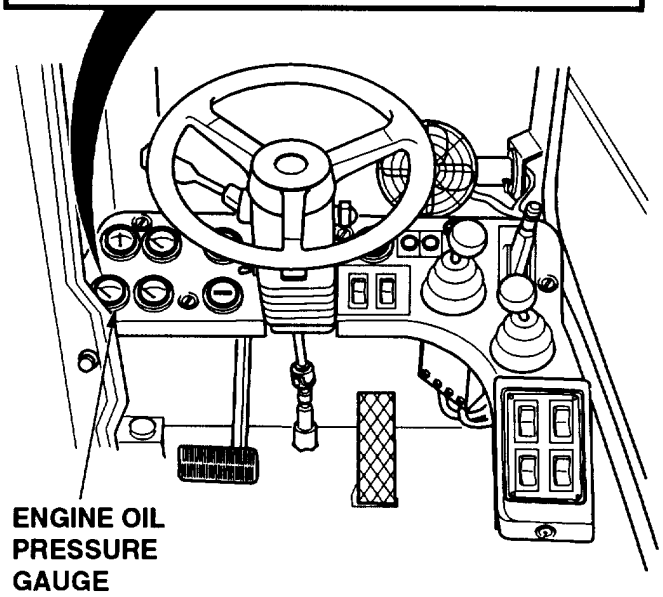

www.truck-freeworkshop.com

2-13. ENGINE SYSTEM TROUBLESHOOTING (CONT).

4. EXCESSIVE ENGINE OIL CONSUMPTION.

INITIAL SETUP

Tools and Special Tools

Tool Kit, General Mechanic's: Automotive (Item 1, Appendix B)
Multimeter (Item 2, Appendix B)

Equipment Condition

Engine OFF (TM 10-3930-669-10)
MAIN POWER switch OFF (TM 10-3930-669-10)
Parking brake applied (TM 10-3930-669-10)
Wheels chocked (TM 10-3930-669-10)

References

TM 10-3930-669-10

KNOWN INFO
Engine operates.
POSSIBLE PROBLEMS
Valve cover gasket(s) faulty. Engine oil hose(s) faulty. Engine oil sensor(s) faulty. Engine oil cooler faulty.

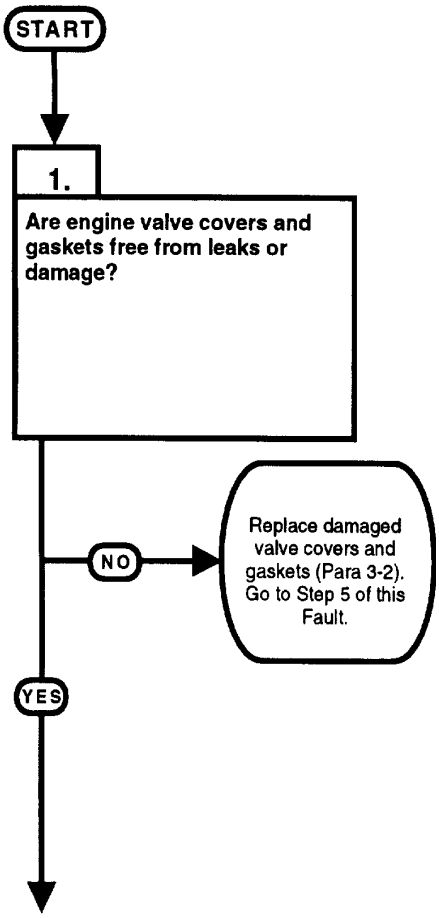

TEST OPTIONS
Visual inspection.
REASON FOR QUESTION
If engine valve covers or gaskets are faulty, oil will be consumed excessively.

www.truck-freeworkshop.com

VISUAL INSPECTION
(1) Remove engine ventilation panel (Para 6-2). (2) Check engine valve covers and gaskets for leaks or damage. (a) Secure loose valve cover(s) or replace gasket(s) (Para 3-2). (b) If valve covers are not loose or leaking, cover gaskets are OK. (3) Install engine ventilation panel.

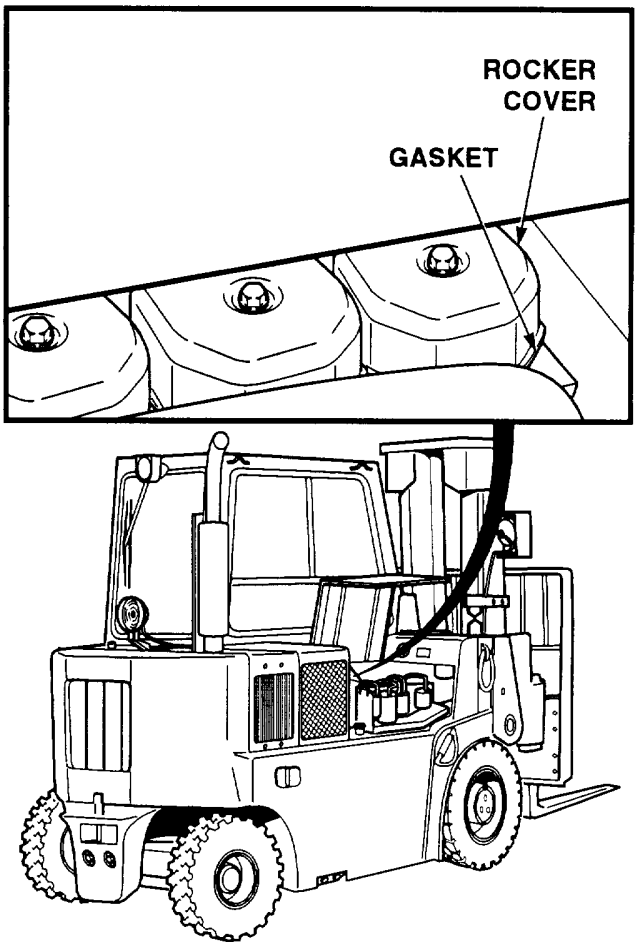

www.truck-freeworkshop.com

4. EXCESSIVE ENGINE OIL CONSUMPTION (CONT).

KNOWN INFO
Engine operates. Valve cover gasket(s) OK.
POSSIBLE PROBLEMS
Engine oil hose(s) faulty. Engine oil sensor(s) faulty. Engine oil cooler faulty.

2.

Are engine oil hoses free from leaks or damage?

NO → Tighten or replace damaged oil hoses. Go to Step 5 of this Fault.

YES ↓

TEST OPTIONS
Visual inspection.
REASON FOR QUESTION
If oil hoses are leaking, oil will be consumed excessively.

www.truck-freeworkshop.com

VISUAL INSPECTION
(1) Open engine access panel (TM 10-3930-669-10). (2) Check engine oil hoses for leaks and damage by visual and tactile inspection. (a) If hoses and fittings are loose, leaking, or damaged, tighten fittings or replace hose(s). (b) If hoses and fittings are not loose, leaking, or damaged, oil hoses are OK.

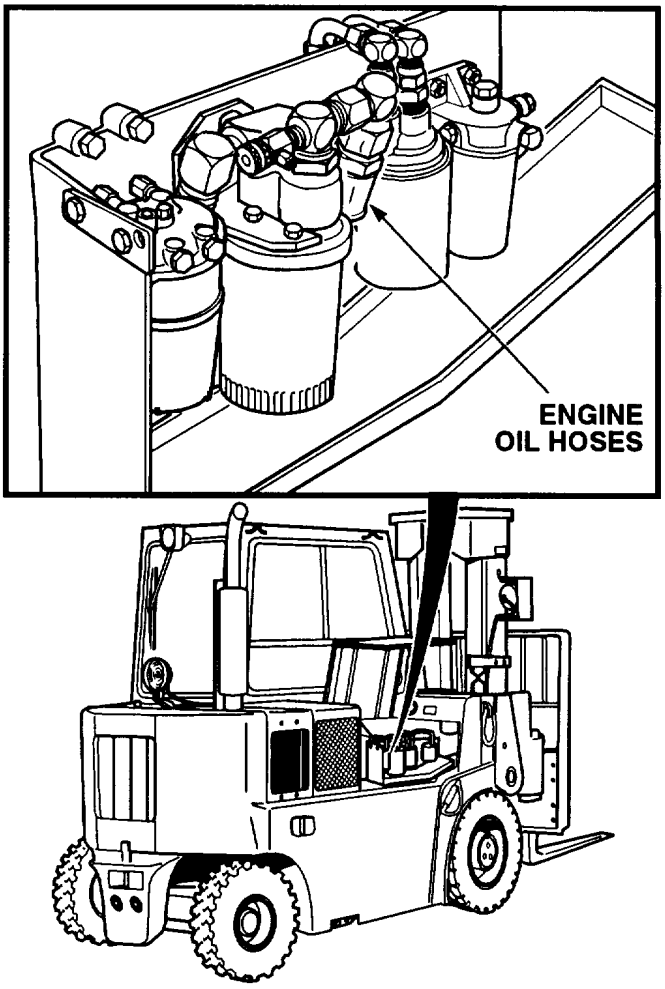

www.truck-freeworkshop.com

4. EXCESSIVE ENGINE OIL CONSUMPTION (CONT).

KNOWN INFO
Engine operates. Valve cover gasket(s) OK. Engine oil hoses OK.
POSSIBLE PROBLEMS
Engine oil sensor(s) faulty. Engine oil cooler faulty.

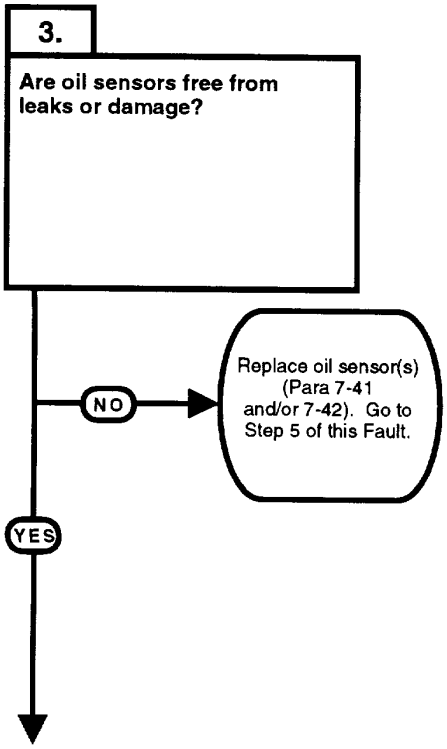

TEST OPTIONS
Visual inspection.
REASON FOR QUESTION
If sensor(s) is leaking oil, oil will be consumed excessively.

www.truck-freeworkshop.com

VISUAL INSPECTION
(1) Open right-hand engine access cover (TM 10-3930-669-10). (2) Check oil sensor(s) for leaks or damage. (a) If oil sensor(s) is loose, leaking, or damaged, tighten or replace damaged units (Para 7-41 and/or 7-42). (b) If oil sensors are not leaking, oil sensors are OK. (3) Close engine access panel (TM 10-3930-669-10). (4) Close right-hand engine access cover.

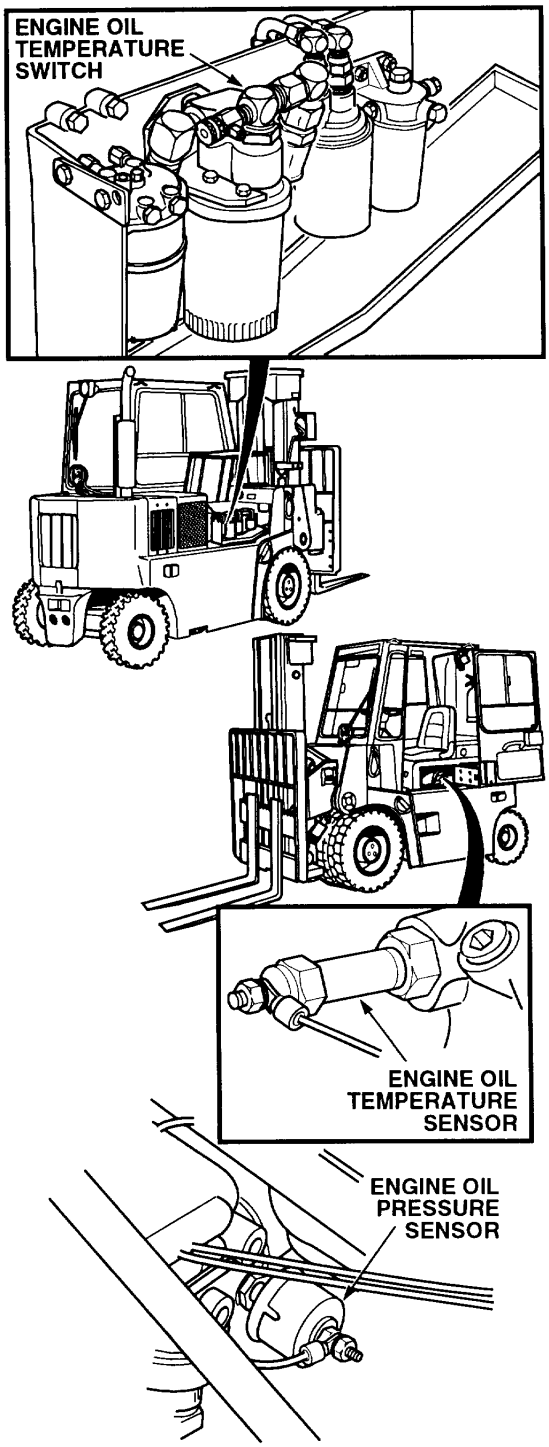

www.truck-freeworkshop.com

4. EXCESSIVE ENGINE OIL CONSUMPTION (CONT).

KNOWN INFO
Engine operates. Valve cover gasket(s) OK. Valve cover gasket(s) OK. Engine oil hoses OK. Engine oil sensor(s) OK.
POSSIBLE PROBLEMS
Engine oil cooler faulty.

4. Is engine oil cooler free from leaks or damage?

NO → Replace engine oil cooler (Para 3-7). Go to Step 5 of this Fault.

YES ↓

TEST OPTIONS
Visual inspection.
REASON FOR QUESTION
If engine oil cooler is leaking or damaged, oil will be consumed excessively.

KNOWN INFO
Engine operates. Valve cover gasket(s) OK. Valve cover gasket(s) OK. Engine oil hoses OK. Engine oil sensor(s) OK. Engine oil cooler OK.
POSSIBLE PROBLEMS

5. Is oil consumption normal?

NO → Fault not corrected. Repeat procedure and notify Supervisor.

YES → Fault corrected.

TEST OPTIONS
Verify repair.
REASON FOR QUESTION
If engine oil consumption is normal, fault has been corrected.

www.truck-freeworkshop.com

VISUAL INSPECTION

(1) Remove cab and engine cowling (Para 15-2).
(2) Inspect engine oil cooler for leaks and other damage.
  (a) If oil cooler is loose, leaking, or damaged, tighten or replace oil cooler (Para 3-7).
  (b) If oil cooler is not leaking or damaged, oil cooler is OK.
(3) Install engine cowling and cab.

VERIFY REPAIR

Operate engine over the period of time specified in the lubrication order (LO 10-3930-669-12).
  (a) If engine oil consumption exceeds 10 quarts per 250 hours of operation, usage is excessive, fault not corrected. Repeat procedure and notify Supervisor.
  (b) If engine oil consumption does not exceed 10 quarts per 250 hours of operation, fault corrected.

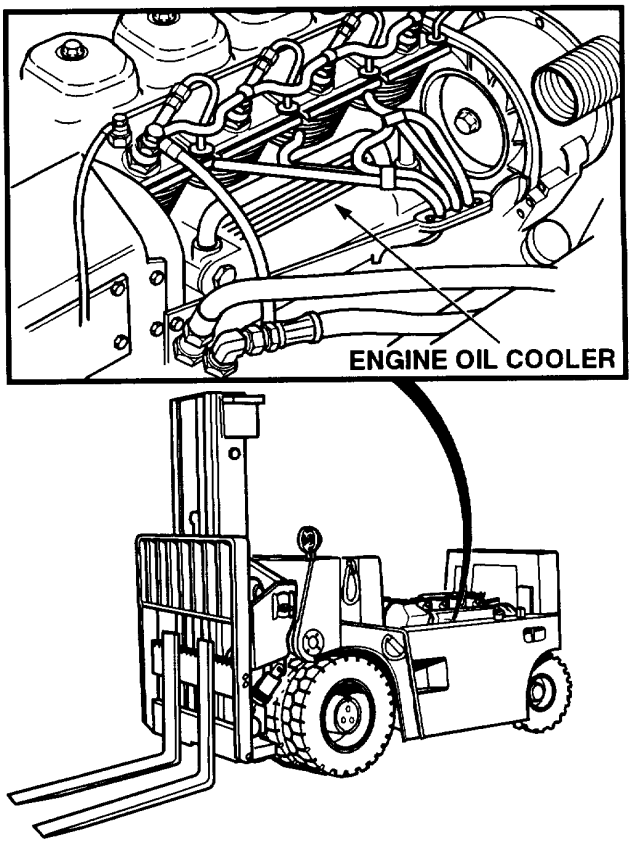

www.truck-freeworkshop.com

2-13. ENGINE SYSTEM TROUBLESHOOTING (CONT).

5. EXCESSIVE SMOKE.

INITIAL SETUP

Tools and Special Tools

Tool Kit, General Mechanic's: Automotive (Item 1, Appendix B)
STE/ICE-R (Item 14, Appendix B)

Equipment Condition

Engine OFF (TM 10-3930-669-10)
MAIN POWER switch OFF (TM 10-3930-669-10)
Parking brake applied (TM 10-3930-669-10)
Wheels chocked (TM 10-3930-669-10)

References

TM 10-3930-669-10

KNOWN INFO
Fuel filter OK. Air filter OK.
POSSIBLE PROBLEMS
Air intake system leaking. Fuel connections leaking. Fuel injector(s) faulty. Air intake obstructed. Fuel injector pump faulty.

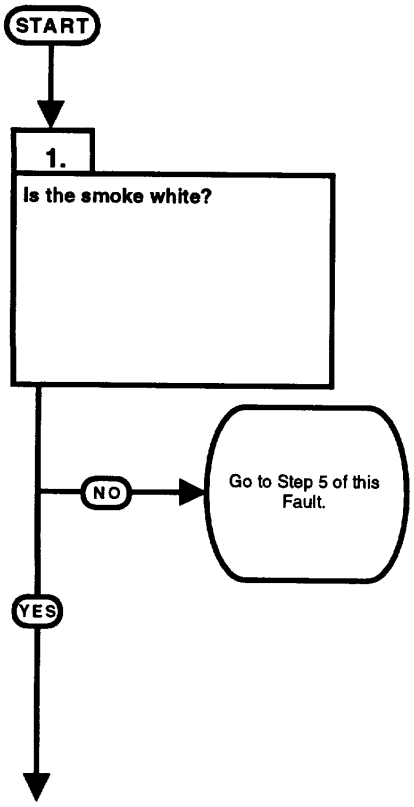

TEST OPTIONS
Visual inspection.
REASON FOR QUESTION
Too much fuel in the fuel air mix causes black smoke. Too little fuel in the fuel air mix causes white smoke.

www.truck-freeworkshop.com

VISUAL INSPECTION
Visually observe the exhaust outlet during operation of the forklift.

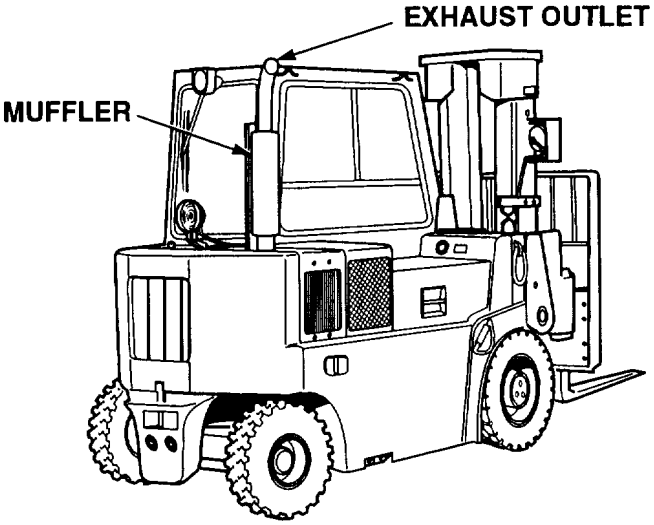

www.truck-freeworkshop.com

5. EXCESSIVE SMOKE (CONT).

KNOWN INFO
Fuel filter OK. Air filter OK.
POSSIBLE PROBLEMS
Air intake system leaking. Fuel connections leaking. Fuel injector(s) faulty. Air intake obstructed. Fuel injector pump faulty.

2.

Is the air inlet system free of leaks, cracks, or holes?

NO → Notify DS Maintenance.

YES ↓

TEST OPTIONS
Visual inspection.
REASON FOR QUESTION
Intake air leaks can allow too much air in the fuel air mixture.

KNOWN INFO
Fuel filter OK. Air filter OK. Air intake system not leaking.
POSSIBLE PROBLEMS
Fuel connections leaking. Fuel injector(s) faulty. Air intake obstructed. Fuel injector pump faulty.

3.

Are the fuel lines and hoses in good condition?

NO → Repair or tighten lines and fittings as required. Go to Step 6 of this Fault.

YES ↓

TEST OPTIONS
Visual inspection.
REASON FOR QUESTION
Loose/leaking fuel lines could introduce air into the fuel resulting in too much air in the fuel air mixture.

www.truck-freeworkshop.com

VISUAL INSPECTION
(1) Remove engine ventilation panel (Para 6-2). (2) Inspect intake manifold and air inlet piping for cracks, holes, and leaks. (a) If leaks, cracks, or holes are present in the piping, repair piping (para 4-4). (b) If manifold is damaged notify DS maintenance.

VISUAL INSPECTION
(1) Open engine access covers (TM 10-3930-669-10). (2) Perform visual check of fuel lines for evidence of leaks or looseness. Repair as necessary.

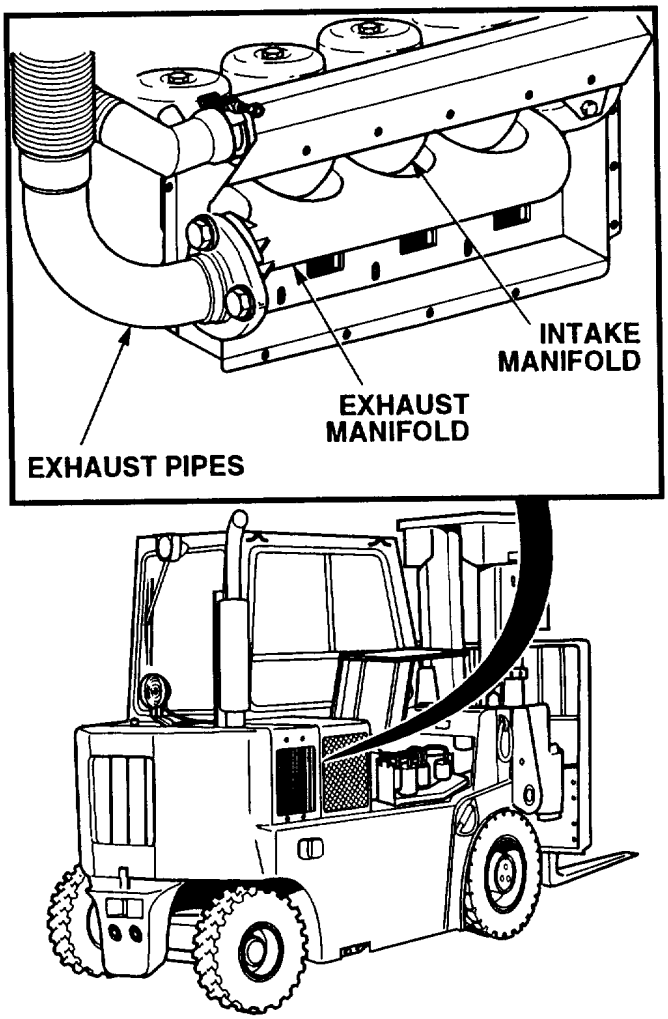

www.truck-freeworkshop.com

5. EXCESSIVE SMOKE (CONT).

KNOWN INFO
Fuel filter OK. Air filter OK. Air intake system not leaking. Fuel connections not leaking.
POSSIBLE PROBLEMS
Fuel injector(s) faulty. Air intake obstructed. Fuel injector pump faulty.

TEST OPTIONS
Visual inspection.
REASON FOR QUESTION
If the engine is running roughly or missing, a fuel injector may be clogged.

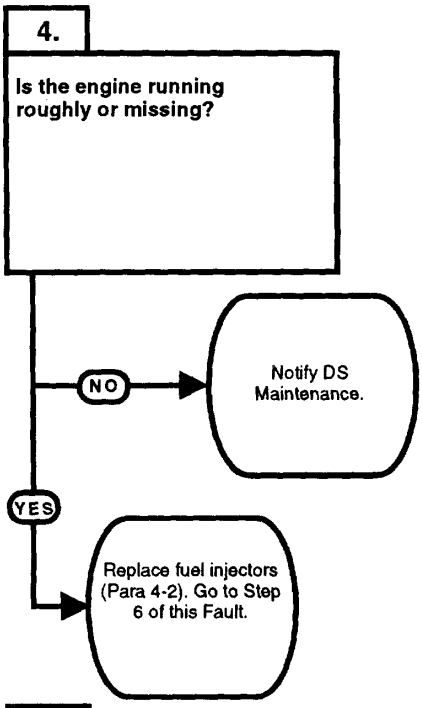

KNOWN INFO
Fuel filter OK. Air filter OK. Air intake system not leaking. Fuel connections not leaking. Fuel injectors OK.
POSSIBLE PROBLEMS
Air intake obstructed. Fuel injector pump faulty.

TEST OPTIONS
Visual inspection.
REASON FOR QUESTION
If the air intake system is damaged or obstructed the fuel air mixture may not have enough air.

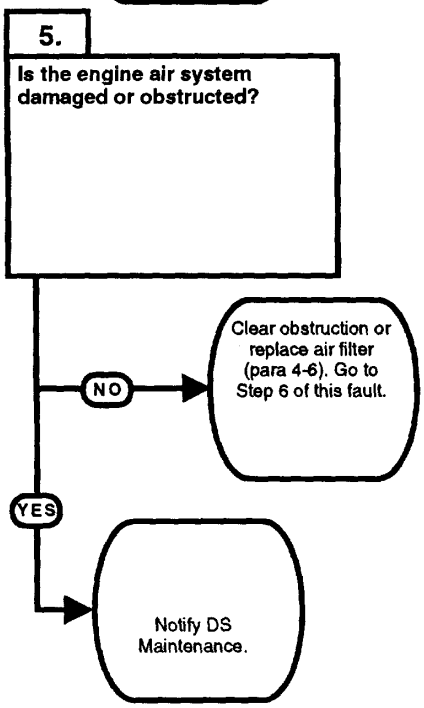

www.truck-freeworkshop.com

VISUAL INSPECTION
(1) Start engine (TM 10-3930-669-10). (2) Listen for roughness or missing. (3) If engine misses or runs rough replace injectors (Para 4-2). (4) Shut down engine.

VISUAL INSPECTION
Check air cleaner filter assembly (Para 4-4). (a) If air cleaner filter assembly is dirty, replace filter (Para 4-4). (b) If air cleaner filter assembly is not dirty, notify DS Maintenance.

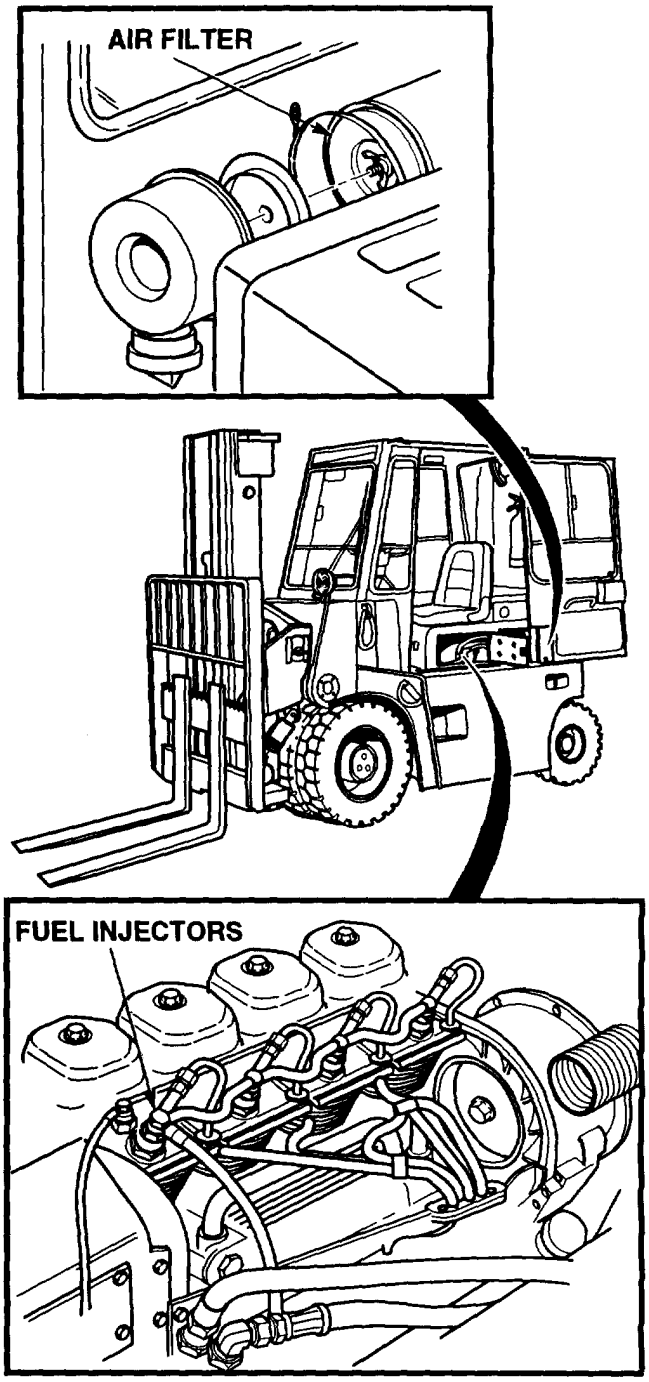

www.truck-freeworkshop.com

5. EXCESSIVE SMOKE (CONT).

KNOWN INFO
Fuel filter OK. Air filter OK. Air intake system not leaking. Fuel connections not leaking. Fuel injectors OK. Air intake not obstructed Fuel injector pump OK.
POSSIBLE PROBLEMS

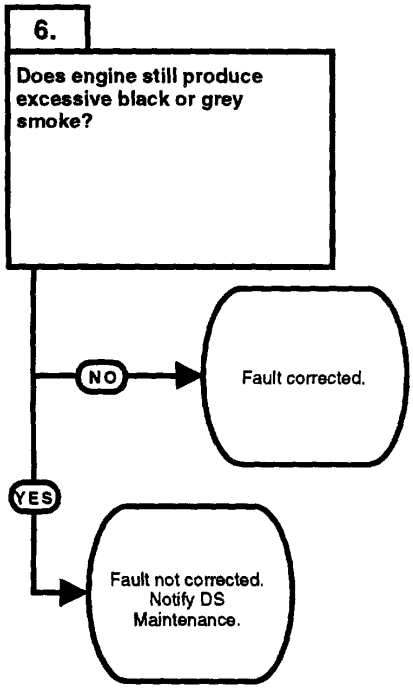

TEST OPTIONS
Verify repair.
REASON FOR QUESTION
If engine does not produce excessive black or gray smoke, fault has been corrected.

www.truck-freeworkshop.com

VERIFY REPAIR
(1) Start engine (TM 10-3930-669-10). (2) Observe tailpipe after 10 minutes of operation. (a) If engine does not produce excessive black or gray smoke, fault corrected. (b) If engine produces excessive black or gray smoke, fault not corrected. Perform Step (3) below. Repeat procedure and notify Supervisor. (3) Shut down engine.

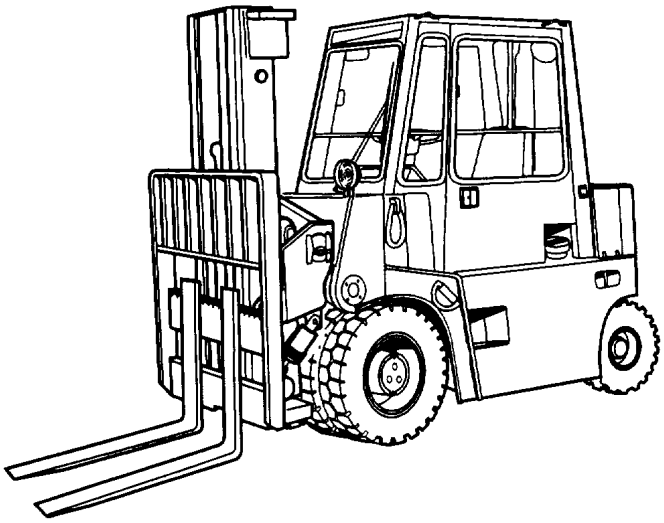

www.truck-freeworkshop.com

2-13. ENGINE SYSTEM TROUBLESHOOTING (CONT).

6. ENGINE OVERHEATS (ENGINE OIL TEMPERATURE OVER 250°F [121"C]).

INITIAL SETUP

Tools and Special Tools

Tool Kit, General Mechanic's: Automotive (Item 1, Appendix B)
STE/ICE-R (Optional) (Item 14, Appendix B)

Equipment Condition

Engine OFF (TM 10-3930-669-10)
MAIN POWER switch OFF (TM 10-3930-669-10)
Parking brake applied (TM 10-3930-669-10)
Wheels chocked (TM 10-3930-669-10)

References

TM 10-3930-669-10

KNOWN INFO
Engine oil level OK. Engine oil temperature is over 250'
POSSIBLE PROBLEMS
Engine oil temperature sensor faulty. Engine oil temperature gauge faulty. Gauge wire 5 faulty. Gauge ground wire faulty. Wire 19 faulty. Cylinder head fins and air outlet frame dirty. Oil cooler fins dirty. Oil cooler faulty.

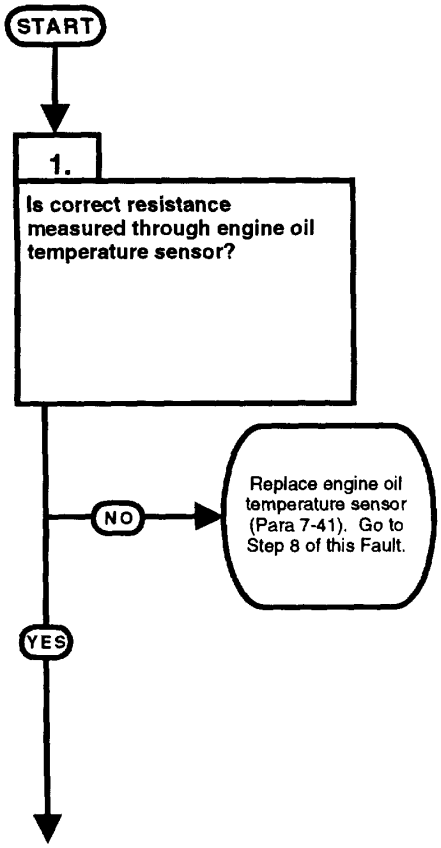

TEST OPTIONS
Continuity test.
REASON FOR QUESTION
When engine is at room temperature, resistance measurement of oil temperature sensor should be 400-550 ohms.

www.truck-freeworkshop.com

CONTINUITY TEST

(1) Remove and ground sensor wire 19 (Para 7-41).

(2) Set multimeter select switch to ohms.

(3) Connect positive (+) multimeter lead to engine oil temperature sensor.

(4) Connect negative (-) multimeter lead to a known good ground.

(a) At room temperature, if resistance is other than 400-550 ohms, replace engine oil temperature sensor (Para 7-41).

(b) At room temperature, if resistance is 400-550 ohms, engine oil temperature sensor is OK.

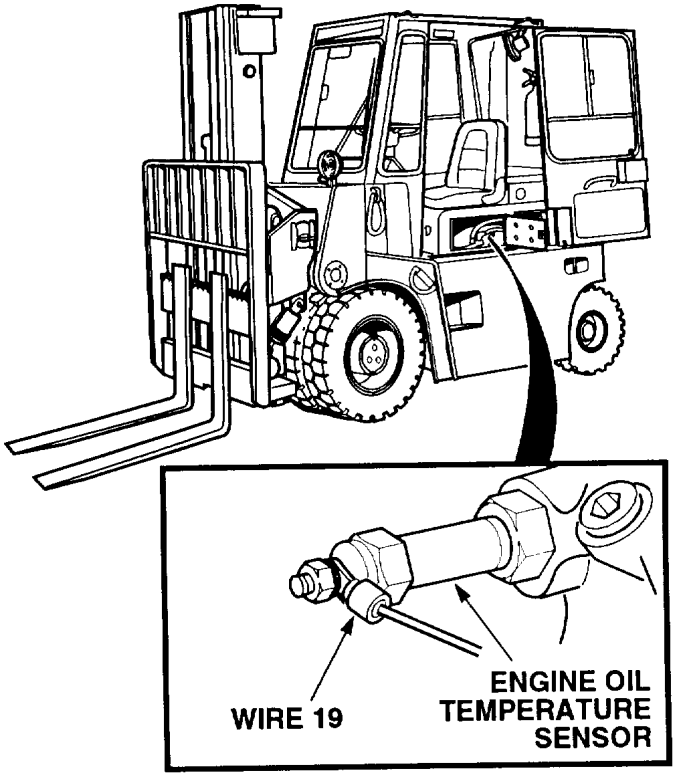

www.truck-freeworkshop.com

6. ENGINE OVERHEATS (ENGINE OIL TEMPERATURE OVER 250°F [121°C]) (CONT).

2.

Does engine oil temperature gauge give a full scale deflection when wire 19 is grounded?

KNOWN INFO	TEST OPTIONS
Engine oil level OK. Engine oil temperature is over 250° Engine oil temperature sensor OK.	Gauge operation test.
POSSIBLE PROBLEMS	**REASON FOR QUESTION**
Engine oil temperature gauge faulty. Gauge wire 5 faulty. Gauge ground wire faulty. Wire 19 faulty. Cylinder head fins and air outlet frame dirty. Oil cooler fins dirty. Oil cooler faulty.	If engine oil temperature gauge does not read at full scale, gauge is faulty.

NO → Go to Step 3 of this Fault.

YES ↓

3.

WARNING
Read WARNING on Page 2-85

Are 22 to 24 vdc measured at engine oil temperature gauge, terminal I?

KNOWN INFO	TEST OPTIONS
Engine oil level OK. Engine oil temperature is over 250°. Engine oil temperature sensor OK. Engine oil temperature gauge OK.	Voltage test. STE/ICE-R #89.
POSSIBLE PROBLEMS	**REASON FOR QUESTION**
Gauge wire 5 faulty. Gauge ground wire faulty. Wire 19 faulty. Cylinder head fins and air outlet frame dirty. Oil cooler fins dirty. Oil cooler faulty.	If 22 to 24 vdc are not present, gauge wire 5 is faulty.

NO → Repair gauge wire 5 (see schematic Appendix F). Go to Step 8 of this Fault.

YES ↓

www.truck-freeworkshop.com

WARNING

Remove all jewelry such as rings, dog tags, bracelets, etc. If jewelry contacts battery terminal, a direct short may result in instant heating of tools, damage to equipment, and injury or death to personnel.

GAUGE OPERATION TEST

(1) Set MAIN POWER switch to ON position (TM 10-3930-669-10).

(2) Set engine switch to ignition position (TM 10-3930-669-10).

(3) Observe gauge needle for reading.

(a) If gauge does not have a full scale deflection, perform Steps (4) through (6) below.

(b) If gauge has a full scale deflection, perform Steps (5) and (6) below and go to Step 3 of this Fault.

(4) Install sensor wire 19 (Para 7-41).

(5) Set engine switch to off position.

(6) Set MAIN POWER switch to OFF position.

VOLTAGE TEST

(1) Remove instrument panel (Para 7-8).

(2) Set multimeter select switch to VOLTS DC.

(3) Connect positive (+) multimeter lead to engine oil temperature gauge, terminal I.

(4) Connect negative (-) multimeter lead to a known good ground.

(5) Set MAIN POWER switch to ON position (TM 10-3930-669-10).

(6) Set engine switch to ignition position (TM 10-3930-669-10).

(a) If there are not 22 to 24 vdc present, perform Steps (7) and (8) below and repair gauge wire 5 (see schematic Appendix F).

(b) If there are 22 to 24 vdc present, gauge wire 5 is OK.

(7) Set engine switch to off position.

(8) Set MAIN POWER switch to OFF position.

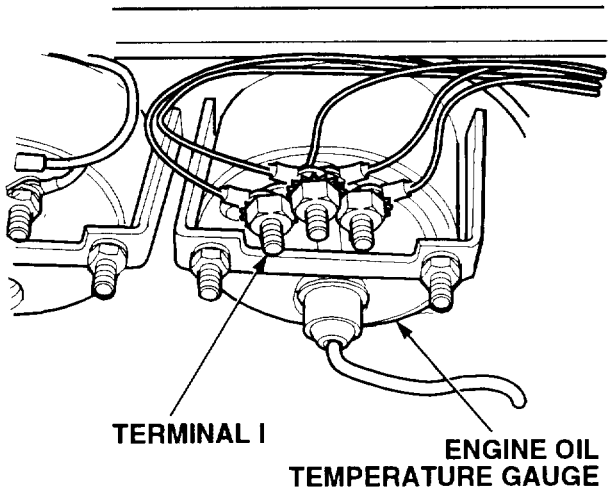

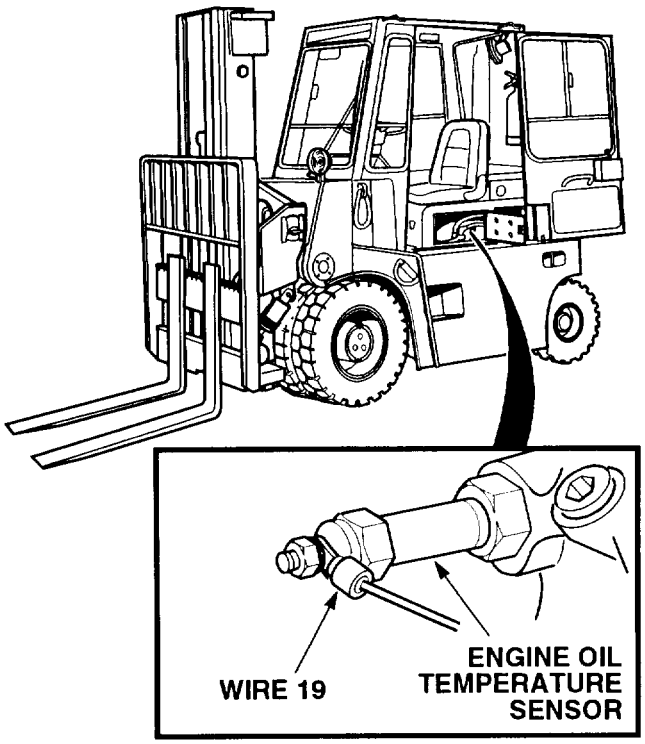

www.truck-freeworkshop.com

6. ENGINE OVERHEATS (ENGINE OIL TEMPERATURE OVER 250°F [121°C]) (CONT).

KNOWN INFO
Engine oil level OK. Engine oil temperature is over 250°. Engine oil temperature sensor OK. Engine oil temperature gauge OK. Gauge wire 5 OK.
POSSIBLE PROBLEMS
Gauge ground wire faulty. Wire 19 faulty. Cylinder head fins and air outlet frame dirty. Oil cooler fins dirty. Oil cooler faulty.

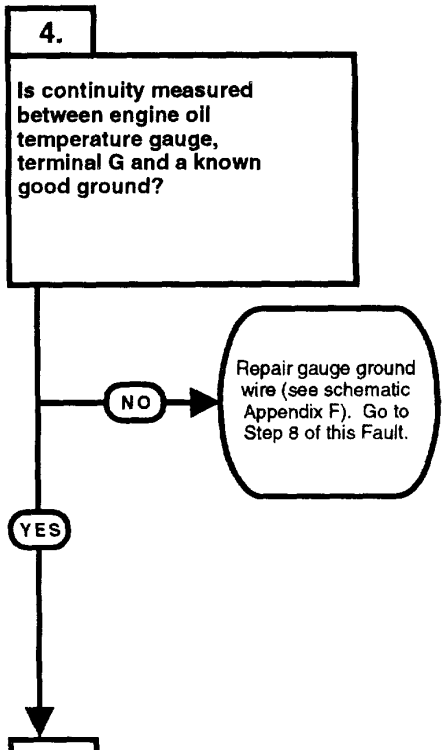

TEST OPTIONS
Continuity test. STE/ICE-R #91.
REASON FOR QUESTION
If continuity is not present, gauge ground wire is faulty.

KNOWN INFO
Engine oil level OK. Engine oil temperature is over 250°. Engine oil temperature sensor OK. Engine oil temperature gauge OK. Gauge wire 5 OK. Gauge ground wire OK.
POSSIBLE PROBLEMS
Wire 19 faulty. Cylinder head fins and air outlet frame dirty. Oil cooler fins dirty. Oil cooler faulty.

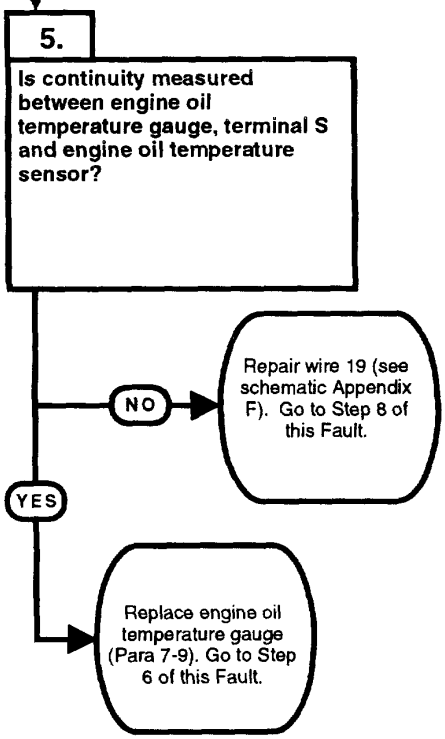

TEST OPTIONS
Continuity test. STE/ICE-R #91.
REASON FOR QUESTION
If continuity is not present, sensor wire 19 is faulty.

www.truck-freeworkshop.com

CONTINUITY TEST
(1) Set multimeter select switch to OHMS.
(2) Check continuity between suspect gauge, terminal G and a known good ground.
(a) If there is no continuity, repair or replace gauge ground wire (see schematic Appendix F).
(b) If there is continuity, ground wire is OK.

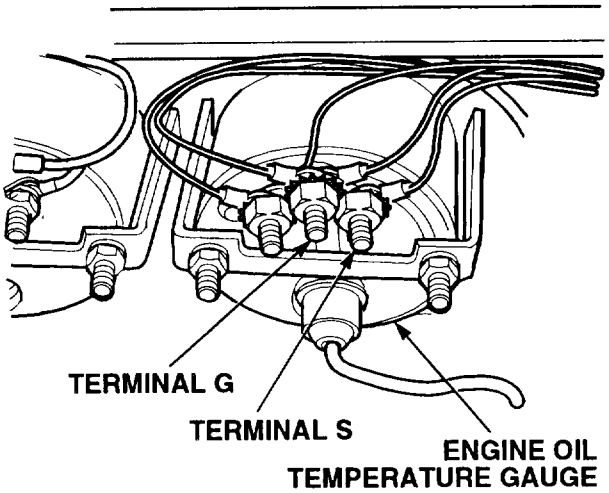

CONTINUITY TEST
(1) Set multimeter select switch to OHMS.
(2) Check continuity between engine oil temperature gauge, terminal S and a known good ground.
(a) If there is no continuity, repair wire 19 (See Schematic Appendix F).
(b) If there is continuity, sensor wire 19 is OK, replace engine oil temperature gauge (Para 7-9) and go to Step 6 of this Fault.
(3) Install sensor wire 19.
(4) Install instrument panel (Para 7-8).

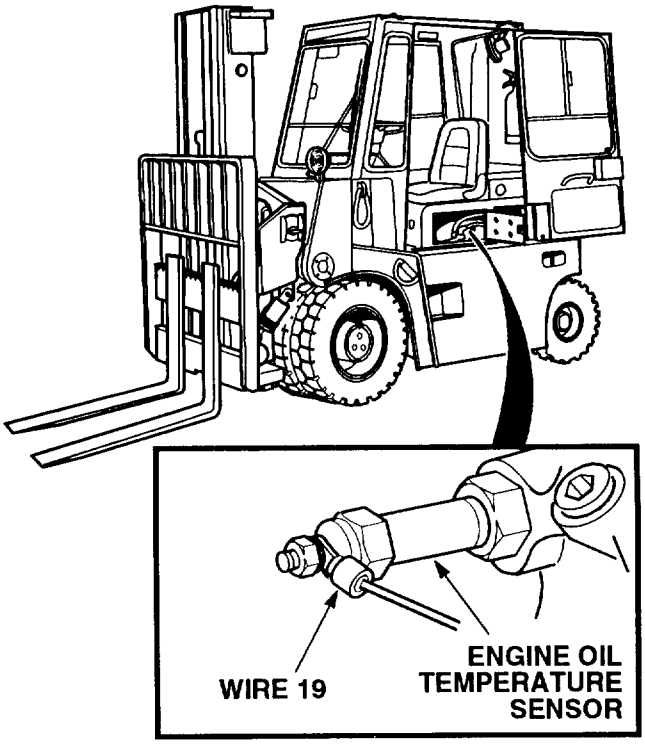

www.truck-freeworkshop.com

6. ENGINE OVERHEATS (ENGINE OIL TEMPERATURE OVER 250°F [121 °C]) (CONT).

KNOWN INFO
Engine oil level OK. Engine oil temperature is over 250°. Engine oil temperature sensor OK. Engine oil temperature gauge OK. Gauge wire 5 OK. Gauge ground wire OK. Wire 19 faulty.
POSSIBLE PROBLEMS
Cylinder head fins and air outlet frame dirty. Oil cooler fins dirty. Oil cooler faulty.

TEST OPTIONS
Visual inspection.
REASON FOR QUESTION
If cylinder head fins and/or air outlet frame are dirty, engine will overheat.

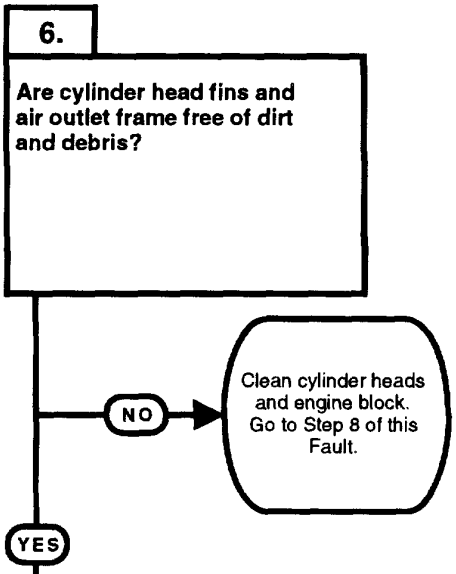

KNOWN INFO
Engine oil level OK. Engine oil temperature is over 250°. Engine oil temperature sensor OK. Engine oil temperature gauge OK. Gauge wire 5 OK. Gauge ground wire OK. Wire 19 faulty. Cylinder head fins and air outlet frame OK.
POSSIBLE PROBLEMS
Oil cooler fins dirty. Oil cooler faulty.

TEST OPTIONS
Visual inspection.
REASON FOR QUESTION
If oil cooler fins are dirty, engine will overheat. If oil cooler fins are clean, oil cooler thermostat is faulty.

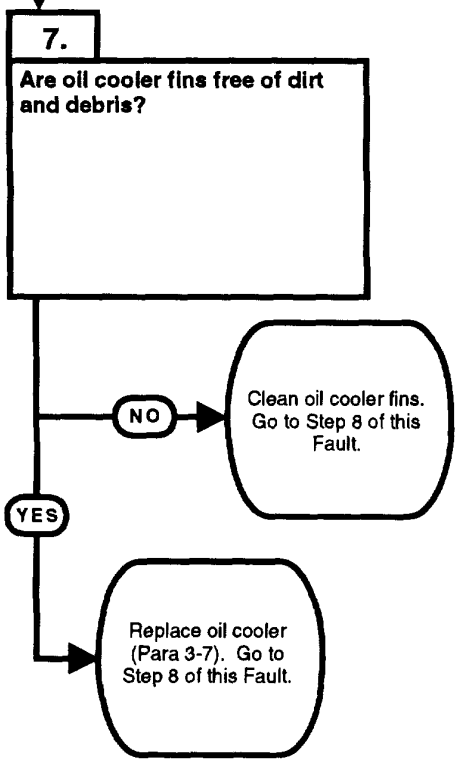

www.truck-freeworkshop.com

VISUAL INSPECTION
(1) Remove cab and engine cowling (Para 15-2).
(2) Inspect cylinder head fins and outlet frame for dirt and debris.
(a) If cylinder head fins and/or outlet frame are dirty, clean cylinder heads and/or air outlet frame.
(b) If cylinder head fins and/or air outlet frame are not dirty, go to Step 7 of this Fault.
(3) Install engine cowling and cab.

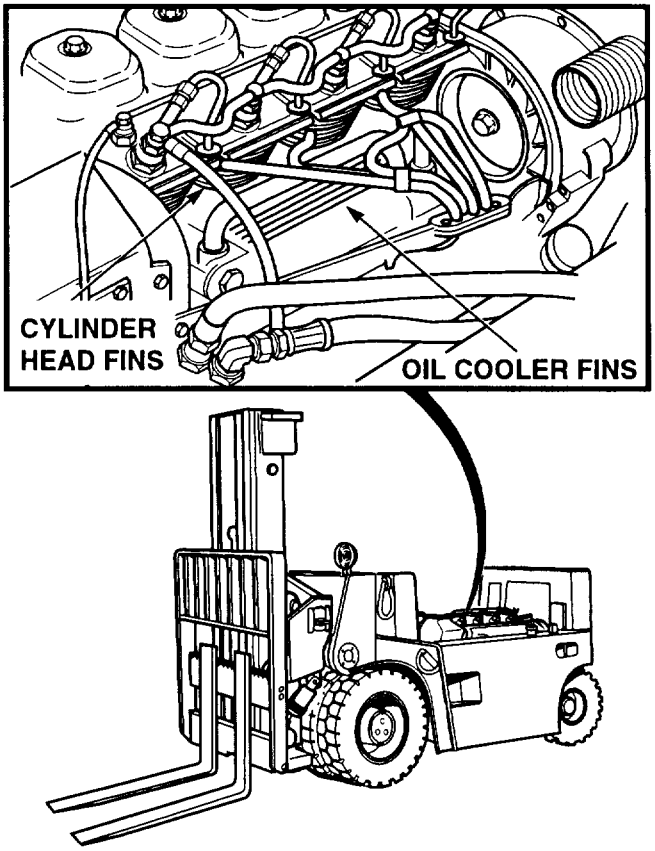

VISUAL INSPECTION
(1) Inspect oil cooler fins for dirt and debris.
(a) If oil cooler fins are dirty, clean oil cooler.
(b) If oil cooler fins are not dirty, replace oil cooler (Para 3-7).
(2) Install engine cowling and cab (Para 15-2).

www.truck-freeworkshop.com

6. ENGINE OVERHEATS (ENGINE OIL TEMPERATURE OVER 250°F [121°C]) (CONT).

KNOWN INFO
Engine oil level OK. Engine oil temperature is over 250°. Engine oil temperature sensor OK. Engine oil temperature gauge OK. Gauge wire 5 OK. Gauge ground wire OK. Wire 19 faulty. Cylinder head fins and air outlet frame OK. Oil cooler fins OK. Oil cooler OK.
POSSIBLE PROBLEMS

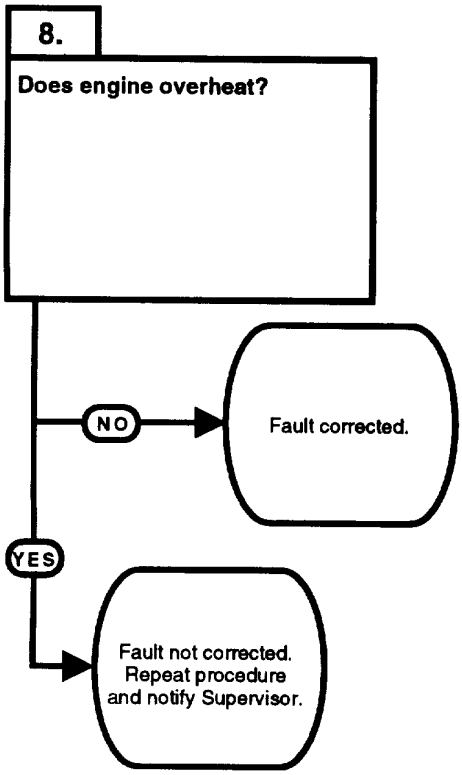

TEST OPTIONS
Verify repair.
REASON FOR QUESTION
If engine does not overheat, fault has been corrected.

www.truck-freeworkshop.com

VERIFY REPAIR
(1) Start engine (TM 10-3930-669-10).
(2) Operate forklift and observe engine temperature gauge.
(a) If engine oil temperature does not go over 250°F (121°C), fault corrected. Perform Step (3) below.
(b) If engine oil temperature goes over 250°F (121°C), fault not corrected. Perform Step (3) below. Repeat procedure and notify Supervisor.
(3) Shut down engine.

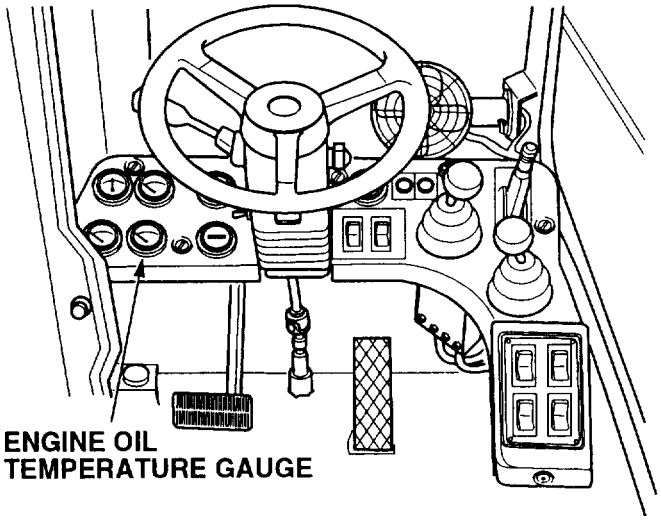

www.truck-freeworkshop.com

2-13. ENGINE SYSTEM TROUBLESHOOTING (CONT).

7. ENGINE RUNS ROUGH OR MISFIRES.

INITIAL SETUP

Tools and Special Tools
Tool Kit, General Mechanic's: Automotive (Item 1, Appendix B)
Pan, Drain (Item 11, Appendix B)

Equipment Condition
Engine OFF (TM 10-3930-669-10)
MAIN POWER switch OFF (TM 10-3930-669-10)
Parking brake applied (TM 10-3930-669-10)
Wheels chocked (TM 10-3930-669-10)

References
TM 10-3930-669-10

KNOWN INFO
Nothing.
POSSIBLE PROBLEMS
Contaminated fuel. Fuel lines loose or damaged. Intake/exhaust valve adjustment incorrect. Air in fuel lines. Fuel injector(s) faulty.

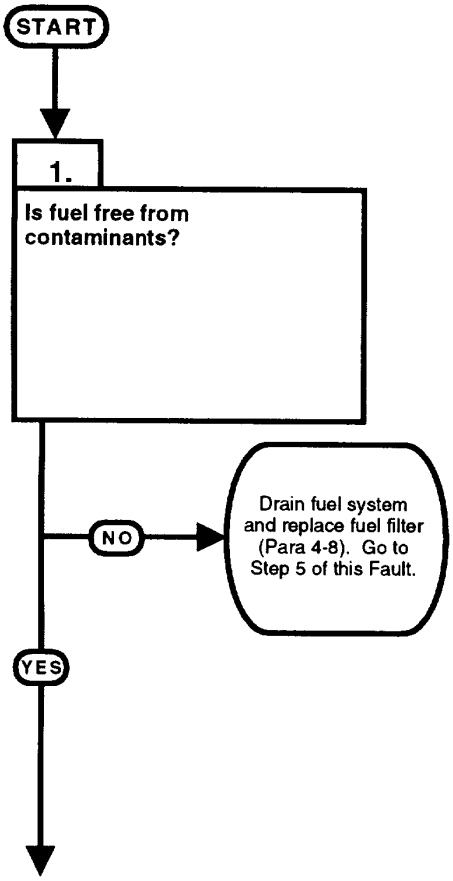

TEST OPTIONS
Visual inspection.
REASON FOR QUESTION
If fuel is contaminated, engine will run rough.

www.truck-freeworkshop.com

VISUAL INSPECTION
(1) Open right-hand engine access cover (TM 10-3930-669-10).
(2) Drain fuel/water separator and check fuel for contamination.
(a) If contaminated, drain contaminated fuel from tank (LO 10-3930-669-12) and replace secondary fuel filter (Para 4-8). Refill fuel tank with clean fuel.
(b) If fuel is not contaminated, fuel is OK.
(3) Close right-hand engine access cover.

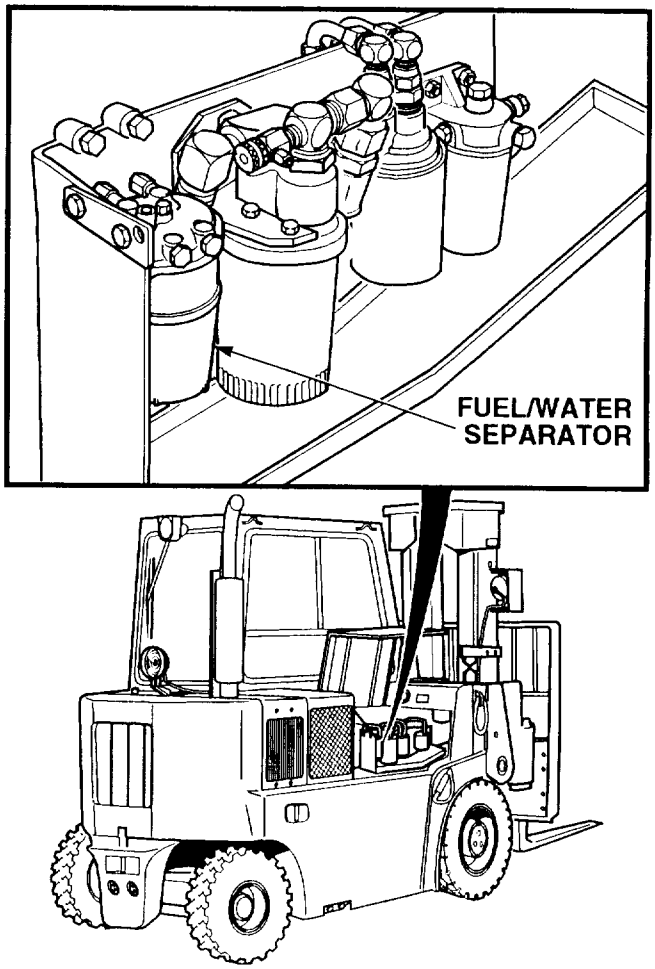

www.truck-freeworkshop.com

7. ENGINE RUNS ROUGH OR MISFIRES (CONT).

KNOWN INFO
Fuel OK.
POSSIBLE PROBLEMS
Fuel lines loose or damaged. Intake/exhaust valve adjustment incorrect. Air in fuel lines. Fuel injector(s) faulty.

TEST OPTIONS
Visual inspection.
REASON FOR QUESTION
If fuel lines are damaged or leaking, engine will run rough.

2.

Are fuel lines and fittings tightened and free from damage?

NO → Tighten fittings or replace fuel lines (Para 4-5). Go to Step 5 of this Fault.

YES ↓

KNOWN INFO
Fuel OK. Fuel lines OK.
POSSIBLE PROBLEMS
Intake/exhaust valve adjustment incorrect. Air in fuel lines. Fuel injector(s) faulty.

TEST OPTIONS
Audible inspection.
REASON FOR QUESTION
If air is trapped in fuel system, engine will run rough.

3.

Are fuel lines free of trapped air?

NO → Bleed fuel system. Go to Step 5 of this Fault.

YES ↓

www.truck-freeworkshop.com

VISUAL INSPECTION
(1) Position cab for service (Para 15-2).
(2) Inspect fuel lines and fittings for leakage and damage.
(a) If fittings are leaking, tighten or replace fuel lines (Para 4-5).
(b) If fuel lines are damaged, replace fuel lines.
(c) If fuel lines and fittings are not leaking or damaged, fuel lines and fittings are OK.

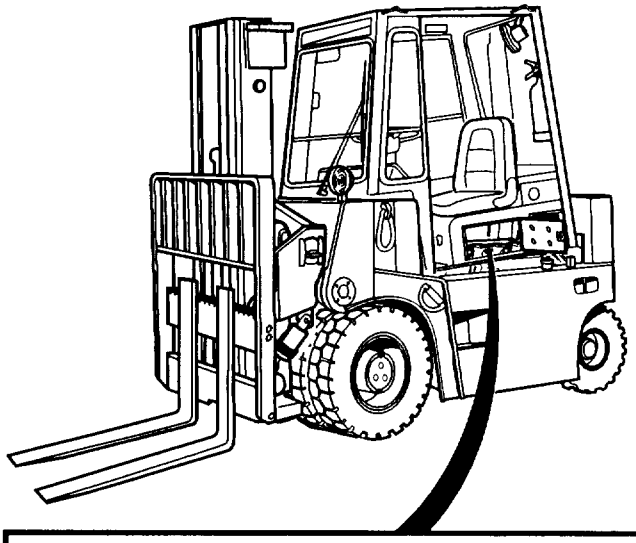

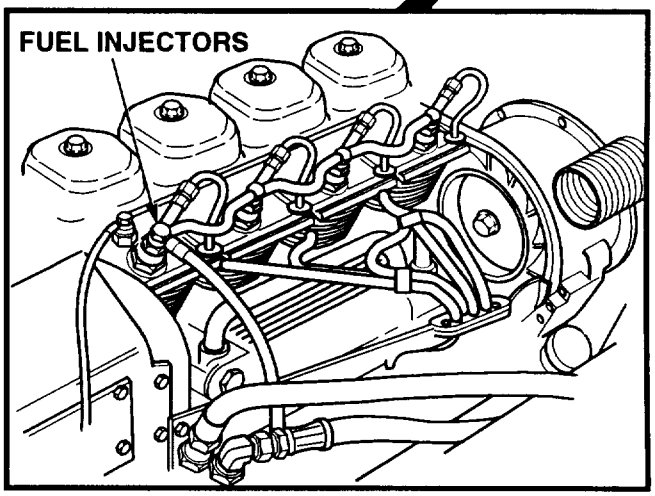

AUDIBLE INSPECTION
(1) Bleed fuel system.
(2) Start engine (TM 10-3930-669-10).
(3) Listen to engine operation.
(a) If engine does not run rough, fuel lines were aerated. Perform Step (4) below and go to Step 5 of this Fault.
(b) If engine runs rough, perform Step (4) below and go to Step 5 of this Fault.
(4) Shut down engine.

www.truck-freeworkshop.com

7. ENGINE RUNS ROUGH OR MISFIRES (CONT).

KNOWN INFO
Fuel OK. Fuel lines OK. Intake/exhaust valve adjustment correct.
POSSIBLE PROBLEMS
Air in fuel lines. Fuel injector(s) faulty.

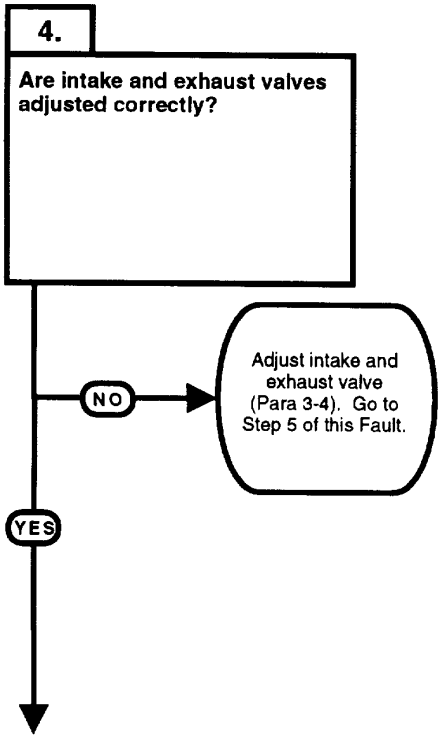

TEST OPTIONS
Visual inspection.
REASON FOR QUESTION
If valves are not adjusted correctly, engine will run rough.

www.truck-freeworkshop.com

VISUAL INSPECTION
(1) Remove valve covers (Para 3-2).
(2) Check valve clearance (Para 3-4).
(a) If intake and/or exhaust valve clearance is not correct, adjust valves.
(b) If intake and exhaust valve clearance is correct, valve adjustments OK.
(3) Install valve covers.
(4) Install cab (Para 15-2).

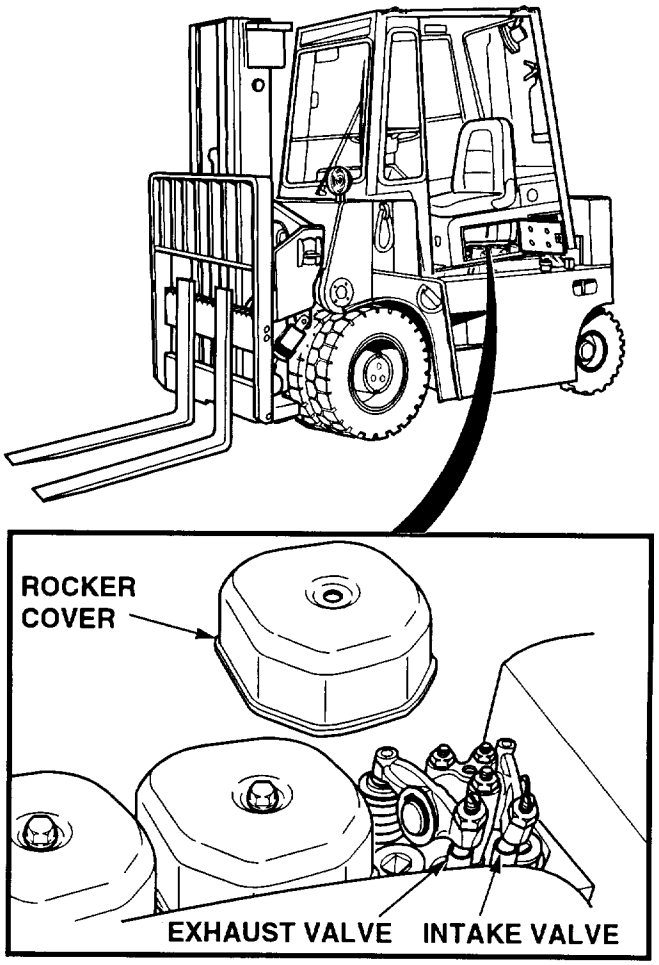

www.truck-freeworkshop.com

7. ENGINE RUNS ROUGH OR MISFIRES (CONT).

KNOWN INFO
Fuel OK. Fuel lines OK. Intake/exhaust valve adjustment correct. Non-aerated fuel lines. Fuel injectors OK.
POSSIBLE PROBLEMS

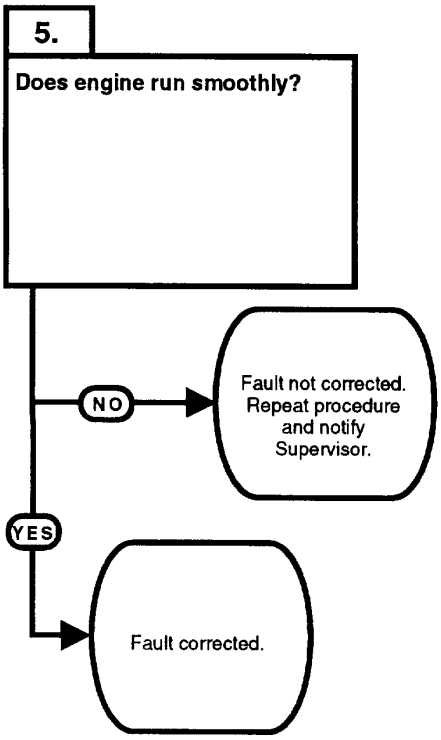

TEST OPTIONS
Verify repair.
REASON FOR QUESTION
If engine does not run rough, fault has been corrected.

www.truck-freeworkshop.com

VERIFY REPAIR
(1) Start engine (TM 10-3930-669-10).
(2) Listen to engine operation.
(a) If engine does not run smoothly, fault not corrected. Perform Step (3) below. Repeat procedure and notify Supervisor.
(b) If engine runs smoothly, fault corrected.
(3) Shut down engine.

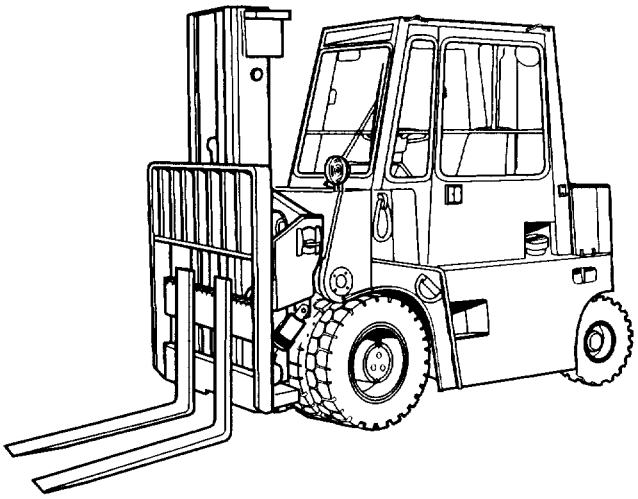

www.truck-freeworkshop.com

2-13. ENGINE SYSTEM TROUBLESHOOTING (CONT).

8. ENGINE DOES NOT DEVELOP FULL POWER.

INITIAL SETUP

Tools and Special Tools
Tool Kit, General Mechanic's: Automotive (Item 1, Appendix B)

Equipment Condition
Engine OFF (TM 10-3930-669-10)
MAIN POWER switch OFF (TM 10-3930-669-10)
Parking brake applied (TM 10-3930-669-10)
Wheels chocked (TM 10-3930-669-10)

References
TM 10-3930-669-10

KNOWN INFO
Engine operates.
POSSIBLE PROBLEMS
Fuel contaminated. Throttle adjustment incorrect. Intake/exhaust valve adjustment incorrect. Fuel lines loose or damaged. Fuel injector(s) faulty.

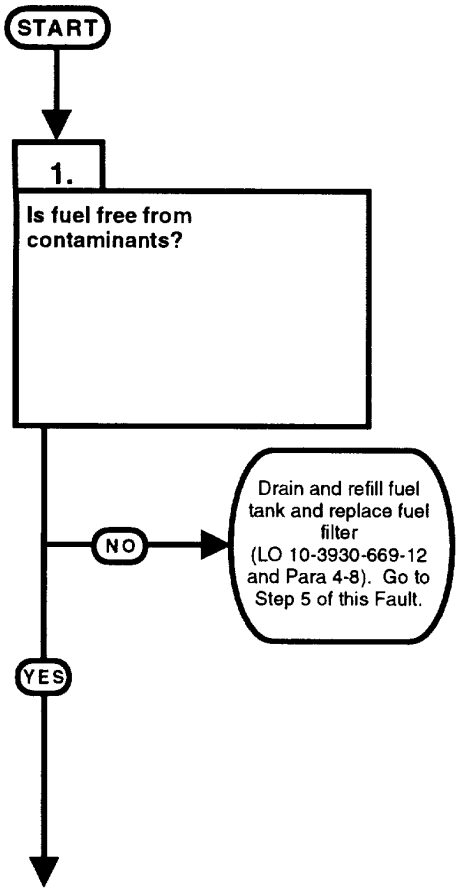

TEST OPTIONS
Visual inspection.
REASON FOR QUESTION
If fuel is contaminated, engine will not develop full power.

www.truck-freeworkshop.com

VISUAL INSPECTION
(1) Open right-hand engine access cover (TM 10-3930-669-10).
(2) Drain fuel/water separator and check fuel for contamination.
(a) If contaminated, drain contaminated fuel from tank (LO 10-3930669-12) and replace secondary fuel filter (Para 4-8). Refill fuel tank with clean fuel.
(b) If fuel is not contaminated, fuel is OK.
(3) Close right-hand engine access cover.

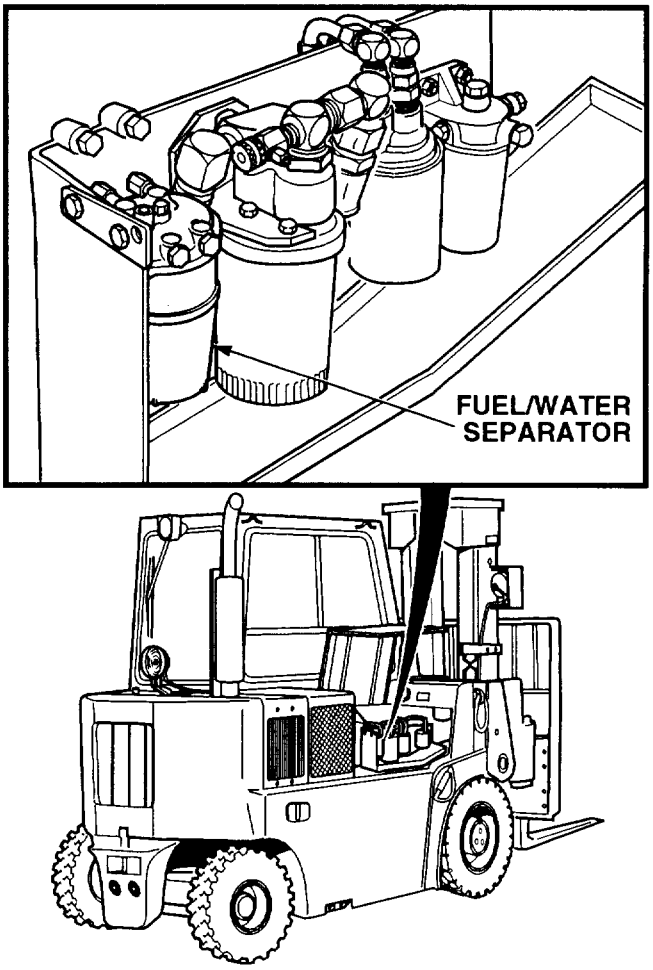

www.truck-freeworkshop.com

8. ENGINE DOES NOT DEVELOP FULL POWER (CONT).

KNOWN INFO
Engine operates. Fuel OK.
POSSIBLE PROBLEMS
Throttle adjustment incorrect. Intake/exhaust valve adjustment incorrect. Fuel lines loose or damaged. Fuel injector(s) faulty.

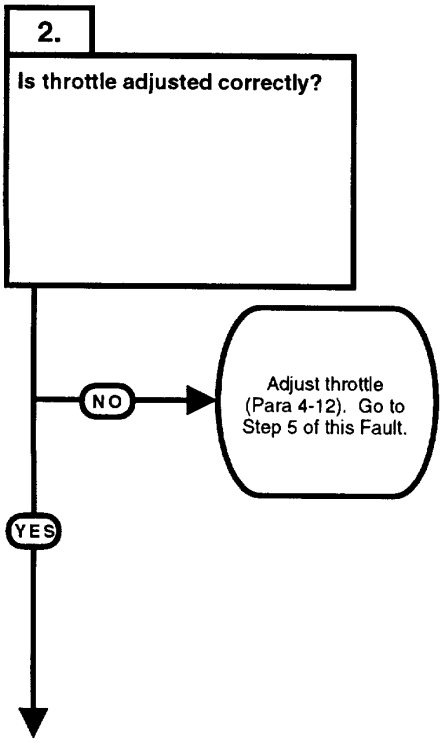

TEST OPTIONS
Visual inspection.
REASON FOR QUESTION
If throttle is not adjusted correctly, throttle speed will be too low to obtain full power.

www.truck-freeworkshop.com

VISUAL INSPECTION
(1) Remove floor plate (Para 15-12).
(2) Inspect throttle adjustment (Para 4-12).
(a) If throttle adjustment is incorrect, adjust throttle linkage (Para 4-12).
(b) Throttle adjustment is correct, throttle linkage is OK.
(3) Install floor plate.

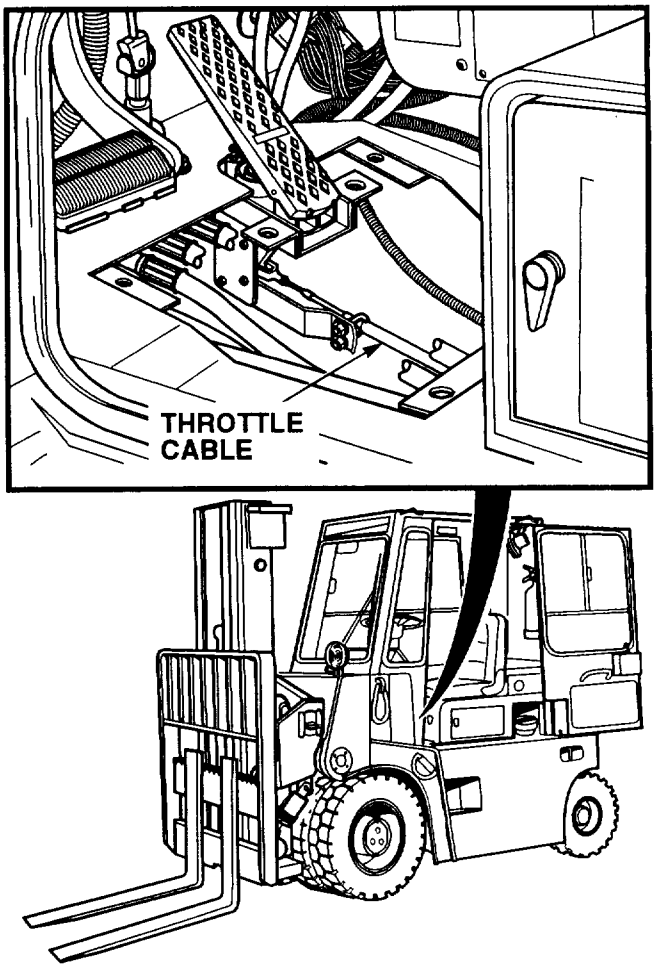

www.truck-freeworkshop.com

8. ENGINE DOES NOT DEVELOP FULL POWER (CONT).

KNOWN INFO
Engine operates. Fuel OK. Throttle adjustment correct. Intake/exhaust valve adjustment correct.
POSSIBLE PROBLEMS
Fuel lines loose or damaged. Fuel injector(s) faulty.

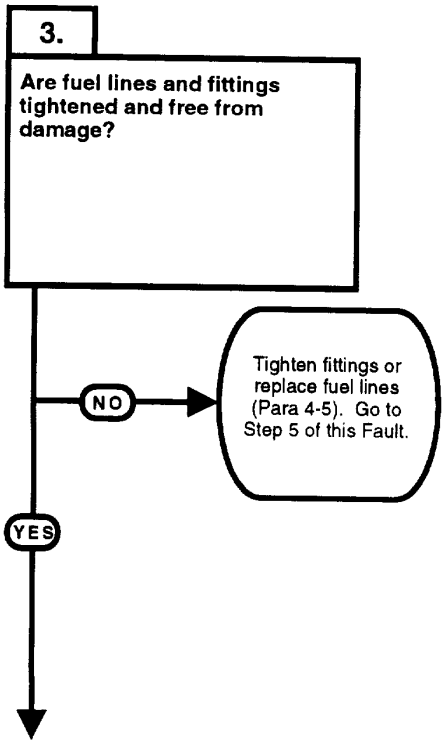

TEST OPTIONS
Visual inspection.
REASON FOR QUESTION
If fuel lines are damaged or leaking, engine will not develop full power.

www.truck-freeworkshop.com

VISUAL INSPECTION
(1) Position cab for service (Para 15-2).
(2) Inspect fuel lines and fittings for leakage and damage.
(a) If fittings are leaking, tighten or replace fuel lines (Para 4-5).
(b) If fuel lines are damaged, replace fuel lines.
(c) If fuel lines and fittings are not leaking or damaged, fuel lines and fittings are OK.

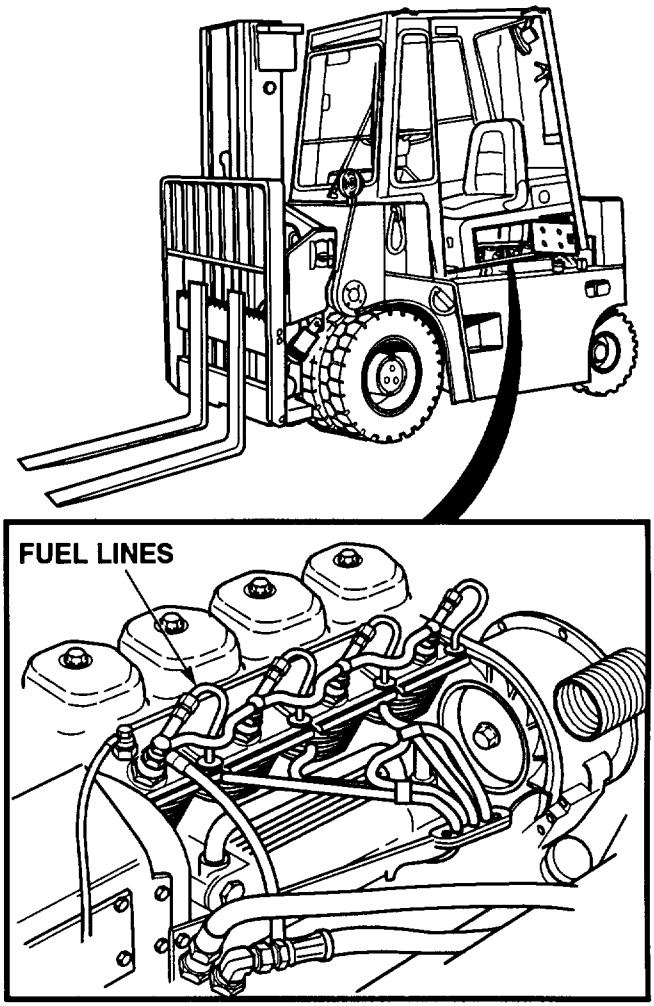

www.truck-freeworkshop.com

8. ENGINE DOES NOT DEVELOP FULL POWER (CONT).

KNOWN INFO
Engine operates. Fuel OK. Throttle adjustment correct.
POSSIBLE PROBLEMS
Intake/exhaust valve adjustment incorrect. Fuel lines loose or damaged. Fuel injector(s) faulty.

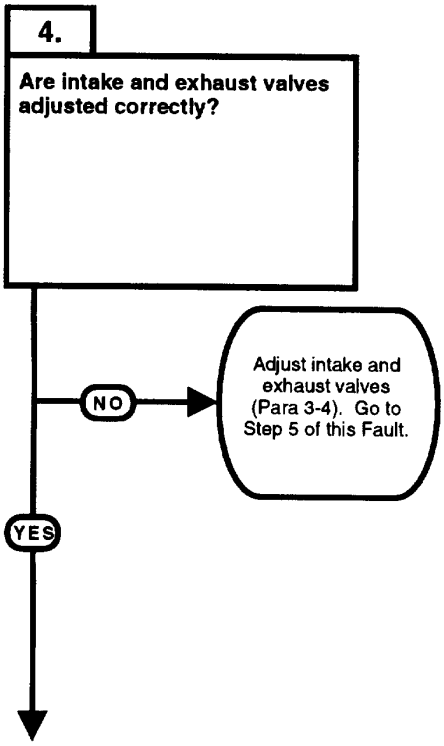

TEST OPTIONS
Visual inspection.
REASON FOR QUESTION
If valves are not adjusted correctly, engine will not develop full power.

www.truck-freeworkshop.com

VISUAL INSPECTION
(1) Remove valve covers (Para 3-2).
(2) Check valve clearance (Para 3-4).
(a) If intake and/or exhaust valve clearance is not correct, adjust valves.
(b) If intake and exhaust valve clearance is correct, valve adjustments OK.
(3) Install valve covers.
(4) Install cab (Para 15-2).

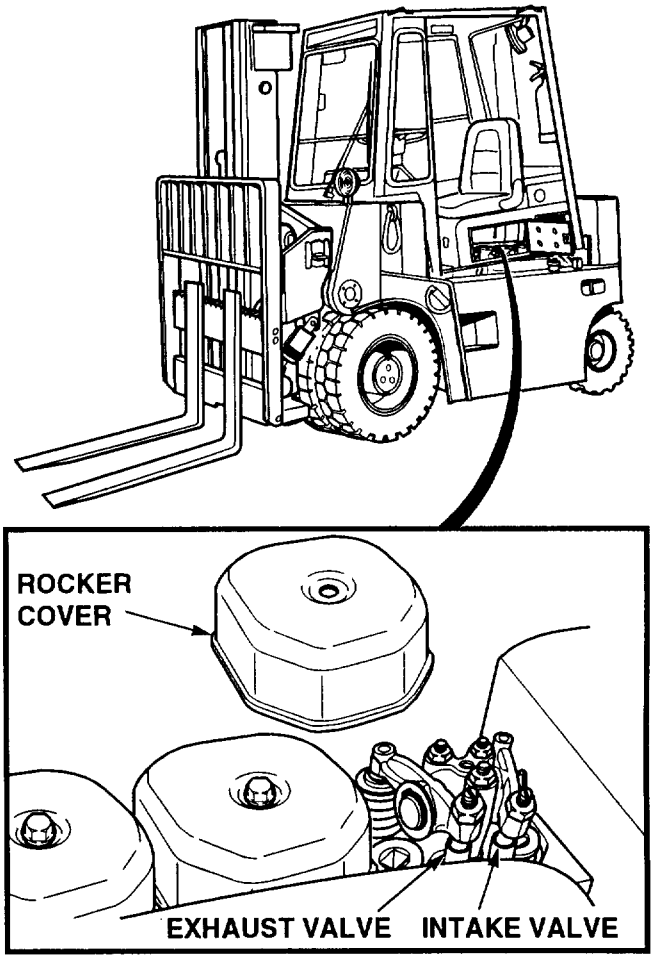

www.truck-freeworkshop.com

8. ENGINE DOES NOT DEVELOP FULL POWER (CONT).

KNOWN INFO
Engine operates. Fuel OK. Throttle adjustment correct. Intake/exhaust valve adjustment correct. Fuel lines OK. Fuel injectors OK.
POSSIBLE PROBLEMS

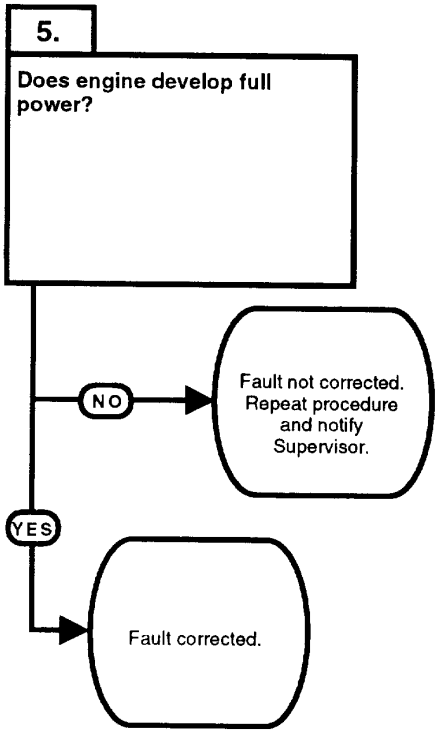

TEST OPTIONS
Verify repair.
REASON FOR QUESTION
If engine develops full power, fault has been corrected.

www.truck-freeworkshop.com

VERIFY REPAIR
(1) Start engine (TM 10-3930-669-10).
(2) Operate forklift with a standard load and observe operation.
(a) If engine does not develop full power, fault not corrected. Perform Step (3) below. Repeat procedure and notify Supervisor.
(b) If engine develops full power, fault corrected.
(3) Shut down engine.

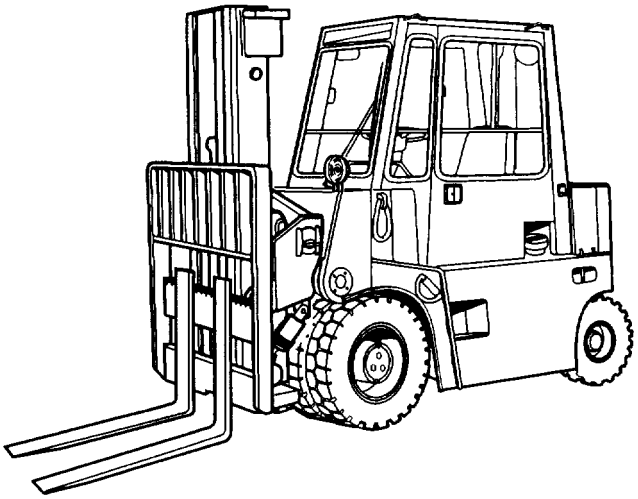

www.truck-freeworkshop.com

2-13. ENGINE SYSTEM TROUBLESHOOTING (CONT).

9. ENGINE VIBRATES EXCESSIVELY.

INITIAL SETUP

Tools and Special Tools
Tool Kit, General Mechanic's: Automotive (Item 1, Appendix B)

Equipment Condition
Engine OFF (TM 10-3930-669-10)
MAIN POWER switch OFF (TM 10-3930-669-10)
Parking brake applied (TM 10-3930-669-10)
Wheels chocked (TM 10-3930-669-10)

References
TM 10-3930-669-10

KNOWN INFO
Nothing.
POSSIBLE PROBLEMS
Engine mounts faulty. Engine supports faulty.

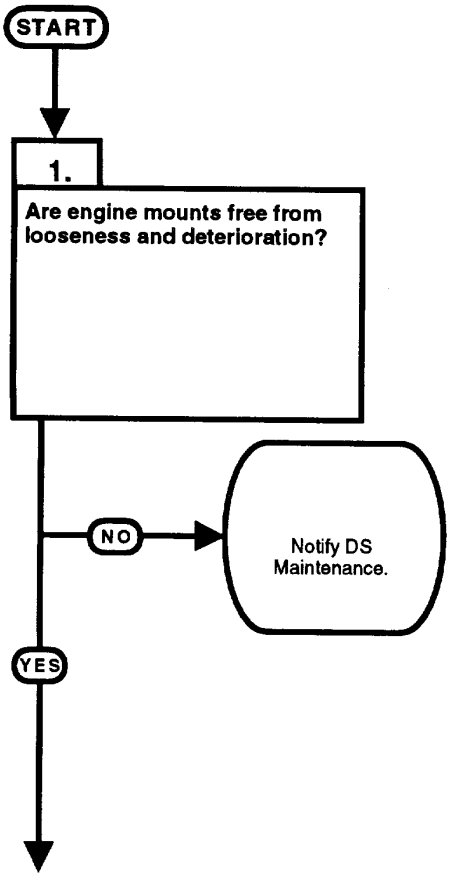

TEST OPTIONS
Visual inspection.
REASON FOR QUESTION
If engine mounts are faulty, engine will vibrate excessively.

www.truck-freeworkshop.com

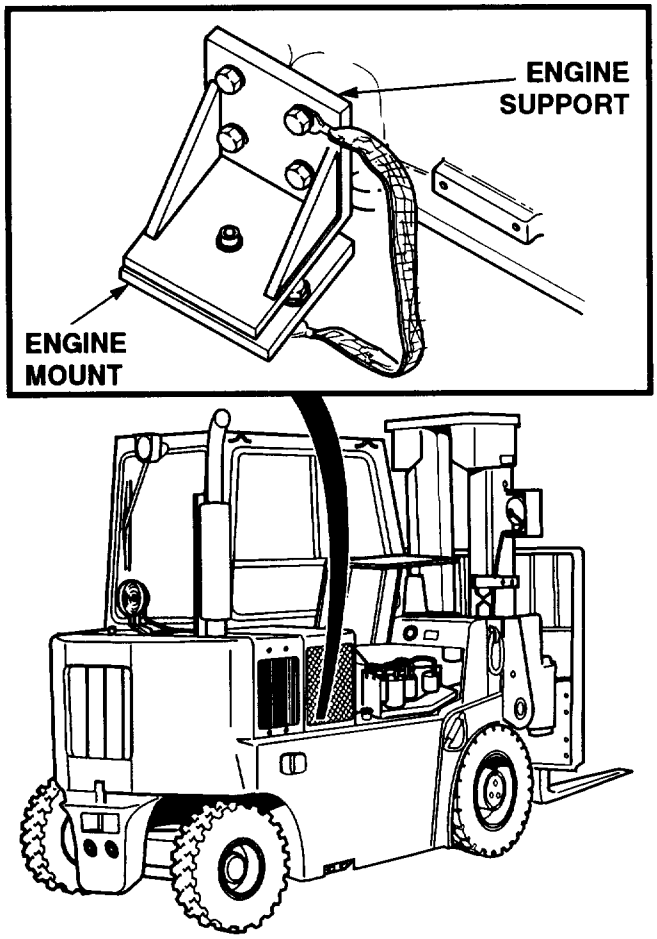

VISUAL INSPECTION
Inspect engine mounts for loose hardware and deterioration. (a) If mounts are loose or damaged, notify DS Maintenance. (b) If mounts are not loose or damaged, engine mounts OK.

www.truck-freeworkshop.com

9. ENGINE VIBRATES EXCESSIVELY (CONT).

KNOWN INFO
Engine mounts OK.
POSSIBLE PROBLEMS
Engine supports faulty.

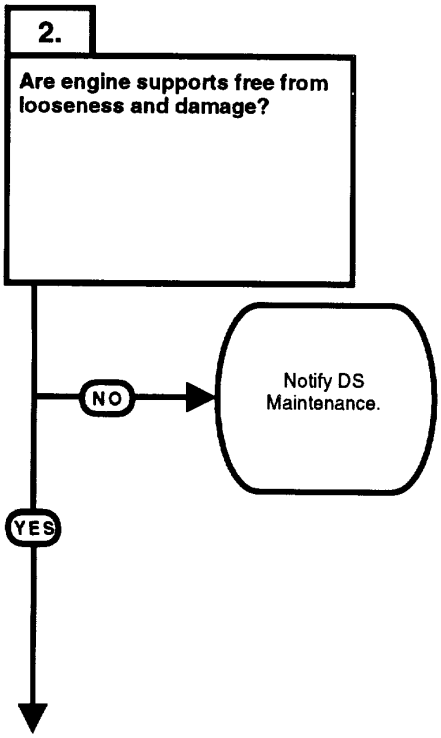

TEST OPTIONS
Visual inspection.
REASON FOR QUESTION
If front engine support is faulty, engine will vibrate excessively.

www.truck-freeworkshop.com

VISUAL INSPECTION
Inspect engine supports for loose hardware and visible damage. (a) If engine supports are loose or damaged, notify DS Maintenance. (b) If engine supports are not loose or damaged, front engine support is OK.

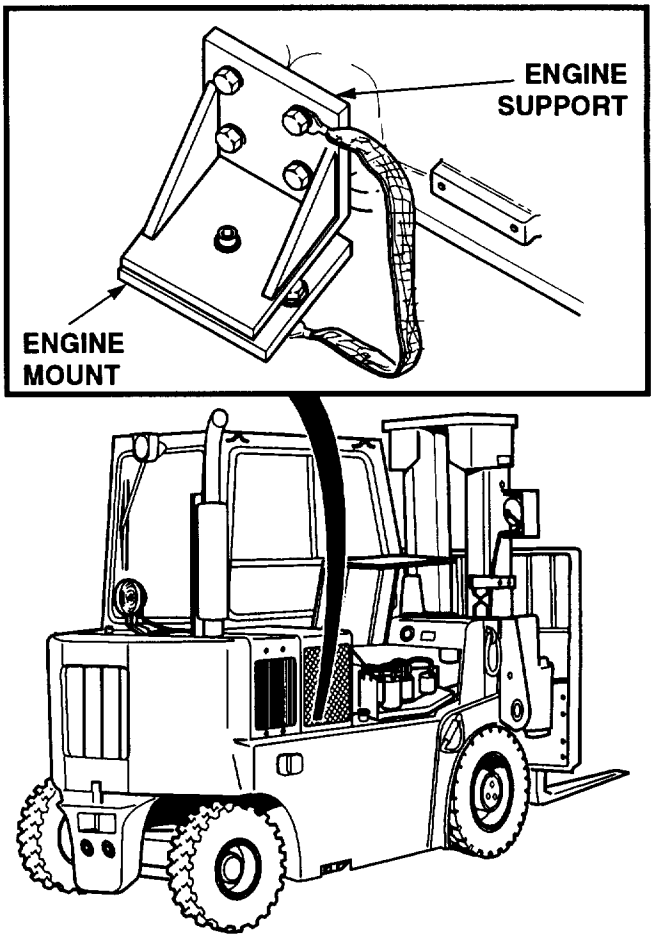

www.truck-freeworkshop.com

9. ENGINE VIBRATES EXCESSIVELY (CONT).

KNOWN INFO
Engine mounts OK. Engine supports OK.
POSSIBLE PROBLEMS

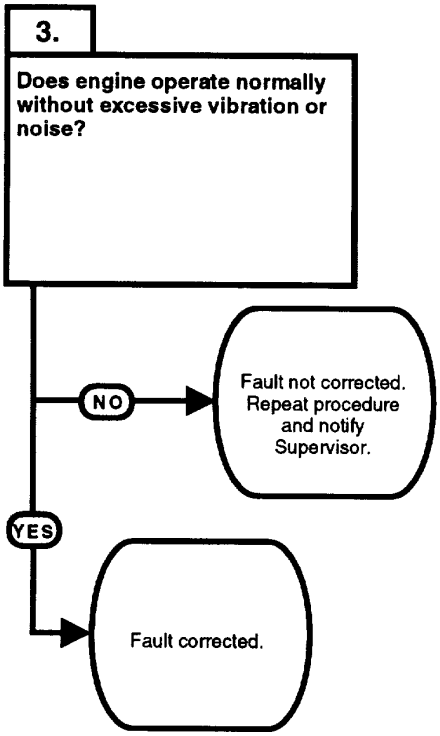

TEST OPTIONS
Verify repair.
REASON FOR QUESTION
If engine is not excessively vibrating or noisy, fault has been corrected.

www.truck-freeworkshop.com

VERIFY REPAIR
(1) Start engine (TM 10-3930-669-10).
(2) Listen and observe for excessive noise or vibration.
(a) If engine is excessively noisy or vibrating, fault not corrected. Perform Step (3) below. Repeat procedure and notify Supervisor.
(b) If engine is not excessively noisy or vibrating, fault corrected.
(3) Shut down engine.

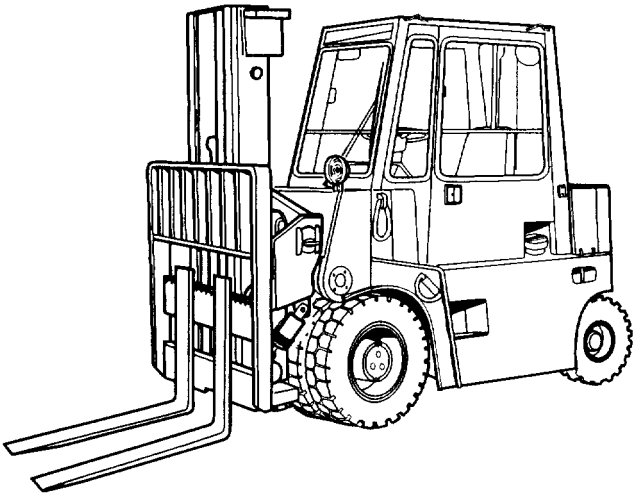

www.truck-freeworkshop.com

2-13. ENGINE SYSTEM TROUBLESHOOTING (CONT).

10. HEATER DOES NOT BLOW WARM OR HOT AIR.

INITIAL SETUP

Tools and Special Tools
Tool Kit, General Mechanic's: Automotive (Item 1, Appendix B)

Equipment Condition
Engine OFF (TM 10-3930-669-10)
Engine oil level full (TM 10-3920-669-10)
MAIN POWER switch OFF (TM 10-3930-669-10)
Parking brake applied (TM 10-3930-669-10)
Wheels chocked (TM 10-3930-669-10)

References
TM 10-3930-669-10

KNOWN INFO
Cool air passes from heater duct.
POSSIBLE PROBLEMS
Heater temperature control faulty. Heater cable faulty. Heater valve faulty. Engine oil cooler thermostat faulty.

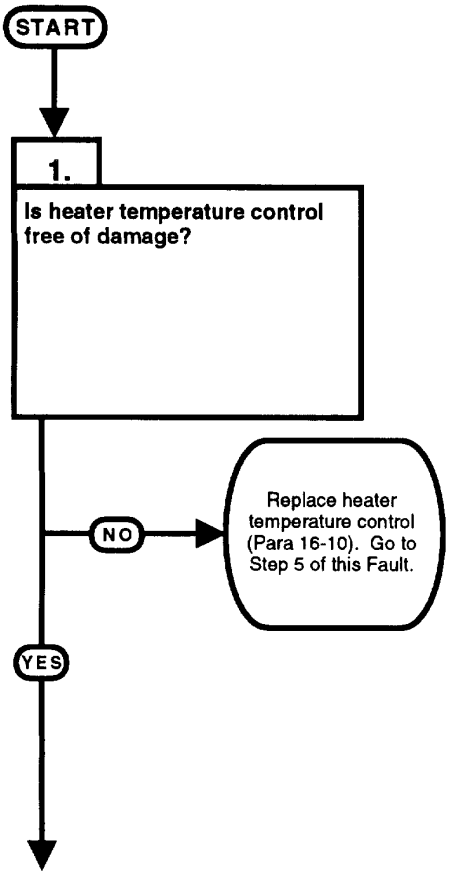

TEST OPTIONS
Visual inspection.
REASON FOR QUESTION
If temperature control is faulty, air temperature will not adjust.

www.truck-freeworkshop.com

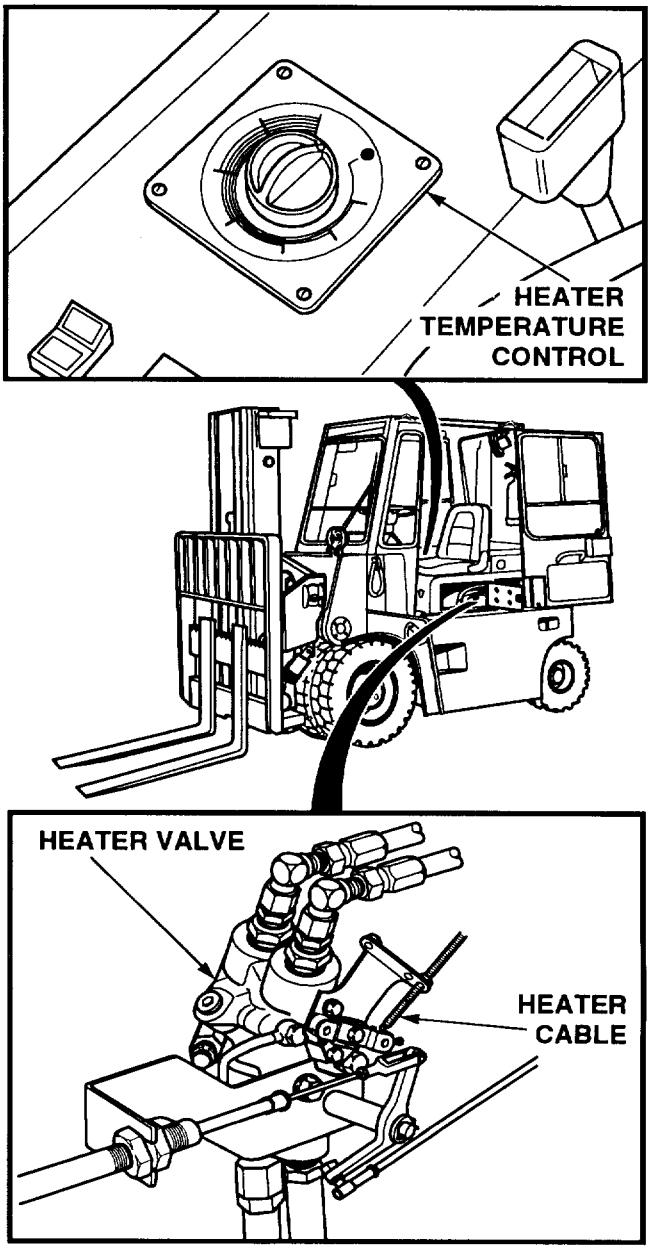

VISUAL INSPECTION
(1) Inspect temperature control operation. (a) If temperature control is damaged, replace temperature control. (b) If temperature control is not damaged, temperature control is OK.

www.truck-freeworkshop.com

10. HEATER DOES NOT BLOW WARM OR HOT AIR (CONT).

KNOWN INFO
Cool air passes from heater duct. Heater temperature control OK.
POSSIBLE PROBLEMS
Heater valve faulty. Heater cable faulty. Engine oil cooler thermostat faulty.

TEST OPTIONS
Visual inspection.
REASON FOR QUESTION
If heater valve is faulty, air temperature will not adjust.

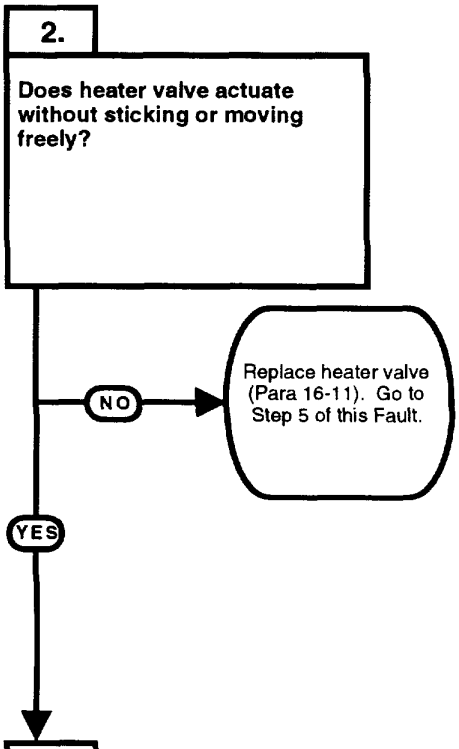

KNOWN INFO
Cool air passes from heater duct. Heater temperature control OK. Heater valve OK.
POSSIBLE PROBLEMS
Heater cable faulty. Engine oil cooler thermostat faulty.

TEST OPTIONS
Visual inspection.
REASON FOR QUESTION
If heater cable is faulty, air temperature will not adjust.

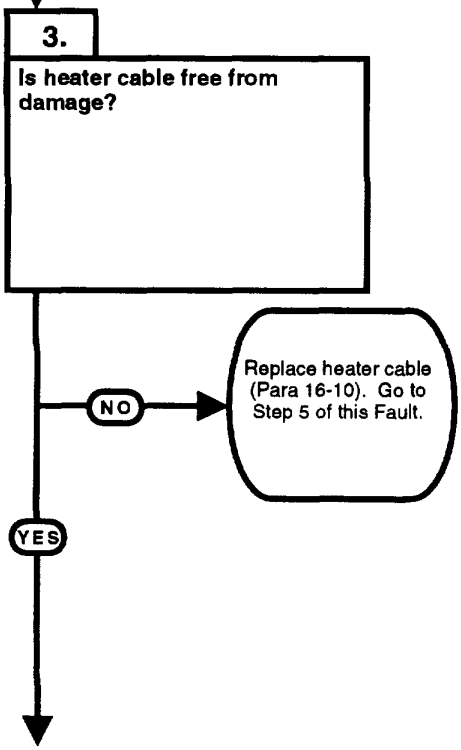

www.truck-freeworkshop.com

VISUAL INSPECTION
(1) Open engine access cover (TM 103930-669-10).
(2) Remove heater cable from heater valve (Para 16-11).
(3) Actuate heater valve and inspect operation.
(a) If valve sticks or actuates freely, replace valve.
(b) If valve does not stick and actuates correctly, valve is OK.
(4) Install heater cable on heater valve.

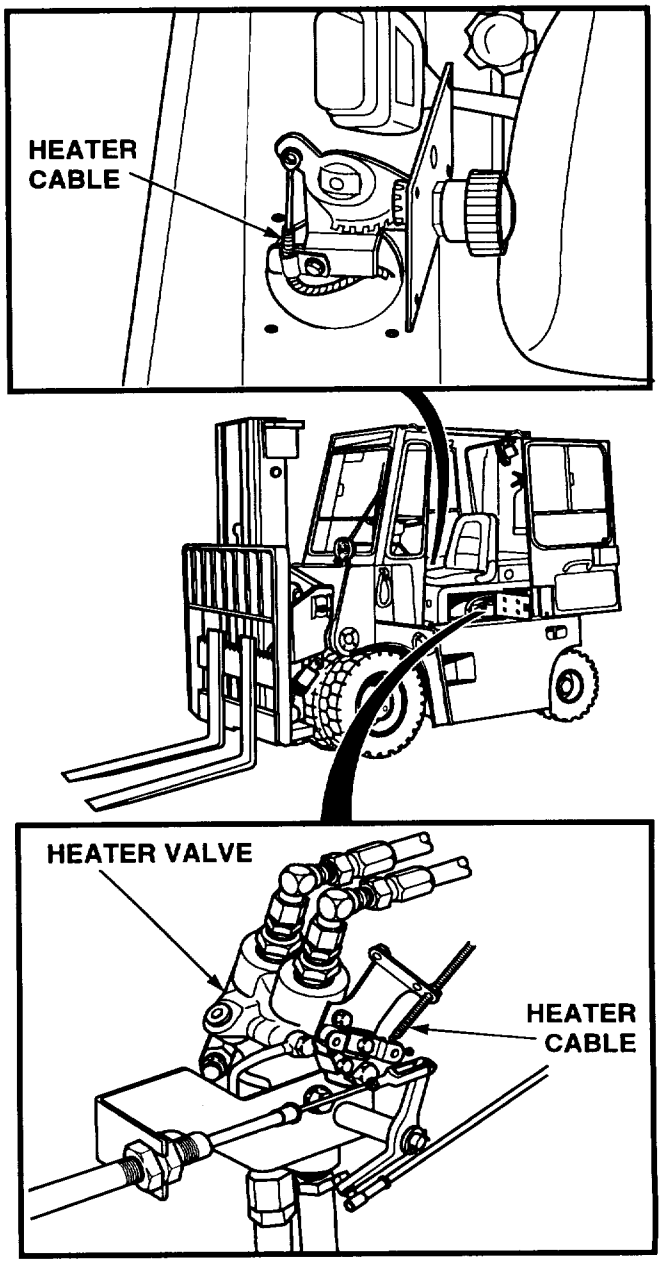

VISUAL INSPECTION
(1) Inspect heater cable for damage.
(a) If cable is damaged, replace cable (Para 16-10).
(b) If cable is not damaged, cable is OK.
(2) Install heater temperature control.
(3) Close engine access panel (TM 10-3930-669-10).

www.truck-freeworkshop.com

10. HEATER DOES NOT BLOW WARM OR HOT AIR (CONT).

KNOWN INFO
Cool air passes from heater duct. Heater temperature control OK. Heater cable OK. Heater valve OK.
POSSIBLE PROBLEMS
Engine oil cooler thermostat faulty.

TEST OPTIONS
Operation test.
REASON FOR QUESTION
If engine oil cooler thermostat is faulty, air temperature will not adjust.

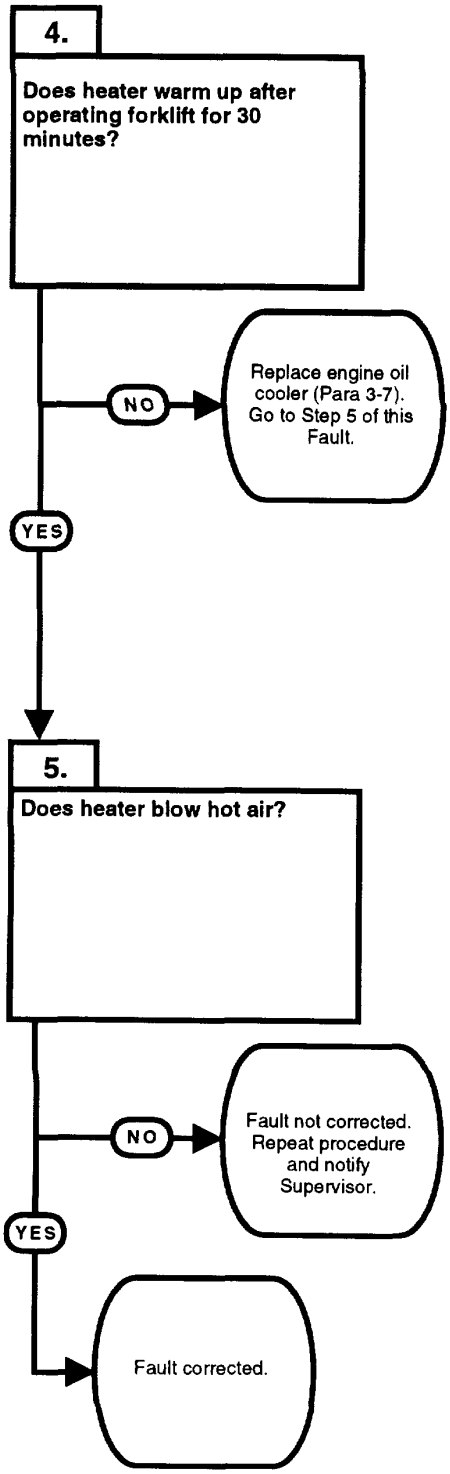

KNOWN INFO
Cool air passes from heater duct. Heater temperature control OK. Heater cable OK. Heater valve OK. Engine oil cooler thermostat OK.
POSSIBLE PROBLEMS

TEST OPTIONS
Verify repair.
REASON FOR QUESTION
If heater blower moves hot air, fault has been corrected.

www.truck-freeworkshop.com

OPERATION TEST
(1) Start engine (TM 10-3930-669-10).
(2) Set heater temperature control to maximum position.
(3) Set heater blower switch to LOW position.
(4) Operate forklift for 30 minutes.
(a) If heater does not blow hot air, replace engine oil cooler (Para 3-7).
(b) If heater blows hot air, oil cooler thermostat is OK.
(5) Shut down engine.

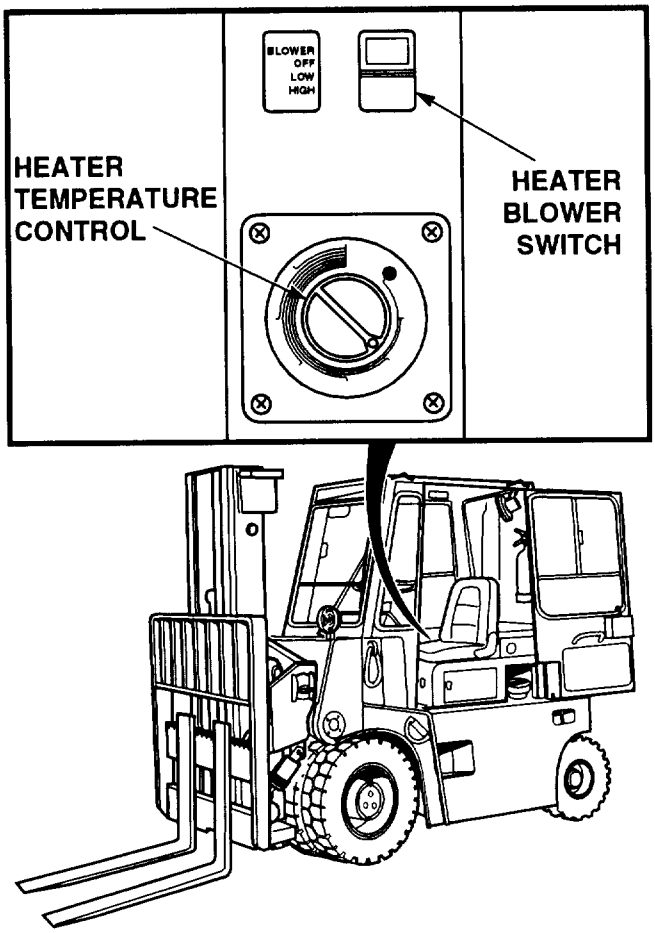

VERIFY REPAIR
(1) Start engine (TM 10-3930-669-10).
(2) Set heater temperature control to maximum position.
(3) Set heater blower switch to LOW position.
(4) Operate forklift for 30 minutes.
(a) If heater does not blow hot air, fault not corrected. Perform Steps (5) and (6) below. repeat procedure and notify Supervisor.
(b) If heater blows hot air, fault corrected.
(5) Set heater blower switch to OFF position.
(6) Shut down engine.

www.truck-freeworkshop.com

2-14. ELECTRICAL SYSTEM TROUBLESHOOTING.

This Paragraph covers Electrical System Troubleshooting. The Electrical System Fault Index, Table 2-5, lists faults for the electrical system of the forklift.

Table 2-5. Electrical System Fault index

Fault No.	Troubleshooting Procedure	Page
1.	All 24 vdc Circuits Do Not Operate	2-124
2.	Ammeter Gives No or Incorrect Reading	2-132
3.	Fuel Gauge Gives No or Incorrect Reading	2-138
4.	Transmission Temperature Gauge Gives No or Incorrect Reading	2-144
5.	All Gauges Do Not Operate	2-150
6.	Hour Meter Does Not Operate	2-154
7.	Taillights, Front Light, Gauge Lights, and Mast Light Do Not Operate	2-162
8.	Rear Light(s) Does Not Operate	2-168
9.	Top, Front, and Rear Wipers Do Not Operate	2-176
10.	Rear Wiper Does Not Operate	2-180
11.	Rear Wiper Does Not Operate in LOW	2-184
12.	Cab Light(s) Does Not Operate	2-188
13.	Gauge Light Does Not Operate	2-194
14.	Stoplight Does Not Operate	2-198
15.	Horn Does Not Operate	2-206
16.	Fan(s) Does Not Operate	2-214
17.	Heater Blower Does Not Operate	2-218
18.	Heater Blower Does Not Operate in HIGH	2-224
19.	Glow Plug Indicator Does Not Operate	2-228

www.truck-freeworkshop.com

Table 2-5. Electrical System Fault Index - CONT.

Fault No.	Troubleshooting Procedure	Page
20.	Broken Belt Buzzer and Indicator Do Not Operate	2-244
21.	Transmission Does Not Operate in Forward	2-250
22.	Transmission Does Not Operate in Forward or Reverse	2-256
23.	High Range Indicator Does Not Operate	2-264
24.	Transmission Does Not Engage in High Range	2-268
25.	Engine Starts With Transmission Engaged	2-274
26.	Electrical System Does Not Maintain a Charge	2-282

www.truck-freeworkshop.com

2-14. ELECTRICAL SYSTEM TROUBLESHOOTING (CONT).

1. ALL 24 VDC CIRCUITS DO NOT OPERATE.

INITIAL SETUP

Tools and Special Tools
- Tool Kit, General Mechanic's: Automotive (Item 1, Appendix B)
- Multimeter (Item 2, Appendix B)
- STE/ICE-R (Optional) (Item 14, Appendix B)
- Jumper Wire

Equipment Condition
- Engine OFF (TM 10-3930-669-10)
- MAIN POWER switch OFF (TM 10-3930-669-10)
- Parking brake applied (TM 10-3930-669-10)
- Wheels chocked (TM 10-3930-669-10)

References
- TM 10-3930-669-10

KNOWN INFO
Main disconnect switch is on. Engine cranks but does not stay running.
POSSIBLE PROBLEMS
Wire 34 faulty. Relay R2 ground wire faulty. Wire 7 faulty. Wire 26 faulty. Relay R2 faulty. Engine switch faulty.

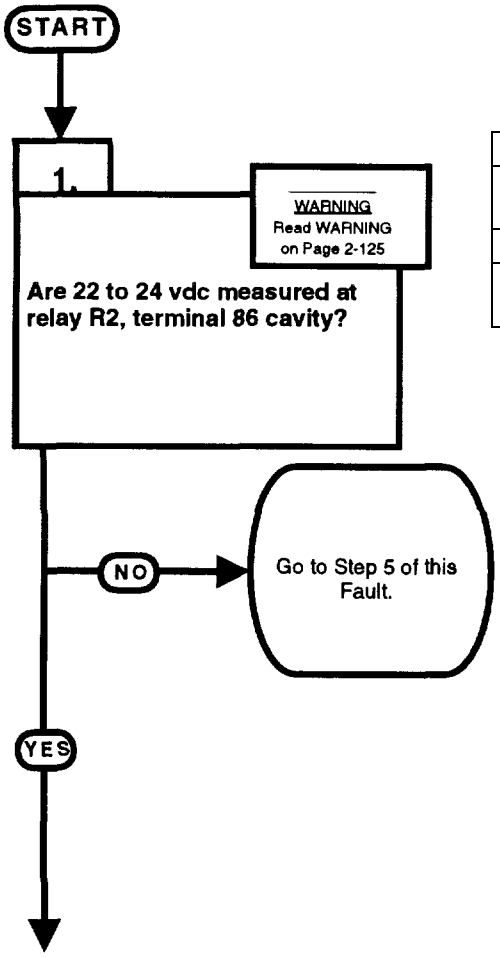

TEST OPTIONS
Voltage test. STE/ICE-R #89.
REASON FOR QUESTION
If 22 to 24 vdc are not present, wire 34 is faulty.

www.truck-freeworkshop.com

WARNING

Remove all jewelry such as rings, dog tags, bracelets, etc. If jewelry contacts battery terminal, a direct short may result in instant heating of tools, damage to equipment, and injury or death to personnel.

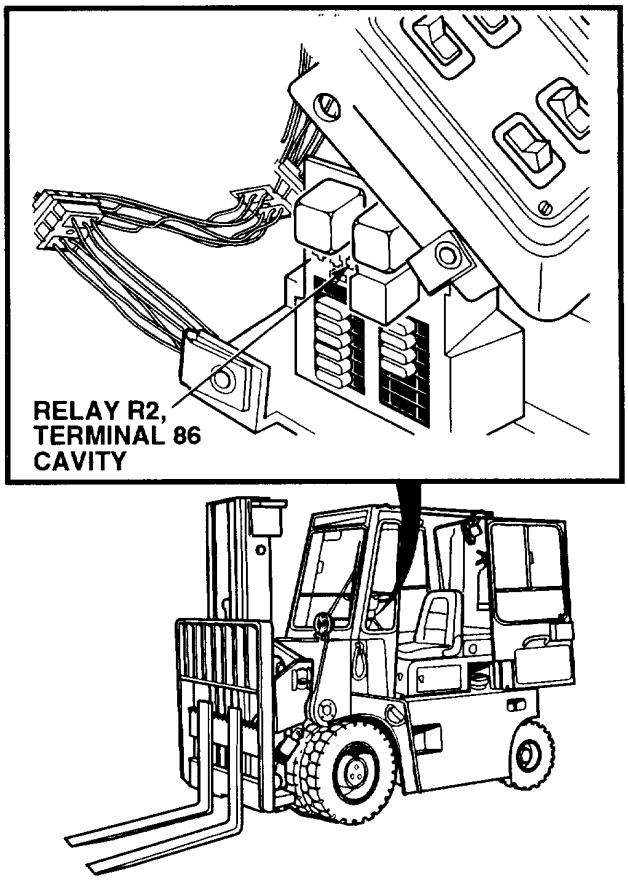

VOLTAGE TEST

(1) Remove relay R2 (Para 7-33).
(2) Set multimeter select switch to VOLTS DC.
(3) Connect positive (+) multimeter lead to relay R2, terminal 86 cavity.
(4) Connect negative (-) multimeter lead to a known good ground.
(5) Set MAIN POWER switch to ON position (TM 10-3930-669-10).
(6) Set engine switch to ignition position (TM 10-3930-669-10).
  (a) If there are not 22 to 24 vdc present, go to Step 5 of this Fault.
  (b) If there are 22 to 24 vdc present, wire 34 is OK.
(7) Set MAIN POWER switch to OFF position.
(8) Set engine switch to off position.

www.truck-freeworkshop.com

1. ALL 24 VDC CIRCUITS DO NOT OPERATE (CONT).

KNOWN INFO
Main disconnect switch is on. Engine cranks but does not stay running. Wire 34 OK.
POSSIBLE PROBLEMS
Relay R2 ground wire faulty. Wire 7 faulty. Wire 26 faulty. Relay R2 faulty Engine switch faulty.

2.

Is continuity measured between relay R2, terminal 85 cavity and a known good ground?

NO → Repair relay R2 ground wire (see schematic Appendix F). Go to Step 6 of this Fault.

YES ↓

TEST OPTIONS
Continuity test. STE/ICE-R #91.
REASON FOR QUESTION
If continuity is not present, relay R2 ground wire is faulty.

KNOWN INFO
Main disconnect switch is on. Engine cranks but does not stay running. Wire 34 OK. Relay R2 ground wire OK.
POSSIBLE PROBLEMS
Wire 7 faulty. Wire 26 faulty. Relay R2 faulty. Engine switch faulty.

3.

WARNING
Read WARNING on Page 2-127

Are 22 to 24 vdc measured at relay R2, terminal 30 cavity?

NO → Repair wire 7 (see schematic Appendix F). Go to Step 6 of this Fault.

YES ↓

TEST OPTIONS
Voltage test. STE/ICE-R #89.
REASON FOR QUESTION
If 22 to 24 vdc are not present, wire 7 is faulty.

www.truck-freeworkshop.com

CONTINUITY TEST

(1) Set multimeter select switch to OHMS.
(2) Check continuity between relay R2, terminal 85 cavity and a known good ground.
  (a) If there is no continuity, repair relay R2 ground wire (see schematic Appendix F)
  (b) If there is continuity, relay R2 ground wire is OK.

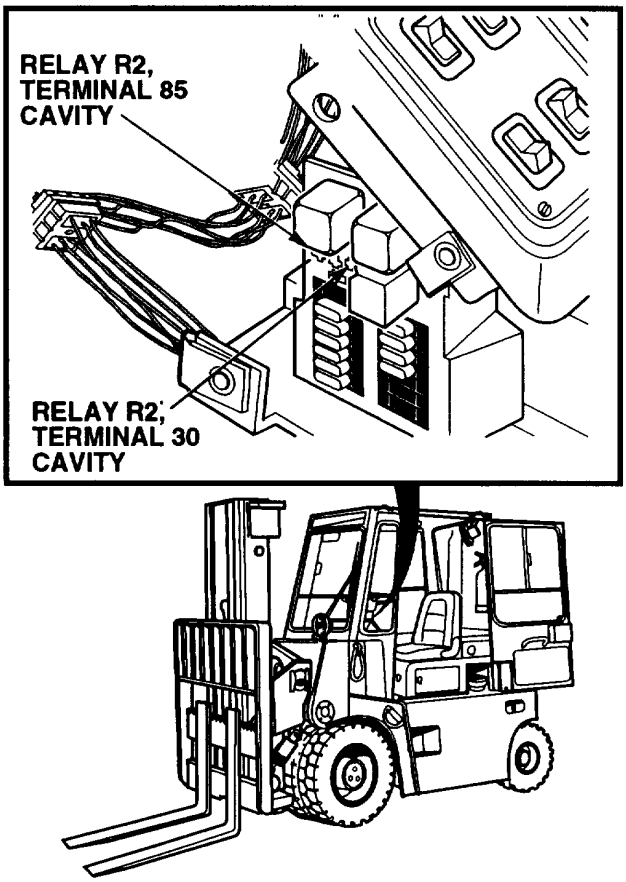

VOLTAGE TEST

(1) Set multimeter select switch to VOLTS DC.
(2) Connect positive (+) multimeter lead to relay R2, terminal 30 cavity.
(3) Connect negative (-) multimeter lead to a known good ground.
(4) Set MAIN POWER switch to ON position (TM 10-3930-669-10).
  (a) If there are not 22 to 24 vdc present, repair wire 7 (see schematic Appendix F).
  (b) If there are 22 to 24 vdc present, wire 7 is OK.
(5) Set MAIN POWER switch to OFF position.

www.truck-freeworkshop.com

1. ALL 24 VDC CIRCUITS DO NOT OPERATE (CONT).

KNOWN INFO
Main disconnect switch is on. Engine cranks but does not stay running. Wire 34 OK. Relay R2 ground wire OK. Wire 7 OK.
POSSIBLE PROBLEMS
Wire 26 faulty. Relay R2 faulty. Engine switch faulty.

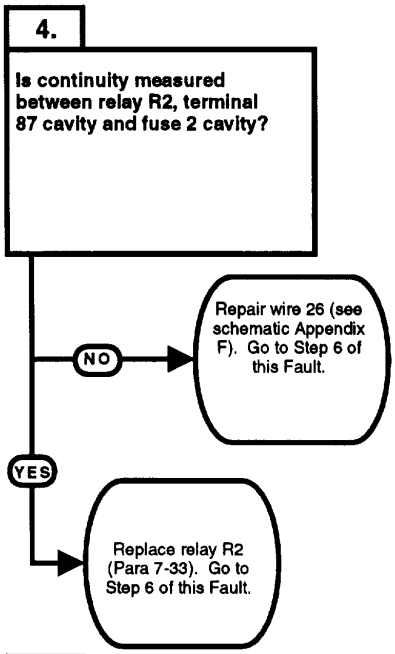

TEST OPTIONS
Continuity test. STE/ICE-R #91.
REASON FOR QUESTION
If continuity is not present, wire 26 is faulty. If wire 26 is OK, relay R2 is faulty.

KNOWN INFO
Main disconnect switch is on. Engine cranks but does not stay running. Wire 34 OK. Relay R2 ground wire OK. Wire 7 OK. Wire 26 OK. Relay R2 OK.
POSSIBLE PROBLEMS
Engine switch faulty.

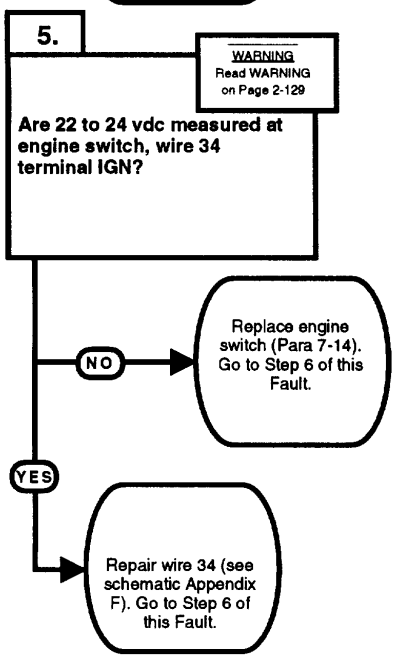

TEST OPTIONS
Voltage test. STE/ICE-R #89.
REASON FOR QUESTION
If 22 to 24 vdc are not present, engine switch is faulty.

www.truck-freeworkshop.com

WARNING

Remove all jewelry such as rings, dog tags, bracelets, etc. If jewelry contacts battery terminal, a direct short may result in instant heating of tools, damage to equipment, and injury or death to personnel.

CONTINUITY TEST

(1) Remove fuse 2 (Para 7-33).
(2) Set multimeter select switch to OHMS.
(3) Check continuity between relay R2, terminal 87 cavity and fuse 2 cavity.
  (a) If there is no continuity, repair wire 26 (see schematic Appendix F).
  (b) If there is continuity, replace relay R2.
(4) Install fuse 2 (Para 7-33).
(5) Install relay R2 (Para 7-33).

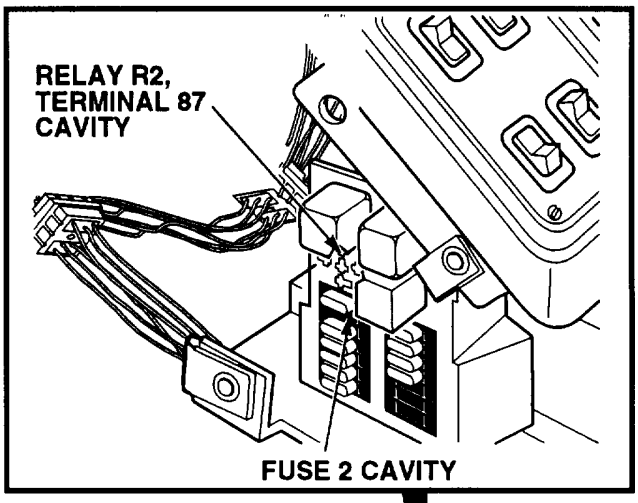

VOLTAGE TEST

(1) Remove lower and upper column covers (Para 7-21).
(2) Set multimeter select switch to VOLTS DC.
(3) Connect positive (+) multimeter lead to engine switch, wire 34 terminal.
(4) Connect negative (-) multimeter lead to a known good ground.
(5) Set MAIN POWER switch to ON position (TM 10-3930-669-10).
(6) Set engine switch to ignition position (TM 10-3930-669-10).
  (a) If there are not 22 to 24 vdc present, replace engine switch.
  (b) If there are 22 to 24 vdc present, engine switch is OK.
(7) Set MAIN POWER switch to OFF position.
(8) Set engine switch to off position.
(9) Install upper and lower column covers (Para 7-21).

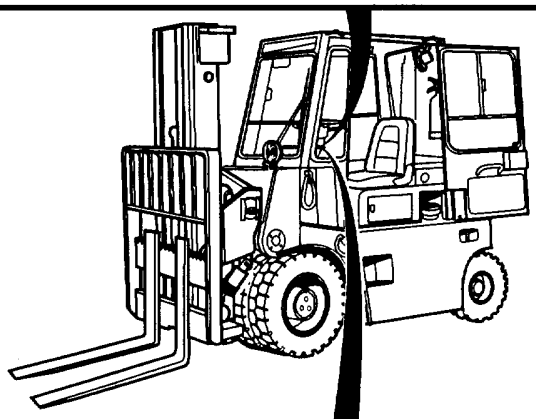

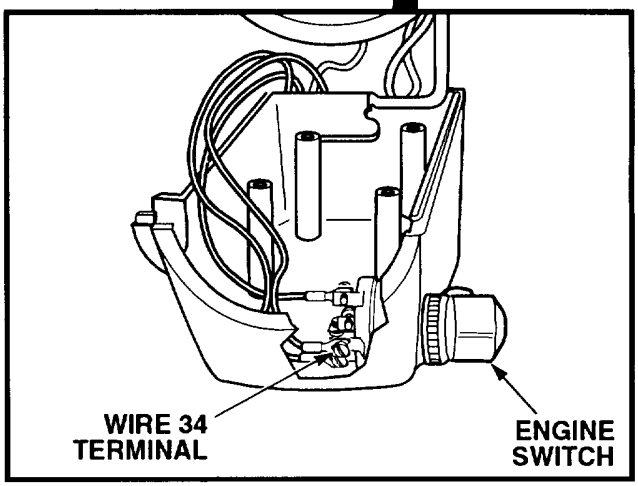

www.truck-freeworkshop.com

1. ALL 24 VDC CIRCUITS DO NOT OPERATE (CONT).

KNOWN INFO
Main disconnect switch is on. Engine cranks but does not stay running. Wire 34 OK. Relay R2 ground wire OK. Wire 7 OK. Wire 26 OK. Relay R2 OK. Engine switch OK.
POSSIBLE PROBLEMS

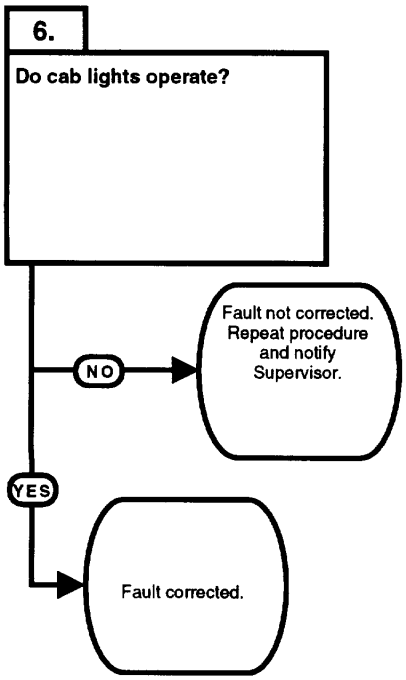

TEST OPTIONS
Verify repair.
REASON FOR QUESTION
If cab lights operate, fault has been corrected.

www.truck-freeworkshop.com

VERIFY REPAIR
(1) Set MAIN POWER switch to ON position (TM 10-3930-669-10). (2) Set cab lights switch to ON position (TM 10-3930-669-10). (3) Observe light. (a) If cab lights do not operate, fault not corrected. Perform Steps (4) and (5) below. Repeat procedure and notify Supervisor. (4) Set cab lights switch to OFF position. (5) Set MAIN POWER switch to OFF position.

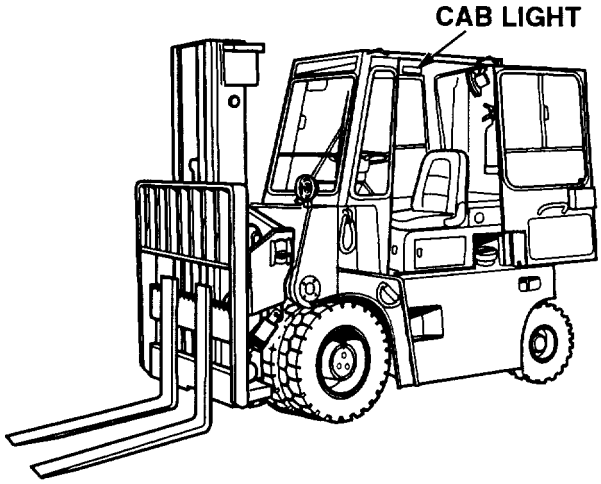

www.truck-freeworkshop.com

2-14. ELECTRICAL SYSTEM TROUBLESHOOTING (CONT).

2. AMMETER GIVES NO OR INCORRECT READING.

INITIAL SETUP

Tools and Special Tools
Tool Kit, General Mechanic's: Automotive (Item 1, Appendix B)
Multimeter (Item 2, Appendix B)
STE/ICE-R (Optional) (Item 14, Appendix B)

Equipment Condition
Engine OFF (TM 10-3930-669-10)
MAIN POWER switch OFF (TM 10-3930-669-10)
Parking brake applied (TM 10-3930-669-10)
Wheels chocked (TM 10-3930-669-10)

References
TM 10-3930-669-10

KNOWN INFO
Batteries OK.
POSSIBLE PROBLEMS
Wire 11 faulty. Ammeter ground wire faulty. Wire 12 faulty. Ammeter faulty.

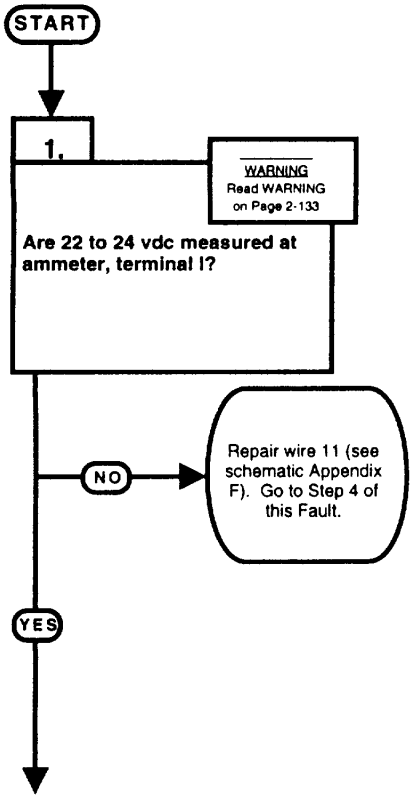

TEST OPTIONS
Voltage test. STE/ICE-R #89.
REASON FOR QUESTION
If 22 to 24 vdc are not present, wire 11 is faulty.

www.truck-freeworkshop.com

WARNING

Remove all jewelry such as rings, dog tags, bracelets, etc. If jewelry contacts battery terminal, a direct short may result in instant heating of tools, damage to equipment, and injury or death to personnel.

VOLTAGE TEST

(1) Remove instrument panel (Para 7-8).
(2) Set multimeter select switch to VOLTS DC.
(3) Connect positive (+) multimeter lead to ammeter, terminal I.
(4) Connect negative (-) multimeter lead to a known good ground.
   (a) If there are not 22 to 24 vdc present, repair wire 11 (see schematic Appendix F)
   (b) If there are 22 to 24 vdc present, wire 11 is OK.

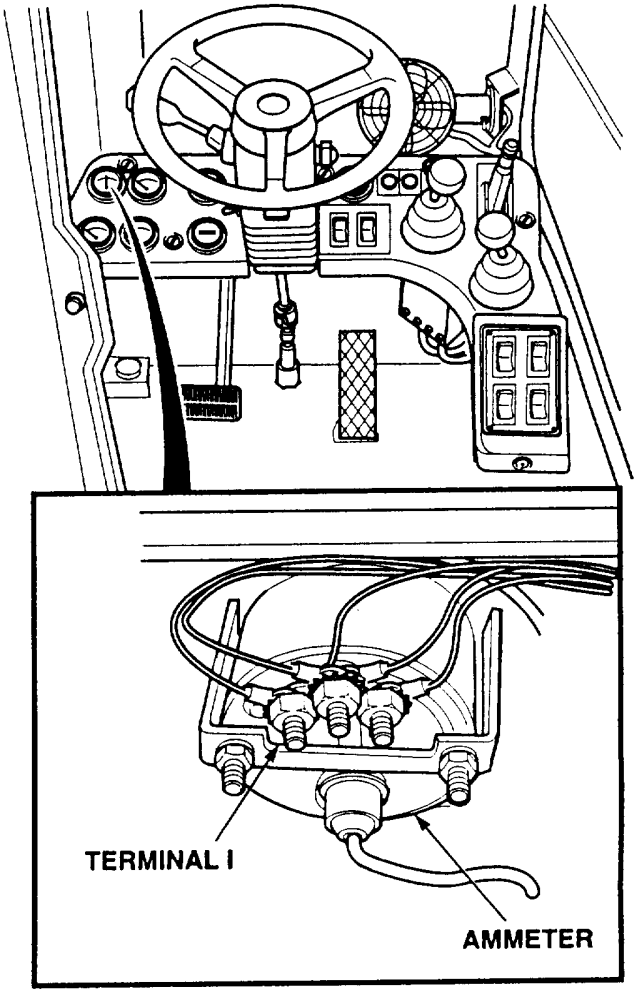

www.truck-freeworkshop.com

2. AMMETER GIVES NO OR INCORRECT READING (CONT).

KNOWN INFO
Batteries OK. Wire 11 OK.
POSSIBLE PROBLEMS
Ammeter ground wire faulty. Wire 12 faulty. Ammeter faulty.

TEST OPTIONS
Continuity test. STE/ICE-R #91.
REASON FOR QUESTION
If continuity is not present, ammeter ground wire is faulty.

2.

Is continuity measured between ammeter, terminal G and a known good ground?

NO → Repair ammeter ground wire (see schematic Appendix F). Go to Step 4 of this Fault.

YES ↓

KNOWN INFO
Batteries OK. Wire 11 OK. Ammeter ground wire OK.
POSSIBLE PROBLEMS
Wire 12 faulty. Ammeter faulty.

TEST OPTIONS
Voltage test. STE/ICE-R #89.
REASON FOR QUESTION
If 22 to 24 vdc are not present, sensor wire 12 is faulty.

3.

WARNING
Read WARNING on Page 2-135

Are 22 to 24 vdc measured at ammeter, terminal S?

NO → Repair wire 12 (see schematic Appendix F). Go to Step 4 of this Fault.

YES → Replace ammeter (Para 7-9). Go to Step 4 of this Fault.

www.truck-freeworkshop.com

WARNING

Remove all jewelry such as rings, dog tags, bracelets, etc. If jewelry contacts battery terminal, a direct short may result in instant heating of tools, damage to equipment, and injury or death to personnel.

CONTINUITY TEST

(1) Set multimeter select switch to OHMS.
(2) Check continuity between ammeter, terminal G and a known good ground.
  (a) If there is no continuity, repair gauge ground wire (see schematic Appendix F).
  (b) If there is continuity, gauge ground wire is OK.

VOLTAGE TEST

(1) Set multimeter select switch to VOLTS DC.
(2) Connect positive (+) multimeter lead to ammeter, terminal S.
(3) Connect negative (-) multimeter lead to a known good ground.
  (a) If there are not 22 to 24 vdc present, repair wire 12 (see schematic Appendix F).
  (b) If there are 22 to 24 vdc present, replace ammeter (Para 7-9).
(4) Install instrument panel (Para 7-8).

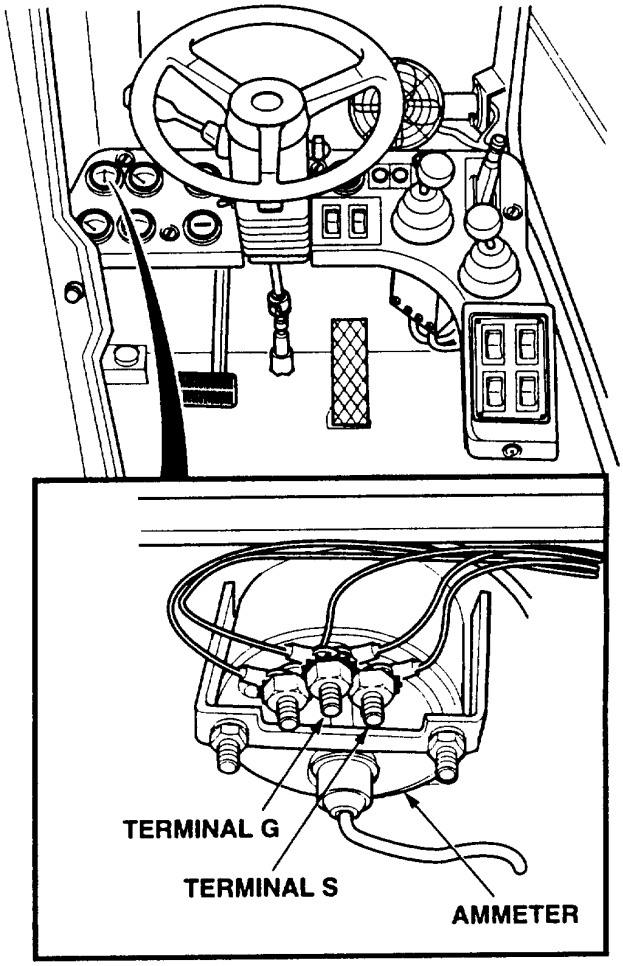

www.truck-freeworkshop.com

2. AMMETER GIVES NO OR INCORRECT READING (CONT).

KNOWN INFO
Batteries OK. Wire 11 OK. Ammeter ground wire OK. Wire 12 OK . Ammeter OK.
POSSIBLE PROBLEMS

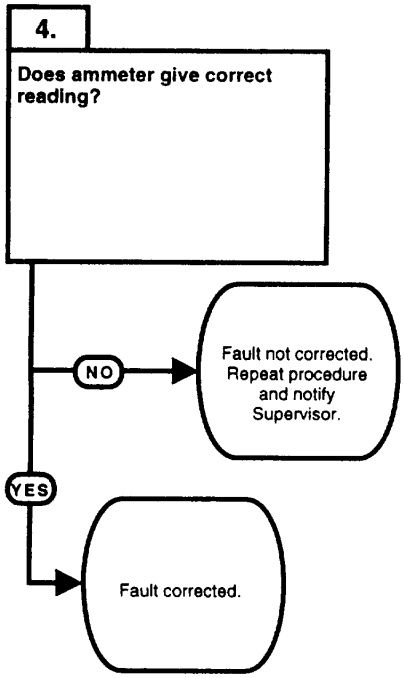

TEST OPTIONS
Verify repair.
REASON FOR QUESTION
If ammeter gives correct reading, fault has been corrected.

www.truck-freeworkshop.com

VERIFY REPAIR
(1) Start engine (TM 10-3930-669-10). (2) Observe ammeter. (a) If ammeter does not give correct reading, fault not corrected. Perform Step (3) below. Repeat procedure and notify Supervisor. (b) If ammeter gives correct reading, fault corrected. (3) Shut down engine.

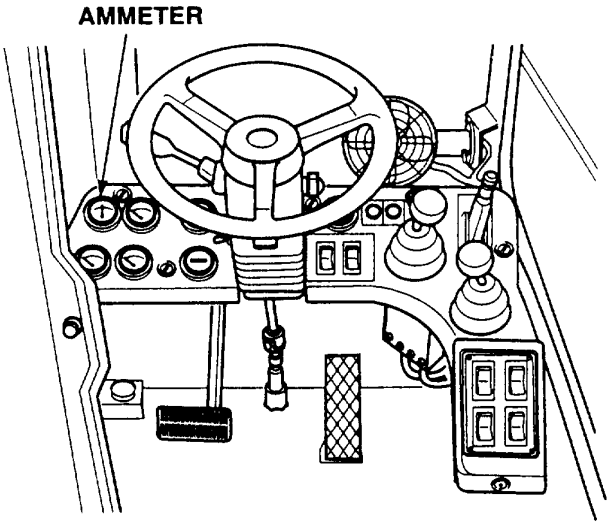

www.truck-freeworkshop.com

2-14. ELECTRICAL SYSTEM TROUBLESHOOTING (CONT).

3. FUEL GAUGE GIVES NO OR INCORRECT READING.

INITIAL SETUP

Tools and Special Tools
- Tool Kit, General Mechanic's: Automotive (Item 1, Appendix B)
- Multimeter (Item 2, Appendix B)
- STE/ICE-R (Optional) (Item 14, Appendix B)
- Jumper Wire

Equipment Condition
- Engine OFF (TM 10-3930-669-10)
- MAIN POWER switch OFF (TM 10-3930-669-10)
- Parking brake applied (TM 10-3930-669-10)
- Wheels chocked (TM 10-3930-669-10)

References
- TM 10-3930-669-10

KNOWN INFO
Fuel Tank is full.
POSSIBLE PROBLEMS
Fuel level sensor faulty. Gauge wire 5 faulty. Gauge ground wire faulty. Wire 18 faulty. Fuel level gauge faulty.

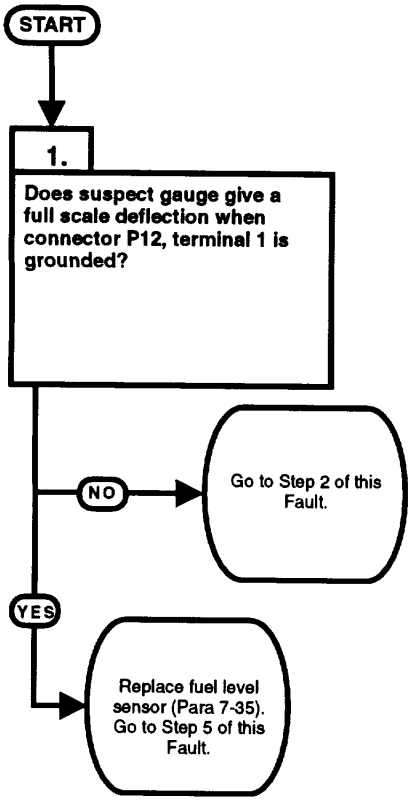

TEST OPTIONS
Gauge operation test.
REASON FOR QUESTION
If suspect gauge reads at full scale, sensor is faulty.

www.truck-freeworkshop.com

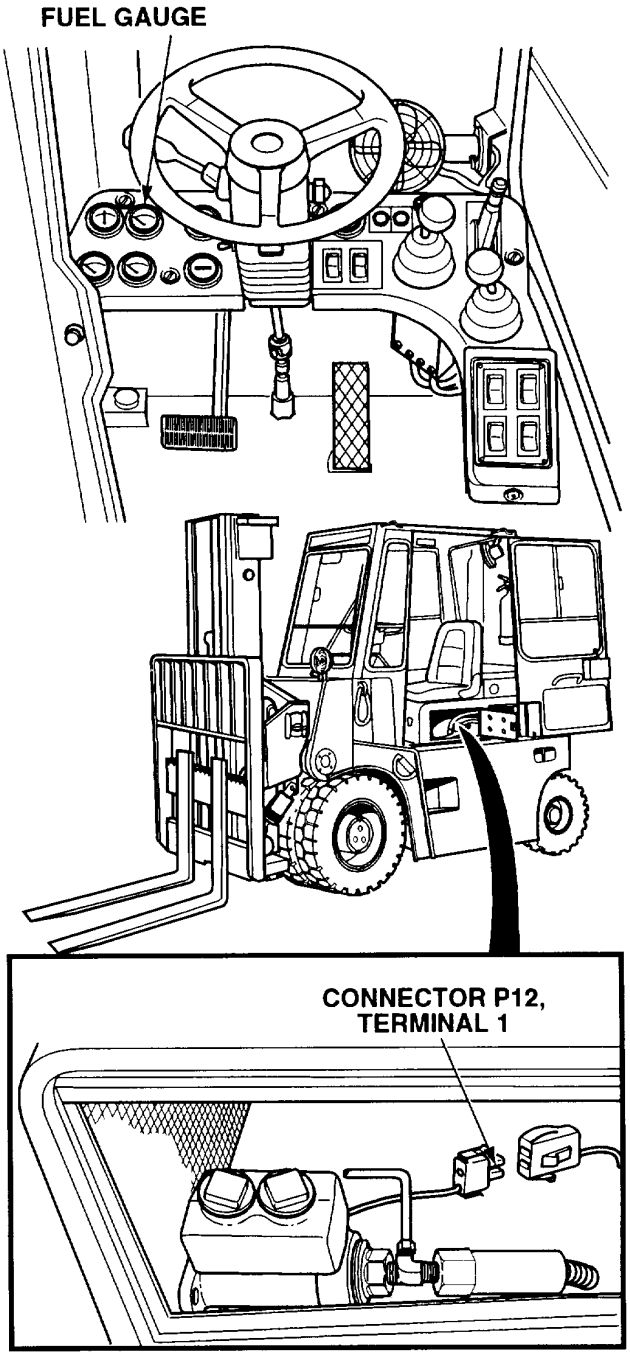

CONTINUITY TEST

(1) Ground connector P12, terminal 1.
(2) Set MAIN POWER switch to ON position (TM 10-3930-669-10).
(3) Set engine switch to ignition position (TM 10-3930-669-10).
(4) Observe gauge needle for reading.
  (a) If gauge does not have a full scale deflection, perform Steps (5) through (7) and go to Step 2 of this Fault.
  (b) If gauge has a full scale deflection, perform Steps (6) through (7) below replace fuel sensor (Para 7-35).
(5) Connect connector P12 on fuel level sender connector.
(6) Set engine switch to off position.
(7) Set MAIN POWER switch to OFF position.

www.truck-freeworkshop.com

3. FUEL GAUGE GIVES NO OR INCORRECT READING (CONT).

KNOWN INFO
Fuel tank is full. Fuel level sensor OK.
POSSIBLE PROBLEMS
Gauge wire 5 faulty. Gauge ground wire faulty. Wire 18 faulty. Fuel level gauge faulty.

TEST OPTIONS
Voltage test. STE/ICE-R #89.
REASON FOR QUESTION
If 22 to 24 vdc are not present, wire 5 is faulty.

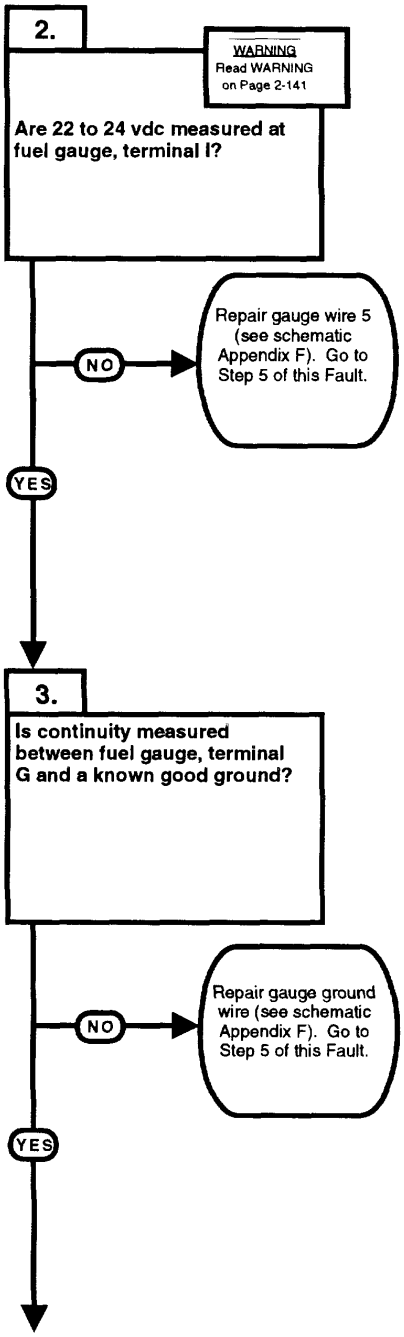

KNOWN INFO
Fuel tank is full. Fuel level sensor OK. Gauge wire 5 OK.
POSSIBLE PROBLEMS
Gauge ground wire faulty. Wire 18 faulty. Fuel level gauge faulty.

TEST OPTIONS
Continuity test. STE/ICE-R #91.
REASON FOR QUESTION
If continuity is not present , gauge ground wire is faulty.

www.truck-freeworkshop.com

WARNING

Remove all jewelry such as rings, dog tags, bracelets, etc. If jewelry contacts battery terminal, a direct short may result in instant heating of tools, damage to equipment, and injury or death to personnel.

VOLTAGE TEST

(1) Remove instrument panel (Para 7-8).
(2) Set multimeter select switch to VOLTS DC.
(3) Connect positive (+) multimeter lead to fuel gauge, terminal I.
(4) Connect negative (-) multimeter lead to a known good ground.
(5) Set MAIN POWER switch to ON position (TM 10-3930-669-10).
(6) Set engine switch to ignition position (TM 10-3930-669-10).
  (a) If there are not 22 to 24 vdc present, repair gauge wire 5 (see schematic Appendix F)
  (b) If there are 22 to 24 vdc present, lead wire 5 is OK.
(7) Set MAIN POWER switch to OFF position.
(8) Set engine switch to off position.

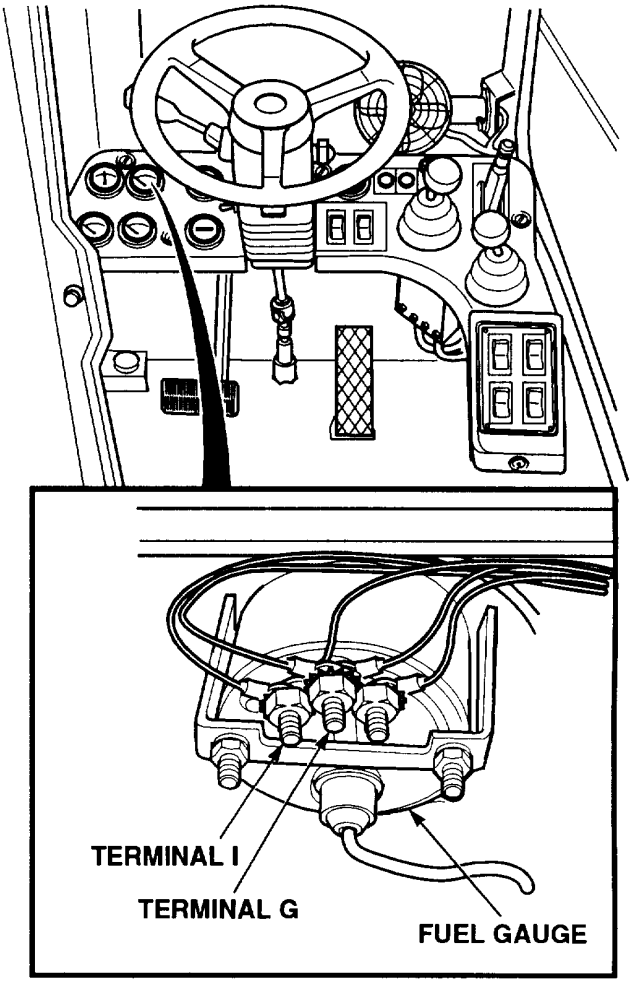

CONTINUITY TEST

(1) Set multimeter select switch to OHMS.
(2) Check continuity between fuel gauge, terminal G and a known good ground.
  (a) If there is no continuity, repair gauge ground wire (see schematic Appendix F).
  (b) If there is continuity, gauge ground wire is OK.

www.truck-freeworkshop.com

3. FUEL GAUGE GIVES NO OR INCORRECT READING (CONT).

KNOWN INFO
Fuel tank is full. Fuel level sensor faulty. Gauge wire 5 faulty. Gauge ground wire faulty.
POSSIBLE PROBLEMS
Wire 18 faulty. Fuel level gauge faulty.

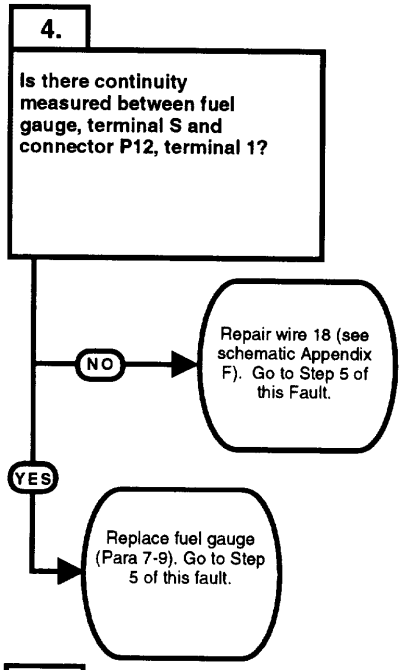

TEST OPTIONS
Continuity test. STE/ICE-R #91.
REASON FOR QUESTION
If continuity is not present , wire 18 is faulty.

KNOWN INFO
Fuel tank is full. Fuel level sensor OK. Gauge wire 5 OK. Gauge ground wire OK. Wire 18 OK. Fuel level gauge OK.
POSSIBLE PROBLEMS

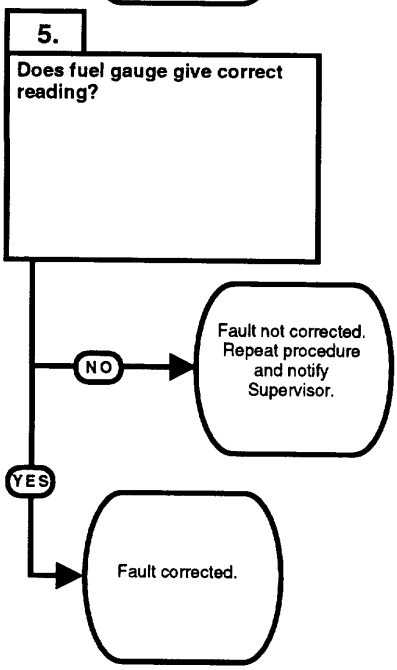

TEST OPTIONS
Verify repair.
REASON FOR QUESTION
If fuel gauge gives correct reading, fault has been corrected.

www.truck-freeworkshop.com

CONTINUITY TEST

(1) Set multimeter select switch to OHMS.
(2) Disconnect connector P12 from fuel sender connector.
(3) Check continuity between fuel gauge, terminal S and connector P12, terminal 1.
  (a) If there is no continuity, repair sensor wire 18 (see schematic Appendix F).
  (b) If there is continuity, replace fuel gauge (Para 7-9) and go to Step 5 of this Fault.
(4) Install instrument panel (Para 7-8).

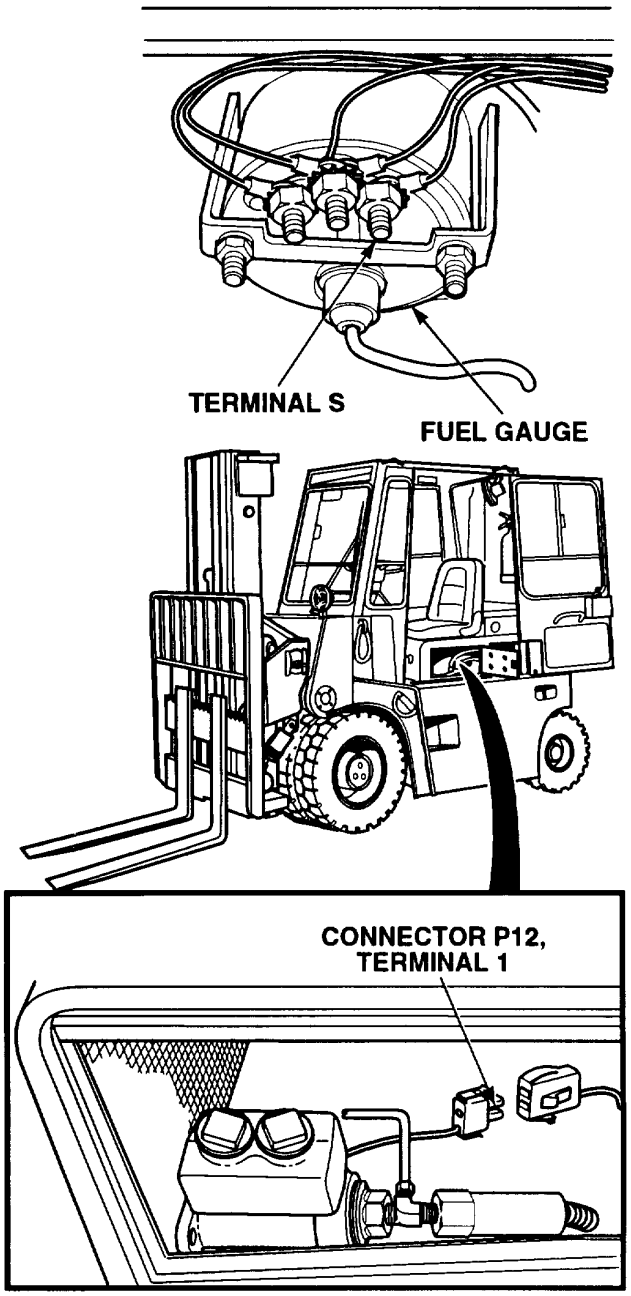

VERIFY REPAIR

(1) Start engine (TM 10-3930669-10).
(2) Observe fuel gauge(s).
  (a) If gauge does not give correct reading, fault not corrected. Perform Step (3) below. Repeat procedure and notify Supervisor.
  (b) If gauge gives correct reading, fault corrected.
(3) Shut down engine.

www.truck-freeworkshop.com

2-14. ELECTRICAL SYSTEM TROUBLESHOOTING (CONT).

4. TRANSMISSION TEMPERATURE GAUGE GIVES NO OR INCORRECT READING.

INITIAL SETUP

Tools and Special Tools
- Tool Kit, General Mechanic's: Automotive (Item 1, Appendix B)
- Multimeter (Item 2, Appendix B)
- STE/ICE-R (Optional) (Item 14, Appendix B)
- Jumper Wire

References
- TM 10-3930-669-10

Equipment Condition
- Engine OFF (TM 10-3930-669-10)
- MAIN POWER switch OFF (TM 10-3930-669-10)
- Parking brake applied (TM 10-3930-669-10)
- Wheels chocked (TM 10-3930-669-10)

KNOWN INFO
All other gauges operate.
POSSIBLE PROBLEMS
Transmission temperature sensor faulty. Gauge wire 5 faulty. Gauge ground wire faulty. Wire 15 faulty. Transmission temperature gauge faulty.

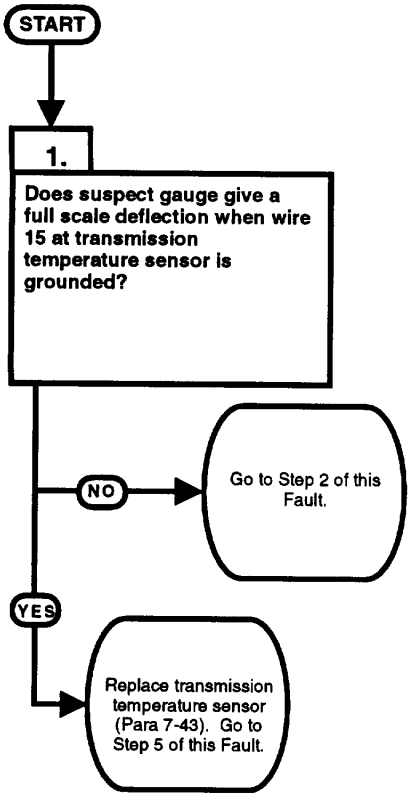

TEST OPTIONS
Gauge operation test.
REASON FOR QUESTION
If suspect gauge reads at full scale, temperature sensor is faulty.

www.truck-freeworkshop.com

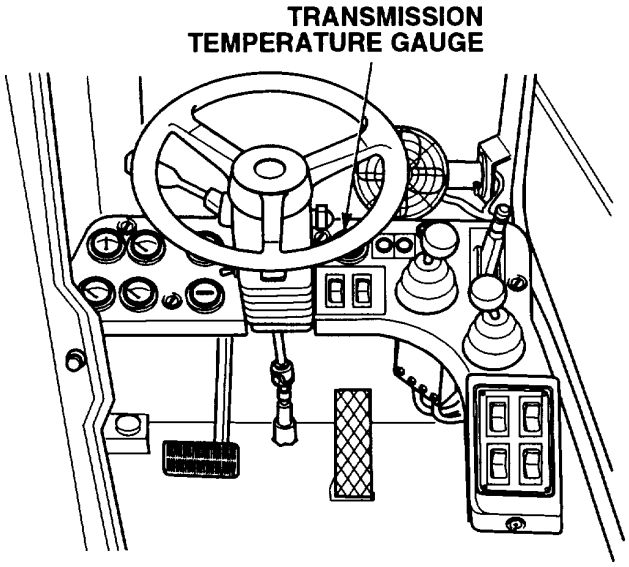

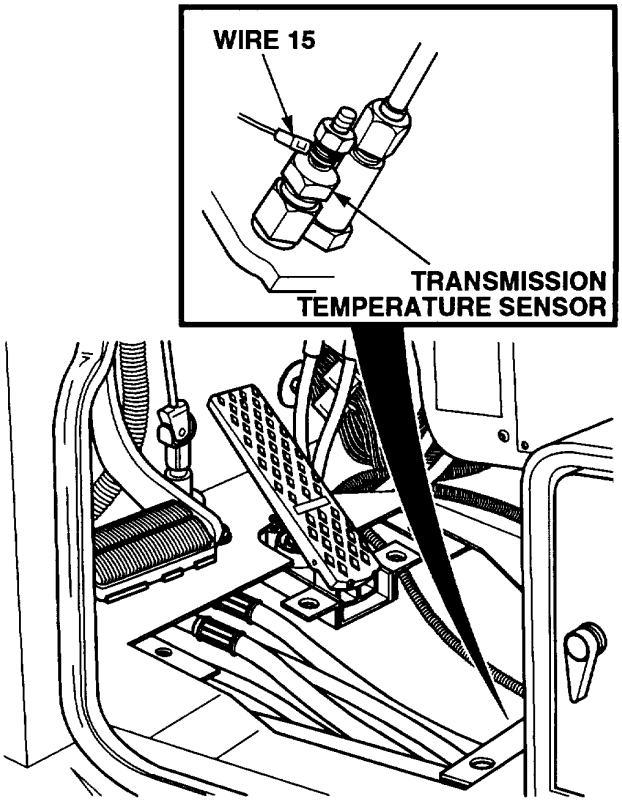

CONTINUITY TEST

(1) Disconnect wire 15 from transmission temperature sensor and connect to good ground (Para 7-43).
(2) Set MAIN POWER switch to ON position (TM 10-3930-669-10).
(3) Set engine switch to ignition position (TM 10-3930-669-10).
(4) Observe gauge needle for reading.
  (a) If gauge does not have a full scale deflection, perform Steps (5) through (8) below and go to Step 2 of this Fault.
  (b) If gauge has a full scale deflection, perform Steps (5) and (6), below and replace transmission temperature sensor (Para 7-43).
(5) Set engine switch to off position.
(6) Connect wire 15 to temperature sensor (Para 7-43).
(7) Set MAIN POWER switch to OFF position.
(8) Install floor plate (Para 15-12).

www.truck-freeworkshop.com

4. TRANSMISSION TEMPERATURE GAUGE GIVES NO OR INCORRECT READING (CONT).

KNOWN INFO
All other gauges operate. Transmission temperature sensor OK.
POSSIBLE PROBLEMS
Gauge wire 5 faulty. Gauge ground wire faulty. Wire 15 faulty. Transmission temperature gauge faulty.

2.

WARNING
Read WARNING on Page 2-147

Are 22 to 24 vdc measured at transmission temperature gauge, terminal I?

NO → Repair gauge wire 5 (see schematic Appendix F). Go to Step 3 of this Fault.

YES ↓

TEST OPTIONS
Voltage test. STE/ICE-R #89.
REASON FOR QUESTION
If 22 to 24 vdc are not present , wire 5 is faulty.

KNOWN INFO
All other gauges operate. Transmission temperature sensor OK. Gauge wire 5 OK.
POSSIBLE PROBLEMS
Gauge ground wire faulty. Wire 15 faulty. Transmission temperature gauge faulty.

3.

Is continuity measured between transmission temperature gauge, terminal G and a known good ground?

NO → Repair gauge ground wire (see schematic Appendix F). Go to Step 5 of this Fault.

YES ↓

TEST OPTIONS
Continuity test. STE/ICE-R #91.
REASON FOR QUESTION
If continuity is not present , gauge ground wire is faulty.

www.truck-freeworkshop.com

WARNING

Remove all jewelry such as rings, dog tags, bracelets, etc. If jewelry contacts battery terminal, a direct short may result in instant heating of tools, damage to equipment, and injury or death to personnel.

VOLTAGE TEST

(1) Remove instrument panel (Para 7-8).
(2) Set multimeter select switch to VOLTS DC.
(3) Connect positive (+) multimeter lead to transmission temperature gauge, terminal I.
(4) Connect negative (-) multimeter lead to a known good ground.
(5) Set MAIN POWER switch to ON position (TM 10-3930-669-10).
(6) Set engine switch to ignition position (TM 10-3930-669-10).
  (a) If there are not 22 to 24 vdc present, repair gauge wire 5 (see schematic Appendix F) and go to Step 3 of this Fault.
  (b) If there are 22 to 24 vdc present, gauge wire 5 is OK.
(7) Set MAIN POWER switch to OFF position.
(8) Set engine switch to off position.

CONTINUITY TEST

(1) Set multimeter select switch to OHMS.
(2) Check continuity between transmission temperature gauge, terminal G and a known good ground.
  (a) If there is no continuity, repair gauge ground wire (see schematic Appendix F).
  (b) If there is continuity, gauge ground wire is OK.

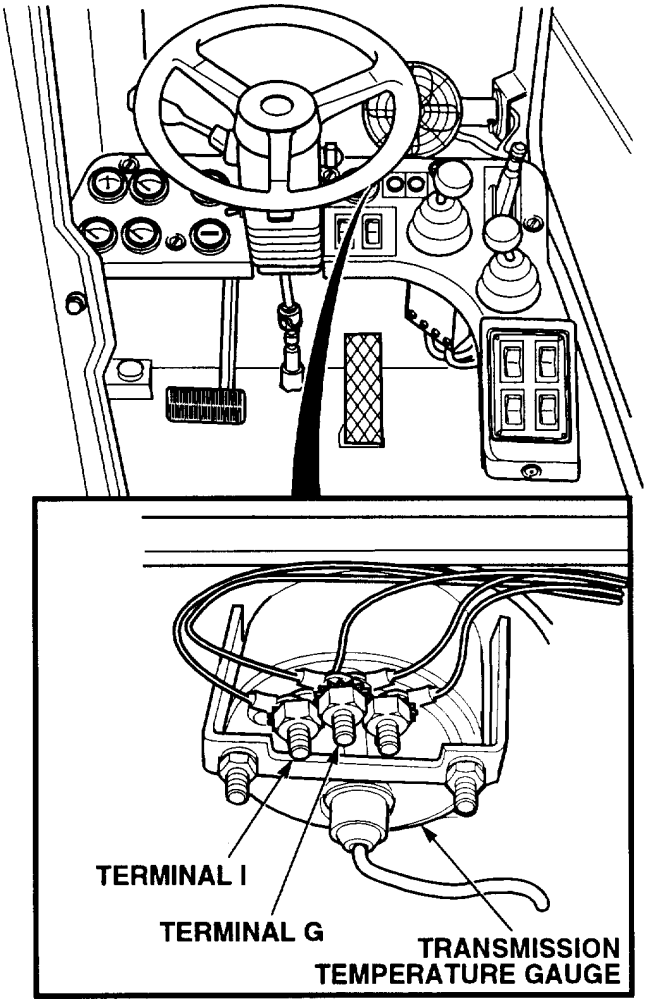

www.truck-freeworkshop.com

4. TRANSMISSION TEMPERATURE GAUGE GIVES NO OR INCORRECT READING (CONT).

KNOWN INFO
All other gauges operate. Transmission temperature sensor OK. Gauge wire 5 OK. Gauge ground wire OK.
POSSIBLE PROBLEMS
Wire 15 faulty. Transmission temperature gauge faulty.

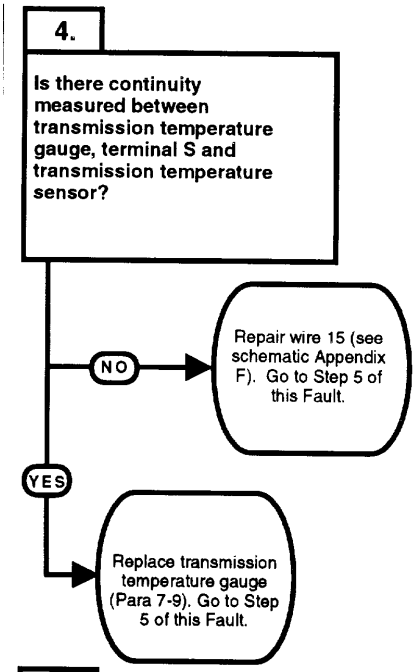

TEST OPTIONS
Continuity test. STE/ICE-R #91.
REASON FOR QUESTION
If continuity is not present , wire 15 is faulty.

KNOWN INFO
All other gauges operate. Transmission temperature sensor OK. Gauge wire 5 OK. Gauge ground wire OK. Wire 15 OK. Transmission temperature gauge OK.
POSSIBLE PROBLEMS

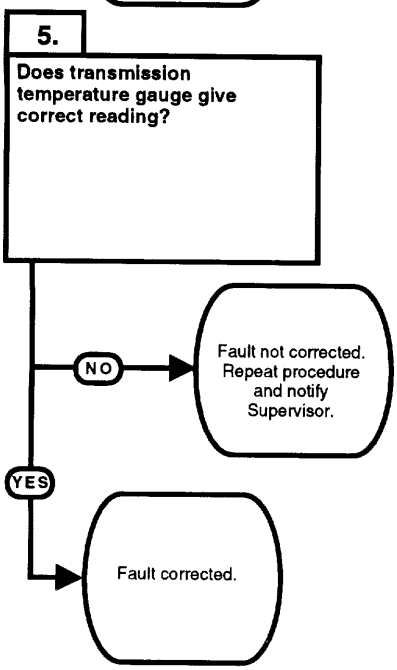

TEST OPTIONS
Verify repair.
REASON FOR QUESTION
If transmission temperature gauge gives correct reading, fault has been corrected.

www.truck-freeworkshop.com

CONTINUITY TEST

(1) Remove floor plate (Para 15-12).
(2) Set multimeter select switch to OHMS.
(3) Ground wire 15 at transmission temperature sensor.
(4) Check continuity between transmission temperature gauge, terminal S and a known good ground.
  (a) If there is no continuity, repair wire 15 (see schematic Appendix F).
  (b) If there is continuity replace transmission temperature gauge (Para 7-9) and go to Step 5 of this Fault.
(5) Install instrument panel (Para 7-8).

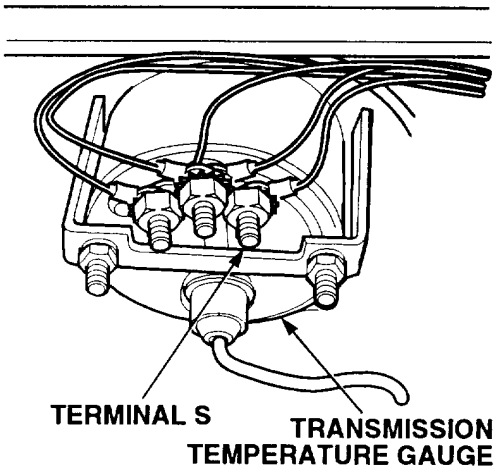

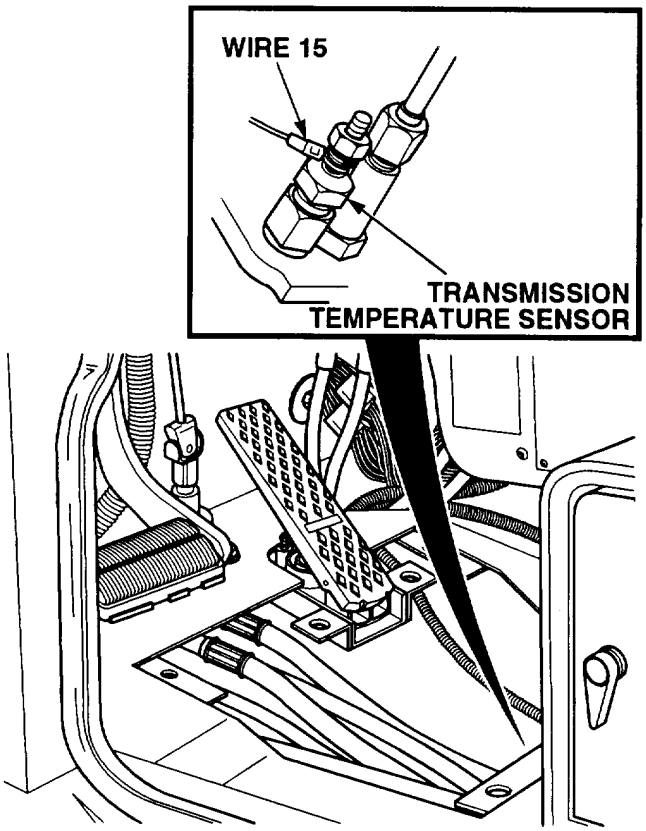

VERIFY REPAIR

(1) Start engine (TM 10-3930-669-10).
(2) Observe transmission temperature gauge.
  (a) If gauge does not give correct reading, fault not corrected. Perform Step (3) below. Repeat procedure and notify Supervisor.
  (b) If gauge gives correct reading, fault corrected.
(3) Shut down engine.

www.truck-freeworkshop.com

2-14. ELECTRICAL SYSTEM TROUBLESHOOTING (CONT).

5. ALL GAUGES DO NOT OPERATE.

INITIAL SETUP

Tools and Special Tools
Tool Kit, General Mechanic's: Automotive (Item 1, Appendix B)
Multimeter (Item 2, Appendix B)
STE/ICE-R (Optional) (Item 14, Appendix B)

Equipment Condition
Engine OFF (TM 10-3930-669-10)
MAIN POWER switch OFF (TM 10-3930-669-10)
Parking brake applied (TM 10-3930-669-10)
Wheels chocked (TM 10-3930-669-10)

References
TM 10-3930-669-10

KNOWN INFO
24 vdc circuits operate.
POSSIBLE PROBLEMS
Fuse 7 faulty. Wire 5 faulty.

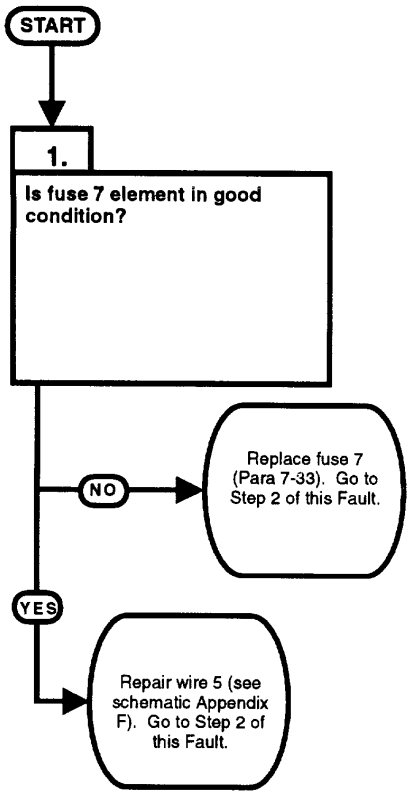

TEST OPTIONS
Visual test.
REASON FOR QUESTION
If element is broken, fuse 7 is faulty. If fuse 7 is OK, wire 5 is faulty.

www.truck-freeworkshop.com

VISUAL TEST
(1) Remove fuse 7 (Para 7-33). (2) Check element across fuse 7. (a) If element is broken, replace fuse 7. (b) If element is not broken, repair wire 5 (see schematic Appendix F). (3) Install fuse 7.

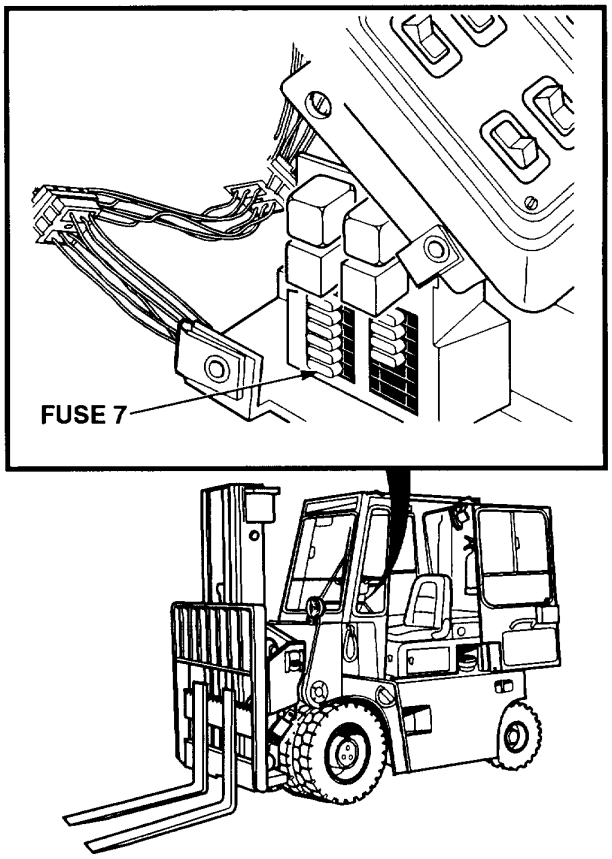

www.truck-freeworkshop.com

5. ALL GAUGES DO NOT OPERATE (CONT).

KNOWN INFO
24 vdc circuits operate. Fuse 7 OK. Wire 5 OK.
POSSIBLE PROBLEMS

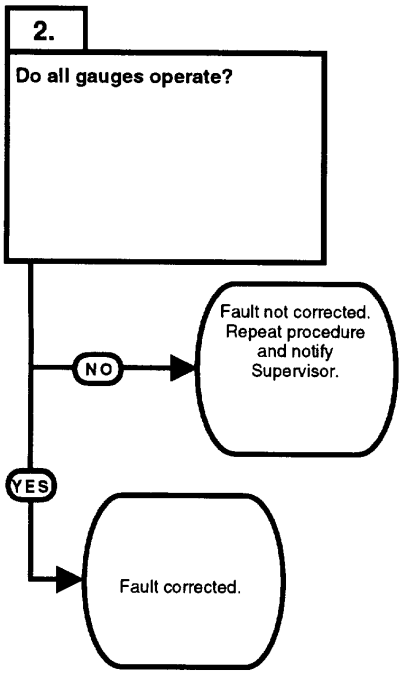

TEST OPTIONS
Verify repair.
REASON FOR QUESTION
If all gauges operate, fault has been corrected.

www.truck-freeworkshop.com

VERIFY REPAIR

(1) Start engine (TM 10-3930-669-10).
(2) Observe all gauges.
    (a) If all gauges do not operate, fault not corrected. Perform Step (3) below. Repeat procedure and notify Supervisor.
    (b) If all gauges operate, fault corrected.
(3) Shut down engine.

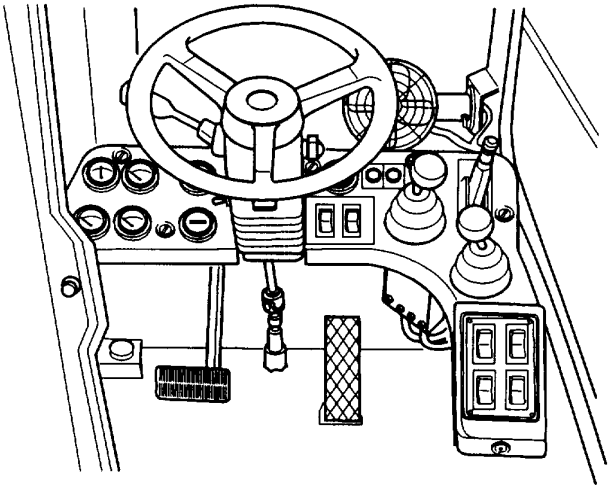

www.truck-freeworkshop.com

2-14. ELECTRICAL SYSTEM TROUBLESHOOTING (CONT).

6. HOUR METER DOES NOT OPERATE.

INITIAL SETUP

Tools and Special Tools
Tool Kit, General Mechanic's: Automotive (Item 1, Appendix B)
Multimeter (Item 2, Appendix B)
STE/ICE-R (Optional) (Item 14, Appendix B)

Equipment Condition
Engine OFF (TM 10-3930-669-10)
MAIN POWER switch OFF (TM 10-3930-669-10)
Parking brake applied (TM 10-3930-669-10)
Wheels chocked (TM 1 0-3930-669-10)

References
TM 10-3930-669-10

KNOWN INFO
All 24 vdc circuits operate.
POSSIBLE PROBLEMS
Wire 5 faulty. Hour meter ground wire faulty. Hour meter faulty. Wire 64 faulty. Alternator faulty.

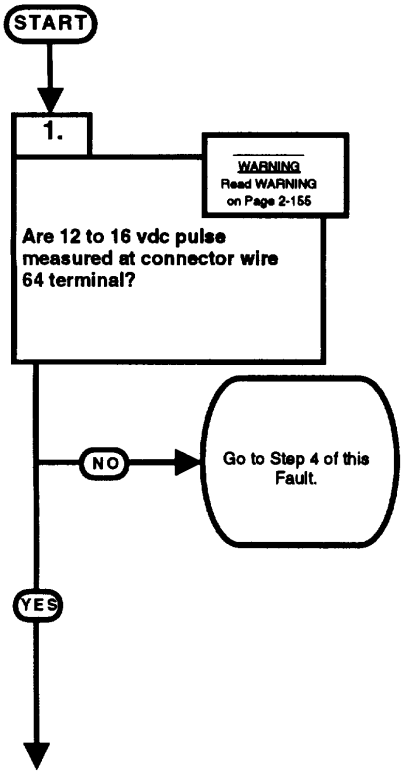

TEST OPTIONS
Voltage test STE/ICE-R #89.
REASON FOR QUESTION
This question eliminates a possible problem or group of possible problems determining where troubleshooting continues.

www.truck-freeworkshop.com

WARNING

Remove all jewelry such as rings, dog tags, bracelets, etc. If jewelry contacts battery terminal, a direct short may result in instant heating of tools, damage to equipment, and injury or death to personnel.

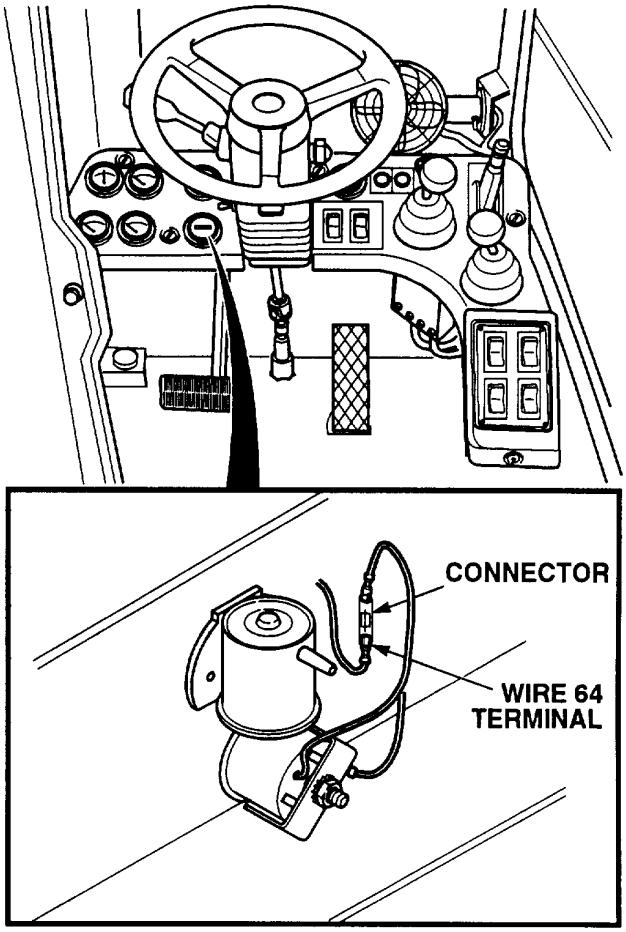

VOLTAGE TEST
(1) Remove instrument panel (Para 78). (2) Set multimeter select switch to VOLTS DC. (3) Connect positive (+) multimeter lead to connector wire 64 terminal. (4) Connect negative (-) multimeter lead to a known good ground. (5) Start engine (TM 10-3930-669-10). (a) If there are not 12 to 16 vdc present, perform Step (6) below and go to Step 4 of this Fault. (b) If there are 12 to 16 vdc present, perform Step (6) below and go to Step 2 of this Fault. (6) Shut down engine.

www.truck-freeworkshop.com

6. HOUR METER DOES NOT OPERATE (CONT).

KNOWN INFO
All 24 vdc circuits operate.
POSSIBLE PROBLEMS
Wire 5 faulty. Hour meter ground wire faulty. Hour meter faulty. Wire 64 faulty. Alternator faulty.

2.

WARNING
Read WARNING on Page 2-157

Are 22 to 24 vdc measured at hour meter, terminal (+)?

NO → Repair wire 5 (see schematic Appendix F). Go to Step 6 of this Fault.

YES ↓

TEST OPTIONS
Voltage test. STE/ICE-R #89.
REASON FOR QUESTION
If 22 to 24 vdc are not present, wire 5 is faulty.

KNOWN INFO
All 24 vdc circuits operate. Wire 5 OK.
POSSIBLE PROBLEMS
Hour meter ground wire faulty. Hour meter faulty. Wire 64 faulty. Alternator faulty.

3.

Is continuity measured between hour meter, terminal (–) and a known good ground?

NO → Replace hour meter ground wire. Go to Step 6 of this Fault.

YES → Replace hour meter (Para 7-10). Go to Step 6 of this Fault.

TEST OPTIONS
Continuity test. STE/ICE-R #91.
REASON FOR QUESTION
If continuity is not present, hour meter ground wire is faulty. If hour meter ground wire is OK, hour meter is faulty.

www.truck-freeworkshop.com

WARNING

Remove all jewelry such as rings, dog tags, bracelets, etc. If jewelry contacts battery terminal, a direct short may result in instant heating of tools, damage to equipment, and injury or death to personnel.

VOLTAGE TEST

(1) Set multimeter select switch to VOLTS DC.
(2) Connect positive (+) multimeter lead to hour meter, terminal (+).
(3) Connect negative (-) multimeter lead to a known good ground.
(4) Set MAIN POWER switch to ON position (TM 10-3930-669-10).
(5) Set engine switch to ignition position (TM 10-3930-669-10).
  (a) If there are not 22 to 24 vdc present, repair wire 65 (See schematic Appendix F).
  (b) If there are 22 to 24 vdc present, wire 65 is OK.
(6) Set engine switch to off position.
(7) Set MAIN POWER switch to OFF position.

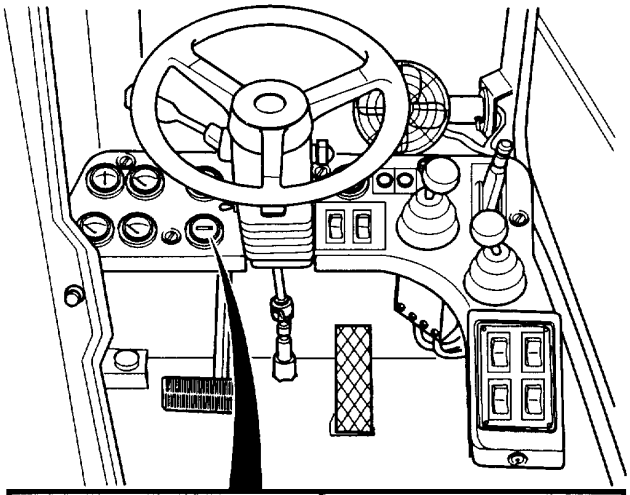

CONTINUITY TEST

(1) Set multimeter select switch to OHMS.
(2) Check continuity between hour meter, terminal (-) and a known good ground.
  (a) If there is no continuity, replace hour meter ground wire.
  (b) If there is continuity, replace hour meter (Para 7-10).
(3) Install instrument panel (Para 7-8).

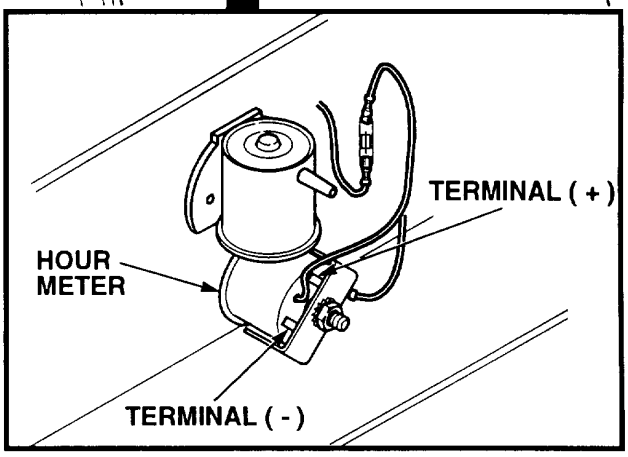

www.truck-freeworkshop.com

6. HOUR METER DOES NOT OPERATE (CONT).

KNOWN INFO
All 24 vdc circuits operate. Wire 5 OK. Hour meter ground wire OK Hour meter OK.
POSSIBLE PROBLEMS
Wire 64 faulty. Alternator faulty.

TEST OPTIONS
Continuity test. STE/ICE-R #91.
REASON FOR QUESTION
If continuity is not present , wire 64 is faulty.

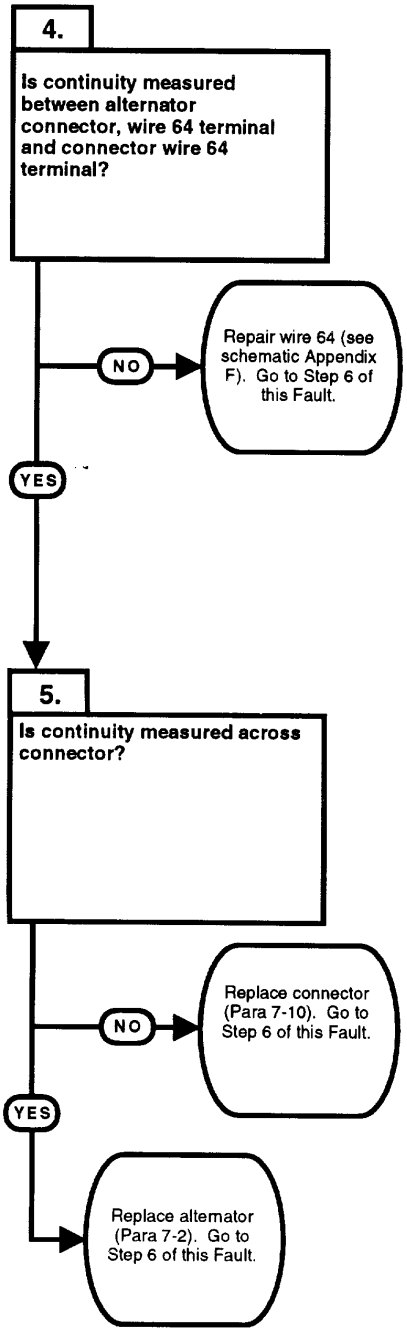

KNOWN INFO
All 24 vdc circuits operate. Wire 5 OK. Hour meter ground wire OK. Hour meter OK. Wire 64 OK.
POSSIBLE PROBLEMS
Alternator faulty.

TEST OPTIONS
Continuity test. STE/CE-R #91.
REASON FOR QUESTION
If continuity is not present, resistor is faulty. If resistor is not faulty, pulse tach in alternator is faulty.

www.truck-freeworkshop.com

CONTINUITY TEST

(1) Remove engine ventilation panel (Para 6-2).
(2) Disconnect alternator connector from harness connector.
(3) Ground alternator connector, wire 64 terminal to a known good ground.
(4) Set multimeter select switch to OHMS.
(5) Check continuity between connector wire 64 terminal and a known good ground.
  (a) If there is no continuity, repair wire 64 (see schematic Appendix F).
  (b) If there is continuity, wire 64 is OK.
(6) Connect alternator connector on harness connector.
(7) Install engine ventilation panel.

CONTINUITY TEST

(1) Disconnect connector from wire 64 and hour meter wire.
(2) Connect positive (+) multimeter lead to connector wire 64 terminal.
(3) Connect negative (-) multimeter lead to connector terminal.
  (a) If there is no continuity, replace connector (Para 7-10).
  (b) If there is continuity, replace alternator (Para 7-2).
(4) Connect wire 64 and hour meter wire to connector.
(5) Install instrument panel (Para 7-8).

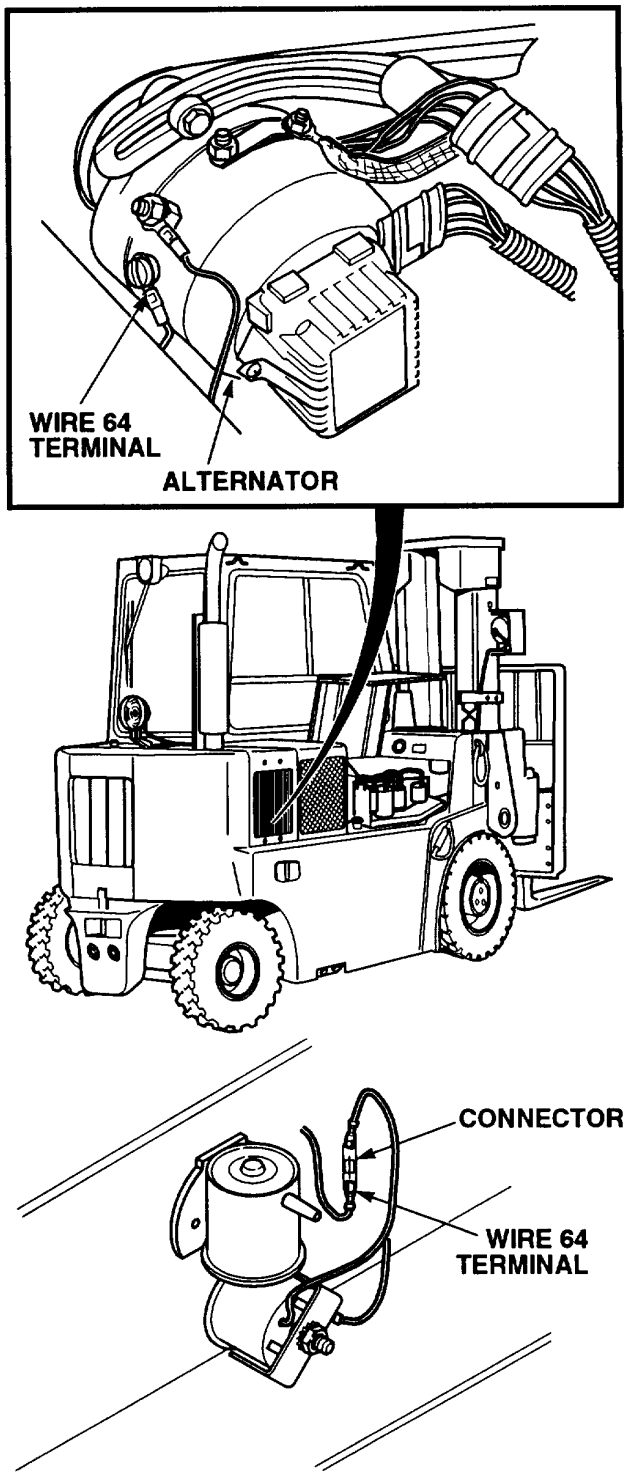

www.truck-freeworkshop.com

6. HOUR METER DOES NOT OPERATE (CONT).

KNOWN INFO
All 24 vdc circuits operate. Wire 5 OK. Hour meter ground wire OK. Hour meter OK. Wire 64 OK. Alternator OK.
POSSIBLE PROBLEMS

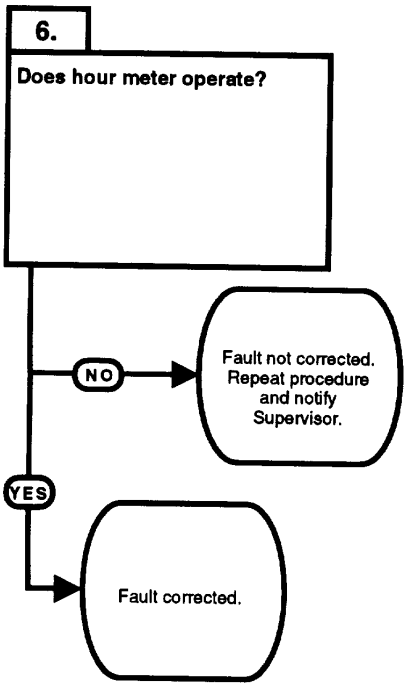

TEST OPTIONS
Verify repair.
REASON FOR QUESTION
If hour meter operates, fault has been corrected.

www.truck-freeworkshop.com

VERIFY REPAIR

(1) Start engine (TM 10-3930-669-10).
(2) Observe hour meter.
  (a) If hour meter does not turn every 1/10 of an hour, fault not corrected. Perform Step (3) below. Repeat procedure and notify Supervisor.
  (b) If hour meter turns every 1/10 of an hour, fault corrected.
(3) Shut down engine.

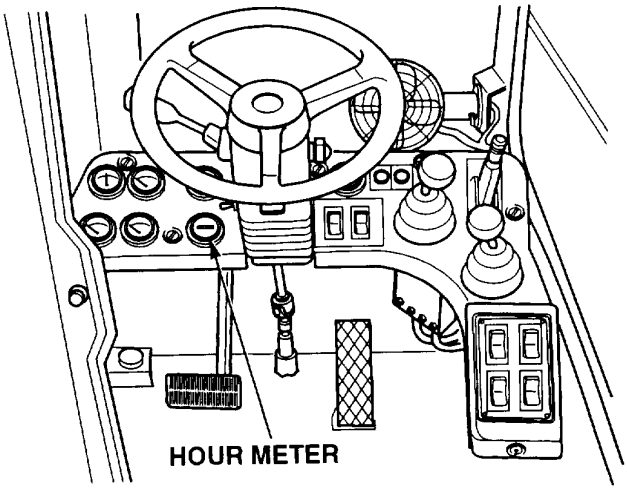

www.truck-freeworkshop.com

2-14. ELECTRICAL SYSTEM TROUBLESHOOTING (CONT).

7. TAILLIGHTS, FRONT LIGHT, GAUGE LIGHTS, AND MAST LIGHT DO NOT OPERATE.

INITIAL SETUP

Tools and Special Tools
Tool Kit, General Mechanic's: Automotive (Item 1, Appendix B)
Multimeter (Item 2, Appendix B)
STE/ICE-R (Optional) (Item 14, Appendix B)

Equipment Condition
Engine OFF (TM 10-3930-669-10)
MAIN POWER switch OFF (TM 10-3930-669-10)
Parking brake applied (TM 10-3930-669-10)
Wheels chocked (TM 10-3930-669-10)

References
TM 10-3930-669-10

KNOWN INFO
Cab interior lights operate.
POSSIBLE PROBLEMS
Fuse 6 faulty. Wire 25A faulty. Front light switch faulty.

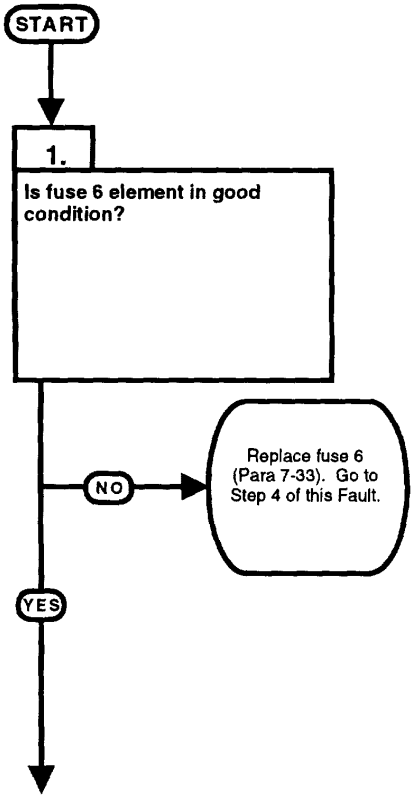

TEST OPTIONS
Visual test.
REASON FOR QUESTION
If element is broken, fuse 6 is faulty.

www.truck-freeworkshop.com

VISUAL TEST
(1) Remove fuse 6 (Para 7-33). (2) Check element across fuse. (a) If there is a break, replace fuse 6. (b) If there is not a break, fuse 6 is OK. (4) Install fuse 6.

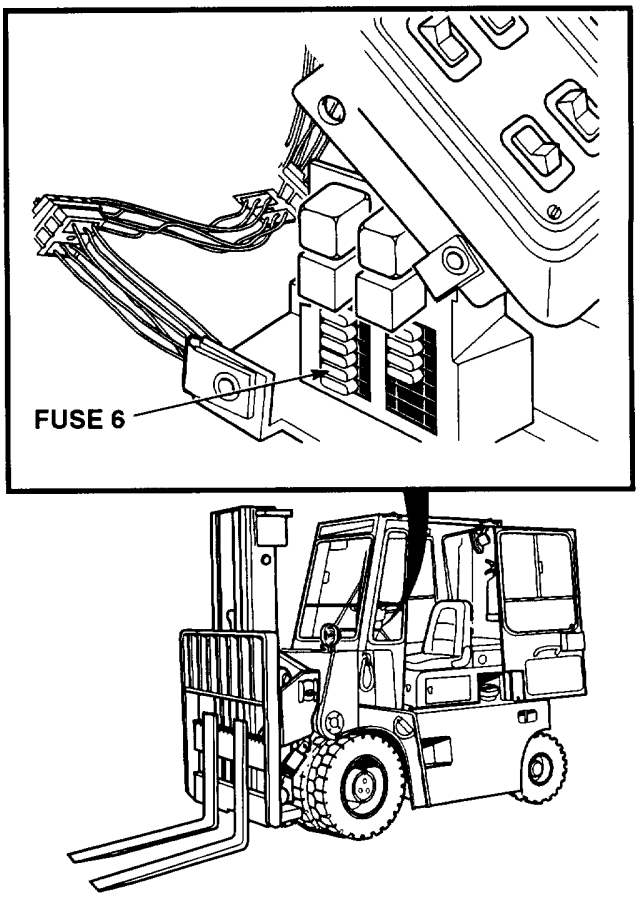

www.truck-freeworkshop.com

7. TAILLIGHTS, FRONT LIGHT, GAUGE LIGHTS, AND MAST LIGHT DO NOT OPERATE (CONT).

KNOWN INFO
Cab interior lights operate. Fuse 6 OK.
POSSIBLE PROBLEMS
Wire 25A faulty. Front light switch faulty.

TEST OPTIONS
Voltage test. STE/ICE-R #89.
REASON FOR QUESTION
If 22 to 24 vdc are not present , wire 25A is faulty.

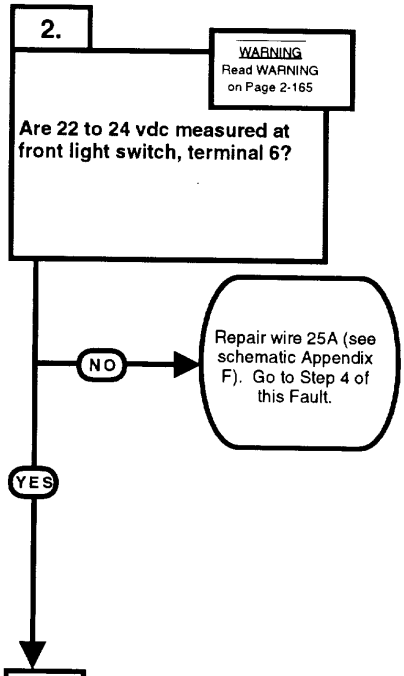

KNOWN INFO
Cab interior lights operate. Fuse 6 OK. Wire 25A OK.
POSSIBLE PROBLEMS
Front light switch faulty.

TEST OPTIONS
Continuity test. STE/ICE-R #91.
REASON FOR QUESTION
If continuity is not present , switch is faulty.

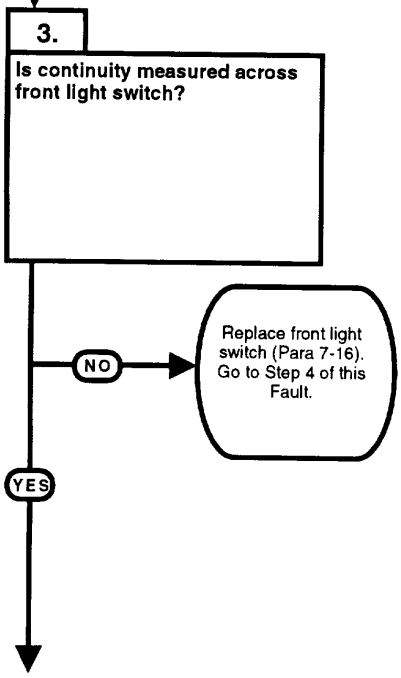

www.truck-freeworkshop.com

WARNING

Remove all jewelry such as rings, dog tags, bracelets, etc. If jewelry contacts battery terminal, a direct short may result in instant heating of tools, damage to equipment, and injury or death to personnel.

VOLTAGE TEST

(1) Remove front light switch (Para 7-16).
(2) Set multimeter select switch to VOLTS DC.
(3) Connect positive (+) multimeter lead to front light switch, terminal 6.
(4) Connect negative (-) multimeter lead to a known good ground.
(5) Set MAIN POWER switch to ON position (TM 10-3930-669-10).
(6) Set engine switch to ignition position (TM 10-3930-669-10).
  (a) If there are not 22 to 24 vdc present, repair wire 25A (see schematic Appendix F).
  (b) If there are 22 to 24 vdc present, wire 25A is OK.
(7) Set engine switch to off position.
(8) Set MAIN POWER switch to OFF position.

CONTINUITY TEST

(1) Set multimeter select switch to OHMS.
(2) Set front light switch to MAST position (TM 10-3930-669-10).
(3) Check continuity between front light switch, terminals 2 and 6.
(a) If there is no continuity, replace front light switch.
(b) If there is continuity, go to Step (4) below.
(4) Set front light switch to FRONT position.
(5) Check continuity between front light switch, terminals 2 and 3.
(a) If there is no continuity, replace front light switch.
(b) If there is continuity, front light switch is OK.
(6) Install front light switch (Para 7-16).

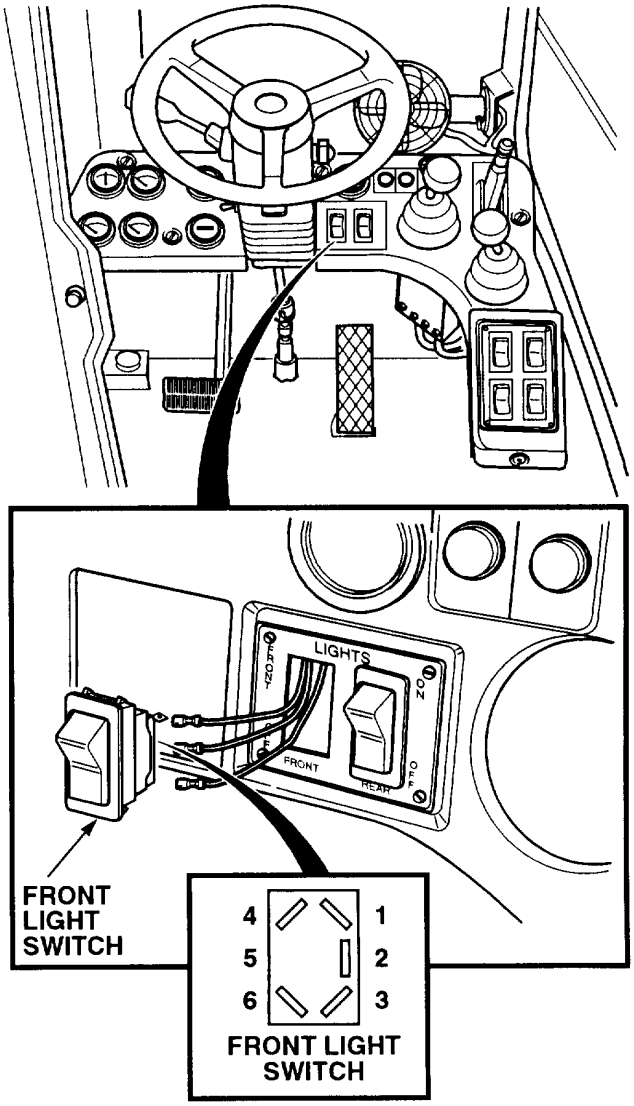

www.truck-freeworkshop.com

7. TAILLIGHTS, FRONT LIGHT, GAUGE LIGHTS, AND MAST LIGHT DO NOT OPERATE (CONT).

KNOWN INFO
Cab interior lights operate. Fuse 6 OK. Wire 25A OK. Front light switch OK.
POSSIBLE PROBLEMS

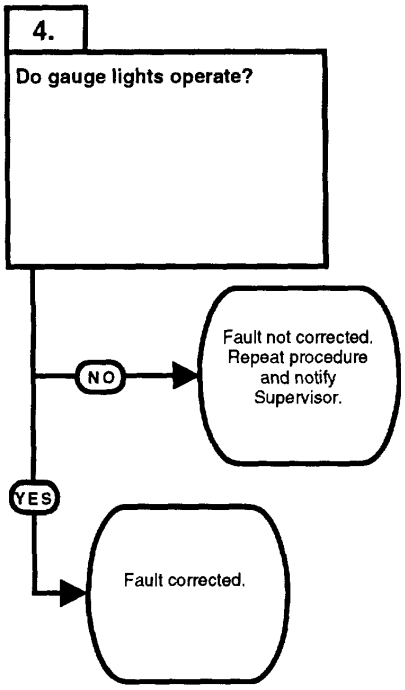

TEST OPTIONS
Verify repair.
REASON FOR QUESTION
If front lights, taillight, gauge lights, and MAST LIGHT operate, fault has been corrected.

www.truck-freeworkshop.com

VERIFY REPAIR

(1) Set MAIN POWER switch to ON position (TM 10-3930-669-10).
(2) Set engine switch to ignition position (TM 10-3930-669-10).
(3) Set front light switch to ON position (TM 10-3930-669-10).
(4) Observe gauge lights
  (a) If all lights do not operate, perform Steps (5) through (7) below. Repeat procedure and notify Supervisor.
  (b) If all lights operate, fault corrected.
(5) Set front light switch to OFF position.
(6) Set engine switch to off position
(7) Set MAIN POWER switch to OFF position.

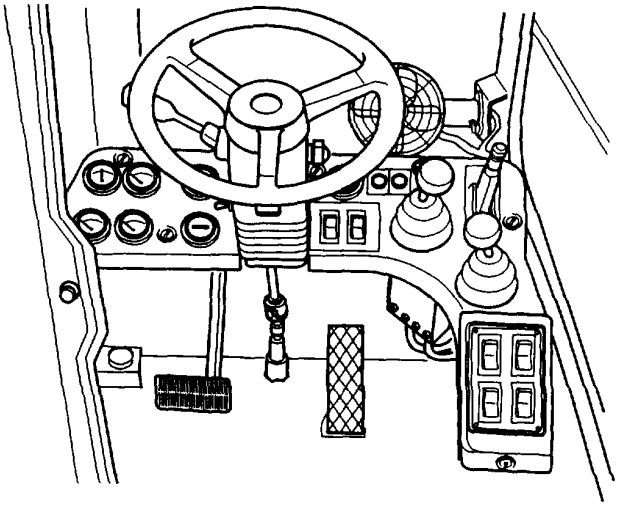

www.truck-freeworkshop.com

2-14. ELECTRICAL SYSTEM TROUBLESHOOTING (CONT).

8. REAR LIGHT(S) DOES NOT OPERATE.

INITIAL SETUP

Tools and Special Tools
Tool Kit, General Mechanic's: Automotive (Item 1, Appendix B)
Multimeter (Item 2, Appendix B)
STE/ICE-R (Optional) (Item 14, Appendix B)

References
TM 10-3930-669-10

Equipment Condition
Engine OFF (TM 10-3930-669-10)
MAIN POWER switch OFF (TM 10-3930-669-10)
Parking brake applied (TM 10-3930-669-10)
Wheels chocked (TM 10-3930-669-10)

NOTE

The following procedure covers the rear lights, but the general steps can apply for the front and mast lights.

KNOWN INFO
24 vdc circuits operate.
POSSIBLE PROBLEMS
Light lamp faulty. Light lead faulty. Wire 24 faulty. Fuse 8 faulty. Wire 24A faulty. Rear light switch faulty.

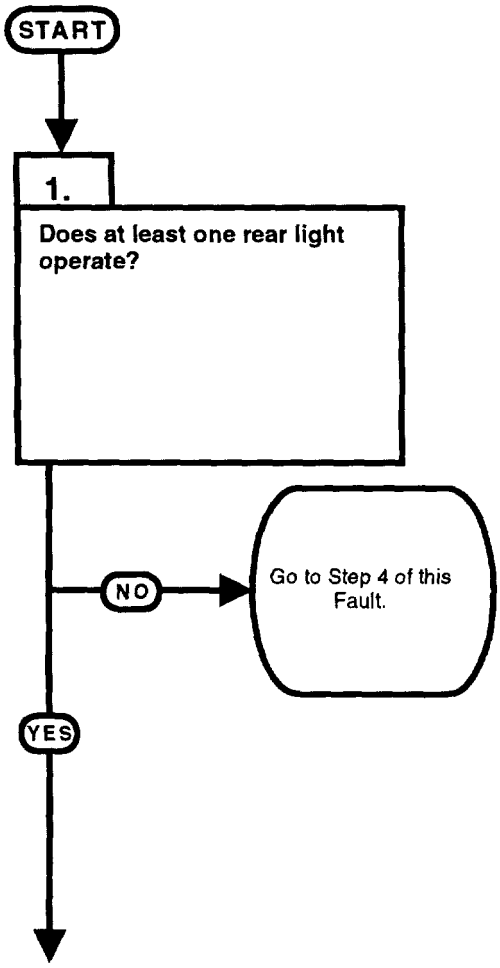

TEST OPTIONS
Visual inspection.
REASON FOR QUESTION
This question eliminates a possible problem or group of possible problems determining where troubleshooting continues.

www.truck-freeworkshop.com

VISUAL INSPECTION
(1) Set MAIN POWER switch to ON position (TM 10-3930-669-10). (2) Set engine switch to ignition position (TM 10-3930-669-10). (3) Set rear light switch to ON position (TM 10-3930-669-10). (4) Observe rear light. (a) If rear light fails to operate, perform Steps (5) through (7) below and go to Step 4 of this Fault. (b) If rear light operates, perform Steps (5) through (7) below and go to Step 2 of this Fault. (5) Set rear light switch to OFF position. (6) Set engine switch to off position. (7) Set MAIN POWER switch to OFF position.

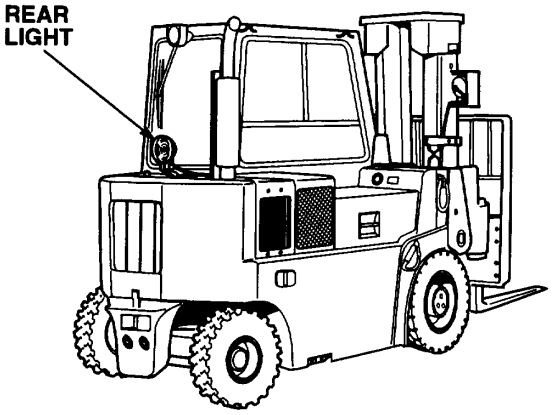

www.truck-freeworkshop.com

8. REAR LIGHT(S) DOES NOT OPERATE (CONT).

KNOWN INFO
24 vdc circuits operate. Fuse 8 OK. Wire 24A OK. Rear light switch OK.
POSSIBLE PROBLEMS
Light lamp faulty. Light lead faulty. Wire 24 faulty.

2.

Is there continuity across suspect lamp?

NO → Replace light lamp (Para 7-26). Go to Step 5 of this Fault.

YES ↓

TEST OPTIONS
Continuity test, STE/ICE-R #91.
REASON FOR QUESTION
If continuity is not present, lamp is faulty.

KNOWN INFO
24 vdc circuits operate. Fuse 8 OK. Wire 24A OK. Rear light switch OK. Light lamp OK.
POSSIBLE PROBLEMS
Light lead faulty. Wire 24 faulty.

3.

Is continuity measured between light socket and light connector?

NO → Replace light lead (Para 7-29). Go to Step 5 of this Fault.

YES → Repair wire 24 (see schematic Appendix F). Go to Step 6 of this Fault.

TEST OPTIONS
Continuity test. STE/ICE-R #91.
REASON FOR QUESTION
If continuity is not present, light lead is faulty. If light lead is OK, wire 24 is faulty.

www.truck-freeworkshop.com

CONTINUITY TEST

(1) Remove suspect lamp (Para 7-26).
(2) Set multimeter select switch to OHMS.
(3) Check continuity between terminals of lamp.
  (a) If there is no continuity, replace lamp.
  (b) If there is continuity, lamp is OK.

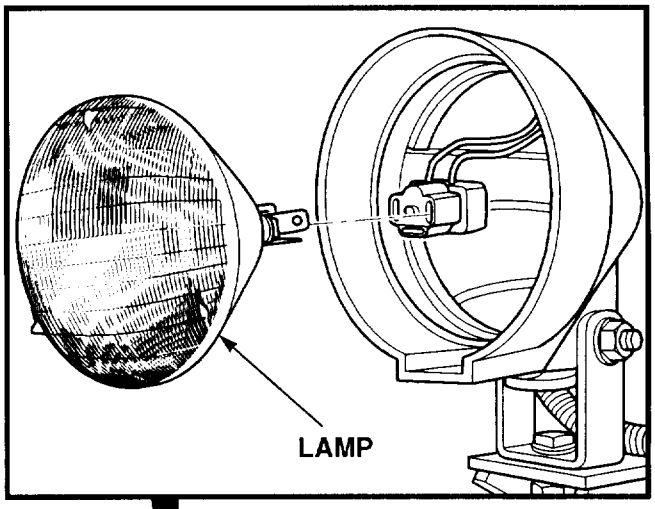

CONTINUITY TEST

(1) Remove heater housing cover (Para 16-8).
(2) Set multimeter select switch to OHMS.
(3) Check continuity between light socket red wire terminal and light connector, terminal 1.
  (a) If there is no continuity, replace light lead.
  (b) If there is continuity, go to Step (4) below.
(4) Check continuity between light socket black wire terminal and light connector, terminal 2.
  (a) If there is no continuity, replace light lead.
  (b) If there is continuity, repair wire 24 (see schematic Appendix F).
(5) Install heater housing cover.
(6) Install lamp (Para 7-26).

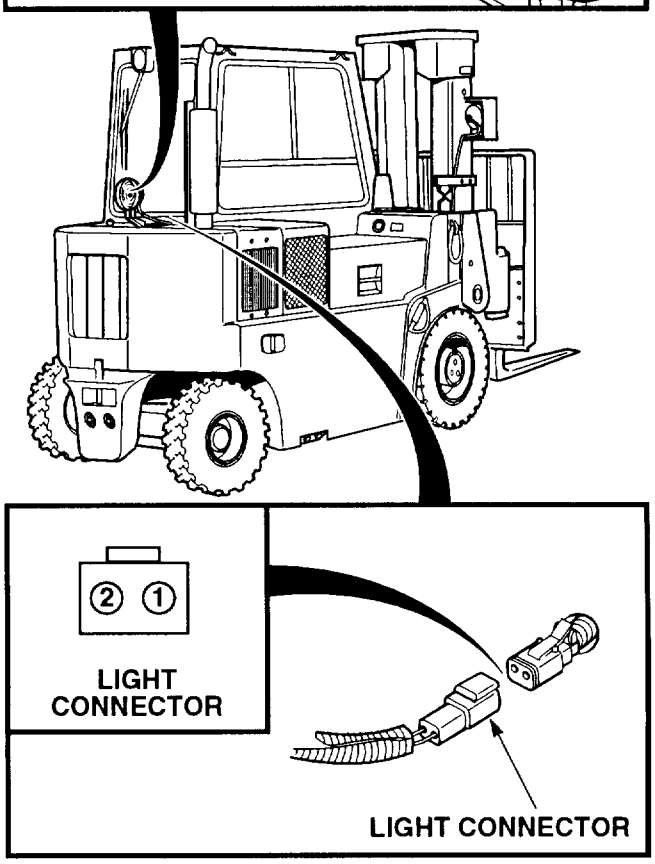

www.truck-freeworkshop.com

8. REAR LIGHT(S) DOES NOT OPERATE (CONT).

KNOWN INFO
24 vdc circuits operate. Light lamp OK. Light lead OK. Wire 24 OK. Fuse 8 OK.
POSSIBLE PROBLEMS
Wire 24A faulty. Rear light switch faulty.

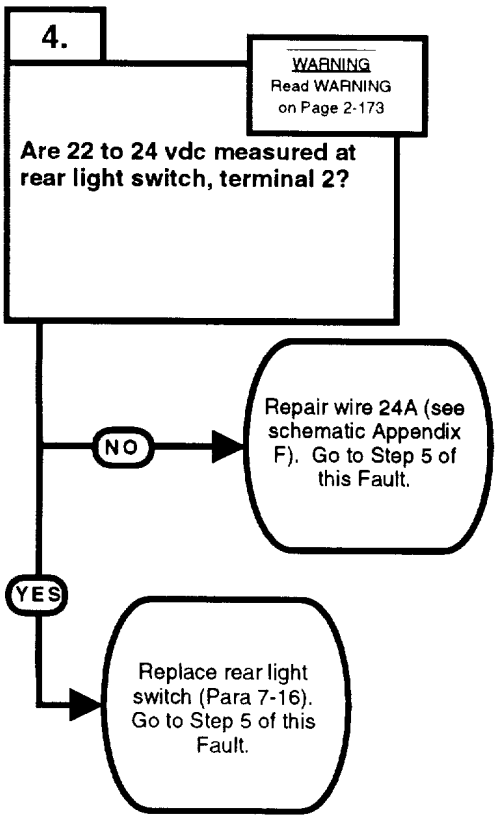

TEST OPTIONS
Voltage test. STE/ICE-R #89.
REASON FOR QUESTION
If 22 to 24 vdc are not present, wire 24A is faulty. If wire 24A is OK, rear lights switch is faulty.

www.truck-freeworkshop.com

WARNING

Remove all jewelry such as rings, dog tags, bracelets, etc. If jewelry contacts battery terminal, a direct short may result in instant heating of tools, damage to equipment, and injury or death to personnel.

VOLTAGE TEST

(1) Lift light switch from instrument panel (Para 7-16).
(2) Set multimeter select switch to VOLTS DC.
(3) Connect positive (+) multimeter lead to rear light switch, terminal 2 (4) Connect negative (-) multimeter lead to a known good ground.
(5) Set MAIN POWER switch to ON position (TM 10-3930-669-10).
(6) Set engine switch to ignition position (TM 10-3930-669-10).
(7) Set rear light switch to ON position (TM 10-3930-669-10).
  (a) If there are not 22 to 24 vdc present, perform Steps (8) through (10) below and repair wire 24A (see schematic Appendix F).
  (b) If there are 22 to 24 vdc present, perform Steps (8) through (10) below and replace rear light switch (Para 7-16).
(8) Set engine switch to off position.
(9) Set MAIN POWER switch to OFF position.
(10) Set rear light switch to OFF position.

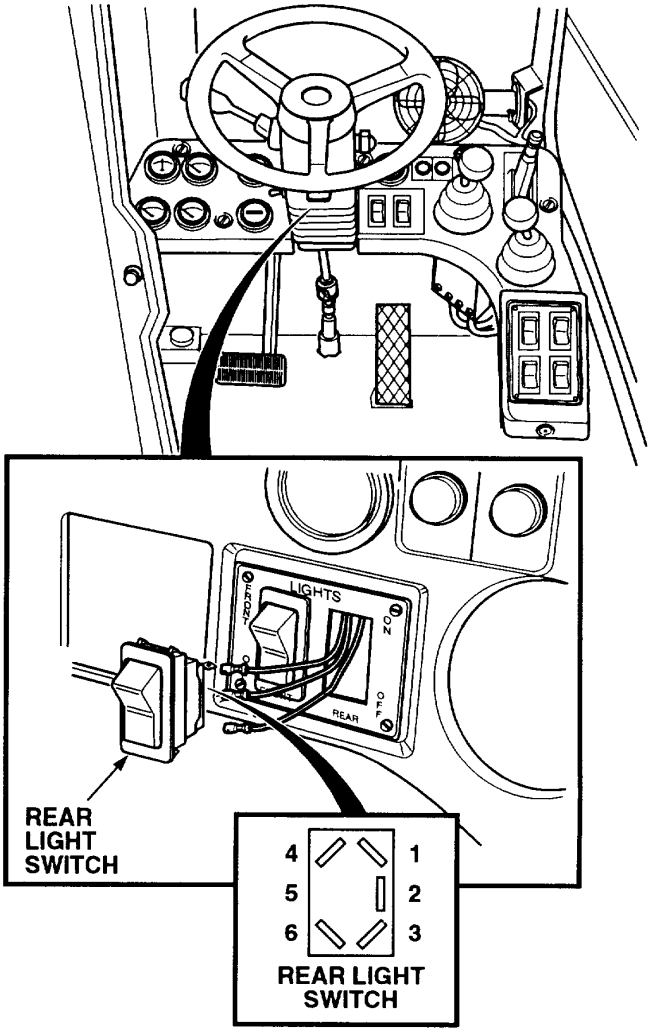

www.truck-freeworkshop.com

8. REAR LIGHT(S) DOES NOT OPERATE (CONT).

KNOWN INFO
24 vdc circuits operate. Light lamp OK. Light lead OK. Wire 24 OK. Fuse 8 OK. Wire 24A OK. Rear light switch OK.
POSSIBLE PROBLEMS

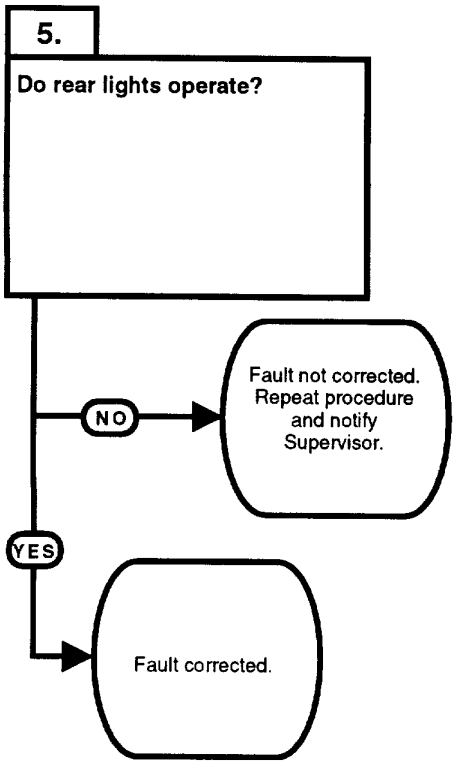

TEST OPTIONS
Verify repair.
REASON FOR QUESTION
If rear lights operate, fault has been corrected.

www.truck-freeworkshop.com

VERIFY REPAIR
(1) Set MAIN POWER switch to ON position (TM 10-3930-669-10). (2) Set engine switch to ignition position (TM 10-3930-669-10). (3) Set rear light switch to ON position and observe rear lights (TM 10-3930-669-10). (a) If rear lights do not operate, fault not corrected. Perform Steps (4) through (6) below. Repeat procedure and notify Supervisor. (b) If rear lights operate, fault corrected. (4) Set rear light switch to OFF position. (5) Set engine switch to off position (6) Set MAIN POWER switch to OFF position.

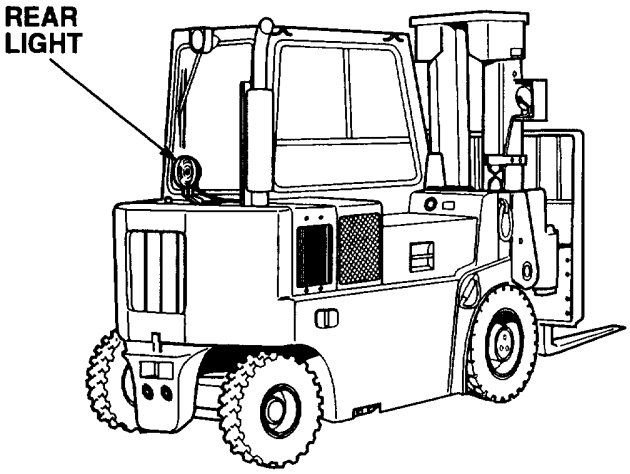

www.truck-freeworkshop.com

2-14. ELECTRICAL SYSTEM TROUBLESHOOTING (CONT).

9. TOP, FRONT, AND REAR WIPERS DO NOT OPERATE.

INITIAL SETUP

Tools and Special Tools
Tool Kit, General Mechanic's: Automotive (Item 1, Appendix B)
Multimeter (Item 2, Appendix B)
STE/ICE-R (Optional) (Item 14, Appendix B)

Equipment Condition
Engine OFF (TM 10-3930-669-10)
MAIN POWER switch OFF (TM 10-3930-669-10)
Parking brake applied (TM 10-3930-669-10)
Wheels chocked (TM 10-3930-669-10)

References
TM 10-3930-669-10

KNOWN INFO
24 vdc circuits operate.
POSSIBLE PROBLEMS
Fuse 11 faulty. Wire 37 faulty.

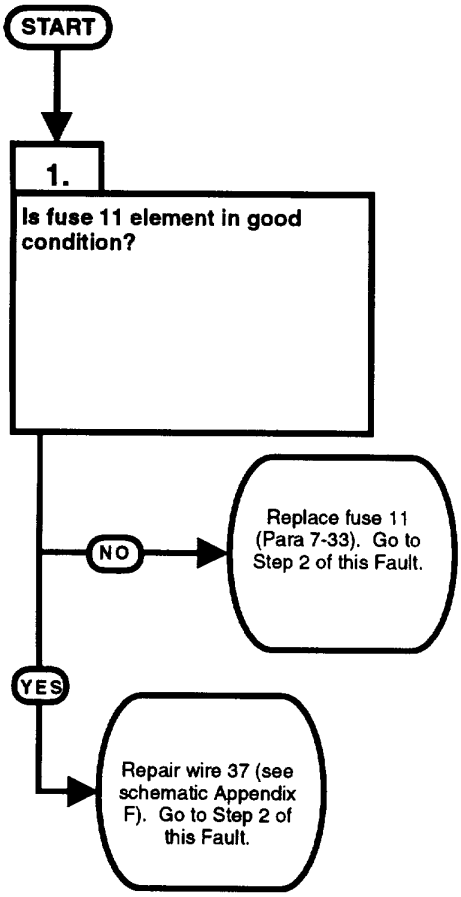

TEST OPTIONS
Voltage test. STE/ICE-R #89.
REASON FOR QUESTION
If element is broken, fuse 11 is faulty.

www.truck-freeworkshop.com

VISUAL TEST
(1) Remove fuse 11 (Para 7-33). (2) Check element across fuse. (a) If there is a break, replace fuse 11. (b) If there is not a break, fuse 11 is OK. (4) Install fuse 11.

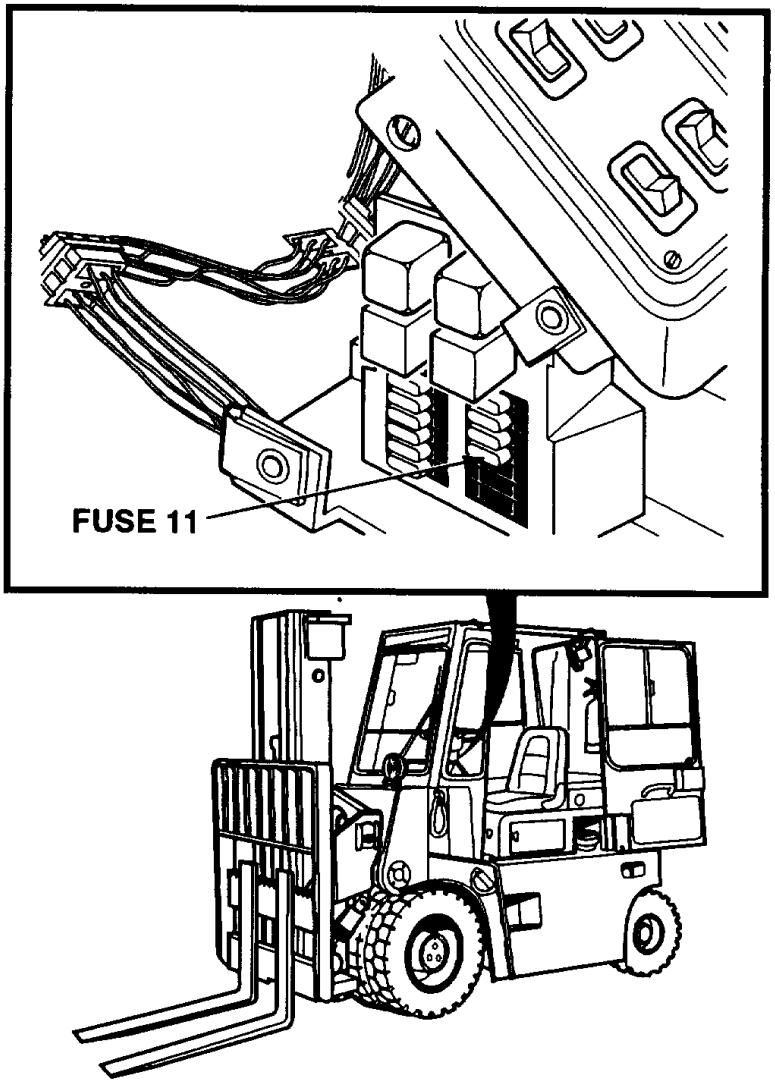

www.truck-freeworkshop.com

9. TOP, FRONT, AND REAR WIPERS DO NOT OPERATE (CONT).

KNOWN INFO
24 vdc circuits operate. Fuse 11 OK. Wire 37 OK.
POSSIBLE PROBLEMS

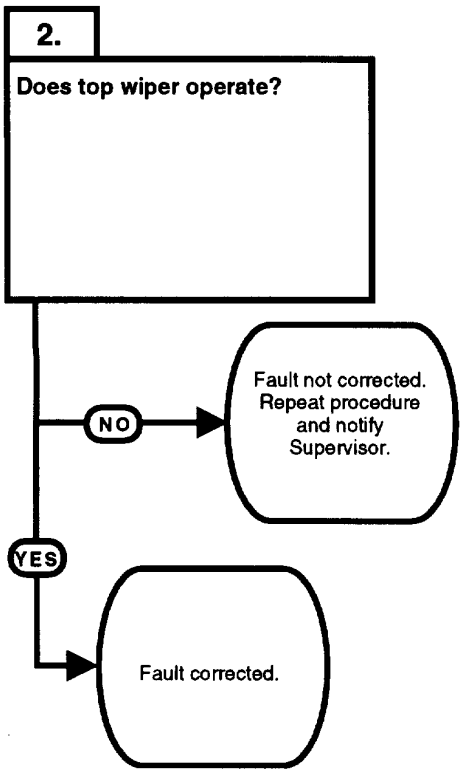

TEST OPTIONS
Verify repair.
REASON FOR QUESTION
If top wiper operates, fault has been corrected.

www.truck-freeworkshop.com

VERIFY REPAIR

(1) Set MAIN POWER switch to ON position (TM 10-3930-669-10).
(2) Set engine switch to ignition position (TM 10-3930-669-10).
(3) Set top wiper switch to ON position (TM 10-3930-669-10).
(4) Observe top wiper.
  (a) If top wiper does not operate, fault not corrected. Perform Steps (5) through (7) below. Repeat procedure and notify Supervisor.
  (b) If top wiper operates, fault corrected.
(5) Set top wiper switch to OFF position.
(6) Set engine switch to off position
(7) Set MAIN POWER switch to OFF position.

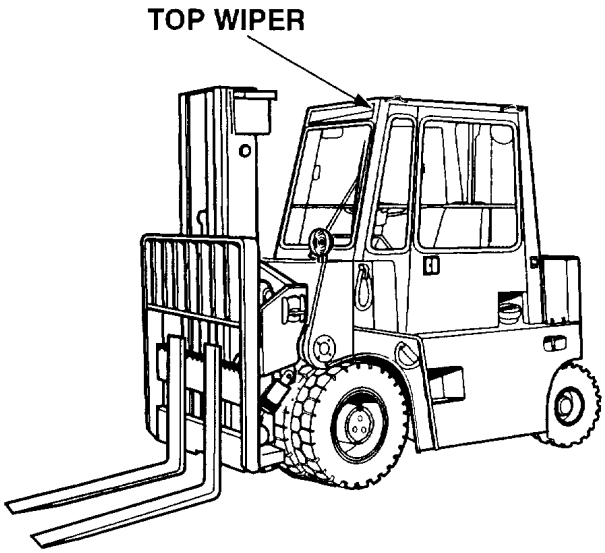

www.truck-freeworkshop.com

2-14. ELECTRICAL SYSTEM TROUBLESHOOTING (CONT).

10. REAR WIPER DOES NOT OPERATE.

INITIAL SETUP

Tools and Special Tools
Tool Kit, General Mechanic's: Automotive (Item 1, Appendix B)
Multimeter (Item 2, Appendix B)
STE/ICE-R (Optional) (Item 14, Appendix B)

Equipment Condition
Engine OFF (TM 10-3930-669-10)
MAIN POWER switch OFF (TM 10-3930-669-10)
Parking brake applied (TM 10-3930-669-10)
Wheels chocked (TM 10-3930-669-10)

References
TM 10-3930-669-10

NOTE
The following procedure covers the rear wiper, but the general steps can be used for the front or top wipers.

KNOWN INFO
24 vdc circuits operate. Top and front wiper operate.
POSSIBLE PROBLEMS
Lead wire 37 faulty. Rear wiper switch faulty. Rear wiper motor faulty.

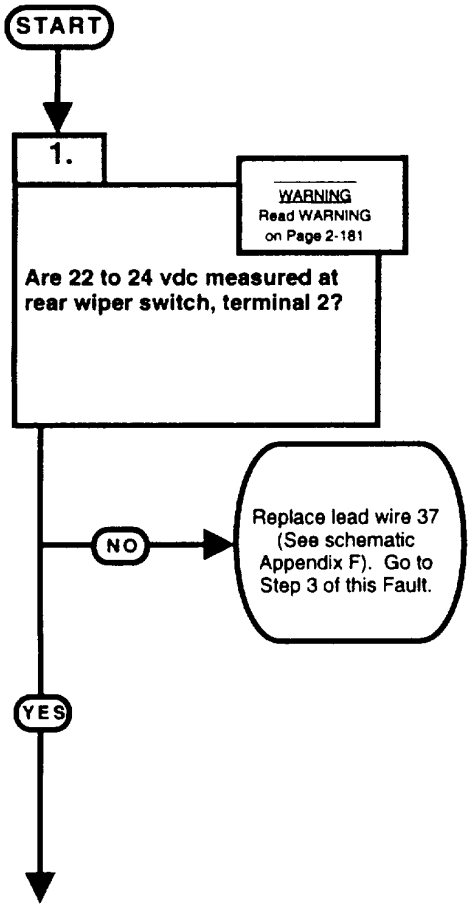

TEST OPTIONS
Voltage test. STE/ICE-R #89.
REASON FOR QUESTION
If 22 to 24 vdc are not present, lead wire 37 is faulty.

www.truck-freeworkshop.com

WARNING

Remove all jewelry such as rings, dog tags, bracelets, etc. If jewelry contacts battery terminal, a direct short may result in instant heating of tools, damage to equipment, and injury or death to personnel.

VOLTAGE TEST

(1) Remove rear wiper switch (Para 7-19).
(2) Set multimeter select switch to VOLTS DC.
(3) Connect positive (+) multimeter lead to rear wiper switch, lead wire 37 terminal.
(4) Connect negative (-) multimeter lead to a known good ground.
(5) Set MAIN POWER switch to ON position (TM 10-3930-669-10).
(6) Set engine switch to ignition position (TM 10-3930-669-10).
  (a) If there are not 22 to 24 vdc present, perform Steps (7) and (8) below and replace lead wire 37 (See Schematic Appendix F).
  (b) If there are 22 to 24 vdc present, lead wire 37 is OK.
(7) Set engine switch to off position.
(8) Set MAIN POWER switch to OFF position.

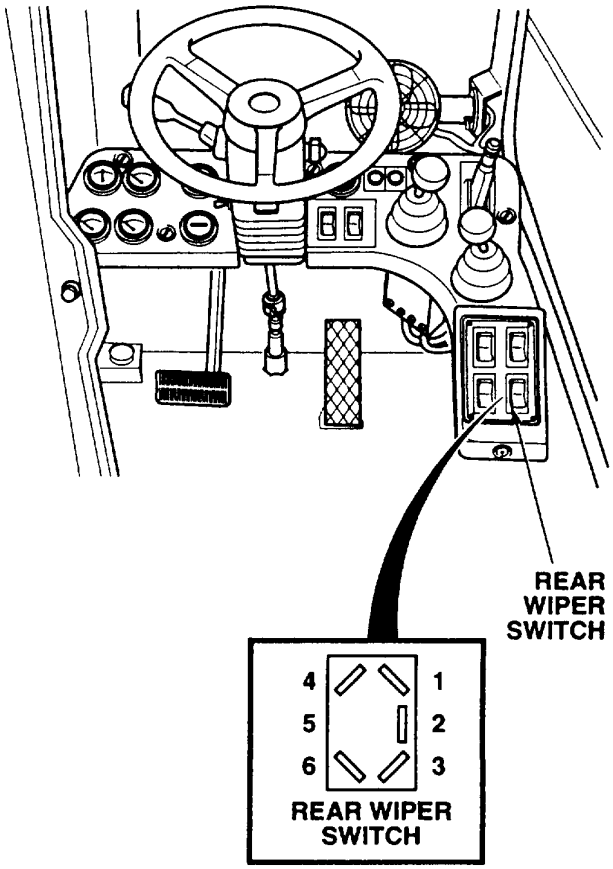

www.truck-freeworkshop.com

10. REAR WIPER DOES NOT OPERATE (CONT).

KNOWN INFO
24 vdc circuits operate. Lead wire 37 OK.
POSSIBLE PROBLEMS
Rear wiper switch faulty. Rear wiper motor faulty.

2.

Is continuity measured across rear wiper switch?

NO → Replace rear wiper switch (Para 7-19). Go to Step 3 of this Fault.

YES → Replace rear wiper motor (Para 16-3). Go to Step 3 of this Fault.

TEST OPTIONS
Continuity test. STE/ICE-R #91.
REASON FOR QUESTION
If continuity is not present, rear wiper switch is faulty. If rear wiper switch is OK, rear wiper motor is faulty.

KNOWN INFO
24 vdc circuits operate. Lead wire 37 OK. Rear wiper switch OK Rear wiper motor OK.
POSSIBLE PROBLEMS

3.

Does rear wiper operate?

NO → Fault not corrected. Repeat procedure and notify Supervisor.

YES → Fault corrected.

TEST OPTIONS
Verify repair.
REASON FOR QUESTION
If rear wiper operates, fault has been corrected.

www.truck-freeworkshop.com

WARNING

Remove all jewelry such as rings, dog tags, bracelets, etc. If jewelry contacts battery terminal, a direct short may result in instant heating of tools, damage to equipment, and injury or death to personnel.

CONTINUITY TEST

(1) Set multimeter select switch to OHMS.
(2) Set rear wiper switch to HIGH position (TM 10-3930-669-10).
(3) Check continuity between rear wiper switch, terminals 2 and 6.
  (a) If there is no continuity, replace rear wiper switch.
  (b) If there is continuity, go to Step (4) below.
(4) Set rear wiper switch to LOW position.
(5) Check continuity between rear wiper switch, terminals 2 and 3.
  (a) If there is no continuity, replace rear wiper switch.
  (b) If there is continuity, replace rear wiper motor (Para 16-3).
(6) Install rear wiper switch (Para 7-19).

VERIFY REPAIR

(1) Set MAIN POWER switch to ON position (TM 10-3930-669-10).
(2) Set engine switch to ignition position (TM 10-3930-669-10).
(3) Set rear wiper switch to HIGH position (TM 10-3930-669-10).
(4) Observe rear wiper.
  (a) If rear wiper does not operate, fault not corrected. Repeat procedure and notify Supervisor.
  (b) If rear wiper operates, fault corrected.
(5) Set rear wiper switch to OFF position.
(6) Set engine switch to off position.
(7) Set MAIN POWER switch to OFF position.

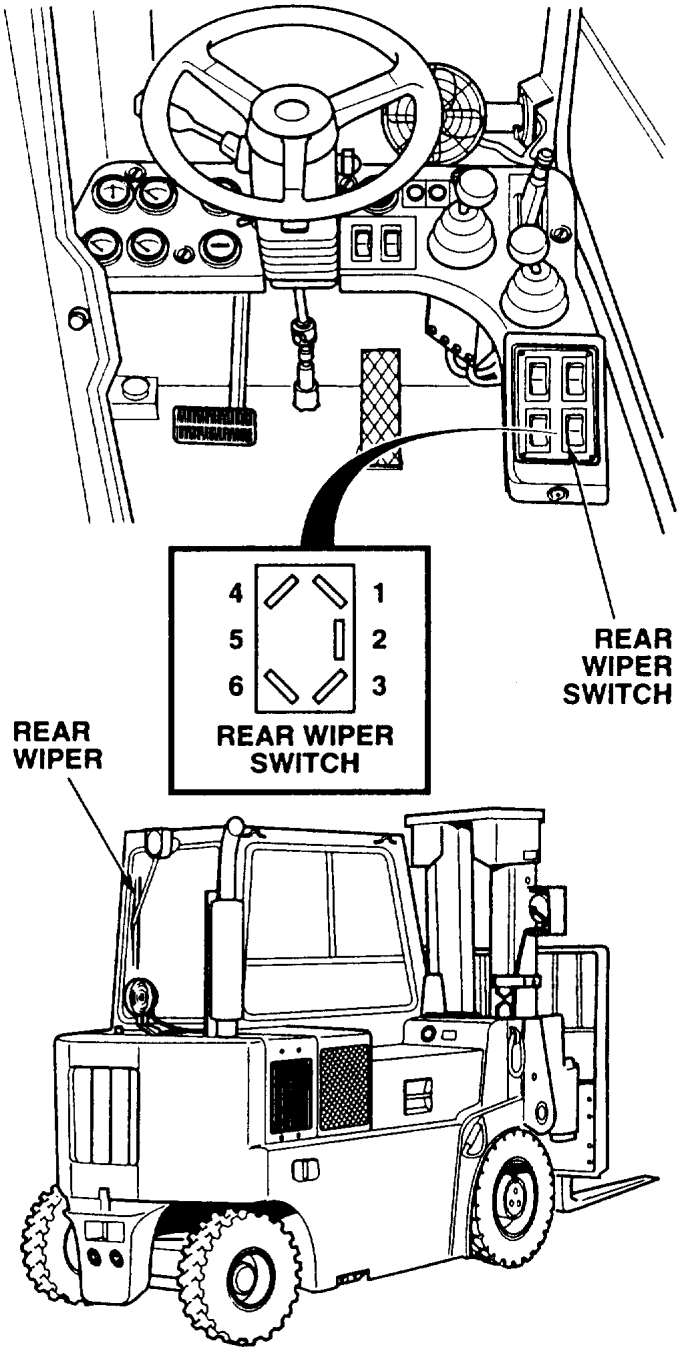

www.truck-freeworkshop.com

2-14. ELECTRICAL SYSTEM TROUBLESHOOTING (CONT).

11. REAR WIPER DOES NOT OPERATE IN LOW.

INITIAL SETUP

Tools and Special Tools
- Tool Kit, General Mechanic's: Automotive (Item 1, Appendix B)
- Multimeter (Item 2, Appendix B)
- STE/ICE-R (Optional) (Item 14, Appendix B)

Equipment Condition
- Engine OFF (TM 10-3930-669-10)
- MAIN POWER switch OFF (TM 10-3930-669-10)
- Parking brake applied (TM 10-3930-669-10)
- Wheels chocked (TM 10-3930-669-10)

References
- TM 10-3930-669-10

NOTE

The following procedure covers rear wiper switch LOW position, but the general steps can be used for top and front wiper switches and HIGH position for all wiper switches.

KNOWN INFO
Rear wiper operates in HIGH position.
POSSIBLE PROBLEMS
Rear wiper switch faulty. Wire 47 faulty. Wiper motor faulty.

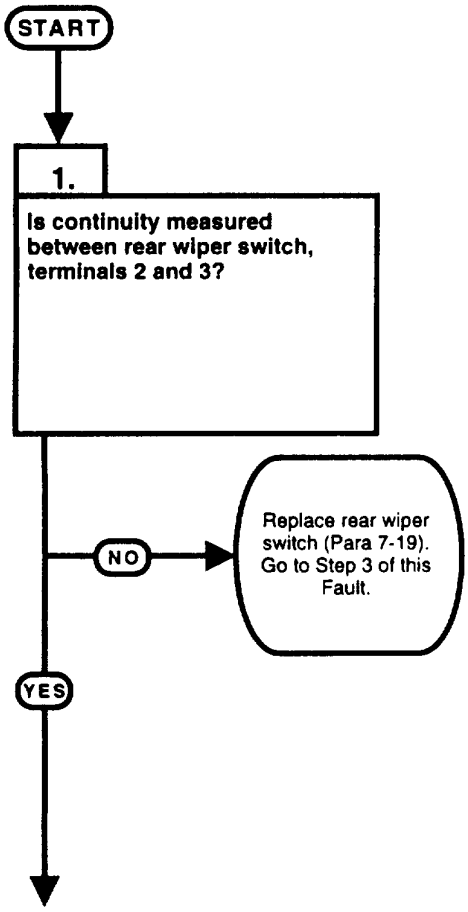

TEST OPTIONS
Continuity test. STE/ICE-R #91.
REASON FOR QUESTION
If continuity is not present, rear wiper switch is faulty.

www.truck-freeworkshop.com

CONTINUITY TEST

(1) Remove rear wiper switch (Para 7-19).
(2) Set rear wiper switch to LOW position (TM 10-3930-669-10).
(3) Set multimeter select switch to OHMS.
(4) Check continuity between rear wiper switch, terminals 2 and 3.
  (a) If there is no continuity, replace rear wiper switch (Para 7-19).
  (b) If there is continuity, rear wiper switch OK.
(5) Install rear wiper switch.

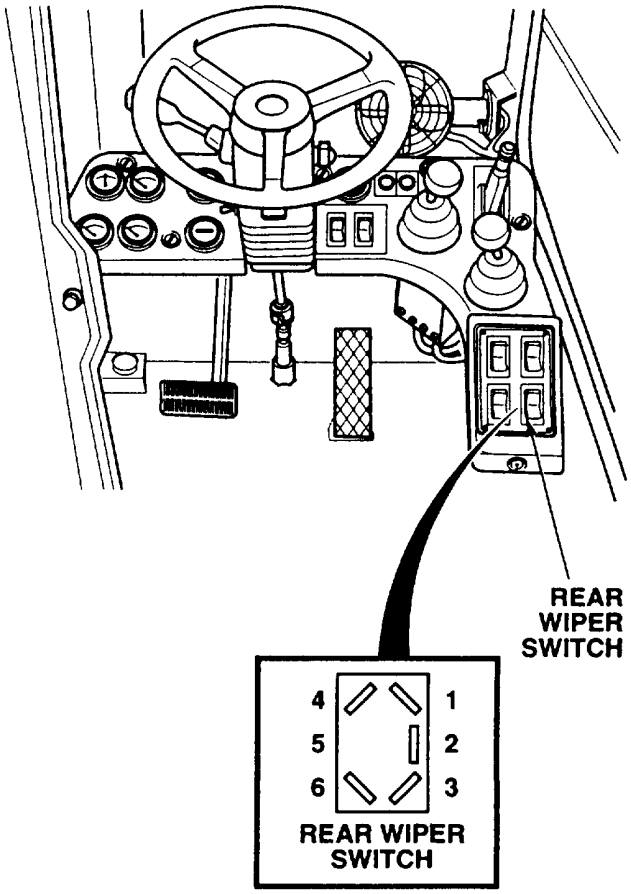

www.truck-freeworkshop.com

11. REAR WIPER DOES NOT OPERATE IN LOW (CONT).

KNOWN INFO
Rear wiper operates in HIGH position. Rear wiper switch OK.
POSSIBLE PROBLEMS
Wire 47 faulty. Wiper motor faulty.

TEST OPTIONS
Voltage test. STE/ICE-R #89.
REASON FOR QUESTION
If 22 to 24 vdc are not present, wire 47 is faulty. If wire 47 is OK, rear wiper motor is faulty.

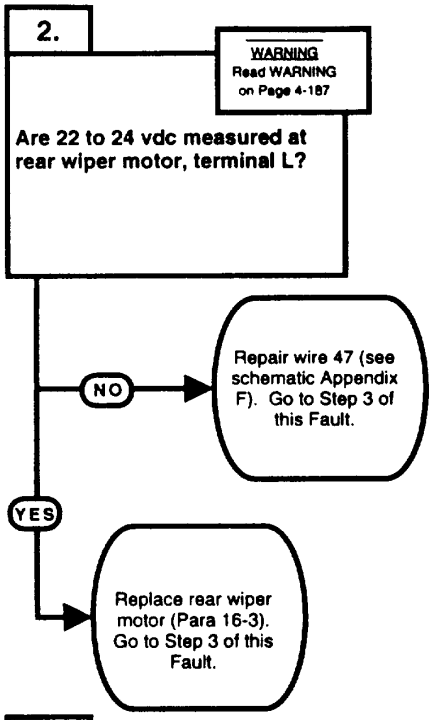

KNOWN INFO
Rear wiper operates in HIGH position. Rear wiper switch OK. Wire 47 OK. Wiper motor OK.
POSSIBLE PROBLEMS

TEST OPTIONS
Verify repair.
REASON FOR QUESTION
If rear wiper operates in LOW, fault has been corrected.

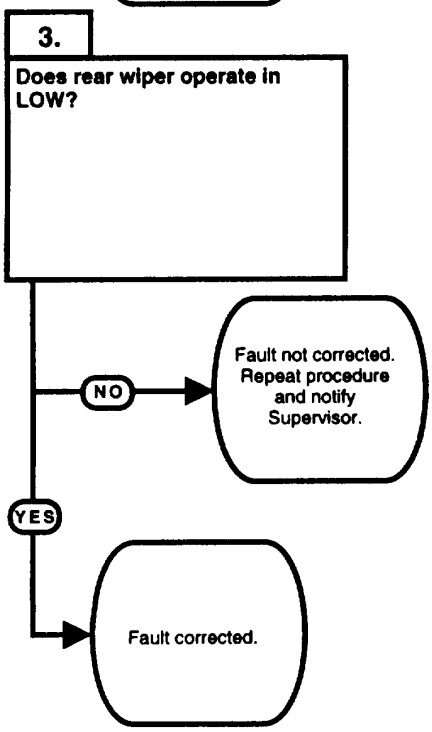

www.truck-freeworkshop.com

WARNING

Remove all jewelry such as rings, dog tags, bracelets, etc. If jewelry contacts battery terminal, a direct short may result in instant heating of tools, damage to equipment, and injury or death to personnel.

VOLTAGE TEST

(1) Set multimeter select switch to VOLTS DC.
(2) Connect positive (+) multimeter lead to rear wiper motor, terminal L .
(3) Connect negative (-) multimeter lead to a known good ground.
(4) Set MAIN POWER switch to ON position (TM 10-3930-669-10).
(5) Set engine switch to ignition position (TM 10-3930-669-10).
  (a) If there are not 22 to 24 vdc present, perform Steps (6) through (8) below and repair wire 47 (see schematic Appendix F).
  (b) If there are 22 to 24 vdc present, perform Steps (6) through (8) below replace rear wiper motor (Para 16-3).
(6) Set rear wiper switch to OFF position.
(7) Set engine switch to oft position.
(8) Set MAIN POWER switch to OFF position.

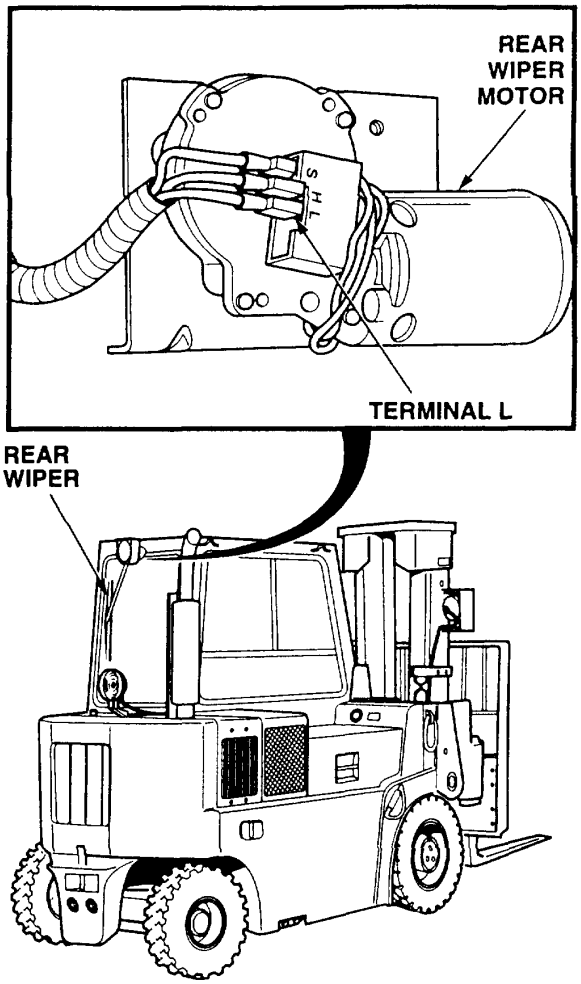

VERIFY REPAIR

(1) Set MAIN POWER switch to ON position (TM 10-3930-669-10).
(2) Set engine switch to ignition position.
(3) Set rear wiper switch to LOW position and observe rear wiper.
  (a) If rear wiper does not operate, fault not corrected. Perform Steps (4) through (6) below.
  Repeat procedure and notify Supervisor.
  (b) It rear wiper operates in LOW, fault corrected.
(4) Set rear wiper switch to OFF position.
(5) Set engine switch to off position.
(6) Set MAIN POWER switch to OFF position.

www.truck-freeworkshop.com

2-14. ELECTRICAL SYSTEM TROUBLESHOOTING (CONT).

12. CAB LIGHT(S) DOES NOT OPERATE.

INITIAL SETUP

Tools and Special Tools
- Tool Kit, General Mechanic's: Automotive (Item 1, Appendix B)
- Multimeter (Item 2, Appendix B)
- STE/ICE-R (Optional) (Item 14, Appendix B)

Equipment Condition
- Engine OFF (TM 10-3930-669-10)
- MAIN POWER switch OFF (TM 10-3930-669-10)
- Parking brake applied (TM 10-3930-669-10)
- Wheels chocked (TM 10-3930-669-10)

References
- TM 10-3930-669-10

KNOWN INFO
24 vdc circuits operate.
POSSIBLE PROBLEMS
Light wire 36 faulty. Light ground wire faulty. Fuse 10 faulty. Wire 36 faulty. Lamp faulty.

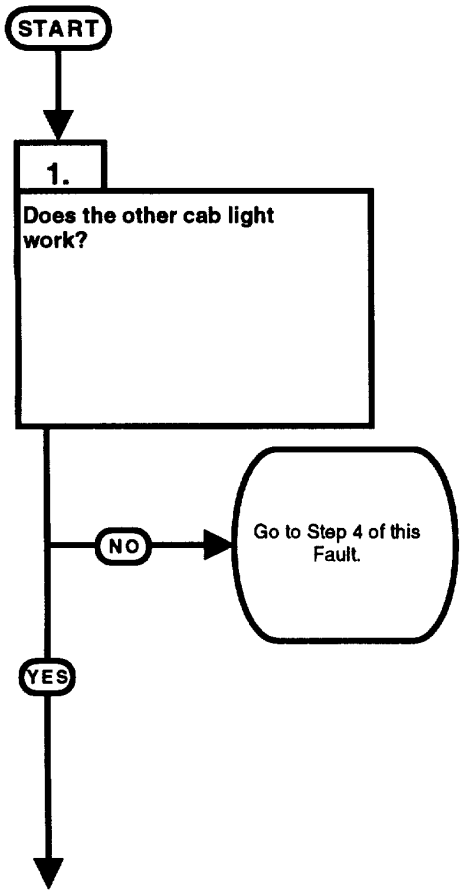

TEST OPTIONS
Visual inspection.
REASON FOR QUESTION
This question eliminates a possible problem or group of possible problems determining where troubleshooting continues.

www.truck-freeworkshop.com

VISUAL INSPECTION
(1) Set MAIN POWER switch to ON position (TM 10-3930-669-10). (2) Set engine switch to ignition position (TM 10-3930-669-10). (3) Turn on both cab lights (TM 10-3930-669-10). (a) If one cab light operates, fault is between lamp and lead wire. Perform Steps (4) through (6) below and go to Step 2 of this Fault. (b) If no cab lights operate, perform Steps (4) through (6) below and go to Step 4 of this Fault. (4) Turn off both cab lights. (5) Set engine switch to off position. (6) Set MAIN POWER switch to OFF position.

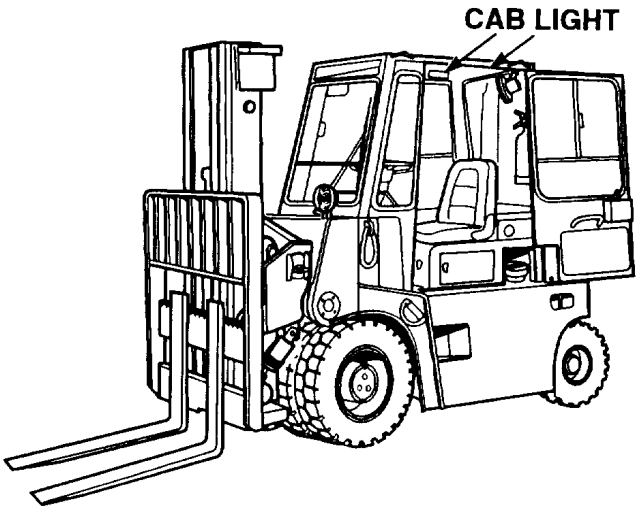

www.truck-freeworkshop.com

12. CAB LIGHT(S) DOES NOT OPERATE (CONT).

KNOWN INFO
24 vdc circuits operate. Fuse 10 OK. Wire 36 OK.
POSSIBLE PROBLEMS
Light wire 36 faulty. Light ground wire faulty. Lamp faulty

TEST OPTIONS
Continuity test. STE/ICE-R #91.
REASON FOR QUESTION
If continuity is not present, lamp is faulty.

2. Is there continuity measured across lamp?

- NO → Replace cab light lamp (Para 7-32). Go to Step 5 of this Fault.
- YES → 3.

KNOWN INFO
24 vdc circuits operate. Lamp OK. Fuse 10 OK. Wire 36 OK.
POSSIBLE PROBLEMS
Light wire 36 faulty. Light ground wire faulty.

TEST OPTIONS
Voltage test. STE/ICE-R #89.
REASON FOR QUESTION
If 22 to 24 vdc are not present, light wire 36 is faulty. If light wire 36 is OK, light ground wire is faulty.

3. Are 22 to 24 vdc measured at cab light wire 36 terminal?

WARNING
Read WARNING on Page 2-191

- NO → Repair wire 36 (see schematic Appendix F). Go to Step 5 of this Fault.
- YES → Replace light ground wire (See schematic Appendix F). Go to Step 5 of this Fault.

www.truck-freeworkshop.com

WARNING

Remove all jewelry such as rings, dog tags, bracelets, etc. If jewelry contacts battery terminal, a direct short may result in instant heating of tools, damage to equipment, and injury or death to personnel.

CONTINUITY TEST

(1) Remove cab light lamp (Para 7-32).
(2) Set multimeter select switch to OHMS.
(3) Check continuity across lamp terminals.
  (a) If there is no continuity, replace lamp.
  (b) If there is continuity, lamp is OK.
(4) Install cab light lamp.

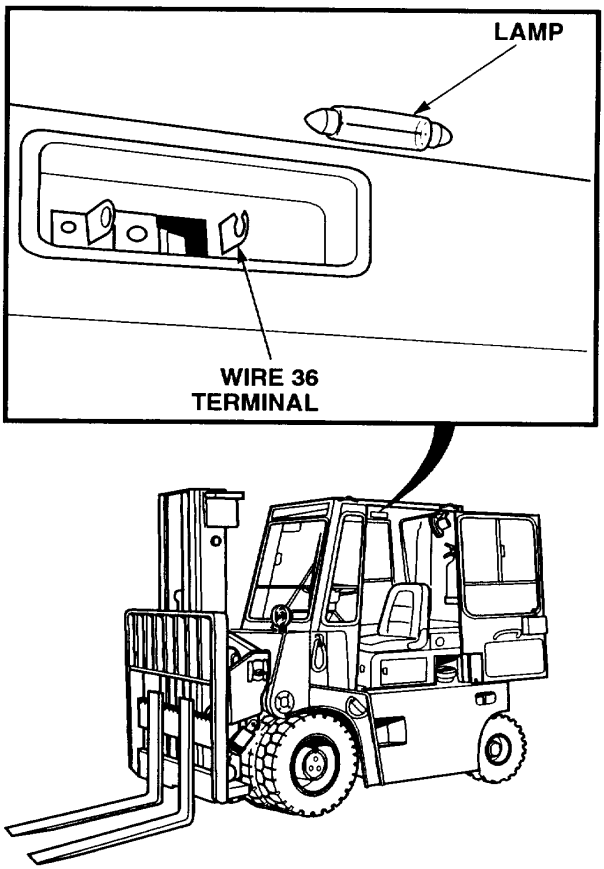

VOLTAGE TEST

(1) Remove cab light (Para 7-32).
(2) Set multimeter select switch to VOLTS DC.
(3) Connect positive (+) multimeter lead to cab light wire 36 terminal.
(4) Connect negative (-) multimeter lead to a known good ground.
(5) Set MAIN POWER switch to ON position (TM 10-3930-669-10).
(6) Set engine switch to ignition position (TM 10-3930-669-10).
  (a) If there are not 22 to 24 vdc present, perform Steps (5) through (7) below and repair light wire 36 (see schematic Appendix F).
  (b) If there are 22 to 24 vdc present, perform Steps (5) and (7) below and replace light ground wire (See schematic Appendix F).
(5) Set engine switch to off position.
(6) Set MAIN POWER switch to OFF position.
(7) Install cab light.

www.truck-freeworkshop.com

12. CAB LIGHT(S) DOES NOT OPERATE (CONT).

KNOWN INFO
24 vdc circuits operate. Lamp OK. Light wire 36 OK. Light ground wire OK.
POSSIBLE PROBLEMS
Fuse 10 faulty. Wire 36 faulty.

TEST OPTIONS
Visual test.
REASON FOR QUESTION
If element is broken, fuse 10 is faulty.

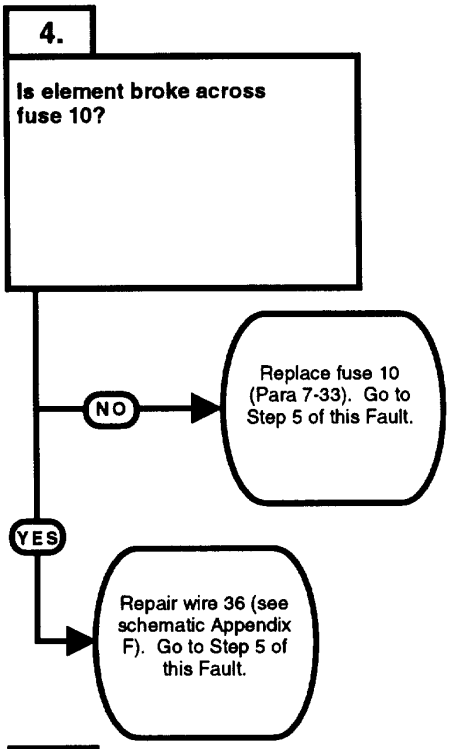

KNOWN INFO
24 vdc circuits operate. Lamp OK. Light wire 36 OK. Light ground wire OK. Fuse 10 OK. Wire 36 OK.
POSSIBLE PROBLEMS

TEST OPTIONS
Verify repair.
REASON FOR QUESTION
If cab lights operate, fault has been corrected.

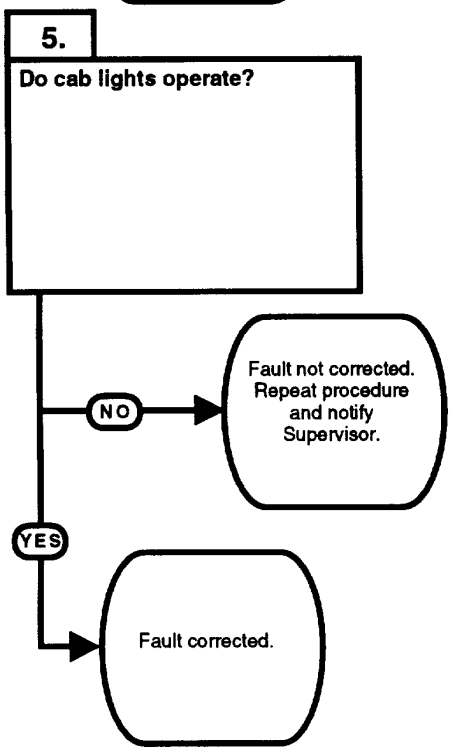

www.truck-freeworkshop.com

CONTINUITY TEST

(1) Remove fuse 10 (Para 7-33).
(2) Check element across fuse.
  (a) If there is a break, replace fuse 10.
  (b) If there is not a break, fuse 10 is OK.
(4) Install fuse 10.

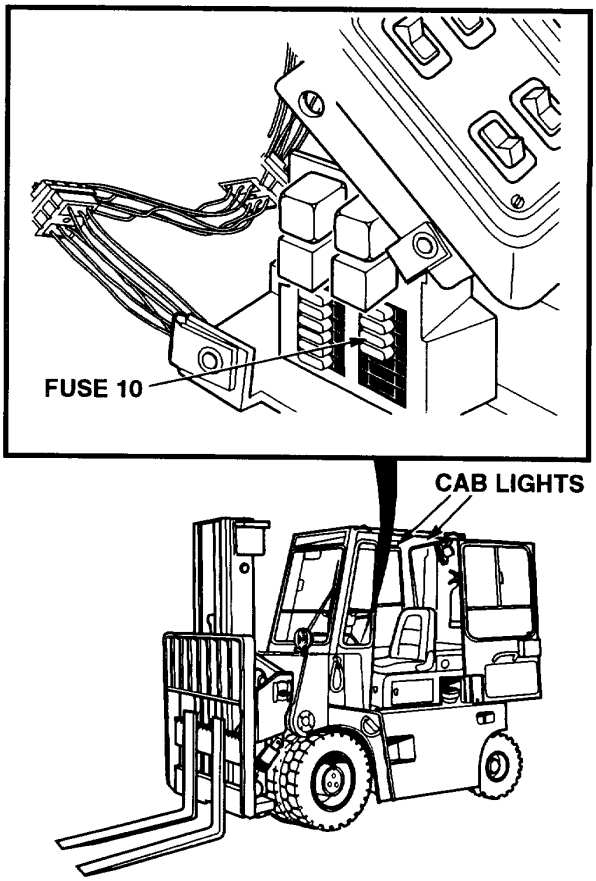

VERIFY REPAIR

(1) Set MAIN POWER switch to ON position (TM 10-3930-669-10).
(2) Set engine switch to ignition position (TM 10-3930-669-10).
(3) Turn on cab lights (TM 10-3930-669-10).
(4) Observe cab lights.
  (a) If cab lights do not operate, fault not corrected. Perform Steps (5) through (7) below. Repeat procedure and notify Supervisor.
  (b) If cab lights operate, fault corrected.
(5) Turn off cab lights.
(6) Set engine switch to off position.
(7) Set MAIN POWER switch to OFF position.

www.truck-freeworkshop.com

2-14. ELECTRICAL SYSTEM TROUBLESHOOTING (CONT).

13. GAUGE LIGHT DOES NOT OPERATE.

INITIAL SETUP

Tools and Special Tools
Tool Kit, General Mechanic's: Automotive (Item 1, Appendix B)
Multimeter (Item 2, Appendix B)
STE/ICE-R (Optional) (Item 14, Appendix B)

References
TM 10-3930-669-10

Equipment Condition
Engine OFF (TM 10-3930-669-10)
MAIN POWER switch OFF (TM 10-3930-669-10)
Parking brake applied (TM 10-3930-669-10)
Wheels chocked (TM 10-3930-669-10)

NOTE
The following troubleshooting procedures cover the engine oil temperature gauge light, but they can apply to any gauge light.

KNOWN INFO
Front floodlight, mastlight, and other gauge lights operate.
POSSIBLE PROBLEMS
Gauge lamp faulty. Gauge wire 25 faulty.

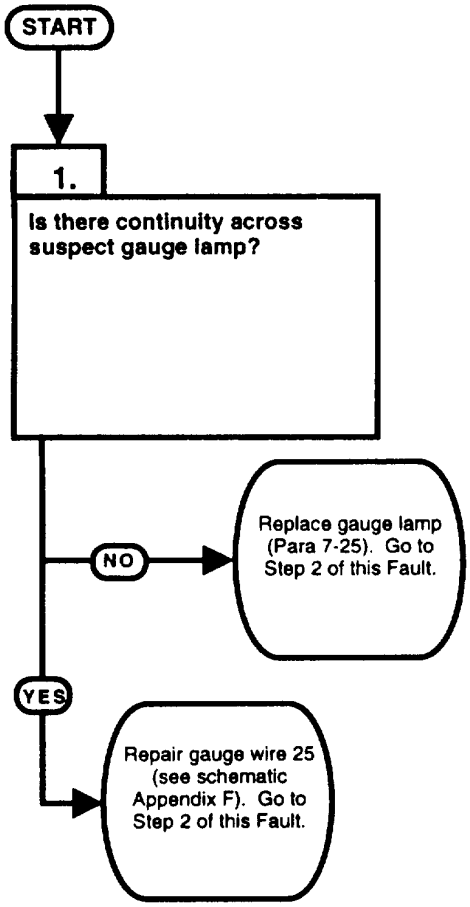

TEST OPTIONS
Continuity test. STE/I1CE-R #91.
REASON FOR QUESTION
If continuity is not present, gauge lamp is faulty. If gauge lamp is OK, gauge wire 25 is faulty.

www.truck-freeworkshop.com

CONTINUITY TEST

(1) Remove suspect gauge lamp (Para 7-25).
(2) Set multimeter select switch to OHMS.
(3) Check continuity across lamp terminals.
  (a) If there is no continuity, replace gauge lamp.
  (b) If there is continuity, repair gauge wire 25 (See Schematic Appendix F).
(4) Install gauge lamp.

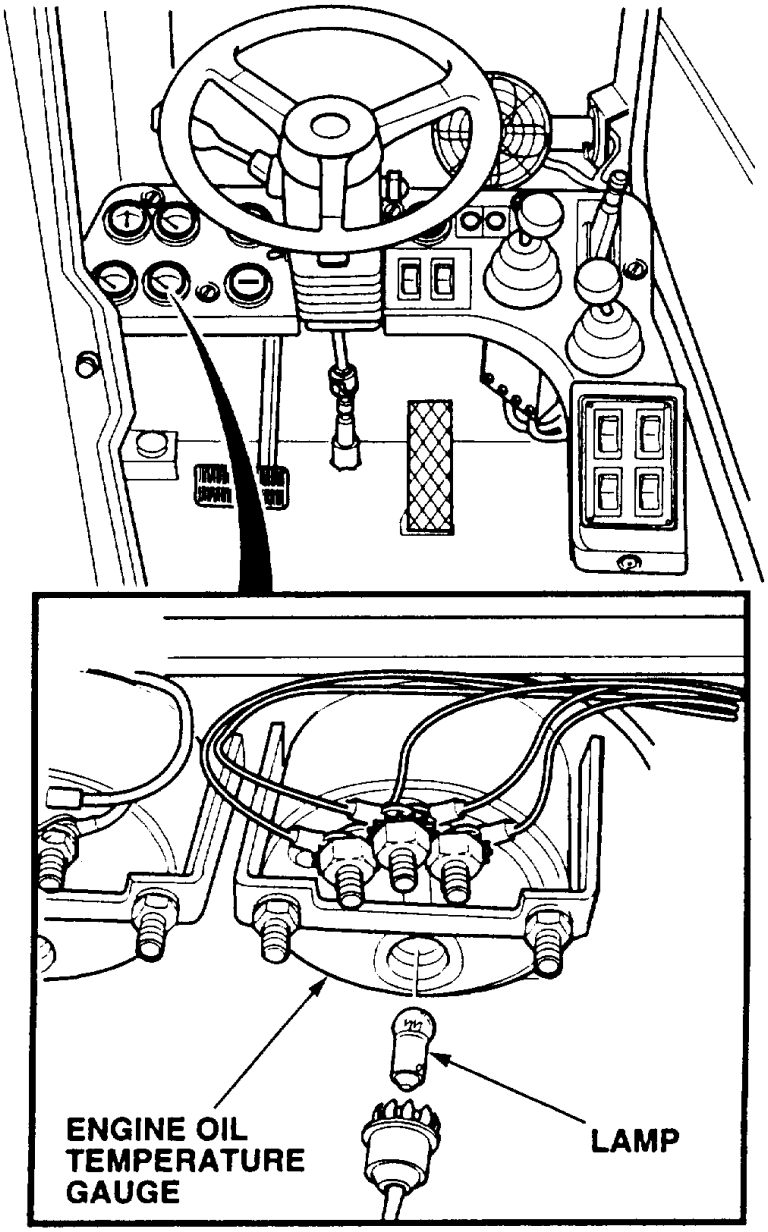

www.truck-freeworkshop.com

13. GAUGE LIGHT DOES NOT OPERATE (CONT).

KNOWN INFO
Front floodlight, mastlight, and other gauge lights operate. Gauge lamp OK. Gauge wire 25 OK.
POSSIBLE PROBLEMS

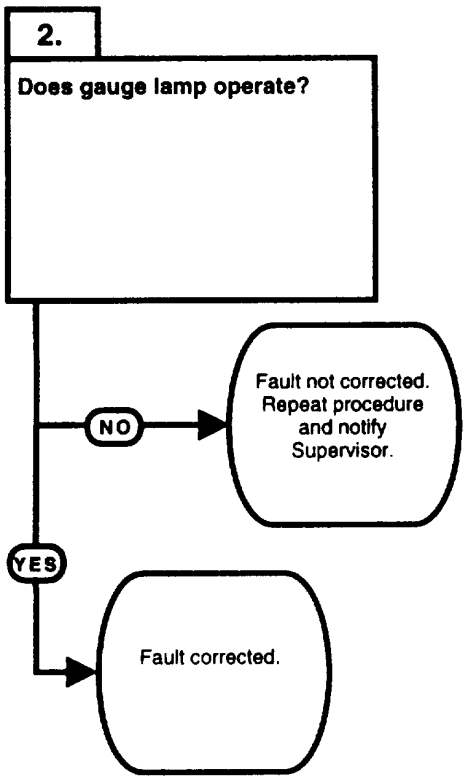

TEST OPTIONS
Verify repair.
REASON FOR QUESTION
If gauge lamp operates, fault has been corrected.

www.truck-freeworkshop.com

VERIFY REPAIR

(1) Set MAIN POWER switch to ON position (TM 10-3930-669-10).
(2) Set engine switch to ignition position (TM 10-3930-669-10).
(3) Set front light switch to ON position (TM 10-3930-669-10).
(4) Observe gauge light.
  (a) If gauge light does not operate, fault not corrected. Perform Steps (5) through (7) below. Repeat procedure and notify Supervisor.
  (b) If gauge light operates, fault corrected.
(5) Set front light switch to OFF position.
(6) Set engine switch to off position.
(7) Set MAIN POWER switch to OFF position.

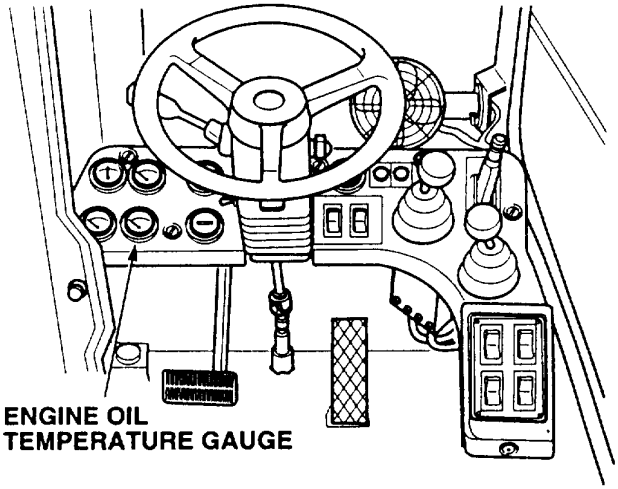

www.truck-freeworkshop.com

2-14. ELECTRICAL SYSTEM TROUBLESHOOTING (CONT).

14. STOPLIGHT DOES NOT OPERATE.

INITIAL SETUP

Tools and Special Tools
Tool Kit, General Mechanic's: Automotive (Item 1, Appendix B)
Multimeter (Item 2, Appendix B)
STE/ICE-R (Optional) (Item 14, Appendix B)

Equipment Condition
Engine OFF (TM 10-3930-669-10)
MAIN POWER switch OFF (TM 10-3930-669-10)
Parking brake applied (TM 10-3930-669-10)
Wheels chocked (TM 10-3930-669-10)

References
TM 10-3930-669-10

KNOWN INFO
Taillight OK 24 VDC circuits operate
POSSIBLE PROBLEMS
Stoplight lamp faulty. Stoplight faulty. Wire 27 faulty. Brake switch faulty. Wire 27A faulty.

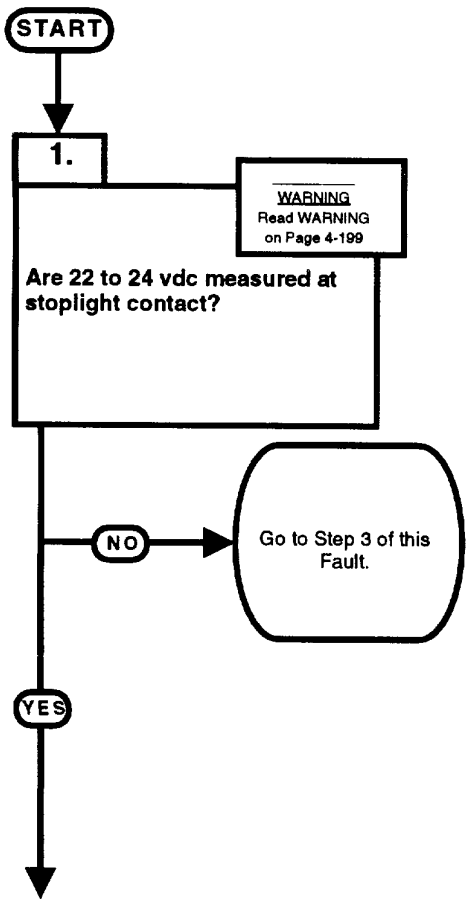

TEST OPTIONS
Voltage test. STEA/CE-R #89.
REASON FOR QUESTION
This question eliminates a possible problem or group of possible problems determining where troubleshooting continues.

www.truck-freeworkshop.com

WARNING

Remove all jewelry such as rings, dog tags, bracelets, etc. If jewelry contacts battery terminal, a direct short may result in instant heating of tools, damage to equipment, and injury or death to personnel.

VOLTAGE TEST

(1) Remove taillight lamp (Para 7-31).
(2) Set multimeter select switch to VOLTS DC.
(3) Connect positive (+) multimeter lead to stoplight contact.
(4) Connect negative (-) multimeter lead to a known good ground.
(5) Set MAIN POWER switch to ON position (TM 10-3930-669-10).
(6) Apply brake and set engine switch to ignition position (TM 10-3930-669-10).
  (a) If there are not 22 to 24 vdc present, perform Steps (7) through (9) below and go to Step 3 of this Fault.
  (b) If there are 22 to 24 vdc present, perform Steps (7) and (8) below and go to Step 2 of this Fault.
(7) Set engine switch to off position and release brake.
(8) Set MAIN POWER switch to OFF position.
(9) Install taillight lamp.

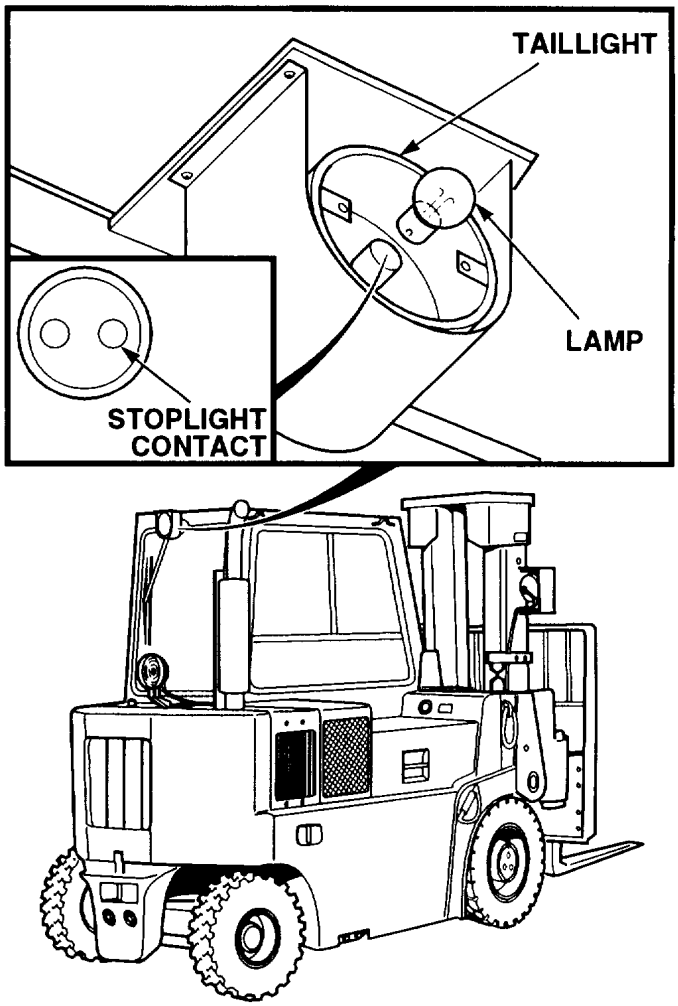

www.truck-freeworkshop.com

14. STOPLIGHT DOES NOT OPERATE (CONT).

KNOWN INFO
Horn operates. Wire 27 OK. Brake switch OK. Wire 27A OK.
POSSIBLE PROBLEMS
Stoplight lamp faulty. Stoplight faulty.

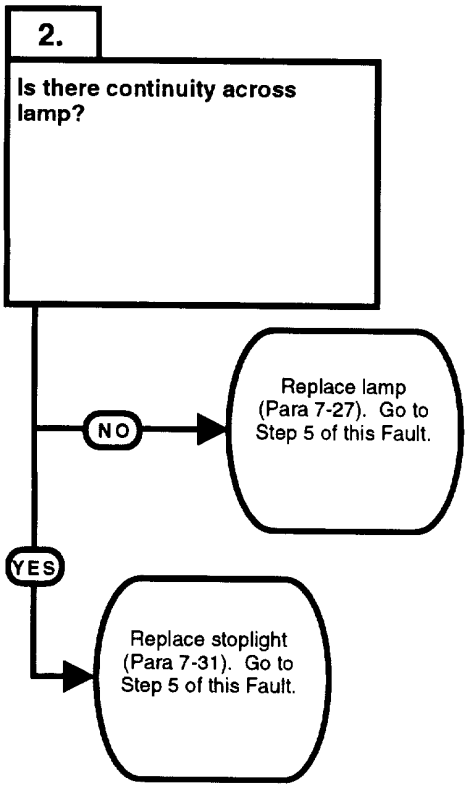

TEST OPTIONS
Continuity test. STE/ICE-R #91.
REASON FOR QUESTION
If continuity is not present, lamp is faulty. If lamp is OK, stoplight is faulty.

www.truck-freeworkshop.com

CONTINUITY TEST
(1) Set multimeter select switch to OHMS. (2) Check continuity across stoplight lamp terminals. (a) If there is no continuity, replace lamp (Para 7-27). (b) If there is continuity, replace stoplight.

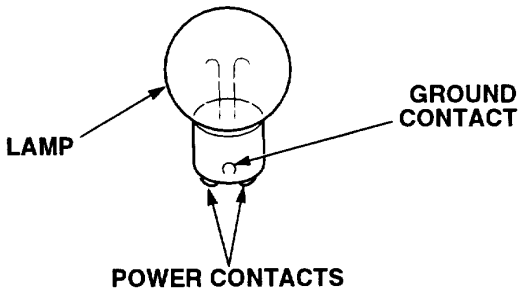

www.truck-freeworkshop.com

14. STOPLIGHT DOES NOT OPERATE (CONT).

KNOWN INFO
Horn operates. Stoplight lamp OK. Stoplight OK.
POSSIBLE PROBLEMS
Wire 27 faulty. Brake switch faulty. Wire 27A faulty.

3.

WARNING
Read WARNING on Page 4-203

Are 22 to 24 vdc measured at brake switch wire 27 terminal?

NO → Repair wire 27 (see schematic Appendix F). Go to Step 5 of this Fault.

YES ↓

TEST OPTIONS
Voltage test. STE/ICE-R #89.
REASON FOR QUESTION
If 22 to 24 vdc are not present, wire 27 is faulty.

KNOWN INFO
Horn operates. Stoplight lamp OK. Stoplight OK. Wire 27 OK.
POSSIBLE PROBLEMS
Brake switch faulty. Wire 27A faulty.

4.

Is there continuity measured across brake switch?

NO → Replace brake switch (Para 7-18). Go to Step 5 of this Fault.

YES → Repair wire 27A (see schematic Appendix F). Go to Step 5 of this Fault.

TEST OPTIONS
Continuity test. STE/ICE-R #91.
REASON FOR QUESTION
If continuity is not measured, brake switch is faulty. If brake switch is OK, wire 27A is faulty.

www.truck-freeworkshop.com

WARNING

Remove all jewelry such as rings, dog tags, bracelets, etc. If jewelry contacts battery terminal, a direct short may result in instant heating of tools, damage to equipment, and injury or death to personnel.

VOLTAGE TEST

(1) Set multimeter select switch to VOLTS DC.
(2) Connect positive (+) multimeter lead to brake switch wire 27 terminal.
(3) Connect negative (-) multimeter lead to a known good ground.
(4) Set MAIN POWER switch to ON position (TM 10-3930-669-10).
(5) Set engine switch to ignition position (TM 10-3930-669-10).
(6) Check for voltage.
  (a) If there are not 22 to 24 vdc present, perform Steps (7) and (8) below and replace wire 27 (See schematic Appendix F).
  (b) If there are 22 to 24 vdc present, wire 27 is OK.
(7) Set engine switch to off position.
(8) Set MAIN POWER switch to OFF position.

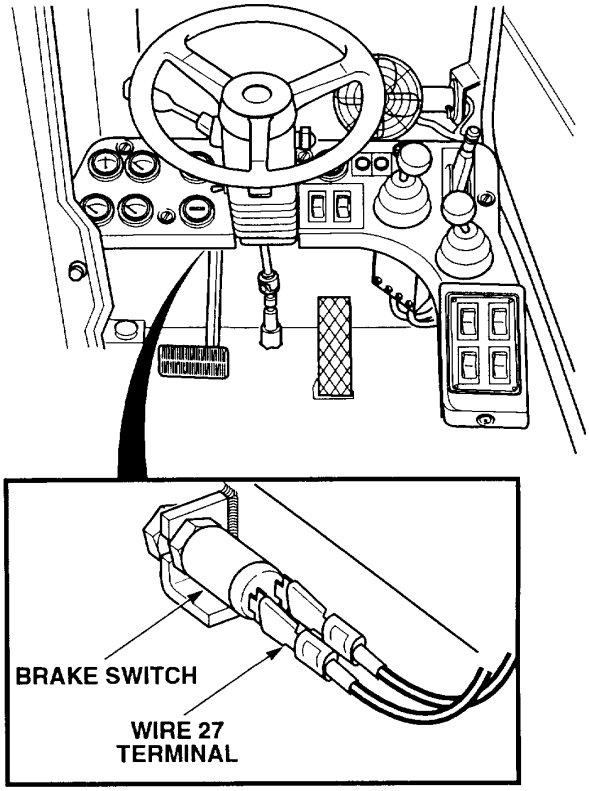

CONTINUITY TEST

(1) Set multimeter select switch to OHMS.
(2) Depress brake pedal.
(3) Check continuity across brake switch.
  (a) If there is no continuity, replace brake switch (Para 7-18).
  (b) If there is continuity, repair wire 27A (see schematic Appendix F).

www.truck-freeworkshop.com

14. STOPLIGHT DOES NOT OPERATE (CONT).

KNOWN INFO
Horn operates. Stoplight lamp OK. Stoplight OK. Wire 27 OK. Brake switch OK. Wire 27A OK.
POSSIBLE PROBLEMS

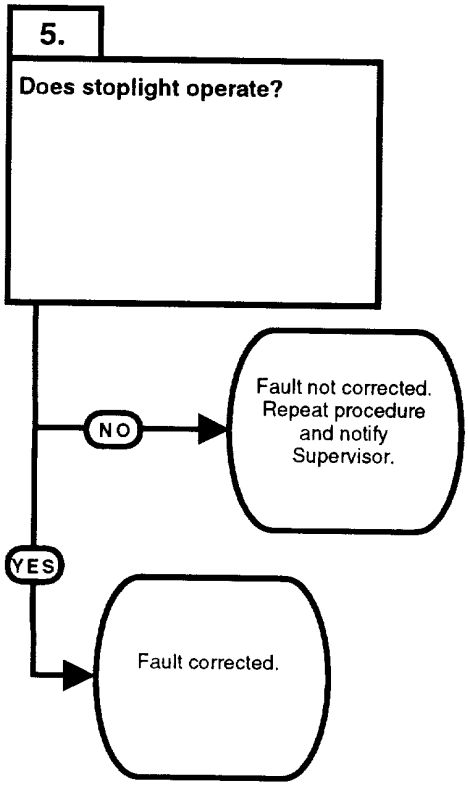

TEST OPTIONS
Verify repair.
REASON FOR QUESTION
If stoplight operates, fault has been corrected.

www.truck-freeworkshop.com

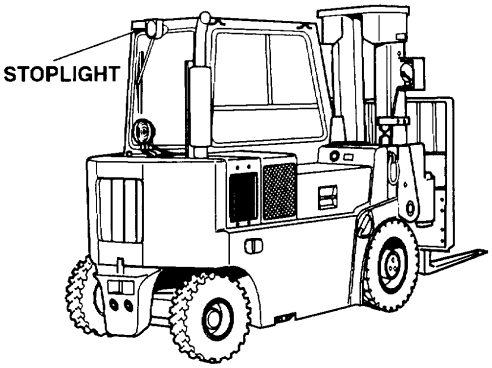

VERIFY REPAIR
(1) Start engine (TM 10-3930-669-10). (2) Apply brake pedal (TM 10-3930-669-10). (3) Observe stoplight. (a) If stoplight does not operate, fault not corrected. Perform Step (4) below. Repeat procedure and notify Supervisor. (b) If stoplight operates, fault corrected. (4) Shut down engine.

www.truck-freeworkshop.com

2-14. ELECTRICAL SYSTEM TROUBLESHOOTING (CONT).

15. HORN DOES NOT OPERATE.

INITIAL SETUP

Tools and Special Tools
- Tool Kit, General Mechanic's: Automotive (Item 1, Appendix B)
- Multimeter (Item 2, Appendix B)
- STE/ICE-R (Optional) (Item 14, Appendix B)

References
- TM 10-3930-669-10

Equipment Condition
- Engine OFF (TM 10-3930-669-10)
- MAIN POWER switch OFF (TM 10-3930-669-10)
- Parking brake applied (TM 10-3930-669-10)
- Wheels chocked (TM 10-3930-669-10)

KNOWN INFO

24 vdc circuits operate.

POSSIBLE PROBLEMS

Horn contact plate faulty.
Wire 21 faulty.
Horn faulty.
Fuse 5 faulty.
Wire 27 faulty.

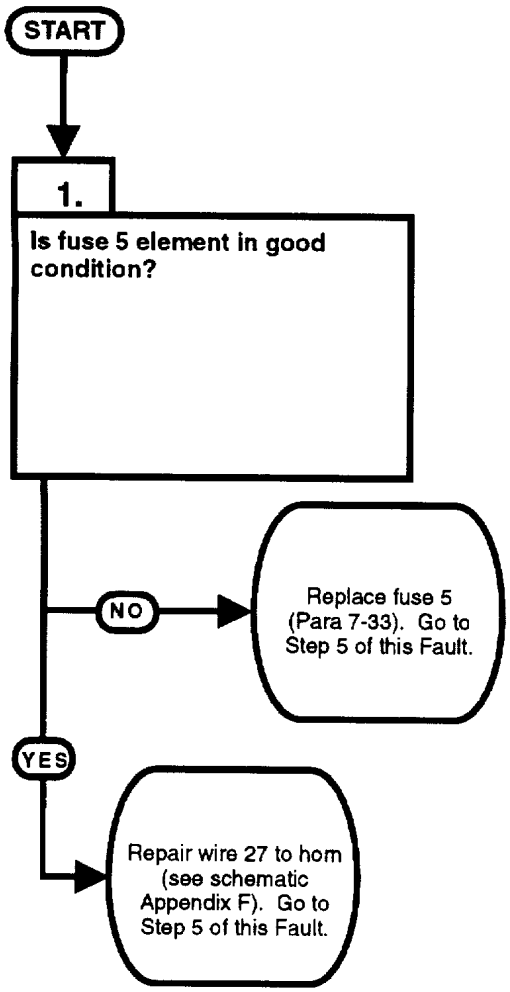

TEST OPTIONS

Visual test.

REASON FOR QUESTION

If element is broken, fuse 5 is faulty.

www.truck-freeworkshop.com

VISUAL TEST
(1) Remove fuse 5 (Para 7-33). (2) Check element across fuse. (a) If there is a break, replace fuse 5. (b) If there is not a brake, fuse 5 is OK. (4) Install fuse 5.

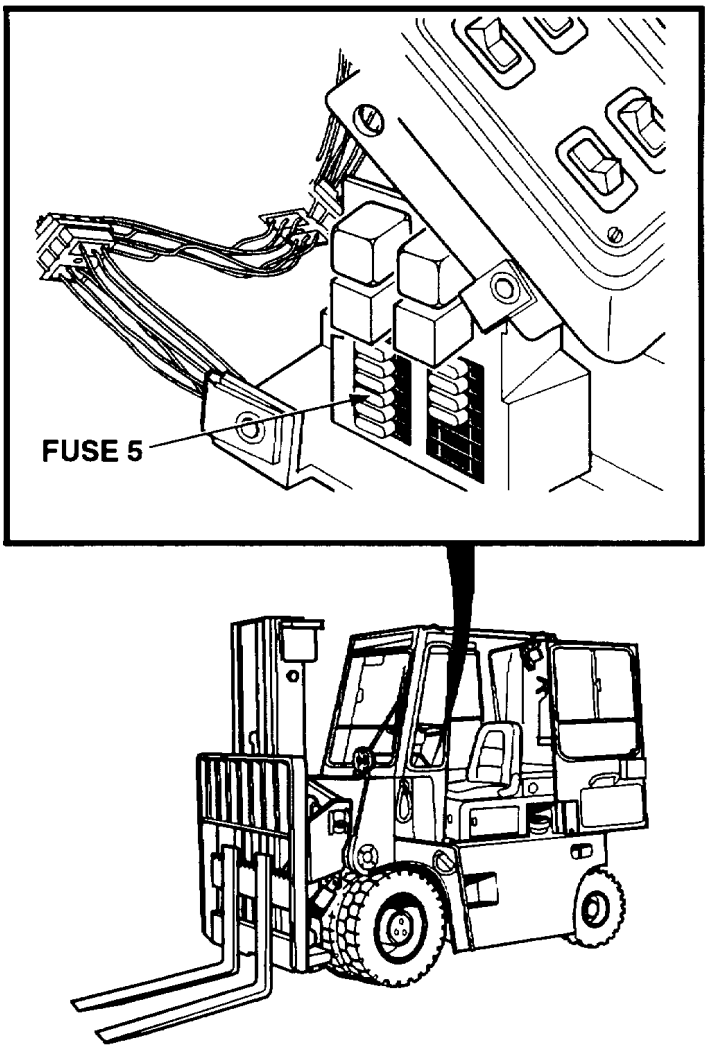

www.truck-freeworkshop.com

15. HORN DOES NOT OPERATE (CONT).

KNOWN INFO
24 vdc circuits operate. Fuse 5 OK.
POSSIBLE PROBLEMS
Wire 27 faulty. Horn faulty. Horn contact plate faulty. Wire 21 faulty.

TEST OPTIONS
Voltage test. STEACE-R #89.
REASON FOR QUESTION
This question eliminates a possible problem or group of possible problems determining where troubleshooting continues.

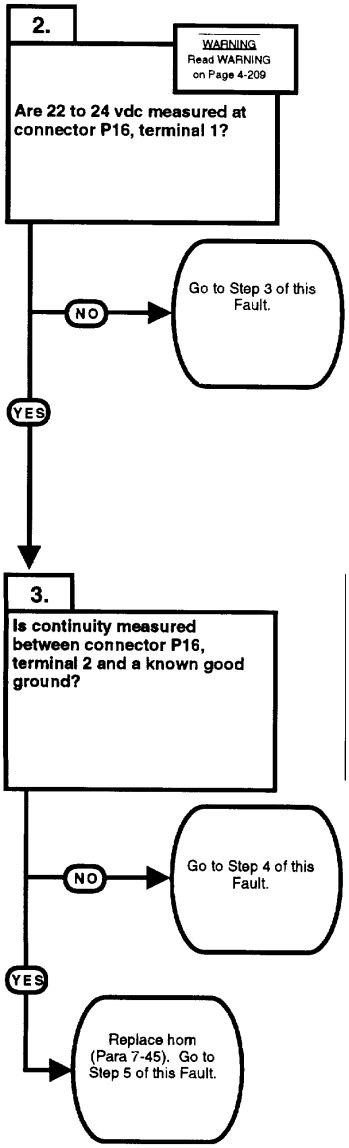

KNOWN INFO
24 vdc circuits operate. Fuse 5 OK. Wire 27 OK.
POSSIBLE PROBLEMS
Horn faulty. Horn contact plate faulty. Wire 21 faulty.

TEST OPTIONS
Continuity test. STE/ICE-R #91.
REASON FOR QUESTION
If continuity is not present, fault is ground circuit. If continuity is present, horn is faulty.

www.truck-freeworkshop.com

WARNING

Remove all jewelry such as rings, dog tags, bracelets, etc. If jewelry contacts battery terminal, a direct short may result in instant heating of tools, damage to equipment, and injury or death to personnel.

VOLTAGE TEST

(1) Remove floor plate (Para 15-12).
(2) Disconnect connector P16 from horn.
(3) Set multimeter select switch to VOLTS DC.
(4) Connect positive (+) multimeter lead to connector P16, terminal 1.
(5) Connect negative (-) multimeter lead to a known good ground.
(6) Set MAIN POWER switch to ON position (TM 10-3930-669-10).
(7) Set engine switch to ignition position (TM 10-3930-669-10).
  (a) If there are not 22 to 24 vdc present, perform Steps (8) through (11) below and go to Step 3 of this Fault.
  (b) If there are 22 to 24 vdc present, perform Steps (8) through (9) below and go to Step 2 of this Fault.
(8) Set engine switch to off position.
(9) Connect connector P16 to horn.
(10) Set MAIN POWER switch to OFF position.
(11) Install floor plate.

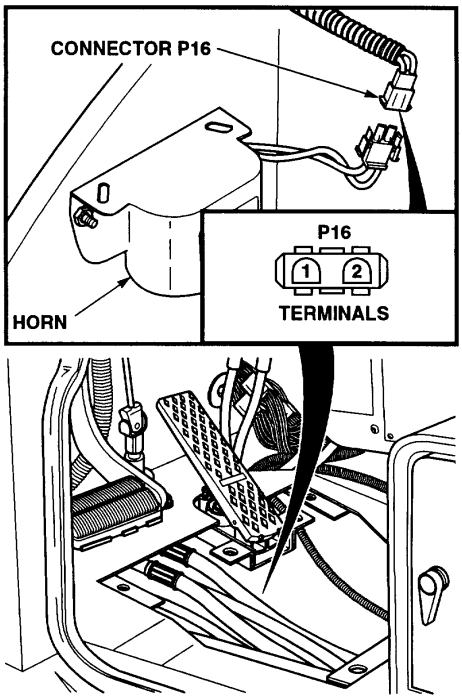

CONTINUITY TEST

(1) Disconnect connector P16.
(2) Set multimeter select switch to OHMS.
(3) Depress horn switch and check continuity between connector P16, terminal 2 and a known good ground.
  (a) If there is no continuity, perform Steps (4) and (5) below and go to Step 4 of this Fault.
  (b) If there is continuity, replace horn (Para 7-45).
(4) Connect connector P16.
(5) Install floor plate (Para 15-12).

www.truck-freeworkshop.com

15. HORN DOES NOT OPERATE (CONT).

KNOWN INFO
24 vdc circuits operate. Fuse 5 OK. Wire 27 OK. Horn OK.
POSSIBLE PROBLEMS
Horn contact plate faulty. Wire 21 faulty.

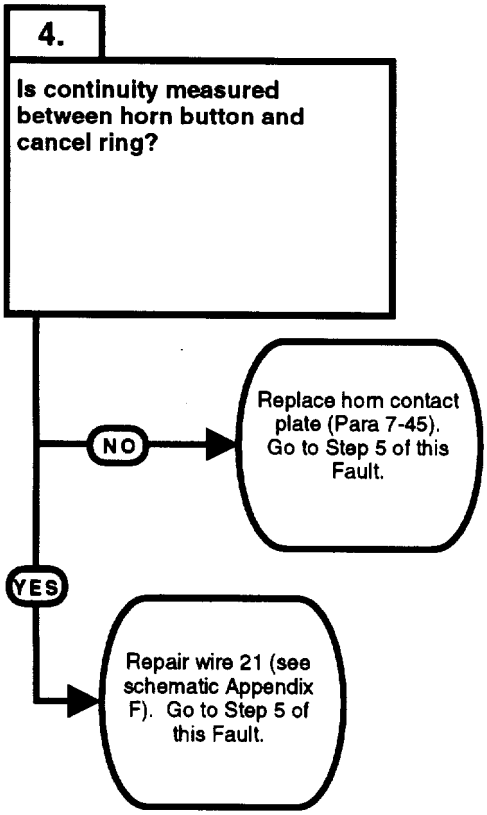

TEST OPTIONS
Continuity test. STE/ICE-R #91.
REASON FOR QUESTION
If continuity is not present, horn relay coil is faulty. If horn is OK, wire 21 is faulty.

www.truck-freeworkshop.com

CONTINUITY TEST
(1) Remove horn contact plate (Para 7-45). (2) Set multimeter select switch to OHMS. (3) Depress horn button. (4) Check continuity between tang and cancel ring on button. (a) If there is no continuity, replace horn contact plate. (b) If there is continuity, repair wire 21 (see schematic Appendix F). (5) Install horn button.

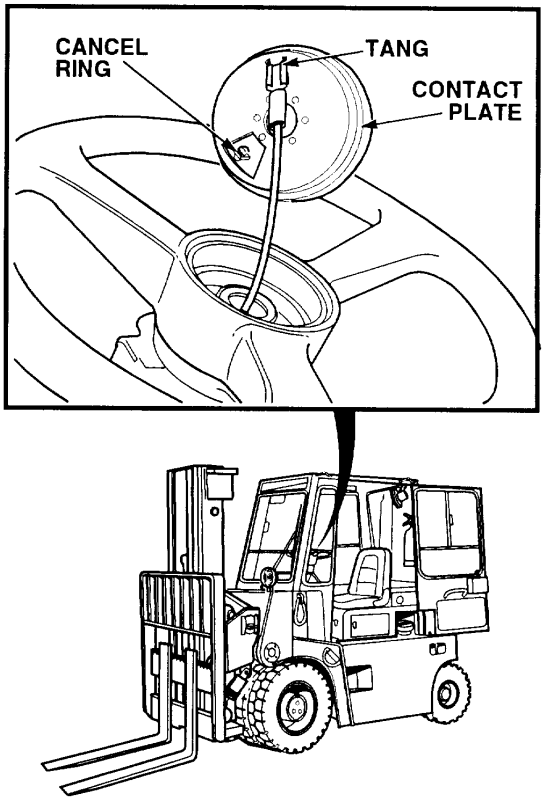

www.truck-freeworkshop.com

15. HORN DOES NOT OPERATE (CONT).

KNOWN INFO
24 vdc circuits operate. Fuse 5 OK. Wire 27 OK. Horn OK. Horn contact plate OK. Wire 21 OK.
POSSIBLE PROBLEMS

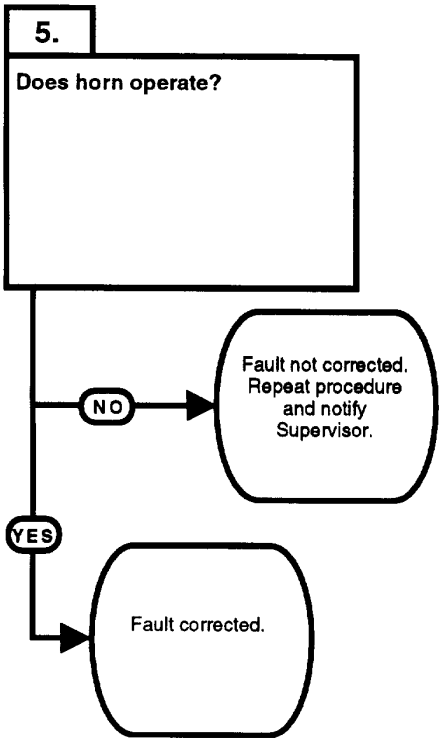

TEST OPTIONS
Verify repair.
REASON FOR QUESTION
If horn operates, fault has been corrected.

www.truck-freeworkshop.com

VERIFY REPAIR
(1) Set MAIN POWER switch to ON position (TM 10-3930-669-10). (2) Set engine switch to ignition position. (3) Depress horn button. (a) If horn does not operate, fault not corrected. Perform Steps (4) and (5) below. Repeat procedure and notify Supervisor. (b) If horn does operate, fault corrected. (4) Set engine switch to off position. (5) Set MAIN POWER switch to OFF position.

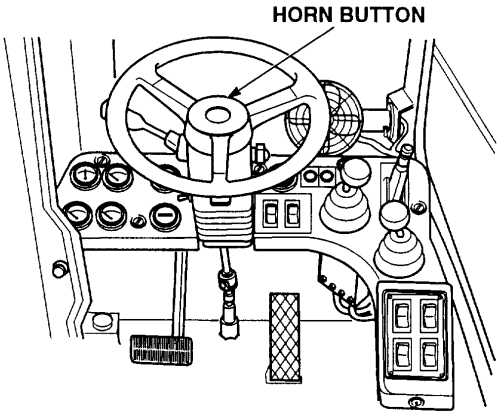

www.truck-freeworkshop.com

2-14. ELECTRICAL SYSTEM TROUBLESHOOTING (CONT).

16. FAN(S) DOES NOT OPERATE.

INITIAL SETUP

Tools and Special Tools
- Tool Kit, General Mechanic's: Automotive (Item 1, Appendix B)
- Multimeter (Item 2, Appendix B)
- STE/ICE-R (Optional) (Item 14, Appendix B)

References
- TM 10-3930-669-10

Equipment Condition
- Engine OFF (TM 10-3930-669-10)
- MAIN POWER switch OFF (TM 10-3930-669-10)
- Parking brake applied (TM 10-3930-669-10)
- Wheels chocked (TM 10-3930-669-10)

KNOWN INFO

Cab lights operate.

POSSIBLE PROBLEMS

Fan motor faulty.
Wire 36 faulty.
Ground wire 13 faulty.

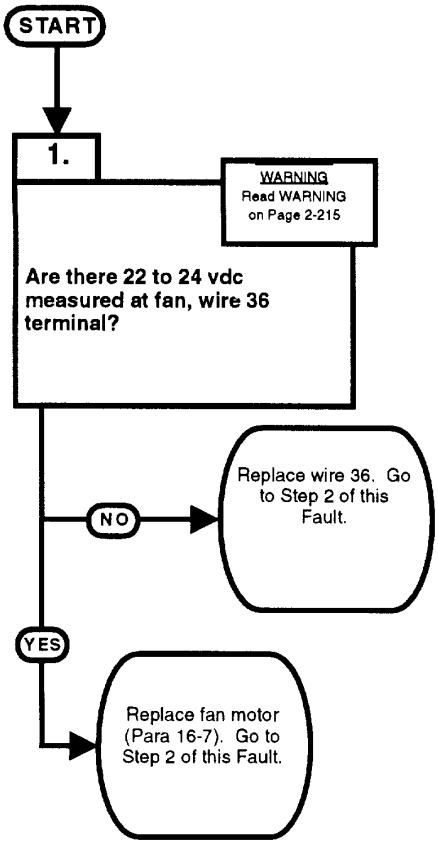

TEST OPTIONS

Voltage test.
STE/ICE-R #89.

REASON FOR QUESTION

If 22 to 24 vdc are not present, wire 36 is faulty. If wire 36 is OK, fan motor is faulty.

www.truck-freeworkshop.com

WARNING

Remove all jewelry such as rings, dog tags, bracelets, etc. If jewelry contacts battery terminal, a direct short may result in instant heating of tools, damage to equipment, and injury or death to personnel.

VOLTAGE TEST
(1) Disconnect connector from suspect fan connector. (2) Set multimeter select switch to VOLTS DC. (3) Connect positive (+) multimeter lead to wire 36. (4) Connect negative (-) multimeter lead to a known good ground. (5) Set MAIN POWER switch to ON position (TM 10-3930-669-10). (6) Set engine switch to ignition position (TM 10-3930-669-10). (a) If there are not 22 to 24 vdc present, perform Steps (7) and (8) below and replace wire 36 (See Schematic Appendix F). (b) If there are 22 to 24 vdc present, replace fan assembly (Para 16-7). (7) Set engine switch to off position. (8) Set MAIN POWER switch to OFF position. (9) Connect connector to suspect fan connector.

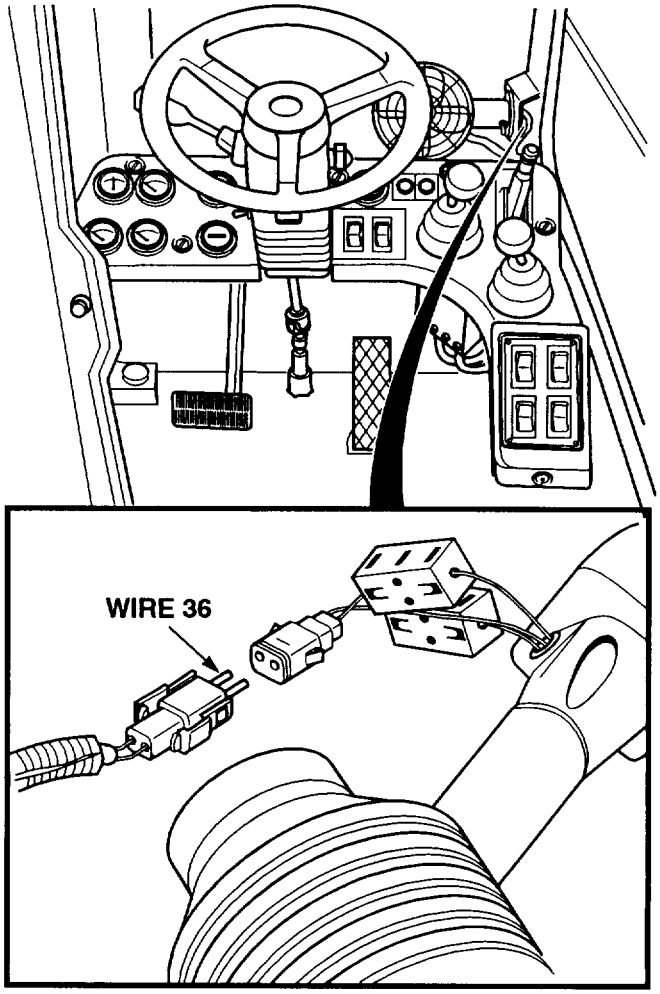

www.truck-freeworkshop.com

16. FAN(S) DOES NOT OPERATE (CONT)

KNOWN INFO
Cab lights operate. Wire 36 OK.
POSSIBLE PROBLEMS
Ground wire 13 faulty.

TEST OPTIONS
Continuity test. STE/ICE-R #91.
REASON FOR QUESTION
If continuity is not present, ground wire 13 is faulty.

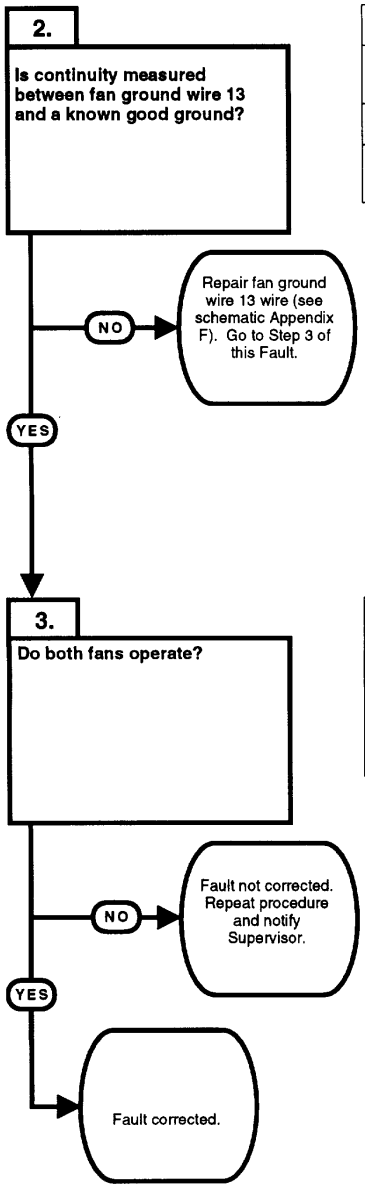

KNOWN INFO
Cab lights operate. Fan motor OK. Wire 36 OK. Ground wire 13 OK.
POSSIBLE PROBLEMS

TEST OPTIONS
Verify repair.
REASON FOR QUESTION
If fans operate, fault has been corrected.

www.truck-freeworkshop.com

CONTINUITY TEST

(1) Disconnect connector from suspect fan connector.
(2) Set multimeter select switch to OHMS.
(3) Check continuity between ground wire 13 and a known good ground.
  (a) If there is no continuity, repair fan ground wire 13 (see schematic Appendix F).
  (b) If there is continuity, fan ground wire 13 is OK.

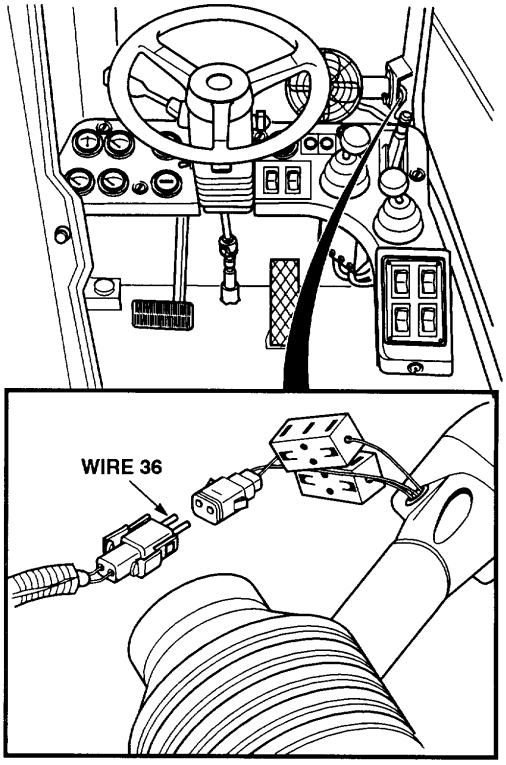

VERIFY REPAIR

(1) Set MAIN POWER switch to ON position (TM 10-3930-669-10).
(2) Set engine switch to ignition position (TM 10-3930-669-10).
(3) Turn ON both fans.
  (a) If both fans do not operate, fault not corrected. Perform Steps (4) through (6) below. Repeat procedure and notify Supervisor.
  (b) If both fans operate, fault corrected.
(4) Turn OFF both fans.
(5) Set engine switch to off position.
(6) Set MAIN POWER switch to OFF position.

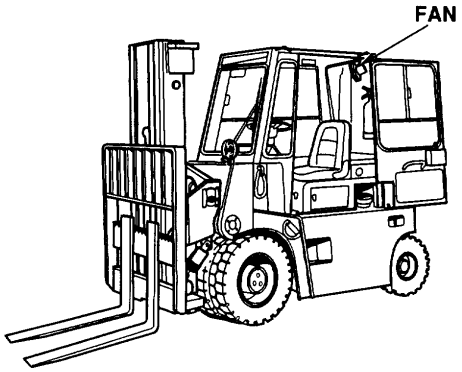

www.truck-freeworkshop.com

2-14. ELECTRICAL SYSTEM TROUBLESHOOTING (CONT).

17. HEATER BLOWER DOES NOT OPERATE.	
INITIAL SETUP Tools and Special Tools Tool Kit, General Mechanic's: Automotive (Item 1, Appendix B) Multimeter (Item 2, Appendix B) STE/ICE-R (Optional) (Item 14, Appendix B) References TM 10-3930-669-10	Equipment Condition Engine OFF (TM 10-3930-669-10) MAIN POWER switch OFF (TM 10-3930-669-10) Parking brake applied (TM 10-3930-669-10) Wheels chocked (TM 10-3930-669-10)

KNOWN INFO
24 vdc circuits operate.
POSSIBLE PROBLEMS
Fuse 9 faulty. Wire 38 faulty. Heater blower switch faulty. Blower motor ground wire faulty. Fan blower motor faulty.

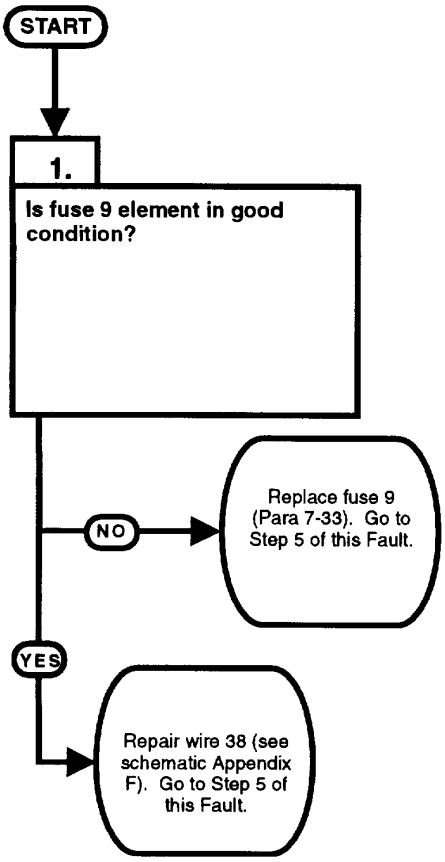

TEST OPTIONS
Visual test.
REASON FOR QUESTION
If element is broken, fuse 9 is faulty. If fuse 9 is OK, wire 38 is faulty.

www.truck-freeworkshop.com

VISUAL TEST
(1) Remove fuse 9 (Para 7-33). (2) Check element across fuse 9. (a) If element is broken, replace fuse 9. (b) If element is not broken, repair wire 38 (see schematic Appendix F). (3) Install fuse 9.

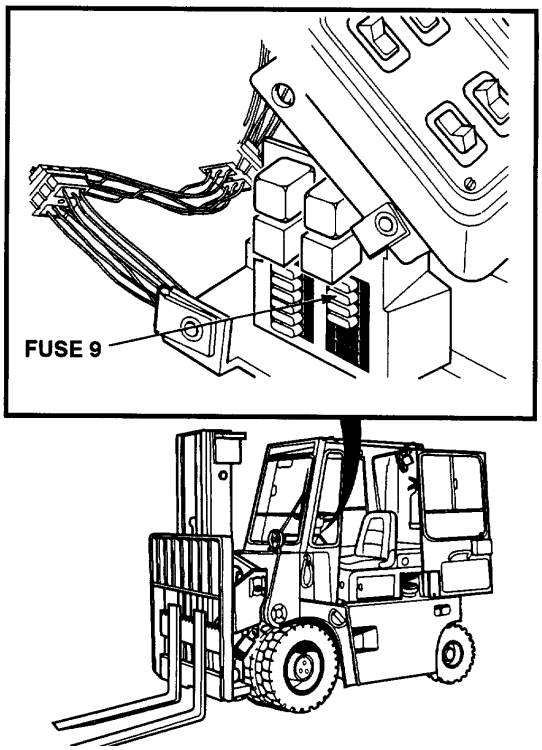

www.truck-freeworkshop.com

17. HEATER BLOWER DOES NOT OPERATE (CONT).

KNOWN INFO
24 vdc circuits operate. Fuse 9 OK. Wire 38 OK.
POSSIBLE PROBLEMS
Heater blower switch faulty. Blower motor ground wire faulty. Fan blower motor faulty.

TEST OPTIONS
Voltage test. STE/ICE-R #89.
REASON FOR QUESTION
This question eliminates a possible problem or group of possible problems determining where troubleshooting continues.

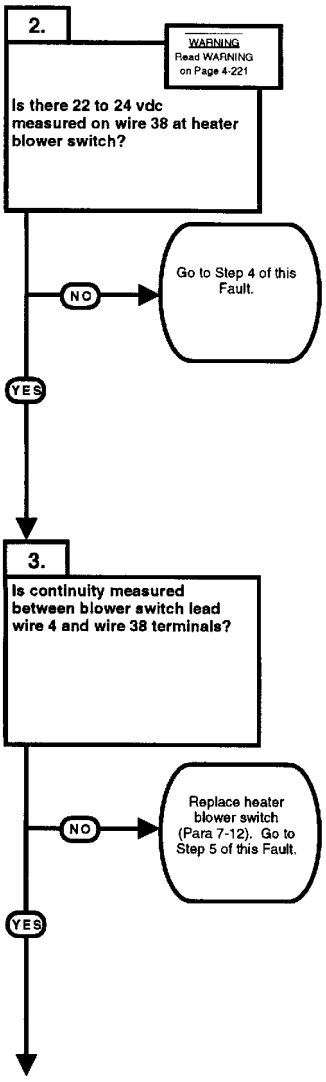

KNOWN INFO
24 vdc circuits operate. Fuse 9 OK. Wire 38 OK. Heater blower switch OK.
POSSIBLE PROBLEMS
Blower motor ground wire faulty. Fan blower motor faulty.

TEST OPTIONS
Continuity test. STE/ICE-R #91.
REASON FOR QUESTION
If continuity is not present, blower switch is faulty.

www.truck-freeworkshop.com

WARNING

Remove all jewelry such as rings, dog tags, bracelets, etc. If jewelry contacts battery terminal, a direct short may result in instant heating of tools, damage to equipment, and injury or death to personnel.

VOLTAGE TEST

(1) Remove heater blower switch (Para 7-12). Do not disconnect wires.
(2) Disconnect wire 38 from blower switch.
(3) Set multimeter select switch to VOLTS DC.
(4) Connect positive (+) multimeter lead to wire 38.
(5) Connect negative (-) multimeter lead to a known good ground.
(6) Set MAIN POWER switch to ON position (TM 10-3930-669-10).
(7) Set engine switch to ignition position (TM 10-3930-669-10).
  (a) If there are not 22 to 24 vdc present, perform Steps (8) through (11) below and go to Step 4 of this Fault.
  (b) If there are 22 to 24 vdc present, perform Steps (8) and (9) below and go to Step 2 of this Fault.
(8) Set engine switch to off position.
(9) Set MAIN POWER switch to OFF position.
(10) Connect wire 38 to heater blower switch.
(11) Install heater blower switch.

CONTINUITY TEST

(1) Disconnect wires 1 and 38.
(2) Set blower switch to HIGH position.
(3) Set multimeter select switch to OHMS,
(4) Check continuity between blower switch lead wire 4 and wire 38 terminals.
  (a) If there is no continuity, replace heater blower switch (Para 7-12).
  (b) If there is continuity, heater blower switch is OK.
(5) Set blower switch to OFF position.
(6) Connect wires 1 and 38 to heater blower switch.
(7) Install blower switch.

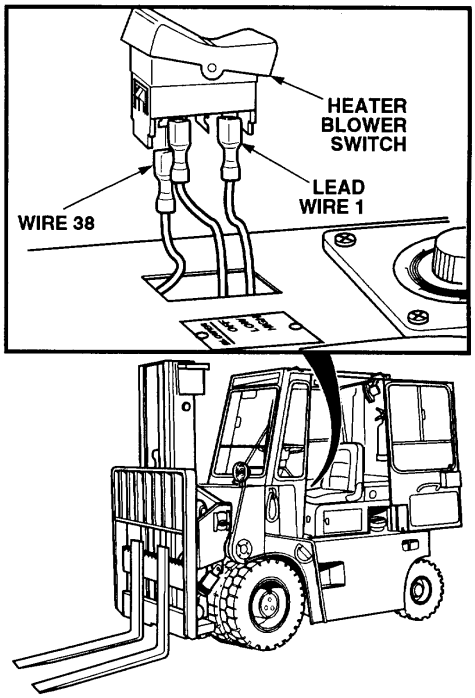

www.truck-freeworkshop.com

17. HEATER BLOWER DOES NOT OPERATE (CONT).

KNOWN INFO
24 vdc circuits operate. Fuse 9 OK. Wire 38 OK. Heater blower switch OK. Blower motor ground wire OK. POSSIBLE PROBLEMS Fan blower motor faulty.

4.

Is continuity measured between heater motor connector ground wire terminal and a known good ground?

NO → Repair ground wire (see schematic Appendix F). Go to Step 5 of this Fault.

YES → Replace fan blower motor (Para 16-8). Go to Step 5 of this Fault.

TEST OPTIONS
Continuity test. STE/ICE-R #91.
REASON FOR QUESTION
If continuity is not present, ground wire is faulty. If ground wire is OK, fan blower motor is faulty.

5.

Does heater blower operate?

NO → Replace fan blower motor (Para 16-8).

YES → Fault corrected.

KNOWN INFO
24 vdc circuits operate. Fuse 9 OK. Wire 38 OK. Heater blower switch OK. Blower motor ground wire OK. Fan blower motor OK.
POSSIBLE PROBLEMS

TEST OPTIONS
Verify repair.
REASON FOR QUESTION
If heater blower operates, fault has been corrected.

www.truck-freeworkshop.com

CONTINUITY TEST

(1) Remove heater housing cover (Para 16-8).
(2) Disconnect heater motor connector.
(3) Set multimeter select switch to OHMS.
(4) Check continuity between heater motor connector ground wire terminal and a known good ground.
  (a) If there is no continuity, repair ground wire (see schematic Appendix F).
  (b) If there is continuity, replace fan blower motor (Para 16-8).
(5) Install heater housing cover.

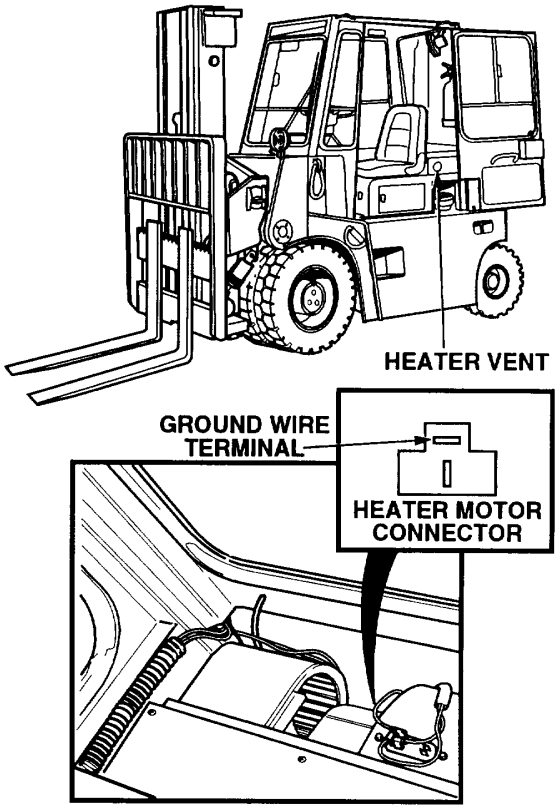

VERIFY REPAIR

(1) Set MAIN POWER switch to ON position (TM 10-3930-669-10).
(2) Set engine switch to ignition position. (TM 10-3930-669-10).
(3) Set heater blower switch to HIGH position (TM 10-3930-669-10).
  (a) If blower does not operate, fault not corrected. Perform Steps (4) through (6) below. Replace fan blower motor (Para 16-8).
  (b) If blower operates, fault corrected.
(4) Set heater blower switch to OFF position.
(5) Set engine switch to off position.
(6) Set MAIN POWER switch to OFF position.

www.truck-freeworkshop.com

2-14. ELECTRICAL SYSTEM TROUBLESHOOTING (CONT).

18. HEATER BLOWER DOES NOT OPERATE IN HIGH	
INITIAL SETUP Tools and Special Tools Tool Kit, General Mechanic's: Automotive (Item 1, Appendix B) Multimeter (Item 2, Appendix B) STE/ICE-R (Optional) (Item 14, Appendix B) References TM 10-3930-669-10	Equipment Condition Engine OFF (TM 10-3930-669-10) MAIN POWER switch OFF (TM 10-3930-669-10) Parking brake applied (TM 10-3930-669-10) Wheels chocked (TM 10-3930-669-10)

NOTE

The following procedure covers HIGH position, but the general steps can be used for LOW position.

KNOWN INFO
Heater operates in LOW.
POSSIBLE PROBLEMS
Heater blower switch faulty. Lead wire 4 faulty. Fan blower motor faulty.

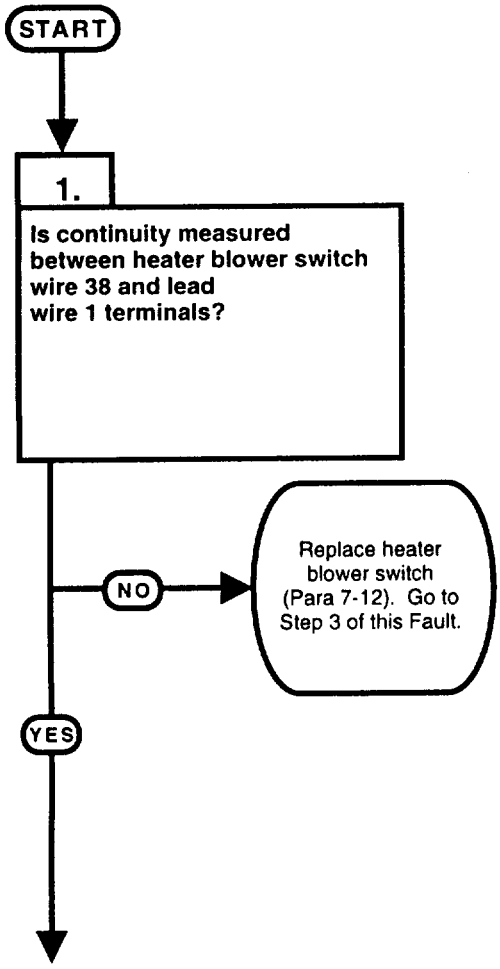

TEST OPTIONS
Continuity test. STE/ICE-R #91.
REASON FOR QUESTION
If continuity is not present, heater blower switch is faulty.

www.truck-freeworkshop.com

CONTINUITY TEST
(1) Remove heater blower switch (Para 7-12). (2) Set multimeter select switch to OHMS. (3) Set heater blower switch to HIGH position (TM 10-3930-669-10). (4) Check continuity between heater blower switch wire 38 and lead wire 1 terminals. (a) If there is no continuity, replace heater blower switch. (b) If there is continuity, heater blower switch is OK. (5) Install heater blower switch.

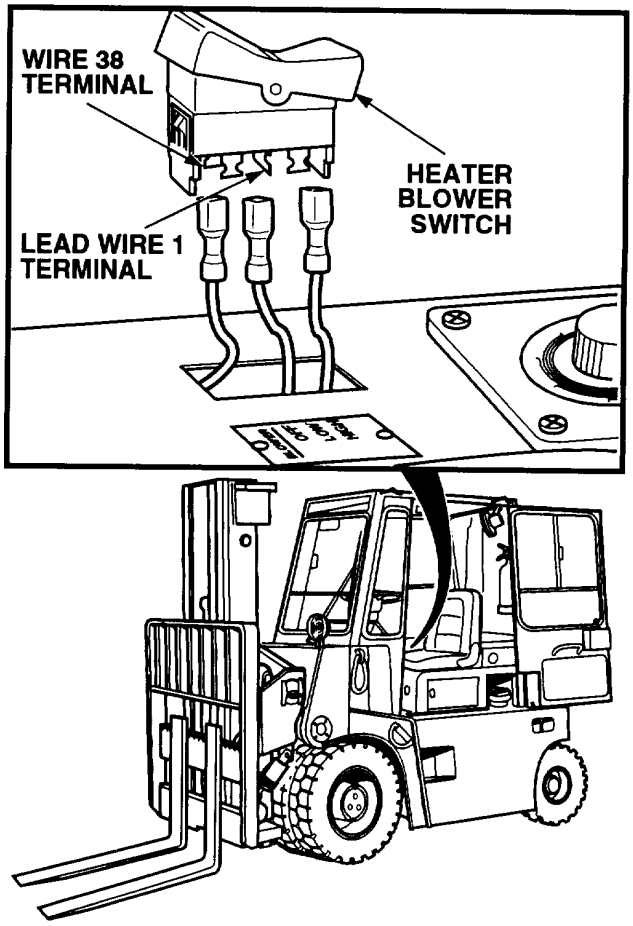

www.truck-freeworkshop.com

18. HEATER BLOWER DOES NOT OPERATE IN HIGH (CONT).

KNOWN INFO
Heater operates in LOW. Heater blower switch OK.
POSSIBLE PROBLEMS
Lead wire 4 faulty. Fan blower motor faulty.

TEST OPTIONS
Voltage test. STE/ICE-R #89.
REASON FOR QUESTION
If 22 to 24 vdc are not present, lead wire 4 is faulty. If lead wire 4 is OK, fan blower motor is faulty.

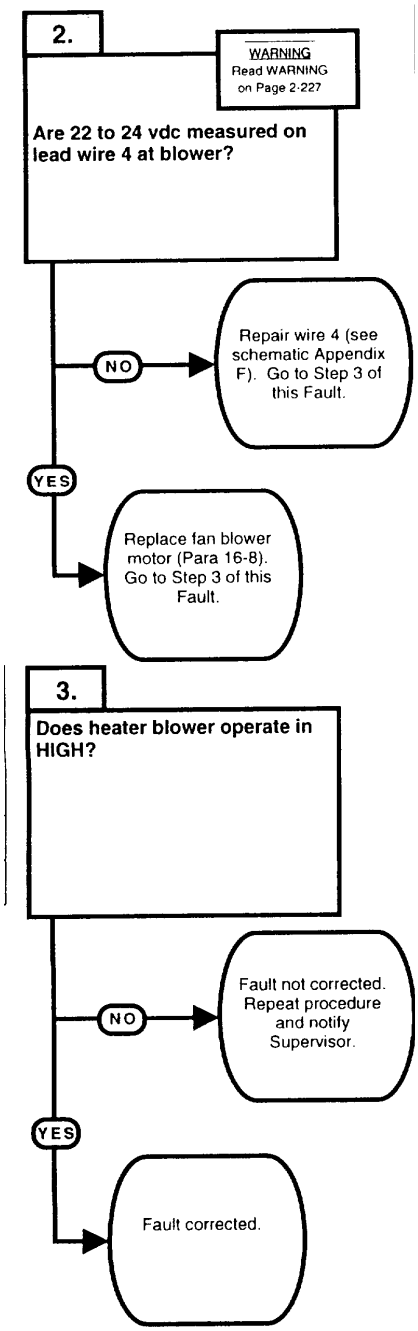

KNOWN INFO
Heater operates in LOW. Heater blower switch OK. Lead wire 4 OK. Fan blower motor OK.
POSSIBLE PROBLEMS

TEST OPTIONS
Verify repair.
REASON FOR QUESTION
If heater blower operates, fault has been corrected.

www.truck-freeworkshop.com

WARNING

Remove all jewelry such as rings, dog tags, bracelets, etc. If jewelry contacts battery terminal, a direct short may result in instant heating of tools, damage to equipment, and injury or death to personnel.

VOLTAGE TEST

(1) Remove heater housing cover (Para 16-8).
(2) Disconnect lead wire 4 from blower.
(3) Set multimeter select switch to VOLTS DC.
(4) Connect positive (+) multimeter lead to lead wire 4.
(5) Connect negative (-) multimeter lead to a known good ground.
(6) Set MAIN POWER switch to ON position (TM 10-3930-669-10).
(7) Set engine switch to ignition position (TM 10-3930-669-10).
  (a) If there are not 22 to 24 vdc present, perform Steps (8) and (9) below and repair wire 4 (see schematic Appendix F).
  (b) If there are 22 to 24 vdc present, perform Steps (8) and (9) below and replace fan blower motor (Para 16-8).
(8) Set engine switch to off position.
(9) Set MAIN POWER switch to OFF position.
(10) Install heater housing cover.

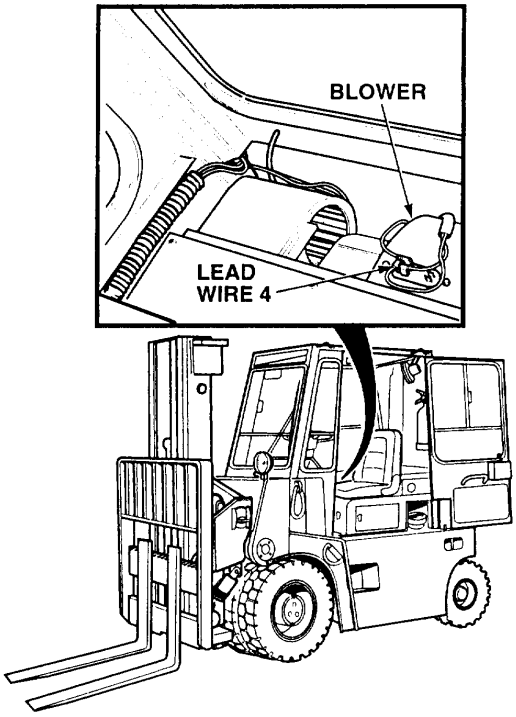

VERIFY REPAIR

(1) Set MAIN POWER switch to ON position (TM 10-3930-669-10).
(2) Set engine switch to ignition position.
(3) Set heater blower switch to position.
  (a) If heater blower does not operate in HIGH fault not corrected. Perform Steps (4) through (6) below. Repeat procedure and notify Supervisor.
  (b) If heater blower operates in HIGH fault corrected.
(4) Set heater blower switch to OFF position.
(5) Set engine switch to off position.
(6) Set MAIN POWER switch to OFF position.

www.truck-freeworkshop.com

2-14. ELECTRICAL SYSTEM TROUBLESHOOTING (CONT).

19. GLOW PLUG INDICATOR DOES NOT OPERATE.

INITIAL SETUP

Tools and Special Tools
- Tool Kit, General Mechanic's: Automotive (Item 1, Appendix B)
- Multimeter (Item 2, Appendix B)
- STE/ICE-R (Optional) (Item 14, Appendix B)

References
- TM 10-3930-669-10

Equipment Condition
- Engine OFF (TM 10-3930-669-10)
- MAIN POWER switch OFF (TM 10-3930-669-10)
- Parking brake applied (TM 10-3930-669-10)
- Wheels chocked (TM 10-3930-669-10)

KNOWN INFO
24 vdc circuits operate.

POSSIBLE PROBLEMS
Fuse 4 faulty. Indicator wire 30 is faulty. Relay R6 ground wire faulty. Indicator ground wire faulty. Wire 7 faulty. Terminal 85 ground wire faulty. Relay R6, wire 30, terminal 30 faulty. Relay R6, wire 30, terminal 87 faulty. Wire 29 faulty. Glow plug switch faulty. Wire 31 faulty.

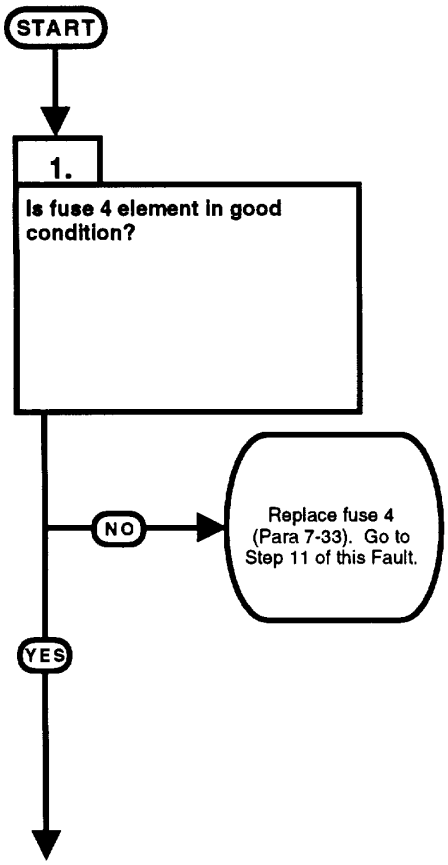

TEST OPTIONS
Visual test.
REASON FOR QUESTION
If element is broken, fuse 4 is faulty.

www.truck-freeworkshop.com

VISUAL TEST
(1) Remove fuse 4 (Para 7-33). (2) Check element in fuse 4. (a) If element is broken, replace fuse 4 (Para 7-33). (b) If element is not broken, fuse 4 is OK. (4) Install fuse 4.

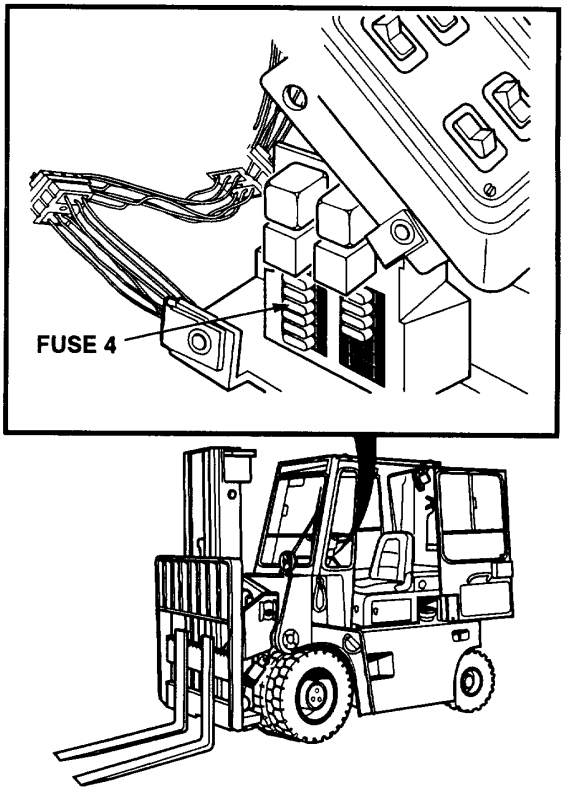

www.truck-freeworkshop.com

19. GLOW PLUG INDICATOR DOES NOT OPERATE (CONT).

KNOWN INFO
24 vdc circuits operate. Fuse 4 OK.
POSSIBLE PROBLEMS
Indicator wire 30 is faulty. Relay R6 ground wire faulty. Indicator ground wire faulty. Wire 7 faulty. Terminal 85 ground wire faulty. Relay R6, wire 30, terminal 30 faulty. Relay R6, wire 30, terminal 87 faulty. Wire 29 faulty. Glow plug switch faulty. Wire 31 faulty.

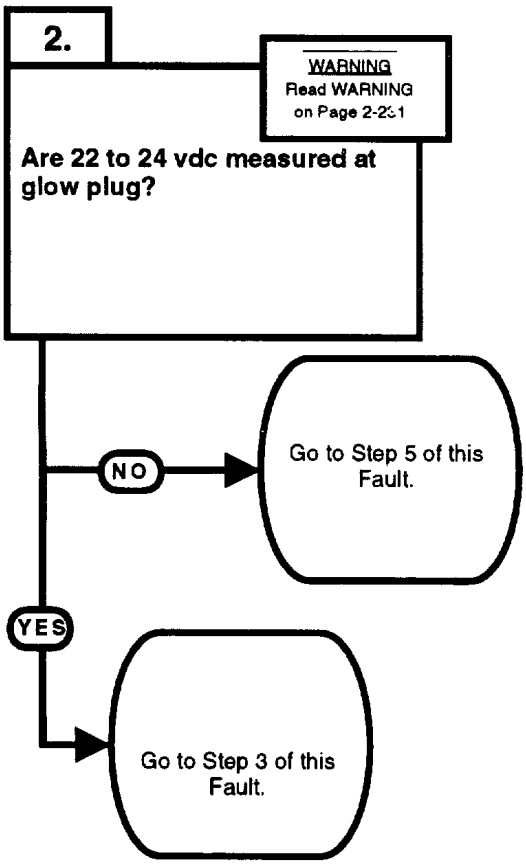

TEST OPTIONS
Voltage test. STE/ICE-R #89.
REASON FOR QUESTION
If 22 to 24 vdc are not present, fault is somewhere else. If 22 to 24 vdc are present, indicator circuit is faulty.

www.truck-freeworkshop.com

WARNING

Remove all jewelry such as rings, dog tags, bracelets, etc. If jewelry contacts battery terminal, a direct short may result in instant heating of tools, damage to equipment, and injury or death to personnel.

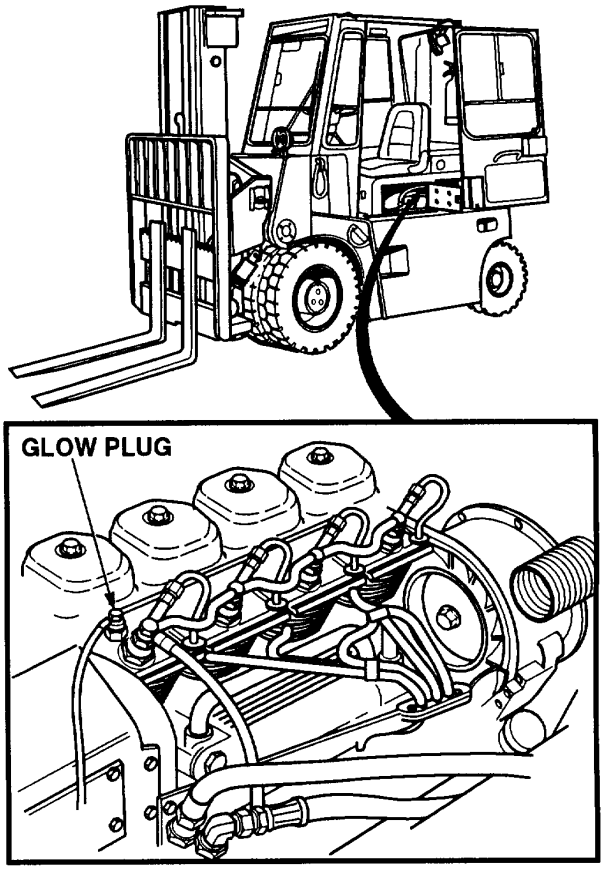

VOLTAGE TEST

(1) Open engine access panel (TM 10-3930-669-10).
(2) Set multimeter select switch to VOLTS DC.
(3) Connect positive (+) multimeter lead to glow plug.
(4) Connect negative (-) multimeter lead to a known good ground.
(5) Set MAIN POWER switch to ON position (TM 10-3930-669-10).
(6) Set engine switch to ignition position (TM 10-3930-669-10).
(7) Depress glow plug switch (TM 10-3930-669-10).
  (a) If there are not 22 to 24 vdc present, perform Steps (8) through (10) below and go to Step 5 of this Fault.
  (b) If there are 22 to 24 vdc present, perform Steps (8) through (10) below and go to Step 3 of this Fault.
(8) Set engine switch to off position.
(9) Set MAIN POWER switch to OFF position.
(10) Close engine access panel.

www.truck-freeworkshop.com

KNOWN INFO
24 vdc circuits operate. Fuse 4 OK. Indicator wire 30 OK.
POSSIBLE PROBLEMS
Relay R6 ground wire faulty. Indicator ground wire faulty. Wire 7 faulty. Terminal 85 ground wire faulty. Relay R6, wire 30, terminal 30 faulty. Relay R6, wire 30, terminal 87 faulty. Wire 29 faulty. Glow plug switch faulty. Wire 31 faulty.

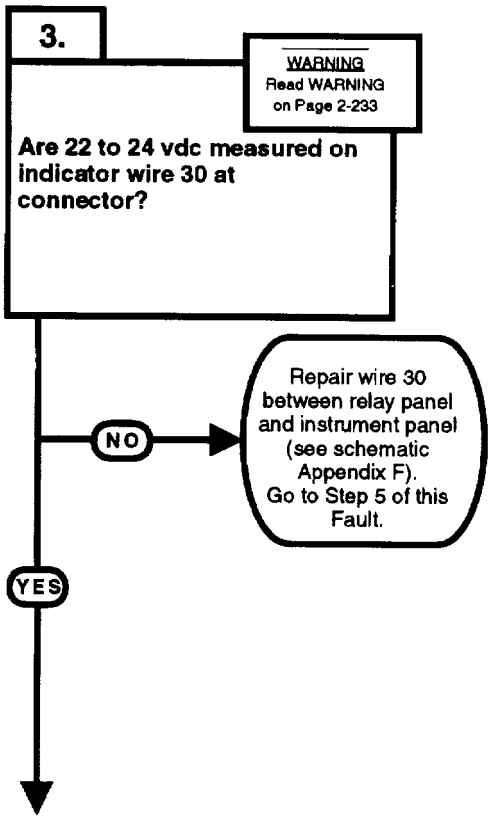

TEST OPTIONS
Voltage test. STEACE-R #89.
REASON FOR QUESTION
This question eliminates a possible problem or group of possible problems determining where troubleshooting continues.

www.truck-freeworkshop.com

WARNING

Remove all jewelry such as rings, dog tags, bracelets, etc. If jewelry contacts battery terminal, a direct short may result in instant heating of tools, damage to equipment, and injury or death to personnel.

VOLTAGE TEST

(1) Remove instrument panel (Para 7-8).
(2) Disconnect indicator wire 30 from connector.
(3) Set multimeter select switch to VOLTS DC.
(4) Connect positive (+) multimeter lead to indicator wire 30 terminal.
(5) Connect negative (-) multimeter lead to a known good ground.
(6) Set MAIN POWER switch to ON position (TM 10-3930-669-10).
(7) Set engine switch to ignition position (TM 10-3930-669-10).
(8) Depress glow plug switch (TM 10-3930-669-10).
    (a) If there are not 22 to 24 vdc present, perform Steps (9) through (11), repair wire 30 (see schematic Appendix F) and go to Step 5 of this fault.
    (b) If there are 22 to 24 vdc present, perform Steps (9) and (10) below and go to Step 4 of this fault.
(9) Set engine switch to off position.
(10) Set MAIN POWER switch to OFF position.
(11) Connect indicator wire 30 on connector.

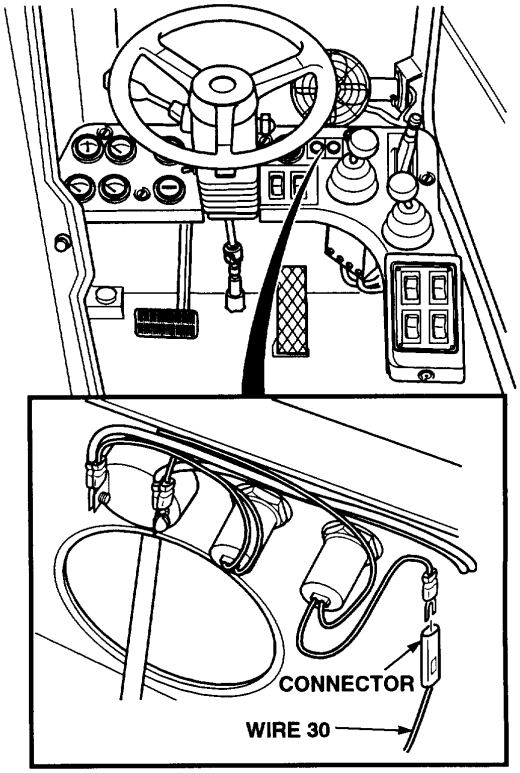

www.truck-freeworkshop.com

19. GLOW PLUG INDICATOR DOES NOT OPERATE (CONT).

KNOWN INFO
24 vdc circuits operate. Fuse 4 OK. Indicator wire 30 OK. Relay R6 ground wire OK.
POSSIBLE PROBLEMS
Indicator ground wire faulty. Wire 31 faulty. Terminal 85 ground wire faulty. Relay R6, wire 30, terminal 30 faulty. Relay R6, wire 30, terminal 87 faulty. Wire 29 faulty. Glow plug switch faulty. Wire 31 faulty.

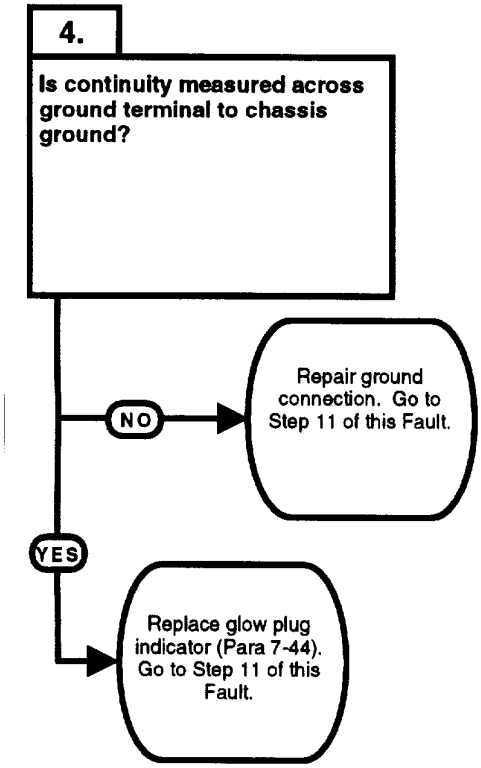

TEST OPTIONS
Continuity test. STE/ICE-R #91. REASON FOR QUESTION If continuity is not present, connector is faulty. If connector is OK, glow plug indicator is faulty.

www.truck-freeworkshop.com

CONTINUITY TEST
(1) Disconnect indicator lead from connector. (2) Set multimeter select switch to OHMS. (3) Connect positive (+) multimeter lead to connector indicator wire 30 terminal. (4) Connect negative (-) multimeter lead to connector indicator lead terminal. (a) If there is no continuity, repair connector. (b) If there is continuity, replace glow plug indicator (Para 7-44). (5) Install indicator lead and indicator wire 30 on connector. (6) Install instrument panel (Para 7-8).

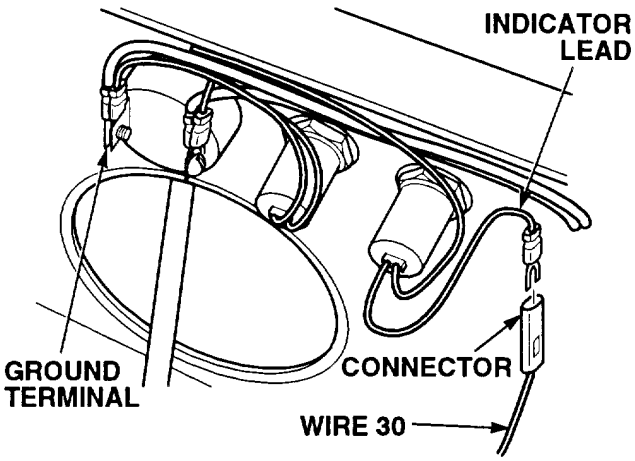

www.truck-freeworkshop.com

19. GLOW PLUG INDICATOR DOES NOT OPERATE (CONT).

KNOWN INFO

24 vdc circuits operate.
Fuse 4 OK.
Indicator wire 30 OK.
Relay R6 ground wire OK.
Indicator ground wire OK.

POSSIBLE PROBLEMS

Wire 31 faulty.
Terminal 85 ground wire faulty.
Relay R6, wire 7, terminal 30 faulty.
Relay R6, wire 30, terminal 87 faulty.
Wire 29 faulty.
Glow plug switch faulty.
Wire 7 faulty.

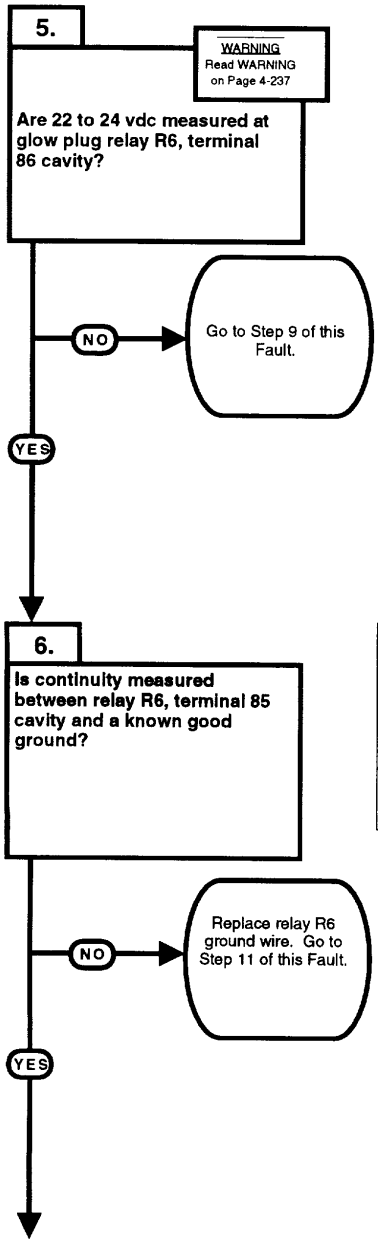

TEST OPTIONS

Voltage test.
STE/ICE-R #89.

REASON FOR QUESTION

This question eliminates a possible problem or group of possible problems determining where troubleshooting continues.

KNOWN INFO

24 vdc circuits operate.
Fuse 4 OK.
Indicator wire 30 OK.
Relay R6 ground wire OK.
Indicator ground wire OK.
Wire 31 OK.

POSSIBLE PROBLEMS

Terminal 85 ground wire faulty.
Relay R6, wire 7, terminal 30 faulty.
Relay R6, wire 30, terminal 87 faulty.
Wire 29 faulty.
Glow plug switch faulty.
Wire 7 faulty.

TEST OPTIONS

Continuity test.
STE/ICE-R #91.

REASON FOR QUESTION

If continuity is not present, relay R6 ground wire is faulty.

www.truck-freeworkshop.com

WARNING

Remove all jewelry such as rings, dog tags, bracelets, etc. If jewelry contacts battery terminal, a direct short may result in instant heating of tools, damage to equipment, and injury or death to personnel.

VOLTAGE TEST

(1) Remove engine ventilation panel (Para 6-2).
(2) Remove relay R6 (Para 7-33).
(3) Set multimrneter select switch to VOLTS DC.
(4) Connect positive (+) multimeter lead to glow plug relay R6, terminal 86 cavity.
(5) Connect negative (-) multimeter lead to a known good ground.
(6) Set MAIN POWER switch to ON position (TM 10-3930-669-10).
(7) Set engine switch to ignition position (TM 10-3930-669-10).
(8) Depress glow plug switch (TM 10-3930-669-10).
  (a) If there are not 22 to 24 vdc present, perform Steps (9) and (10) below and go to Step 9 of this Fault.
  (b) If there are 22 to 24 vdc present, perform Steps (9) and (10) below and go to Step 6 of this Fault.
(9) Set engine switch to off position.
(10) Set MAIN POWER switch to OFF position.

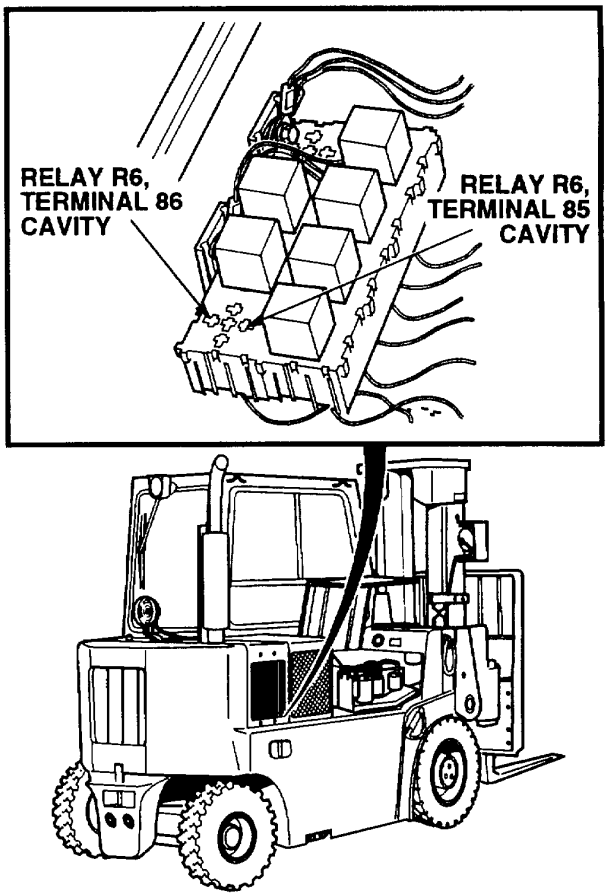

CONTINUITY TEST

(1) Set multimeter select switch to OHMS.
(2) Check continuity between relay R6, terminal 85 cavity and a known good ground.
  (a) If there is no continuity, replace relay R6 ground wire (See schematic Appendix F).
  (b) If there is continuity, relay R6 ground wire is OK.

www.truck-freeworkshop.com

19. GLOW PLUG INDICATOR DOES NOT OPERATE (CONT).

KNOWN INFO
24 vdc circuits operate. Fuse 4 OK. Indicator wire 30 OK. Relay R6 ground wire OK. Indicator ground wire OK. Wire 31 OK. Terminal 85 ground wire OK.
POSSIBLE PROBLEMS
Relay R6, wire 7, terminal 30 faulty. Relay R6, wire 30, terminal 87 faulty. Wire 7 faulty. Wire 29 faulty. Glow plug switch faulty.

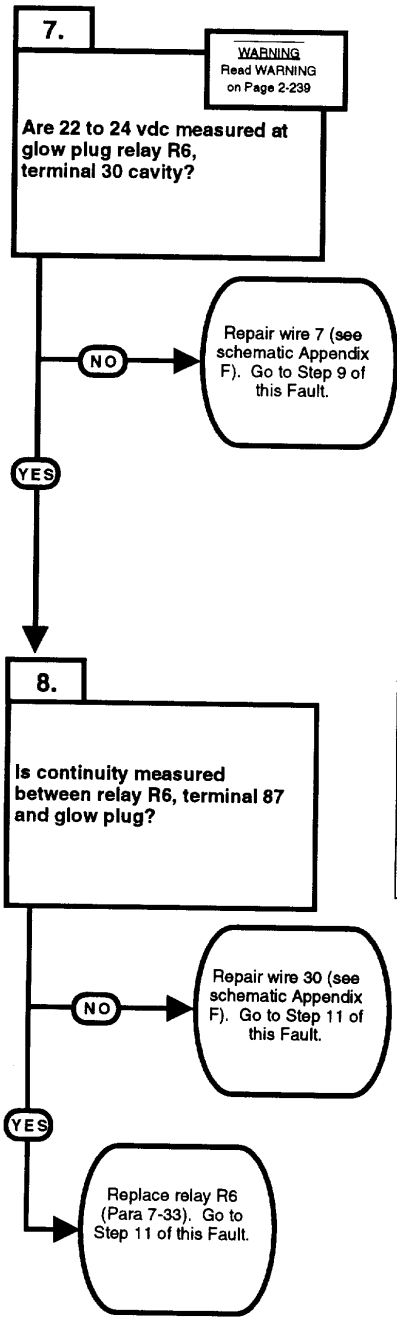

TEST OPTIONS
Voltage test. STE/ICE-R #89. REASON FOR QUESTION If 22 to 24 is not present, wire 7 is faulty.

KNOWN INFO
24 vdc circuits operate. Fuse 4 OK. Indicator wire 30 OK. Relay R6 ground wire OK. Indicator ground wire OK. Wire 31 OK. Terminal 85 ground wire OK. Relay R6, wire 7, terminal 30 OK. Wire 7 OK.
POSSIBLE PROBLEMS
Relay R6, wire 30, terminal 87 faulty. Wire 29 faulty. Glow plug switch faulty.

TEST OPTIONS
Continuity test. STE/ICE-R #91.
REASON FOR QUESTION
If continuity is not present, wire 30 is faulty. If wire 30 is OK, relay R6 is faulty.

www.truck-freeworkshop.com

WARNING

Remove all jewelry such as rings, dog tags, bracelets, etc. If jewelry contacts battery terminal, a direct short may result in instant heating of tools, damage to equipment, and injury or death to personnel.

VOLTAGE TEST

(1) Set multimeter select switch to VOLTS DC.
(2) Connect positive (+) multimeter lead to glow plug relay R6, terminal 30 cavity.
(3) Connect negative (-) multimeter lead to a known good ground.
(4) Set MAIN POWER switch to ON position (TM 10-3930-669-10).
  (a) If there are not 22 to 24 vdc present, perform Step (5) below, repair wire 7 (see schematic Appendix F) and go to Step 9 of this fault.
  (b) If there are 22 to 24 vdc present, wire 7 is OK.
(5) Set MAIN POWER switch to OFF position.

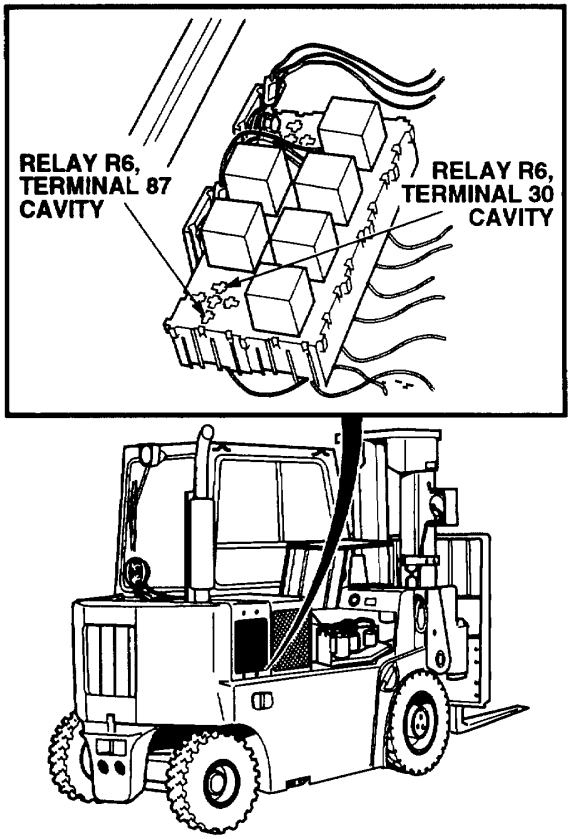

CONTINUITY TEST

(1) Ground wire 30 glow plug terminal.
(2) Set multimeter select switch to OHMS.
(3) Check continuity between relay R6, terminal 87 and glow plug terminal.
  (a) If there is no continuity, repair wire 30 (see schematic Appendix F).
  (b) If there is continuity, replace relay R6.
(4) Install relay R6 (Para 7-3).
(5) Install engine ventilation panel (Para 6-2).

www.truck-freeworkshop.com

19. GLOW PLUG INDICATOR DOES NOT OPERATE (CONT).

KNOWN INFO
24 vdc circuits operate. Fuse 4 OK. Indicator wire 30 OK. Relay R6 ground wire OK. Indicator ground wire OK. Wire 7 OK. Terminal 85 ground wire OK. Relay R6, wire 7, terminal 30 OK. Relay R6, wire 30, terminal 87 OK. Wire 31 OK.
POSSIBLE PROBLEMS
Wire 29 faulty. Glow plug switch faulty.

KNOWN INFO
24 vdc circuits operate. Fuse 4 OK. Indicator wire 30 OK. Relay R6 ground wire OK. Indicator ground wire OK. Wire 7 OK. Terminal 85 ground wire OK. Relay R6, wire 7, terminal 30 OK. Relay R6, wire 30, terminal 87 OK. Wire 31 OK. Wire 29 OK.
POSSIBLE PROBLEMS
Glow plug switch faulty.

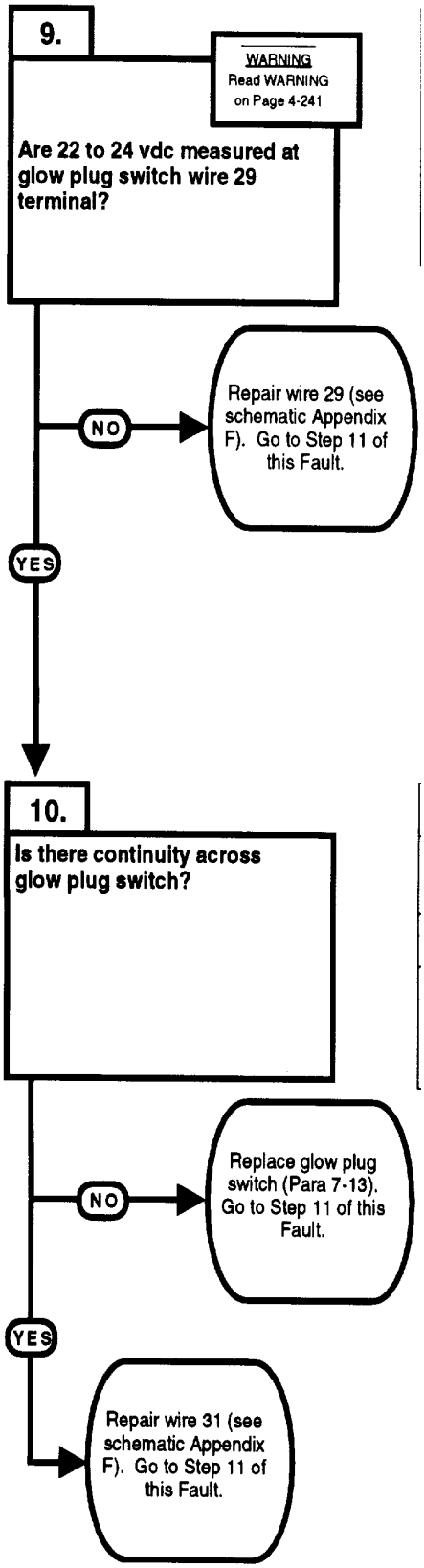

TEST OPTIONS
Voltage test. STE/ICE-R #89.
REASON FOR QUESTION
If 22 to 24 vdc are not present, wire 29 is faulty.

TEST OPTIONS
Continuity test. STE/ICE-R #91.
REASON FOR QUESTION
If continuity is not present, glow plug switch is faulty. If glow plug switch is OK, wire 31 is faulty.

www.truck-freeworkshop.com

WARNING

Remove all jewelry such as rings, dog tags, bracelets, etc. If jewelry contacts battery terminal, a direct short may result in instant heating of tools, damage to equipment, and injury or death to personnel.

VOLTAGE TEST

(1) Remove lower and upper column covers (Para 7-21).
(2) Set multimeter select switch to VOLTS DC.
(3) Connect positive (+) multimeter lead to glow plug switch wire 29 terminal.
(4) Connect negative (-) multimeter lead to a known good ground.
(5) Set MAIN POWER switch to ON position (TM 10-3930-669-10).
(6) Set engine switch to ignition position.
(a) If there are not 22 to 24 vdc present, perform Steps (7) and (8) below and repair or replace wire 29 (see schematic Appendix F).
(b) If there are 22 to 24 vdc present, wire 29 is OK.
(7) Set engine switch to off position.
(8) Set MAIN POWER switch to OFF position.

CONTINUITY TEST

(1) Set multimeter select switch to OHMS.
(2) Depress glow plug switch.
(3) Check continuity across glow plug switch.
(a) If there is no continuity, replace glow plug switch (Para 7-13).
(b) If there is continuity, repair wire 31 (see schematic Appendix F).
(4) Install lower and upper column covers (Para 7-21).

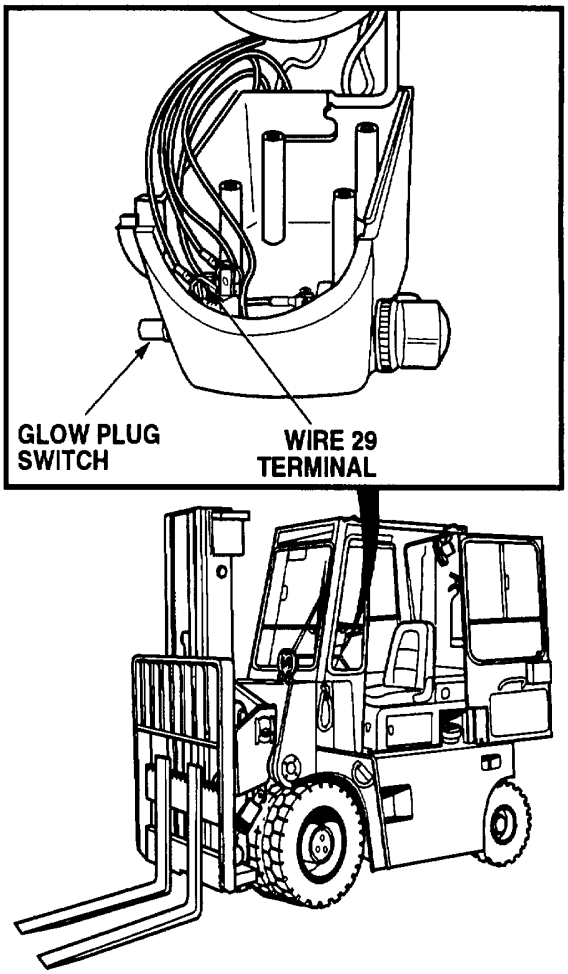

www.truck-freeworkshop.com

19. GLOW PLUG INDICATOR DOES NOT OPERATE (CONT).

KNOWN INFO
24 vdc circuits operate. Fuse 4 OK. Indicator wire 30 OK. Relay R6 ground wire OK. Indicator ground wire OK. Wire 7 OK. Terminal 85 ground wire OK. Relay R6, wire 7, terminal 30 OK. Relay R6, wire 30, terminal 87 OK. Wire 29 OK. Glow plug switch OK. Wire 31 OK.
POSSIBLE PROBLEMS

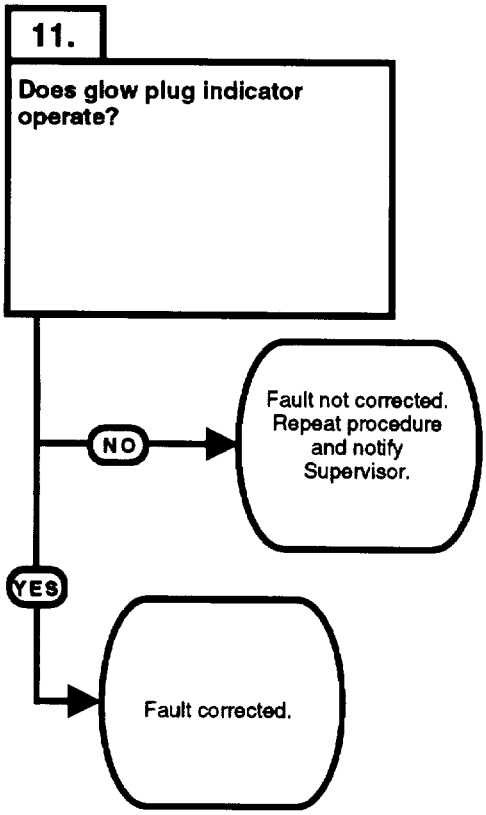

TEST OPTIONS
Verify repair.
REASON FOR QUESTION
If glow plug indicator operates, fault has been corrected.

www.truck-freeworkshop.com

VERIFY REPAIR
(1) Set MAIN POWER switch to ON position (TM 10-3930-669-10). (2) Set engine switch to ignition position (TM 10-3930-669-10). (3) Depress glow plug switch (TM 10-3930-669-10). (4) Observe glow plug indicator. (a) If glow plug indicator does not operate, fault not corrected. Perform Steps (5) and (6) below. Repeat procedure and notify Supervisor. (b) If glow plug indicator operates, fault corrected. (5) Set engine switch to off position. (6) Set MAIN POWER switch to OFF position.

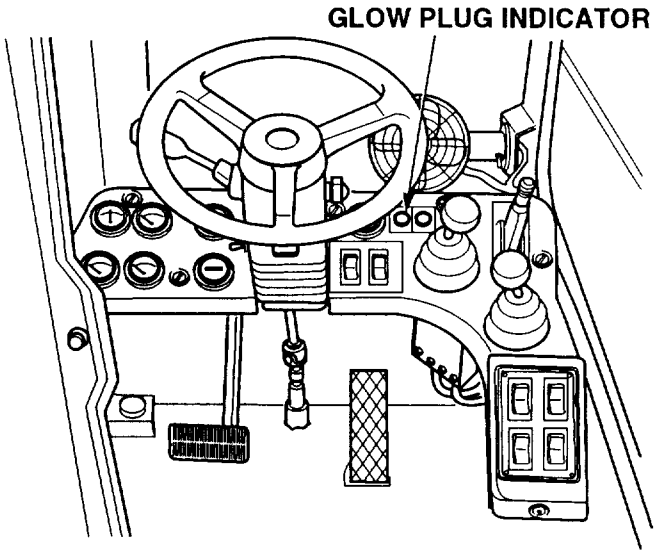

www.truck-freeworkshop.com

2-14. ELECTRICAL SYSTEM TROUBLESHOOTING (CONT).

20. BROKEN BELT BUZZER AND INDICATOR DO NOT OPERATE.

INITIAL SETUP

Tools and Special Tools
Tool Kit, General Mechanic's: Automotive (Item 1, Appendix B)
Multimeter (Item 2, Appendix B)
STE/ICE-R (Optional) (Item 14, Appendix B)

Equipment Condition
Engine OFF (TM 10-3930-669-10)
MAIN POWER switch OFF (TM 10-3930-669-10)
Parking brake applied (TM 10-3930-669-10)
Wheels chocked (TM 10-3930-669-10)

References
TM 10-3930-669-10

KNOWN INFO
Belt broken. 24 vdc circuits operate.
POSSIBLE PROBLEMS
Wire 6 faulty. Belt sensor faulty. Wire 8 faulty.

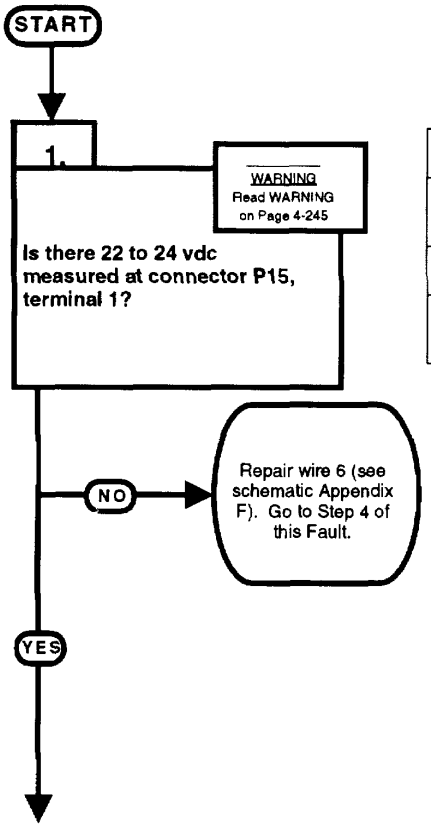

TEST OPTIONS
Voltage test. STEACE-R #89.
REASON FOR QUESTION
If 22 to 24 vdc are not present, wire 6 is faulty.

www.truck-freeworkshop.com

WARNING

Remove all jewelry such as rings, dog tags, bracelets, etc. If jewelry contacts battery terminal, a direct short may result in instant heating of tools, damage to equipment, and injury or death to personnel.

VOLTAGE TEST

(1) Remove engine ventilation panel (Para 6-2).
(2) Disconnect connector P15 from belt switch connector.
(3) Set multimeter select switch to VOLTS DC.
(4) Connect positive (+) multimeter lead to connector P15, terminal 1.
(5) Connect negative (-) multimeter lead to a known good ground.
(6) Set MAIN POWER switch to ON position (TM 10-3930-669-10).
(7) Set engine switch to ignition position (TM 10-3930-669-10).
  (a) If there are not 22 to 24 vdc present, perform Steps (8) and (9) below and repair wire 6 (see schematic Appendix F).
  (b) If there are 22 to 24 vdc present, wire 6 is OK.
(8) Set engine switch to off position.
(9) Set MAIN POWER switch to OFF position.

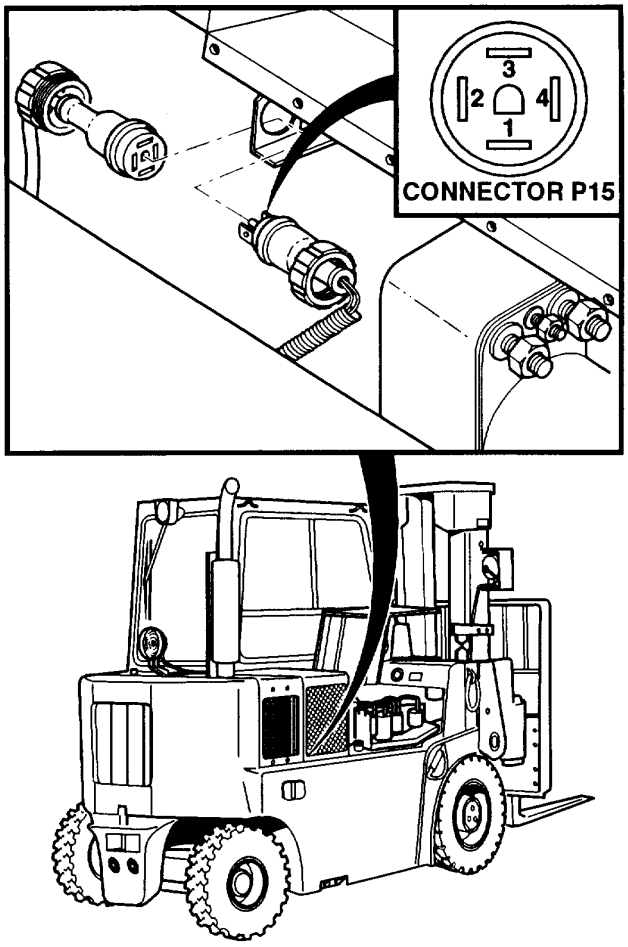

www.truck-freeworkshop.com

20. BROKEN BELT BUZZER AND INDICATOR DO NOT OPERATE (CONT).

KNOWN INFO
Belt broken. 24 vdc circuits operate. Wire 6 OK.
POSSIBLE PROBLEMS
Belt sensor faulty. Wire 8 faulty.

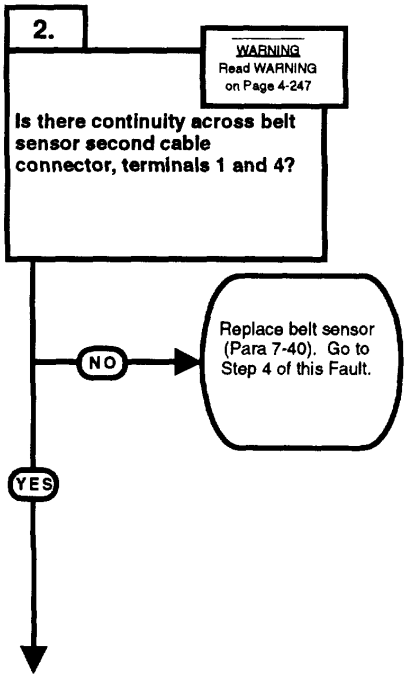

TEST OPTIONS
Continuity test. STE/ICE-R #91.
REASON FOR QUESTION
If continuity is not present, belt sensor is faulty.

www.truck-freeworkshop.com

WARNING

Remove all jewelry such as rings, dog tags, bracelets, etc. If jewelry contacts battery terminal, a direct short may result in instant heating of tools, damage to equipment, and injury or death to personnel.

CONTINUITY TEST

(1) Set multimeter select switch to OHMS.
(2) Check continuity across belt sensor connector, terminals 1 and 4.
  (a) If there is no continuity, replace belt sensor (Para 7-40).
  (b) If there is continuity, belt sensor is OK.
(3) Connect connector P15 on belt sensor connector.
(4) Install engine ventilation panel (Para 6-2).

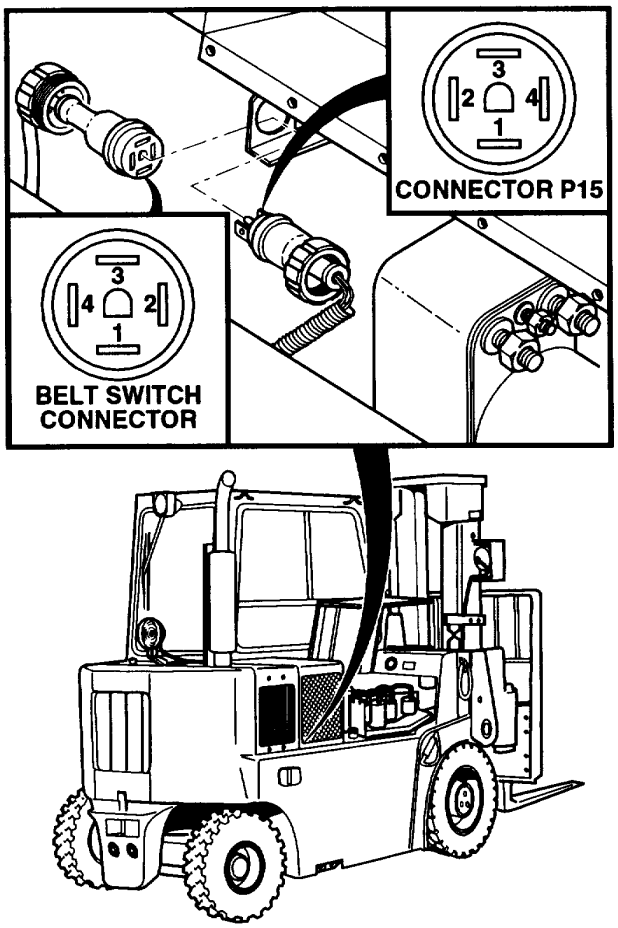

www.truck-freeworkshop.com

20. BROKEN BELT BUZZER AND INDICATOR DO NOT OPERATE (CONT).

KNOWN INFO
Belt broken. 24 vdc circuits operate. Wire 6 OK. Belt sensor OK.
POSSIBLE PROBLEMS
Wire 8 faulty.

TEST OPTIONS
Voltage test. STE/ICE-R #89.
REASON FOR QUESTION
If 22 to 24 vdc are not present, wire 8 is faulty. If 22 to 24 vdc are present, buzzer ground wire is faulty.

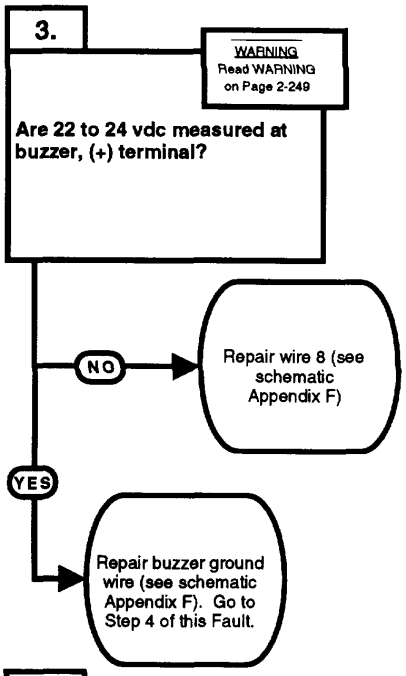

KNOWN INFO
Belt broken. 24 vdc circuits operate. Wire 6 OK. Belt sensor OK. Wire 8 OK.
POSSIBLE PROBLEMS

TEST OPTIONS
Verify repair.
REASON FOR QUESTION
If broken belt buzzer operates, fault has been corrected.

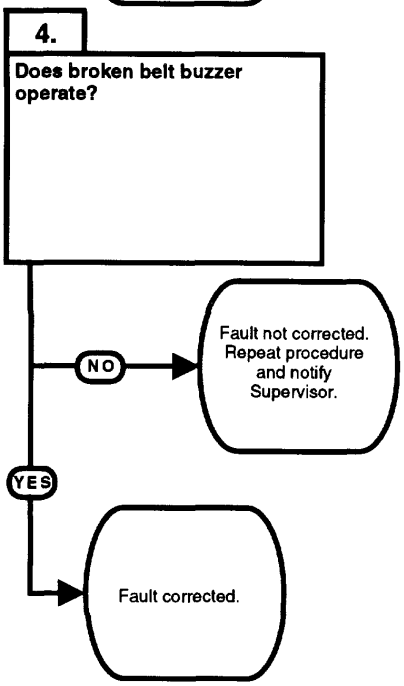

www.truck-freeworkshop.com

WARNING

Remove all jewelry such as rings, dog tags, bracelets, etc. If jewelry contacts battery terminal, a direct short may result in instant heating of tools, damage to equipment, and injury or death to personnel.

VOLTAGE TEST

(1) Remove instrument panel (Para 7-8).
(2) Set multimeter select switch to VOLTS DC.
(3) Connect positive (+) multimeter lead to broken belt buzzer, (+) terminal.
(4) Connect negative (-) multimeter lead to a known good ground.
(5) Set MAIN POWER switch to ON position (TM 10-3930-669-10).
(6) Set engine switch to ignition position (TM 10-3930-669-10).
  (a) If there are not 22 to 24 vdc present, perform Steps (7) through (9) below, repair wire 8 (see schematic Appendix F) and go to Step 4 of this Fault.
  (b) If there are 22 to 24 vdc present, perform Steps (7) through (9) below and repair buzzer ground wire (see schematic Appendix F).
(7) Set engine switch to off position.
(8) Set MAIN POWER switch to OFF position.
(9) Install instrument panel (Para 7-8).

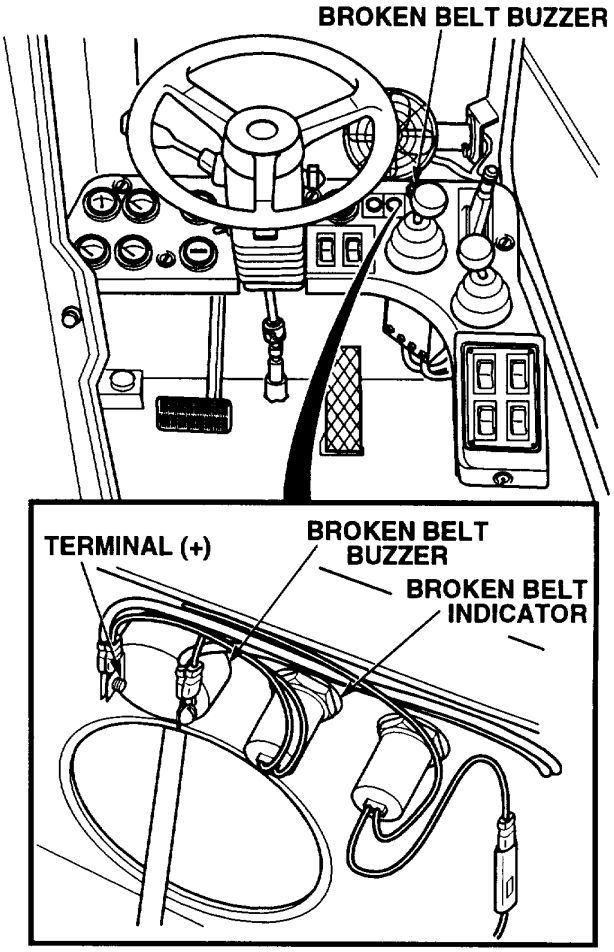

VERIFY REPAIR

(1) Set MAIN POWER switch to ON position (TM 10-3930-669-10).
(2) Set engine switch to ignition position (TM 10-3930-669-10).
(3) Listen for buzz from broken belt buzzer.
  (a) If buzzer does not operate, fault not corrected. Perform Steps (4) and (5) below and repeat procedure and notify Supervisor.
  (b) If buzzer operates, fault corrected.
(4) Set engine switch to off position.
(5) Set MAIN POWER switch to OFF position.

www.truck-freeworkshop.com

2-14. ELECTRICAL SYSTEM TROUBLESHOOTING (CONT).

21. TRANSMISSION DOES NOT OPERATE IN FORWARD.

INITIAL SETUP

Tools and Special Tools
Tool Kit, General Mechanic's: Automotive (Item 1, Appendix B)
Multimeter (Item 2, Appendix B)
STE/ICE-R (Optional) (Item 14, Appendix B)

Equipment Condition
Engine OFF (TM 10-3930-669-10)
MAIN POWER switch OFF (TM 10-3930-669-10)
Parking brake applied (TM 10-3930-669-10)
Wheels chocked (TM 10-3930-669-10)

References
TM 10-3930-669-10

NOTE

The following troubleshooting procedures cover the transmission forward control circuit, but the general steps can apply to the transmission reverse control circuit.

KNOWN INFO
Transmission operates in reverse.
POSSIBLE PROBLEMS
Forward control solenoid faulty. Wire 35 faulty. Forward control switch faulty. Wire 39 faulty.

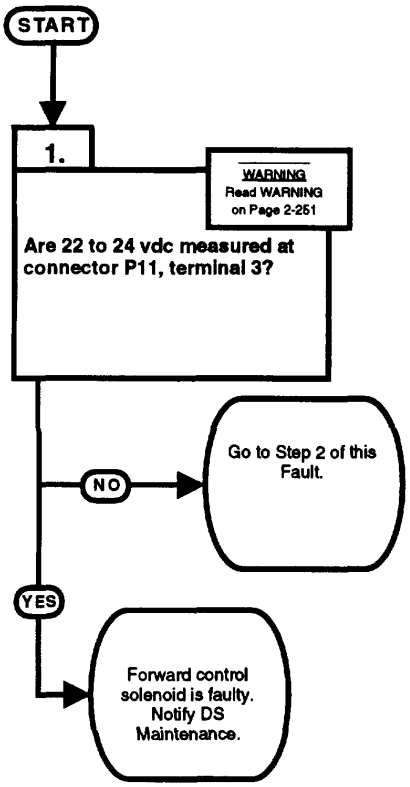

TEST OPTIONS
Voltage test STE/ICE-R #89.
REASON FOR QUESTION
If 22 to 24 vdc are present forward control solenoid is faulty.

www.truck-freeworkshop.com

WARNING

Remove all jewelry such as rings, dog tags, bracelets, etc. If jewelry contacts battery terminal, a direct short may result in instant heating of tools, damage to equipment, and injury or death to personnel.

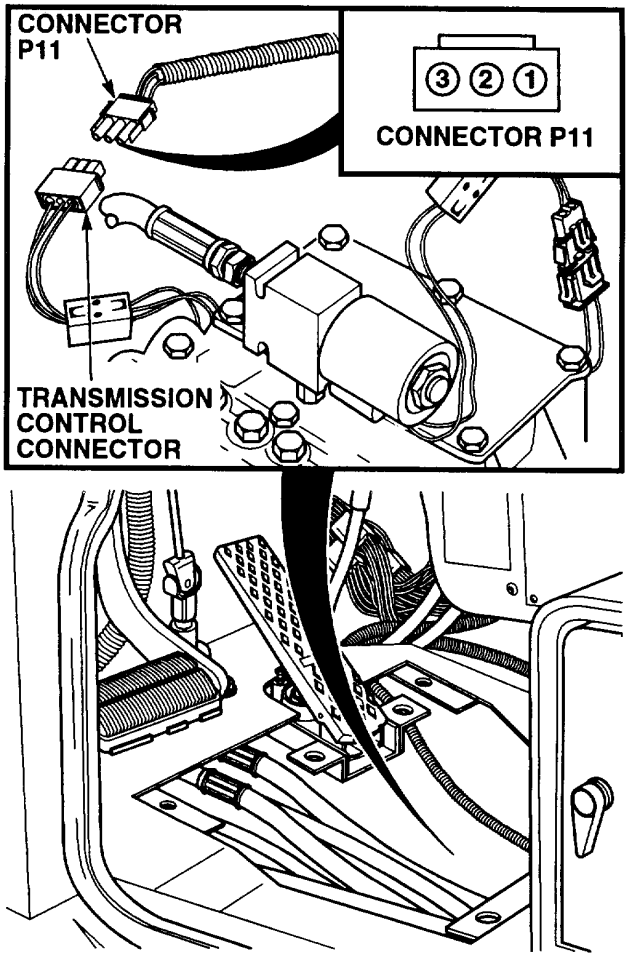

VOLTAGE TEST

(1) Remove floor plate (Para 15-12).
(2) Disconnect connector P11 from transmission control connector.
(3) Set multimeter select switch to VOLTS DC.
(4) Connect positive (+) multimeter lead to connector P11, terminal 3.
(5) Connect negative (-) multimeter lead to a known good ground.
(6) Set MAIN POWER switch to ON position (TM 10-3930-669-10).
(7) Set engine switch to ignition position (TM 10-3930-669-10).
(8) Set transmission control lever to forward position (TM 10-3930-669-10).
    (a) If there are not 22 to 24 vdc present, perform Steps (9) through (12) below and go to Step 2 of this Fault.
    (b) If there are 22 to 24 vdc present, forward control solenoid is faulty. Perform Steps (9) through (12) below and Notify DS Maintenance.
(9) Set transmission control lever to neutral position.
(10) Set engine switch to off position.
(11) Set MAIN POWER switch to OFF position.
(12) Install floor plate (Para 15-12).

www.truck-freeworkshop.com

21. TRANSMISSION DOES NOT OPERATE IN FORWARD (CONT).

KNOWN INFO
Transmission operates in reverse. Forward control solenoid OK.
POSSIBLE PROBLEMS
Wire 35 faulty. Forward control switch faulty. Wire 39 faulty.

2. Are 22 to 24 vdc measured at forward control switch wire 35 terminal?

WARNING
Read WARNING on Page 2-253

NO → Repair wire 35 to forward control switch (see schematic Appendix F). Go to Step 4 of this Fault.

YES → 3.

TEST OPTIONS
Voltage test. STE/ICE-R #89.
REASON FOR QUESTION
If 22 to 24 vdc are not present, wire 35 is faulty.

KNOWN INFO
Transmission operates in reverse. Forward control solenoid OK. Wire 35 OK.
POSSIBLE PROBLEMS
Forward control switch faulty. Wire 39 faulty.

3. Is there continuity across forward control switch?

NO → Replace forward control switch (Para 7-21). Go to Step 4 of this Fault.

YES → Repair wire 39 (see schematic Appendix F). Go to Step 4 of this Fault.

TEST OPTIONS
Continuity test. STE/ICE-R #91.
REASON FOR QUESTION
If continuity is not present, forward control switch is faulty. If continuity is present wire 39 is faulty.

www.truck-freeworkshop.com

VOLTAGE TEST

(1) Remove transmission shift lever (Para 7-20).
(2) Set multimeter select switch to VOLTS DC.
(3) Connect positive (+) multimeter lead to forward control switch wire 35 terminal.
(4) Connect negative (-) multimeter lead to a known good ground.
(5) Set MAIN POWER switch to ON position (TM 10-3930-669-10).
(6) Set engine switch to ignition position (TM 10-3930-669-10).
  (a) If there are not 22 to 24 vdc present, perform Steps (7) and (8) below and repair wire 35 to forward control switch (see schematic Appendix F).
  (b) If there are 22 to 24 vdc present, wire 35 is OK.
(7) Set engine switch to off position.
(8) Set MAIN POWER switch to OFF position.

CONTINUITY TEST

(1) Set multimeter select switch to OHMS.
(2) Check continuity between forward control switch wire 35 and 39 terminals.
(3) Depress forward control switch.
  (a) If there is no continuity, replace forward control switch (Para 7-21).
  (b) If there is continuity, repair wire 39 (see schematic Appendix F) and go to Step 4 of this Fault.
(4) Install transmission shift lever (Para 7-20).

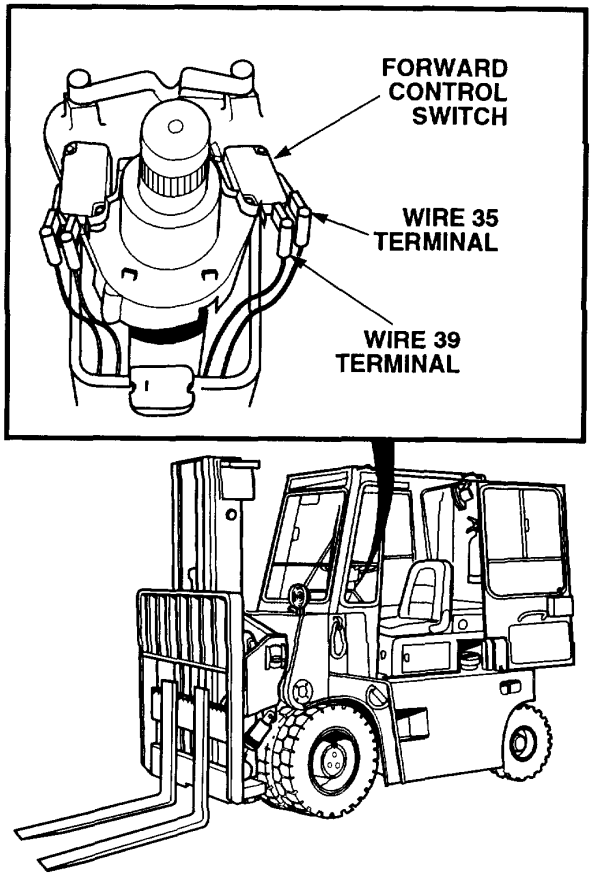

www.truck-freeworkshop.com

21. TRANSMISSION DOES NOT OPERATE IN FORWARD (CONT).

KNOWN INFO
Transmission operates in reverse. Forward control solenoid OK. Wire 35 OK. Forward control switch OK. Wire 39 OK.
POSSIBLE PROBLEMS

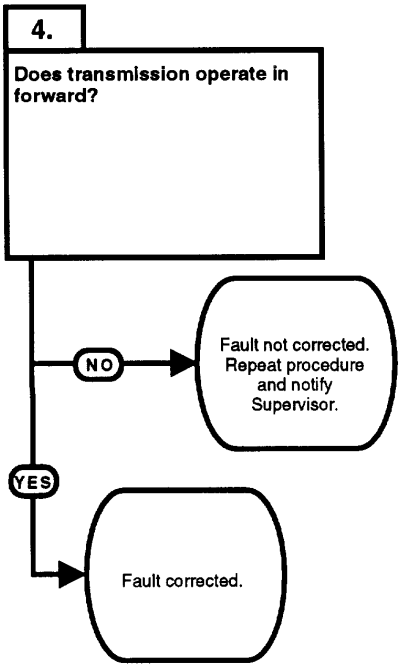

TEST OPTIONS
Verify repair.
REASON FOR QUESTION
If transmission operates in forward, fault has been corrected.

www.truck-freeworkshop.com

VERIFY REPAIR

(1) Start engine (TM 10-3930-669-10).
(2) Set transmission control lever to forward position.
(3) Operate forklift in forward and observe operation.
  (a) If forklift does not operate in forward, fault not corrected. Perform Steps (4) and (5) below and repeat procedure and notify Supervisor.
  (b) If forklift operates in forward, fault corrected.
(4) Set transmission control lever to neutral position.
(5) Shut down engine.

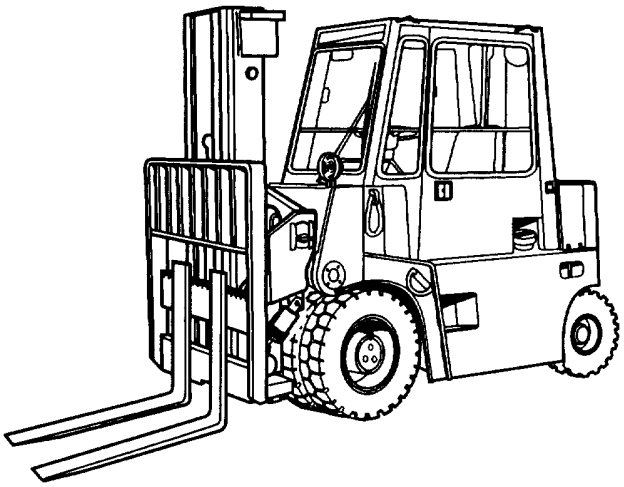

www.truck-freeworkshop.com

2-14. ELECTRICAL SYSTEM TROUBLESHOOTING (CONT).

22. TRANSMISSION DOES NOT OPERATE IN FORWARD OR REVERSE.

INITIAL SETUP

Tools and Special Tools
Tool Kit, General Mechanic's: Automotive (Item 1, Appendix B)
Multimeter (Item 2, Appendix B)
STE/ICE-R (Optional) (Item 14, Appendix B)

Equipment Condition
Engine OFF (TM 10-3930-669-10)
MAIN POWER switch OFF (TM 10-3930-669-10)
Parking brake applied (TM 10-3930-669-10)
Wheels chocked (TM 10-3930-669-10)

References
TM 10-3930-669- 10

KNOWN INFO

All 24 Vdc circuits operate.
Fuse 3 OK.
HIGH Range Indicator operates.

POSSIBLE PROBLEMS

Master cylinder pressure switch faulty.
Wire 10B faulty.
Diode module DM1 faulty.
Wire 10 faulty.
Interlock switch faulty.
Wire 10A faulty.

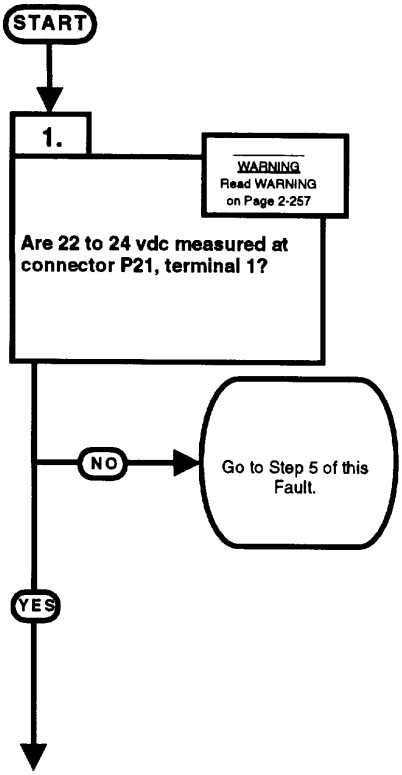

TEST OPTIONS

Voltage test.
STE/ICE-R #89.

REASON FOR QUESTION

This question eliminates a possible problem or group of possible problems determining where troubleshooting continues.

www.truck-freeworkshop.com

WARNING

Remove all jewelry such as rings, dog tags, bracelets, etc. If jewelry contacts battery terminal, a direct short may result in instant heating of tools, damage to equipment, and injury or death to personnel.

VOLTAGE TEST

(1) Open engine access panel (TM 10-3930-669-10).
(2) Disconnect connector P21 from master cylinder pressure switch connector.
(3) Set multimeter select switch to VOLTS DC.
(4) Connect positive (+) multimeter lead to connector P21, terminal 1.
(5) Connect negative (-) multimeter lead to a known good ground.
(6) Set MAIN POWER switch to ON position (TM 10-3930-669-10).
(7) Set engine switch to ignition position (TM 10-3930-669-10).
  (a) If there are not 22 to 24 Vdc present, perform Steps (8) through (11) below and go to Step 5 of this Fault.
  (b) If there are 22 to 24 Vdc present, perform Steps (8) and (9) below and go to Step 3 of this Fault.
(8) Set engine switch to off position.
(9) Set MAIN POWER switch to OFF position.
(10) Connect connector P2 1 on master cylinder pressure switch connector.
(11) Close engine access panel (TM 10-3930-669-10).

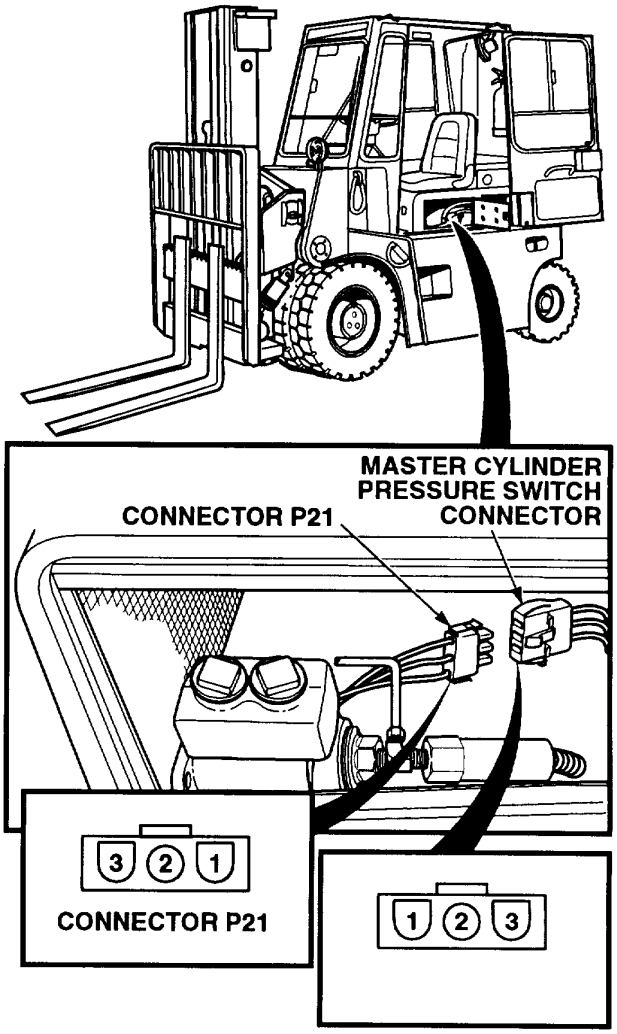

www.truck-freeworkshop.com

22. TRANSMISSION DOES NOT OPERATE IN FORWARD OR REVERSE (CONT).

KNOWN INFO
All 24 Vdc circuits operate. Fuse 3 OK. HIGH Range Indicator operates. Wire 10 OK. Interlock switch OK. Wire 10A OK.
POSSIBLE PROBLEMS
Master cylinder pressure switch faulty. Wire 10B faulty. Diode module DM1 faulty.

2.

Is continuity measured between master cylinder pressure switch connector, terminals 1 and 2?

NO → Replace master cylinder pressure switch (Para 7-17).

YES ↓

TEST OPTIONS
Continuity test. STE/ICE-R #91.
REASON FOR QUESTION
If continuity is not present master cylinder pressure switch is faulty.

KNOWN INFO
All 24 Vdc circuits operate. Fuse 3 OK. HIGH Range Indicator operates. Wire 10 OK. Interlock switch OK. Wire 10A OK. Master cylinder pressure
POSSIBLE PROBLEMS
Wire 10B faulty. Diode module DM1 faulty.

3.

WARNING
Read WARNING on Page 2-259

Are 22 to 24 vdc measured at diode module DM1, terminal T2 cavity?

NO → Repair wire 10B (see schematic Appendix F). Go to Step 6 of this Fault.

YES → Replace diode module DM1 (Para 7-33). Go to Step 6 of this Fault.

TEST OPTIONS
Voltage test. STE/ICE-R #89.
REASON FOR QUESTION
If 22 to 24 Vdc are not present, wire 10B is faulty. If wire 10B is OK diode module DM1 faulty.

www.truck-freeworkshop.com

WARNING

Remove all jewelry such as rings, dog tags, bracelets, etc. If jewelry contacts battery terminal, a direct short may result in instant heating of tools, damage to equipment, and injury or death to personnel.

NOTE

Using wiring schematic to follow logic flow.

CONTINUITY TEST

(1) Set multimeter select switch to OHMS.
(2) Check continuity between master cylinder pressure switch connector, terminals 1 and 2.
   (a) If there is no continuity, replace master cylinder pressure switch (Pare 7-17).
   (b) If there is continuity, master cylinder pressure switch is OK.
(3) Connect connector P21 on master cylinder pressure switch connector.
(4) Close engine access panel (TM 10-3930-669-10).

VOLTAGE TEST

(1) Remove diode module DM1 (Para 7-33).
(2) Set multimeter select switch to VOLTS DC.
(3) Connect positive (+) multimeter lead to diode module DM1, terminal T2 cavity.
(4) Connect negative (-) multimeter lead to a known good ground.
(5) Set MAIN POWER switch to ON position (TM 10-3930-669-10).
(6) Set engine switch to ignition position (TM 10-3930-669-10).
   (a) If there are not 22 to 24 Vdc present, perform Steps (7) and (8) below and repair wire 10B (see schematic Appendix F).
   (b) If there are 22 to 24 Vdc present replace diode module DM1.
(7) Set engine switch to off position.
(8) Set MAIN POWER switch to OFF position.
(9) Install diode module DM1.

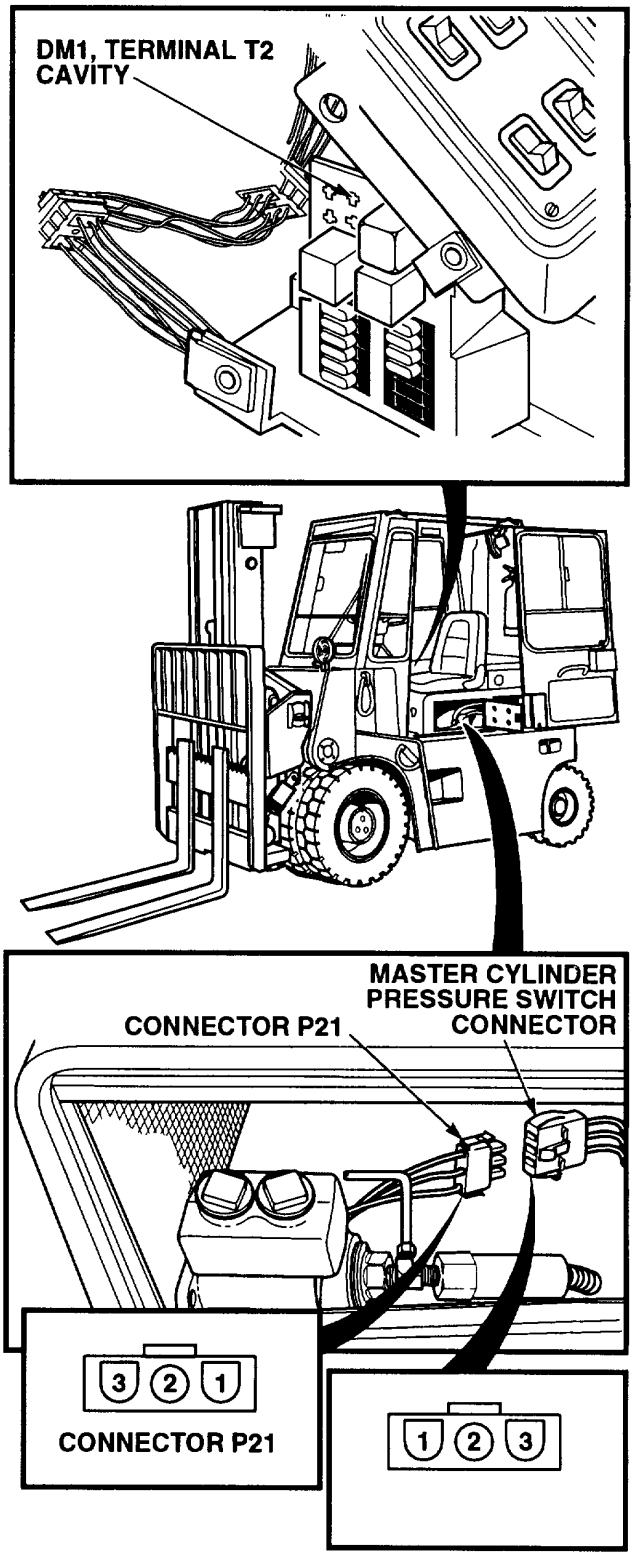

www.truck-freeworkshop.com

22. TRANSMISSION DOES NOT OPERATE ON FORWARD OR REVERSE (CONT).

KNOWN INFO
All 24 vdc circuits operate. Fuse 3 OK. HIGH Range Indicator operates. Master cylinder pressure switch OK. Wire 10B OK. Diode module DM1 OK.
POSSIBLE PROBLEMS
Wire 10 faulty. Interlock switch faulty. Wire 10A faulty.

4.

WARNING
Read WARNING on Page 2-261

Are 22 to 24 vdc measured at parking brake interlock switch, terminal COMMON?

NO → Repair wire 10 to interlock switch (see schematic Appendix F). Go to Step 6 of this Fault.

YES ↓

TEST OPTIONS
Voltage test. STE/ICE-R #89.
REASON FOR QUESTION
If 22 to 24 vdc are not present, wire 10 is faulty.

KNOWN INFO
All 24 vdc circuits operate. Fuse 3 OK. HIGH Range Indicator operates. Master cylinder pressure switch OK. Wire 10B OK. Diode module DM1 OK. Wire 10 OK.
POSSIBLE PROBLEMS
Interlock switch faulty. Wire 10A faulty.

5.

Is continuity measured between parking brake interlock switch, terminals COMMON and NORM CLOSE?

NO → Replace interlock switch (Para 11-2). Go to Step 6 of this Fault.

YES → Repair wire 10A to interlock switch (see schematic Appendix F). Go to Step 6 of this Fault.

TEST OPTIONS
Continuity test. STE/ICE-R #91.
REASON FOR QUESTION
If continuity is not present, interlock switch is faulty. If interlock switch is OK, wire 10A is faulty.

www.truck-freeworkshop.com

WARNING

Remove all jewelry such as rings, dog tags, bracelets, etc. If jewelry contacts battery terminal, a direct short may result in instant heating of tools, damage to equipment, and injury or death to personnel.

VOLTAGE TEST

(1) Remove instrument panel (Para 7-8).
(2) Set multimeter select switch to VOLTS DC.
(3) Connect positive (+) multimeter lead to parking brake interlock switch, terminal COMMON.
(4) Connect negative (-) multimeter lead to a known good ground.
(5) Set MAIN POWER switch to ON position (TM 10-3930-669-10).
(6) Set engine switch to ignition position (TM 10-3930-669-10).
  (a) If there are not 22 to 24 vdc present, perform Steps (7) and (8) below and repair wire 10 to interlock switch (see schematic Appendix F)
  (b) If there are 22 to 24 vdc present, wire 10 is OK.
(7) Set engine switch to off position.
(8) Set MAIN POWER switch to OFF position.

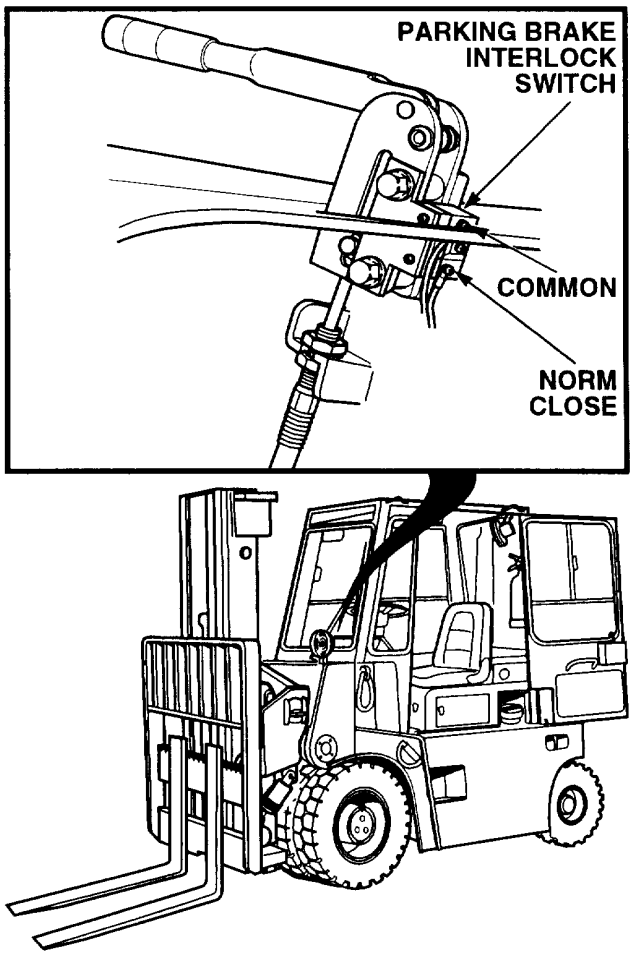

CONTINUITY TEST

(1) Set multimeter select switch to OHMS.
(2) Check continuity between parking brake interlock switch, terminals COMMON and NORM CLOSE.
  (a) If there is no continuity, replace interlock switch (Para 11-2).
  (b) If there is continuity, repair wire 1 OA to interlock switch (see schematic Appendix F).
(3) Install instrument panel (Para 7-8).

www.truck-freeworkshop.com

22. TRANSMISSION DOES NOT OPERATE IN FORWARD OR REVERSE (CONT).

KNOWN INFO
All 24 vdc circuits operate. Fuse 3 OK. HIGH Range Indicator operates. Master cylinder pressure switch OK. Wire 10B OK. Diode module DM1 OK. Wire 10 OK. Interlock switch OK. Wire 10A OK.
POSSIBLE PROBLEMS
Transmission torque converter faulty.

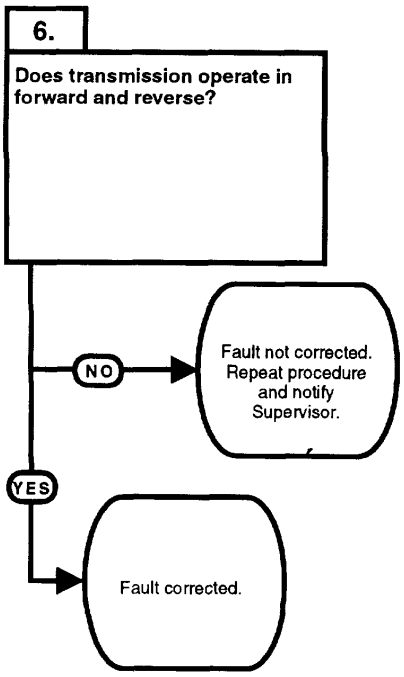

TEST OPTIONS
Verify repair.
REASON FOR QUESTION
If transmission operates in forward and reverse, fault has been corrected.

www.truck-freeworkshop.com

VERIFY REPAIR

(1) Start engine (TM 10-3930-669-10).
(2) Operate forklift in forward and reverse (TM 10-3930-669-10).
   (a) If transmission does not operate in forward and reverse, fault not corrected. Perform Steps (3) and (4) below and repeat procedure and notify Supervisor.
   (b) If transmission operates in forward and reverse, fault corrected.
(3) Set transmission control lever to neutral position.
(4) Shut down engine.

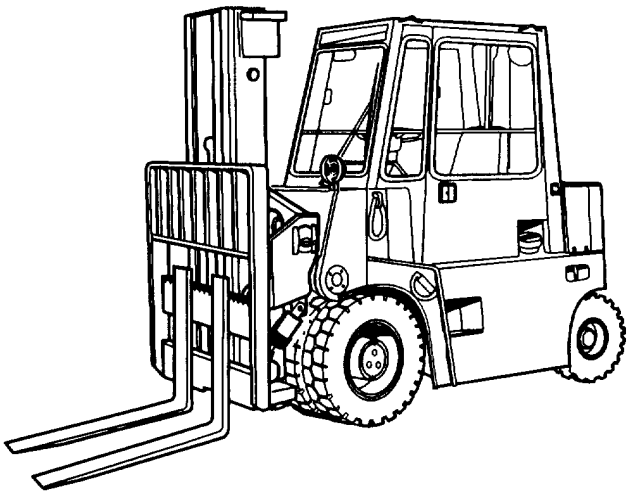

www.truck-freeworkshop.com

2-14. ELECTRICAL SYSTEM TROUBLESHOOTING (CONT).

23. HIGH RANGE INDICATOR DOES NOT OPERATE.

INITIAL SETUP

Tools and Special Tools
Tool Kit, General Mechanic's: Automotive (Item 1, Appendix B)
Multimeter (Item 2, Appendix B)
STE/ICE-R (Optional) (Item 14, Appendix B)

Equipment Condition
Engine OFF (TM 10-3930-669-10)
MAIN POWER switch OFF (TM 10-3930-669-10)
Parking brake applied (TM 10-3930-669-10)
Wheels chocked (TM 10-3930-669-10)

References
TM 10-3930-669-10

KNOWN INFO
Transmission operates in HIGH RANGE.
POSSIBLE PROBLEMS
Wire 14 faulty. Transmission range switch faulty.

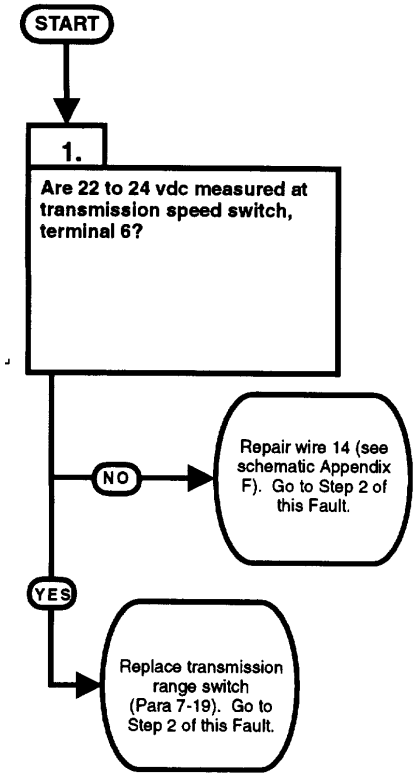

TEST OPTIONS
Voltage test. STE/ICE-R #89.
REASON FOR QUESTION
If 22 to 24 vdc are not present, wire 14 is faulty. If wire 14 is OK, transmission range switch is faulty.

www.truck-freeworkshop.com

WARNING

Remove all jewelry such as rings, dog tags, bracelets, etc. If jewelry contacts battery terminal, a direct short may result in instant heating of tools, damage to equipment, and injury or death to personnel.

VOLTAGE TEST

(1) Remove transmission range switch (Para 7-19). Do not disconnect wires.
(2) Set multimeter select switch to VOLTS DC.
(3) Connect positive (+) multimeter lead to transmission speed switch, terminal 6.
(4) Connect negative (-) multimeter lead to a known good ground.
(5) Set MAIN POWER switch to ON position (TM 10-3930-669-10).
(6) Set engine switch to ignition position (TM 10-3930-669-10).
(7) Set transmission range switch to HIGH RANGE position (TM 10-3930-669-10).
  (a) If there are not 22 to 24 vdc present, perform Steps (8) through (10) below and repair wire 14 (see schematic Appendix F).
  (b) If there are 22 to 24 vdc present, perform Steps (8) and (9) replace transmission speed switch (Para 7-19).
(8) Set engine switch to off position.
(9) Set MAIN POWER switch to OFF position.
(10) Set transmission range switch to LOW RANGE position.

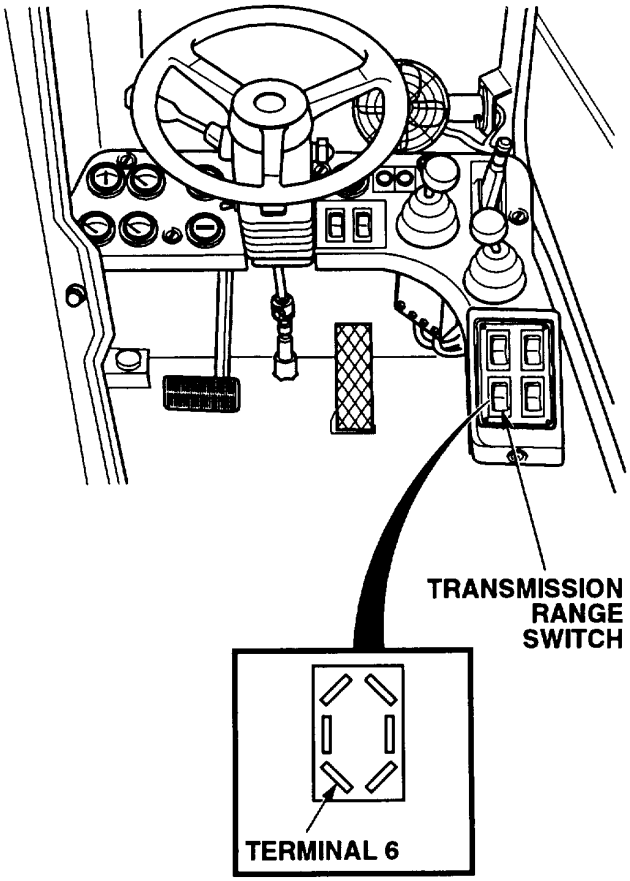

www.truck-freeworkshop.com

23. HIGH RANGE INDICATOR DOES NOT OPERATE (CONT).

KNOWN INFO
Transmission operates in HIGH RANGE. Wire 14 OK. Transmission range switch OK.
POSSIBLE PROBLEMS

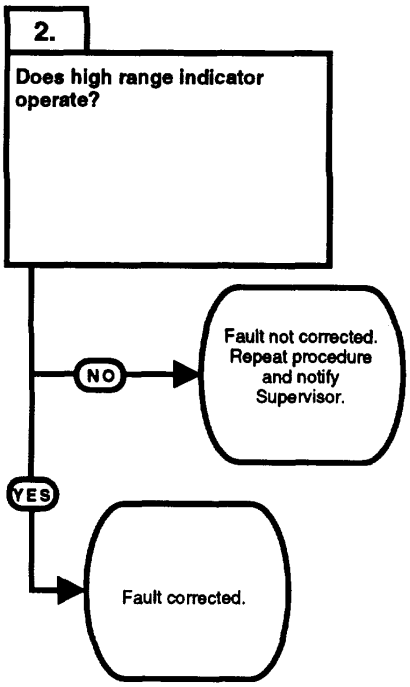

TEST OPTIONS
Verify repair.
REASON FOR QUESTION
If high range indicator operates, fault has been corrected.

www.truck-freeworkshop.com

VERIFY REPAIR

(1) Set MAIN POWER switch to ON position (TM 10-3930-669-10).
(2) Set engine switch to ignition position (TM 10-3930-669-10).
(3) Set transmission range switch to HIGH RANGE position (TM 10-3930-669-10).
(4) Observe HIGH RANGE indicator.
  (a) If HIGH RANGE indicator does not operate, fault not corrected. Perform Steps (5) through (7) below and repeat procedure and notify Supervisor.
  (b) If HIGH RANGE indicator operates, fault corrected.
(5) Set transmission speed switch to LOW RANGE position.
(6) Set engine switch to off position.
(7) Set MAIN POWER switch to OFF position.

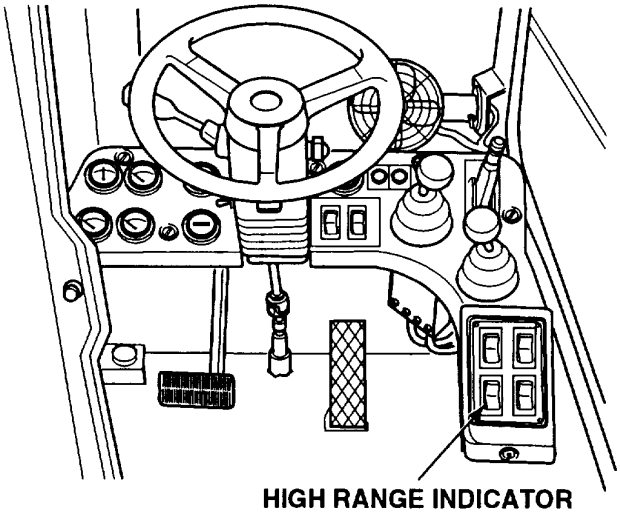

www.truck-freeworkshop.com

2-14. ELECTRICAL SYSTEM TROUBLESHOOTING (CONT).

24. TRANSMISSION DOES NOT ENGAGE IN HIGH RANGE.

INITIAL SETUP

Tools and Special Tools
Tool Kit, General Mechanic's: Automotive (Item 1, Appendix B)
Multimeter (Item 2, Appendix B)
STE/ICE-R (Optional) (Item 14, Appendix B)

Equipment Condition
Engine OFF (TM 10-3930-669-10)
MAIN POWER switch OFF (TM 10-3930-669-10)
Parking brake applied (TM 10-3930-669-10)
Wheels chocked (TM 10-3930-669-10)

References
TM 10-3930-669-10

KNOWN INFO
Transmission operates in forward and reverse.
POSSIBLE PROBLEMS
High range solenoid faulty. Wire 14 to solenoid faulty. Wire 10 faulty. Transmission range switch faulty.

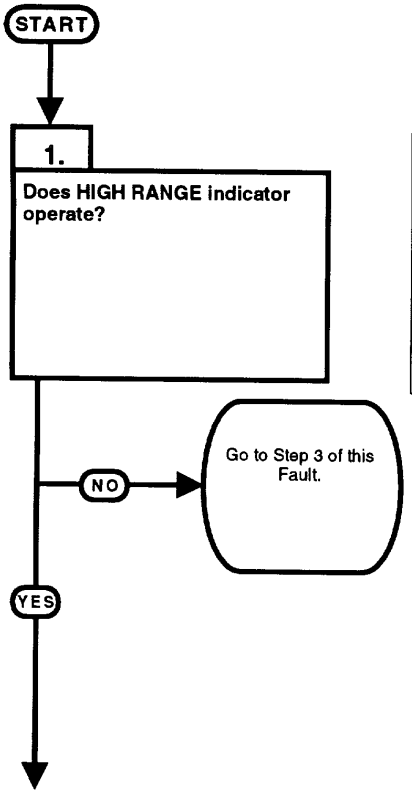

TEST OPTIONS
Visual inspection.
REASON FOR QUESTION
This question eliminates a possible problem or group of possible problems determining where troubleshooting continues.

www.truck-freeworkshop.com

VISUAL INSPECTION
(1) Start engine (TM 10-3930-669-10). (2) Set transmission range switch to HIGH RANGE position (TM 10-3930-669-10). (3) Observe HIGH RANGE indicator. (a) If HIGH RANGE indicator does not operate, perform Steps (4) through (6) below and go to Step 3 of this Fault. (b) If HIGH RANGE indicator operates, perform Steps (4) through (6) below and go to Step 2 of this Fault. (4) Set transmission speed switch to LOW RANGE position. (5) Set engine switch to off position. (6) Set MAIN POWER switch to OFF position.

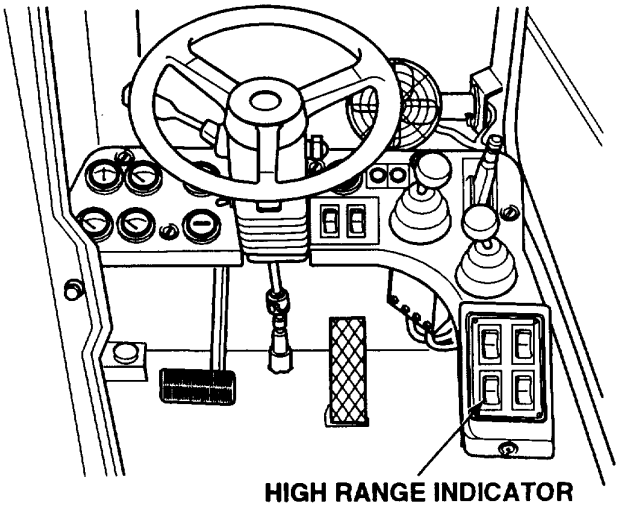

www.truck-freeworkshop.com

24. TRANSMISSION DOES NOT ENGAGE IN HIGH RANGE (CONT).

KNOWN INFO
Transmission operates in forward and reverse. Wire 10 OK. Transmission range switch OK.
POSSIBLE PROBLEMS
High range solenoid faulty. Wire 14 to solenoid faulty.

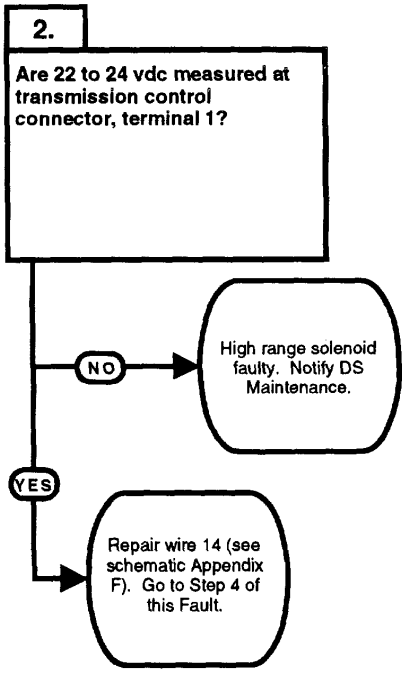

TEST OPTIONS
Voltage test. STE/ICE-R #89.
REASON FOR QUESTION
If solenoid is faulty, 22 to 24 vdc 4 will not be measured.

www.truck-freeworkshop.com

VOLTAGE TEST

(1) Remove floor plate (Para 15-12).
(2) Disconnect connector P11 from transmission control connector.
(3) Set multimeter select switch to VOLTS DC.
(4) Connect positive (+) multimeter lead to transmission control connector, terminal 1.
(5) Connect negative (-) multimeter lead to a known good ground.
(6) Set MAIN POWER switch to ON position (TM 10-3930669-10).
(7) Set engine switch to ignition position (TM 10-3930-669-10).
(8) Set transmission range switch to HIGH RANGE position (TM 10-3930-669-10).
    (a) If there are not 22 to 24 vdc 7 present, high range solenoid faulty. Perform Steps (9) and (10) below and notify DS Maintenance.
    (b) If there are 22 to 24 vdc present, repair wire 14 (see schematic Appendix F).
(9) Connect connector P11 on transmission control connector.
(10) Install floor plate (TM 10-3930-669-10).

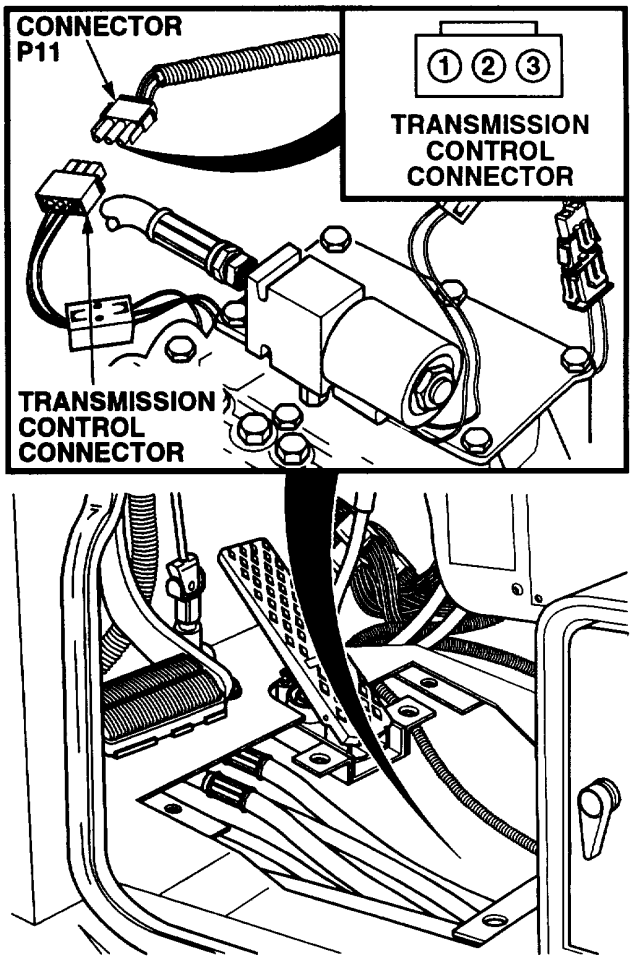

www.truck-freeworkshop.com

24. TRANSMISSION DOES NOT ENGAGE IN HIGH RANGE (CONT).

KNOWN INFO
Transmission operates in forward and reverse. High range solenoid OK. Wire 14 to solenoid OK. **POSSIBLE PROBLEMS** Wire 10 faulty. Transmission range switch faulty.

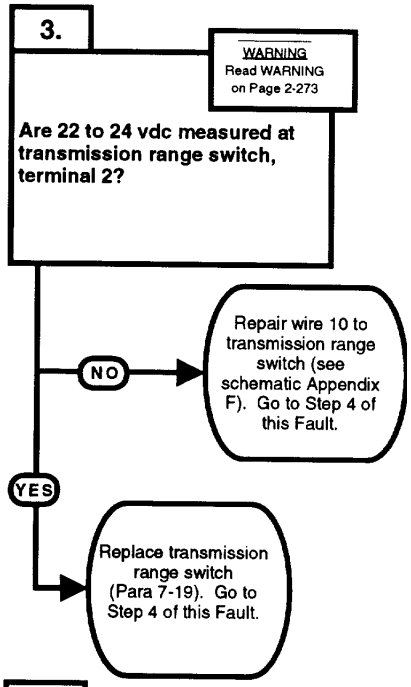

TEST OPTIONS
Voltage test. STE/ICE-R #89.
REASON FOR QUESTION
If 22 to 24 vdc are not present, wire 10 to transmission range switch is faulty.

KNOWN INFO
Transmission operates in forward and reverse. High range solenoid OK. Wire 14 to solenoid OK. Wire 10 OK. Transmission speed switch OK.
POSSIBLE PROBLEMS

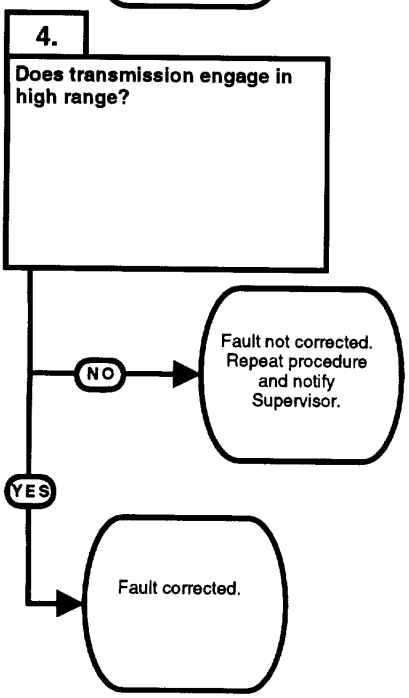

TEST OPTIONS
Verify repair.
REASON FOR QUESTION
If transmission engages in high range, fault has been corrected.

www.truck-freeworkshop.com

WARNING

Remove all jewelry such as rings, dog tags, bracelets, etc. If jewelry contacts battery terminal, a direct short may result in instant heating of tools, damage to equipment, and injury or death to personnel.

VOLTAGE TEST

(1) Remove transmission range switch (Para 7-19).
(2) Set multimeter select switch to VOLTS DC.
(3) Connect positive (+) multimeter lead to transmission range switch, terminal 2.
(4) Connect negative (-) multimeter lead to a known good ground.
(5) Set MAIN POWER switch to ON position (TM 10-3930-669-10).
(6) Set engine switch to ignition position (TM 10-3930-669-10).
  (a) If there are not 22 to 24 vdc present, perform Steps (7) and (8) below and repair wire 10 to transmission speed switch (see schematic Appendix F).
  (b) If there are 22 to 24 vdc present, perform Steps (7) and (B) below and replace transmission speed switch (Para 7-19).
(7) Set engine switch to off position.
(8) Set MAIN POWER switch to OFF position.

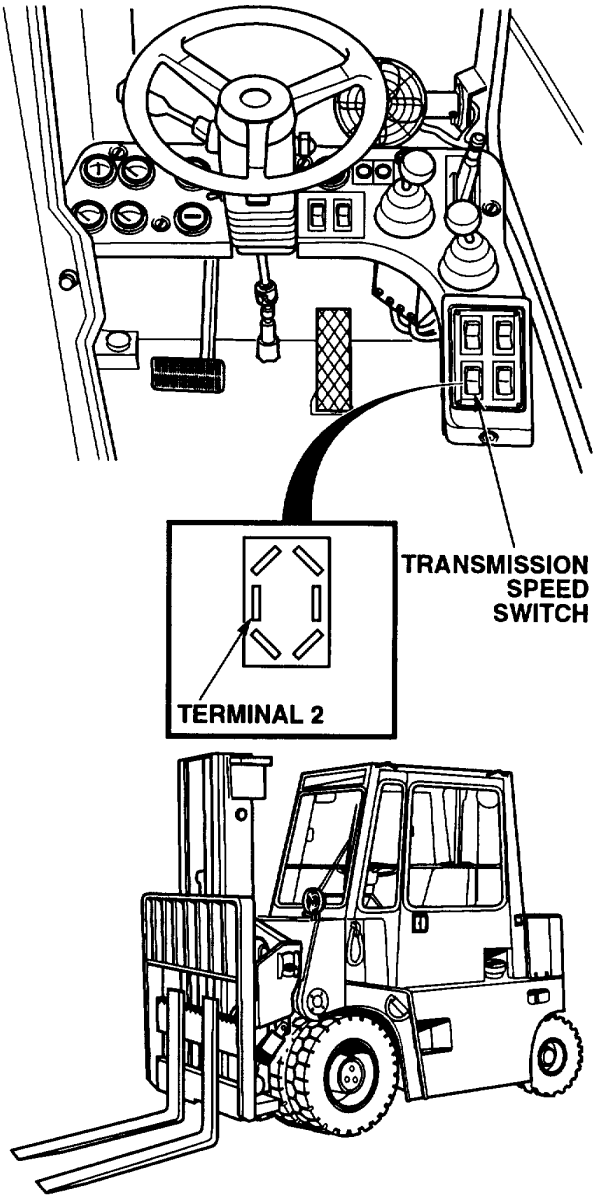

VERIFY REPAIR

(1) Start engine (TM 10-3930-669-10).
(2) Set transmission range switch to HIGH RANGE position (TM 10-3930-669-10).
(3) Observe and listen for speed and rpm change.
  (a) If transmission does not engage in high range, fault not corrected. Perform Steps (4) and (5) below and repeat procedure and notify Supervisor.
  (b) If transmission operates, fault corrected.
(4) Park forklift.
(5) Shut down engine.

www.truck-freeworkshop.com

2-14. ELECTRICAL SYSTEM TROUBLESHOOTING (CONT).

25. ENGINE STARTS WITH TRANSMISSION ENGAGED.

INITIAL SETUP

Tools and Special Tools
Tool Kit, General Mechanic's: Automotive (Item 1, Appendix B)
Multimeter (Item 2, Appendix B)
STE/ICE-R (Optional) (Item 14, Appendix B)
Jumper Wire

Equipment Condition
Engine OFF (TM 10-3930-669-10)
MAIN POWER switch OFF (TM 10-3930-669-10)
Parking brake applied (TM 10-3930-669-10)
Wheels chocked (TM 10-3930-669-10)

References
TM 10-3930-669-10

KNOWN INFO
24 vdc circuits operate.
POSSIBLE PROBLEMS
Wire 33 faulty. Diode module DM1 faulty. Wire 39 or wire 40 faulty. Diode module DM2 faulty. Wire 41 faulty. Relay R3 ground wire faulty. Relay R3 faulty.

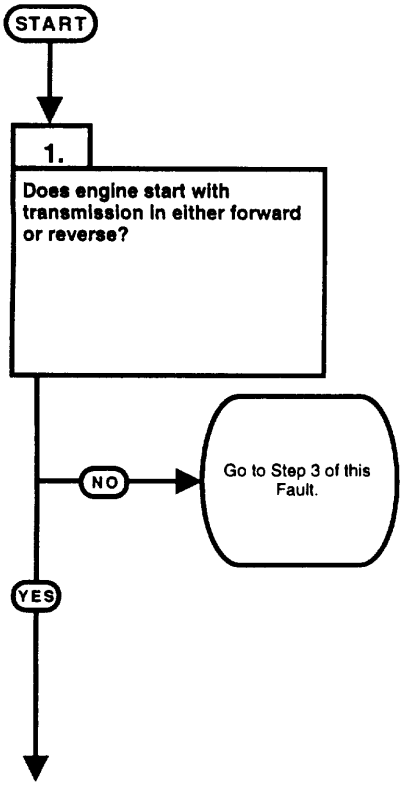

TEST OPTIONS
Operation test.
REASON FOR QUESTION
This question eliminates a possible problem or group of possible problems determining where troubleshooting continues.

www.truck-freeworkshop.com

OPERATION TEST

(1) Set transmission control lever in forward position (TM 10-3930-669-10).
(2) Depress brake pedal (TM 10-3930-669-10). Do not release.
(3) Start engine (TM 10-3930-669-10).
(4) Shut down engine.
(5) Set transmission control lever in reverse position.
(6) Start engine.
  (a) If engine does not start with transmission engaged in either forward and reverse positions, perform Steps (7) and (8) below and go to Step 2 of this Fault.
  (b) If engine starts with transmission engaged in both forward and reverse positions, perform Step (7) below and go to Step 3 of this Fault. Be sure to set transmission control lever in position which engine engages.
(7) Shut down engine and release brake pedal.
(8) Set transmission control lever in neutral position.

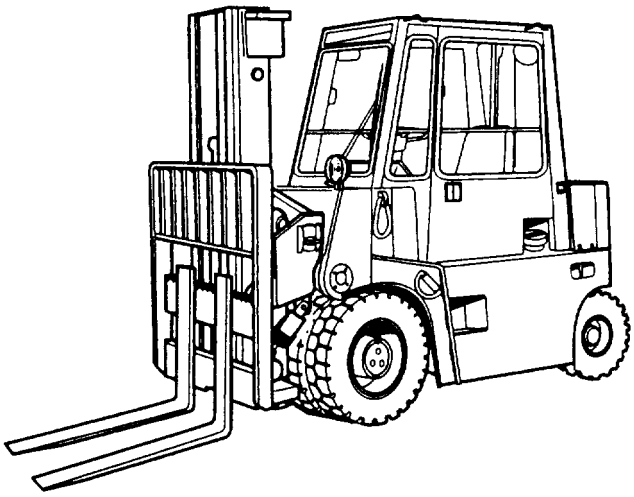

www.truck-freeworkshop.com

25. ENGINE STARTS WITH TRANSMISSION ENGAGED (CONT).

KNOWN INFO
24 vdc circuits operate. Wire 39 or wire 40 OK. Diode module DM2 OK Wire 41 OK. Relay R3 ground wire OK. Relay R3 OK.
POSSIBLE PROBLEMS
Wire 33 faulty. Diode module DM 1 faulty.

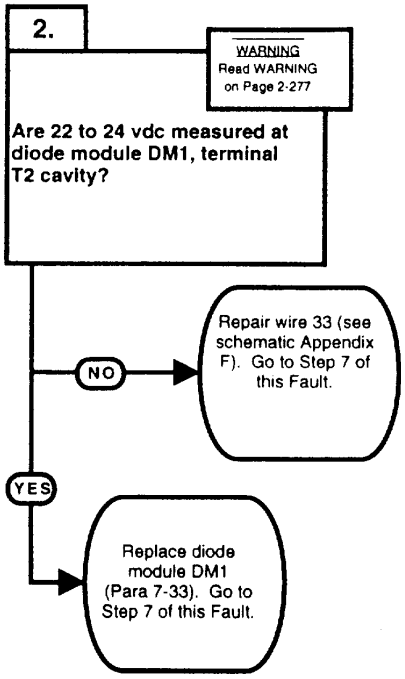

TEST OPTIONS
Voltage test. STE/ICE-R #89.
REASON FOR QUESTION
If 22 to 24 vdc are not present, wire 33 is faulty. If wire 33 is OK, diode module DM1 is faulty.

KNOWN INFO
24 vdc circuits operate. Wire 33 OK. Diode module DM1 OK.
POSSIBLE PROBLEMS
Wire 39 or wire 40 faulty. Diode module DM2 faulty. Wire 41 faulty. Relay R3 ground wire faulty. Relay R3 faulty.

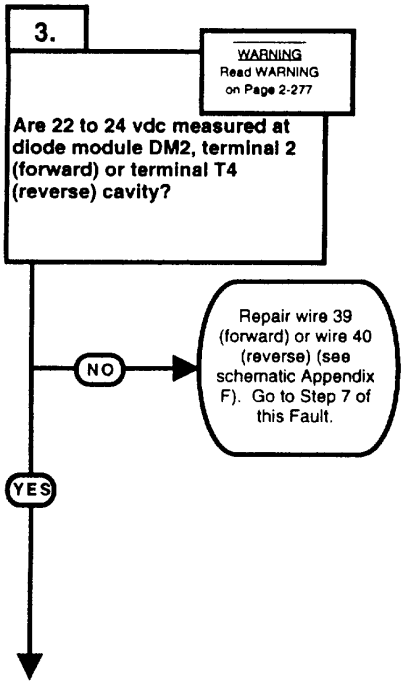

TEST OPTIONS
Voltage test. STEFICE-R #89.
REASON FOR QUESTION
If 22 to 24 vdc are not present, wire 39 (forward) or wire 40 (reverse) is faulty.

www.truck-freeworkshop.com

WARNING

Remove all jewelry such as rings, dog tags, bracelets, etc. If jewelry contacts battery terminal, a direct short may result in instant heating of tools, damage to equipment. and injury or death to personnel.

VOLTAGE TEST

(1) Remove diode module DM1 (Para 7-33).
(2) Set multimeter select switch to VOLTS DC.
(3) Connect positive (+) multimeter lead to diode module DM1, terminal 2 cavity.
(4) Connect negative (-) multimeter lead to a known good ground.
(5) Start engine (TM 10-3930-669-10).
  (a) If there are not 22 to 24 vdc present, perform Step (6) and (7) below and repair wire 33 (see schematic Appendix F).
  (b) If there are 22 to 24 vdc present, perform Step (6) below and replace diode module DM1 (6) Shut down engine.
(7) Install diode module DM1.

VOLTAGE TEST

(1) Remove diode module DM2 (Para 7-33).
(2) Set multimeter select switch to VOLTS DC.
(3) Connect positive (+) multimeter lead to diode module DM2. terminal T2 (engages in forward) or terminal 4 (engages in reverse).
(4) Connect negative (-) multimeter lead to a known good ground.
(5) Set MAIN POWER switch to ON position (TM 10-3930-669-10).
(6) Set engine switch to ignition position (TM 10-3930-669-10).
  (a) If there are not 22 to 24 vdc present, perform Steps (7) through (9) below and repair wire 39 (forward) or wire 40 (reverse) (see schematic Appendix F).
  (b) If there are 22 to 24 vdc present, wire 34 (forward) or wire 40 (reverse) is OK. Do not install diode module.
(7) Set engine switch to off position.
(8) Set MAIN POWER switch to OFF position.
(9) Install diode module DM2.

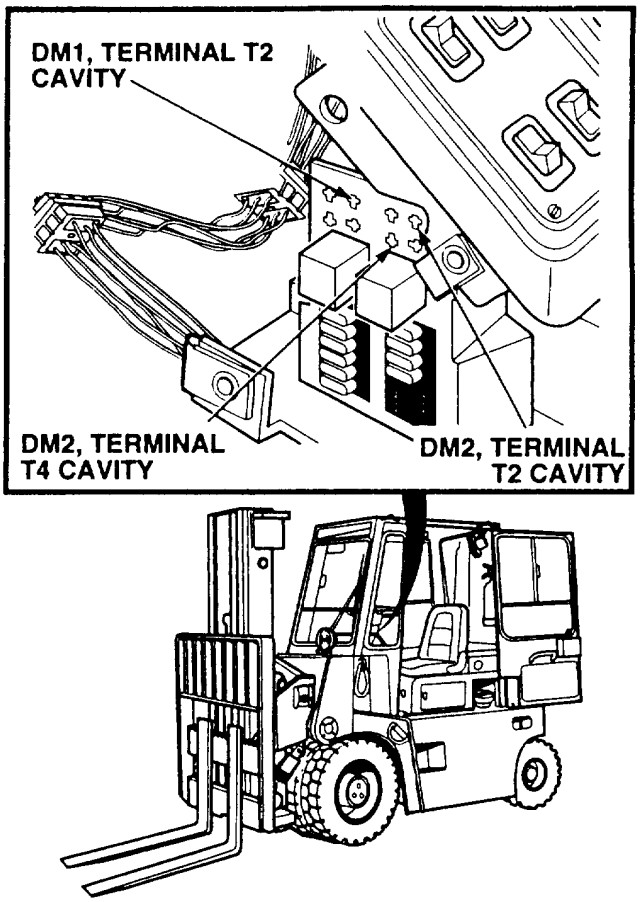

www.truck-freeworkshop.com

25. ENGINE STARTS WITH TRANSMISSION ENGAGED (CONT).

KNOWN INFO
24 vdc circuits operate. Wire 33 OK. Diode module DM1 OK. Wire 39 or wire 40 OK.
POSSIBLE PROBLEMS
Diode module DM2 faulty. Wire 41 faulty. Relay R3 ground wire faulty. Relay R3 faulty.

4.

Is continuity measured between diode module DM2, terminals T2 and T1 (forward) or terminals T4 and T3 (reverse) cavity?

NO → Replace diode module DM2 (Para 7-33). Go to Step 7 of this Fault.

YES ↓

TEST OPTIONS
Continuity test. STE/ICE-R #91.
REASON FOR QUESTION
If continuity is not present, diode module DM2 is faulty.

KNOWN INFO
24 vdc circuits operate. Wire 33 OK. Diode module DM1 OK. Wire 39 or wire 40 OK. Diode module DM2 OK.
POSSIBLE PROBLEMS
Wire 41 faulty. Relay R3 ground wire faulty. Relay R3 faulty.

5.

Is continuity measured between diode module DM2, terminal 3 and relay R3, terminal 86 cavity?

NO → Repair wire 41 (see schematic Appendix F). Go to Step 7 of this Fault.

YES ↓

TEST OPTIONS
Continuity test. STEACE-R #91.
REASON FOR QUESTION
If continuity is not present , wire 41 is faulty.

www.truck-freeworkshop.com

CONTINUITY TEST

(1) Set multimeter select switch to OHMS.
(2) Check continuity between diode module DM2. terminals 2 and 1 (forward) or terminals 4 and 3 (reverse).
   (a) If there is no continuity, replace diode module DM2 (Para 7-33).
   (b) If there is continuity, diode module DM2 is OK.

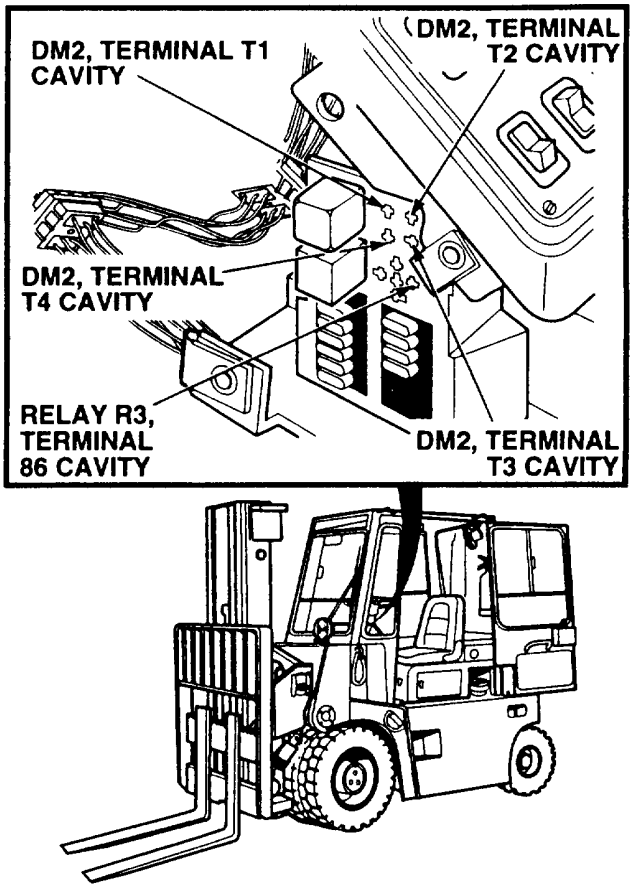

CONTINUITY TEST

(1) Ground diode module DM2, terminal 3.
(2) Remove relay R3 (Para 7-33).
(3) Set multimeter select switch to OHMS.
(4) Check continuity between relay R3, terminal 86 cavity and a known good ground.
   (a) If there is no continuity, repair replace wire 41 (see schematic Appendix F).
   (b) If there is continuity, wire 41 is OK. Go to Step 6 of this Fault.
(5) Install diode module DM2 (Para 7-33).

www.truck-freeworkshop.com

25. ENGINE STARTS WITH TRANSMISSION ENGAGED (CONT).

KNOWN INFO
24 vdc circuits operate. Wire 33 OK. Diode module DM1 OK. Wire 39 or wire 40 OK. Diode module DM2 OK. Wire 41 OK.
POSSIBLE PROBLEMS
Relay R3 ground wire faulty. Relay R3 faulty.

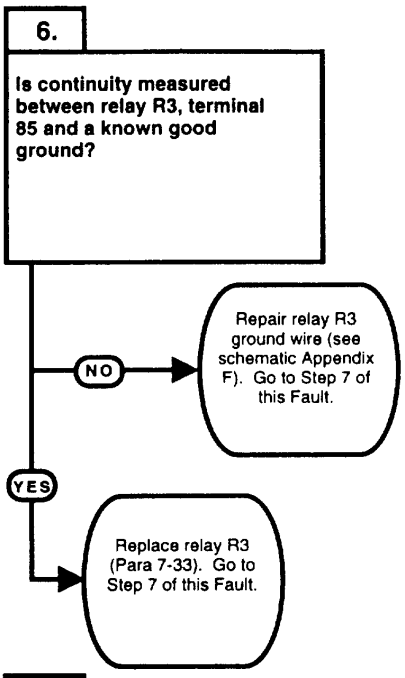

TEST OPTIONS
Continuity test. STE/ICE-R #91.
REASON FOR QUESTION
If continuity is not present, relay R3 ground wire is faulty. If ground wire is OK, relay R3 is faulty.

KNOWN INFO
24 vdc circuits operate. Wire 33 OK. Diode module DM1 OK. Wire 39 or wire 40 OK. Diode module DM2 OK. Wire 41 OK. Relay R3 ground wire OK. Relay R3 OK.
POSSIBLE PROBLEMS

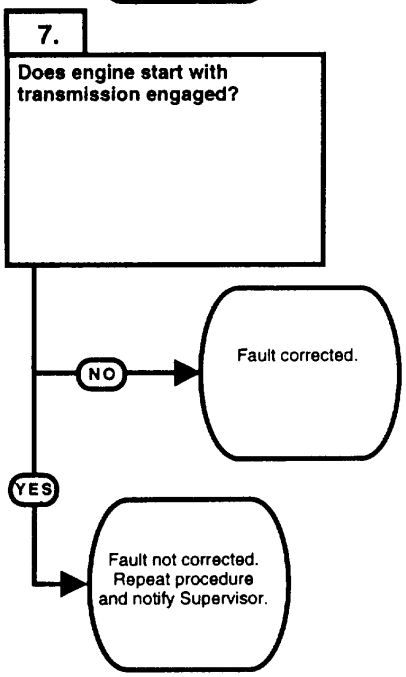

TEST OPTIONS
Verify repair.
REASON FOR QUESTION
If engine does not start with transmission engaged, fault has been corrected.

www.truck-freeworkshop.com

CONTINUITY TEST

(1) Set multimeter select switch to OHMS.
(2) Check continuity between relay R3, terminal 85 and a known good ground.
  (a) If there is no continuity, repair relay R3 ground wire (see schematic Appendix F).
  (b) If there is continuity, replace relay R3.
(3) Install relay R3 (Para 7-33).

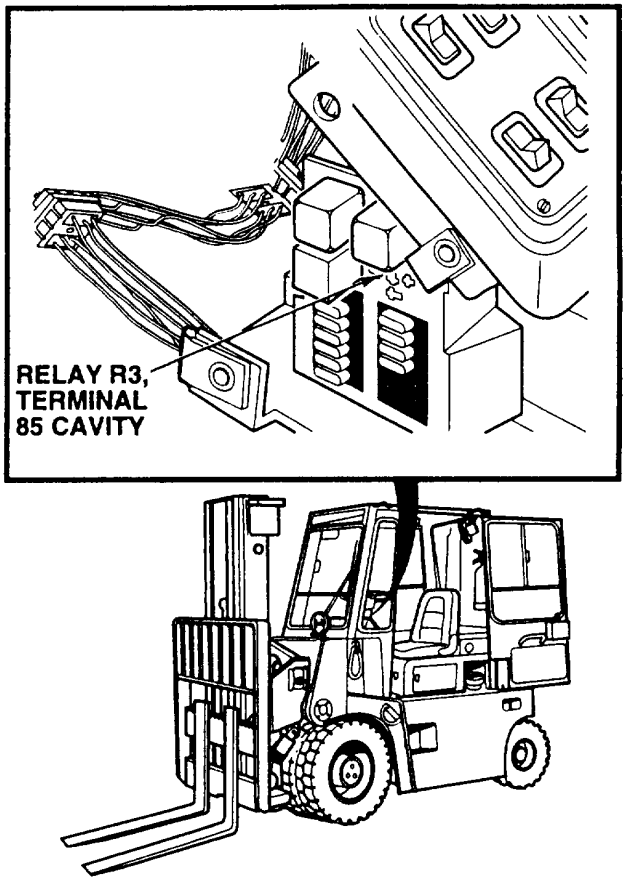

VERIFY REPAIR

(1) Set transmission control lever in forward position (TM 10-3930-669-10).
(2) Start engine (TM 10-3930-669-10).
  (a) If engine does not start with transmission engaged, go to Step (3) below.
  (b) If engine starts with transmission engaged, fault not corrected. Perform Steps (5) and (6) below and repeat procedure and notify Supervisor.
(3) Set transmission control lever in reverse position.
(4) Start engine.
  (a) If engine does not start with transmission engaged, fault corrected. Perform Steps (5) and (6) below.
  (b) If engine starts with transmission engaged, fault not corrected. Perform Steps (5) and (6) below and repeat procedure and notify Supervisor.
(5) Set transmission control lever in neutral position.
(6) Shut down engine.

www.truck-freeworkshop.com

2-14. ELECTRICAL SYSTEM TROUBLESHOOTING (CONT).

26. ELECTRICAL SYSTEM DOES NOT MAINTAIN A CHARGE.

INITIAL SETUP

Tools and Special Tools
Tool Kit, General Mechanic's: Automotive (Item 1, Appendix B)
Multimeter (Item 2, Appendix B)
STE/ICE-R (Optional) (Item 14, Appendix B)

Equipment Condition
Engine OFF (TM 10-3930-669-10)
MAIN POWER switch OFF (TM 10-3930-669-10)
Parking brake applied (TM 10-3930-669-10)
Wheels chocked (TM 10-3930-669-10)

References
TM 10-3930-669-10

KNOWN INFO
Engine operates.
POSSIBLE PROBLEMS
Batteries faulty. Alternator faulty. Alternator power wire faulty. Wire 34 faulty. Relay R1 ground wire faulty. Relay R1 faulty. Regulator faulty.

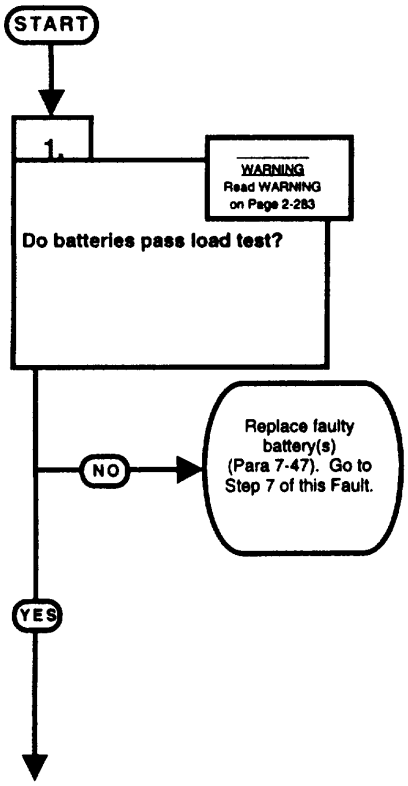

TEST OPTIONS
STE/ICE-R #73 and #75.
REASON FOR QUESTION
Batteries may not have capacity to crank engine even though 12 and 24 vdc may be measured.

www.truck-freeworkshop.com

WARNING

Remove all jewelry such as rings, dog tags. bracelets, etc. If jewelry contacts battery terminal, a direct short may result in instant heating of tools, damage to equipment. and injury or death to personnel.

NOTE

If test Error occurs, refer to Appendix J, TM 9-4910-571-12&P.

STE/ICE-R #73 AND 75 TEST

(1) Disconnect connector P10 from fuel solenoid connector (Para 7-36).
(2) Perform Confidence Test (TM 9-4910-571-12&P).
(3) Set MAIN POWER switch to ON position (TM 10-3930-669-10).
(4) Set engine switch to start position until OFF is displayed on VTM.
  (a) If between 13 milliohms or below are not displayed, perform Steps (5) through (8) below and replace battery (Para 7-48).
  (b) If 13 milliohms or below are displayed, go to Step (5) below.
(5) Set engine switch to off position (TM 10-3930-669-10).
(6) Set engine switch to start position until OFF is displayed on VTM.
  (a) If 50 milliohms/sec or below are not displayed. perform Steps (7) and (8) below and replace battery (Para 7-47).
  (b) If 50 milliohms/sec or below are displayed, battery is OK.
(7) Set MAIN POWER switch to OFF position.
(8) Connect connector P10 to fuel shutoff solenoid connector.

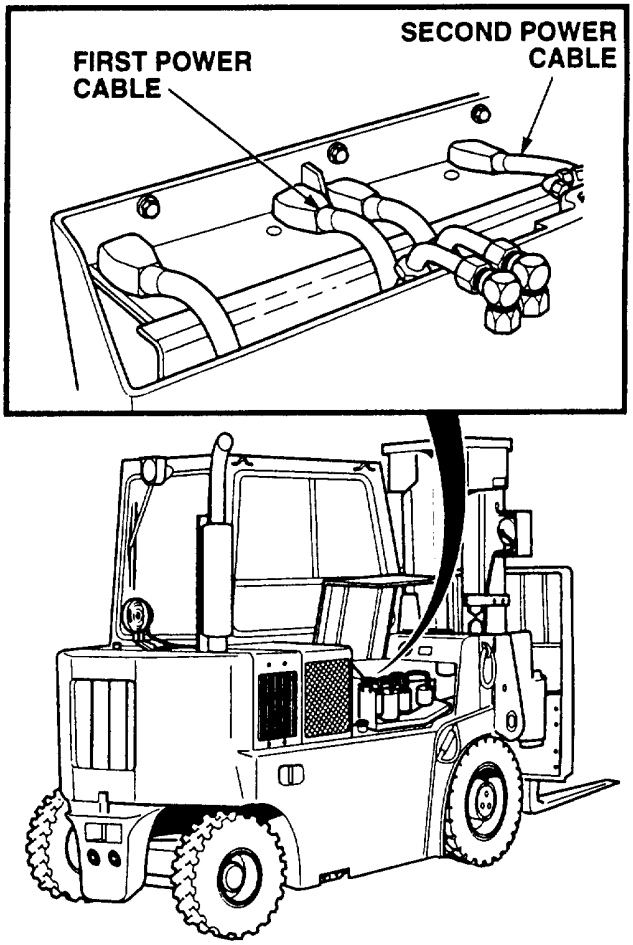

www.truck-freeworkshop.com

26. ELECTRICAL SYSTEM DOES NOT MAINTAIN A CHARGE (CONT).

KNOWN INFO
Engine operates. Batteries OK.
POSSIBLE PROBLEMS
Alternator faulty. Alternator power wire faulty. Wire 34 faulty. Relay R1 ground wire faulty. Relay R1 faulty. Regulator faulty.

2.

WARNING
Read WARNING on Page 2-285

Are 22 to 24 vdc measured at relay R1, terminal 30 cavity?

NO → Replace alternator (Para 7-2). Go to Step 7 of this Fault.

YES ↓

TEST OPTIONS
Voltage test. STEACE-R #89.
REASON FOR QUESTION
If 22 to 24 vdc (field voltage) is not present. alternator is faulty.

KNOWN INFO
Engine operates. Batteries OK. Alternator OK.
POSSIBLE PROBLEMS
Alternator power wire faulty. Wire 34 faulty. Relay R1 ground wire faulty. Relay RI faulty. Regulator faulty.

3.

WARNING
Read WARNING on Page 2-285

Are 22 to 24 vdc measured at alternator, terminal B+?

NO → Go to Step 4 of this Fault.

YES → Replace alternator power wire (See Schematic Appendix F). Go to Step 7 of this Fault.

TEST OPTIONS
Voltage test. STE/ICE-R #89.
REASON FOR QUESTION
If 22 to 24 vdc are not present, alternator power wire is faulty.

www.truck-freeworkshop.com

WARNING

Remove all jewelry such as rings, dog tags, bracelets, etc. If jewelry contacts battery terminal, a direct short may result in instant heating of tools, damage to equipment, and injury or death to personnel.

VOLTAGE TEST

(1) Remove relay R1 (Para 7-33).
(2) Connect relay R1, terminals 30 and 87.
(3) Set multimeter select switch to VOLTS DC.
(4) Connect positive (+) multimeter lead to relay R1, terminal 30.
(5) Connect negative (-) multimeter lead to a known good ground.
(6) Start engine (TM 10-3930-669-10).
  (a) If there are not 22 to 24 vdc present, perform Steps (7) and (8) below and replace alternator (Para 7-2).
  (b) If there are 22 to 24 vdc present, alternator is OK.
(7) Shut down engine.
(8) Install relay R1.

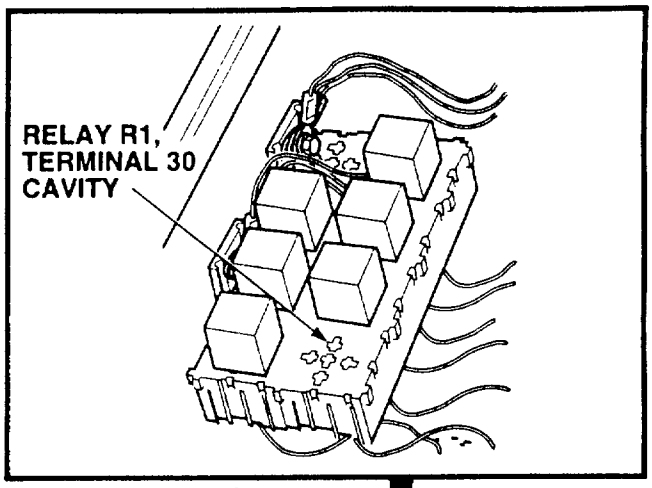

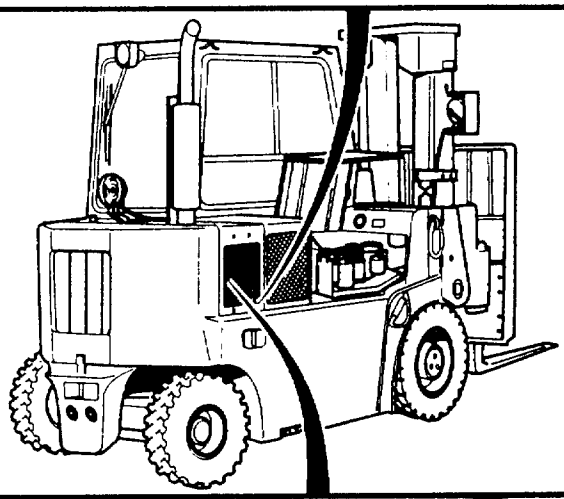

VOLTAGE TEST

(1) Set multimeter select switch to VOLTS DC.
(2) Connect positive (+) multimeter lead to alternator, terminal B+.
(3) Connect negative (-) multimeter lead to a known good ground.
(4) Start engine (TM 10-3930-669-10).
  (a) If there are not 22 to 24 vdc present, perform Step (5) below and go to Step 4 of this Fault.
  (b) If there are 22 to 24 vdc present, perform Step (5) below and replace alternator power wire (See schematic Appendix F).
(5) Shut down engine.

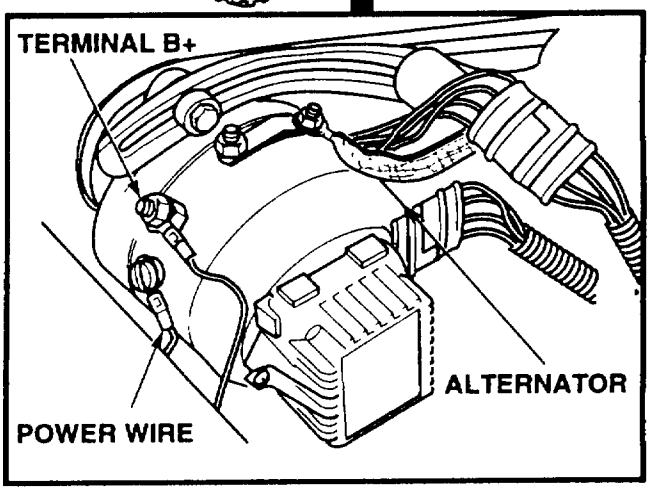

www.truck-freeworkshop.com

26. ELECTRICAL SYSTEM DOES NOT MAINTAIN A CHARGE (CONT).

KNOWN INFO
Engine operates. Batteries OK. Alternator OK. Alternator power wire OK.
POSSIBLE PROBLEMS
Wire 34 faulty. Relay R1 ground wire faulty. Relay R1 faulty. Regulator faulty.

4.

WARNING
Read WARNING on Page 4-267

Are 22 to 24 vdc measured at relay R1, terminal 86?

NO → Repair wire 34 (see schematic Appendix F). Go to Step 7 of this Fault.

YES ↓

TEST OPTIONS
Voltage test. STE/ICE-R #89.
REASON FOR QUESTION
If 22 to 24 vdc are not present, wire 34 is faulty.

5.

Is continuity measured between relay R1, terminal 85 and a known good ground?

NO → Replace relay R1 ground wire (See schematic Appendix F). Go to Step 7 of this Fault.

YES ↓

KNOWN INFO
Engine operates. Batteries OK. Alternator OK. Alternator power wire OK. Wire 34 OK.
POSSIBLE PROBLEMS
Relay R1 ground wire faulty. Relay R1 faulty. Regulator faulty.

TEST OPTIONS
Continuity test. STEACE-R #91.
REASON FOR QUESTION
If continuity is not present, relay R1 ground wire is faulty.

www.truck-freeworkshop.com

WARNING

Remove all jewelry such as rings, dog tags, bracelets, etc. If jewelry contacts battery terminal, a direct short may result in instant heating of tools, damage to equipment, and injury or death to personnel.

VOLTAGE TEST

(1) Remove relay R1 (Para 7-33).
(2) Set multimeter select switch to VOLTS DC.
(3) Connect positive (+) multimeter lead to relay R1, terminal 86.
(4) Connect negative (-) multimeter lead to a known good ground.
(5) Set MAIN POWER switch to ON position (TM 10-3930-669-10).
(6) Set engine switch to ignition position (TM 10-3930-669-10).
(a) If there are not 22 to 24 vdc present, perform Steps (7) and (8) below and repair wire 34 (see schematic Appendix F).
(b) If there are 22 to 24 vdc present, wire 34 is OK.
(7) Set engine switch to oft position.
(8) Set MAIN POWER switch to OFF position.

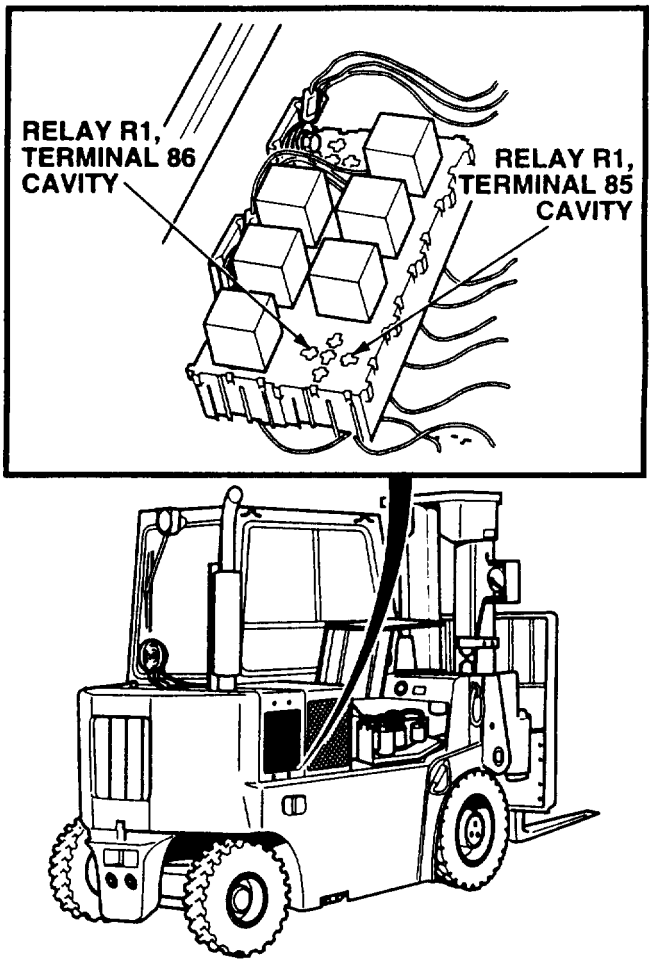

CONTINUITY TEST

(1) Set multimeter select switch to OHMS.
(2) Check continuity between relay R1, terminal 85 and a known good ground.
(a) If there is no continuity, replace relay R1 ground wire (See schematic Appendix F).
(b) If there is continuity, relay R1 ground wire is OK.

www.truck-freeworkshop.com

26. ELECTRICAL SYSTEM DOES NOT MAINTAIN A CHARGE (CONT).

KNOWN INFO
Engine operates. Batteries OK. Alternator OK. Alternator power wire OK. Wire 34 OK. Relay R1 ground wire OK.
POSSIBLE PROBLEMS
Relay R1 faulty. Regulator faulty.

6.

Are 22 to 24 vdc measured between relay R1, terminals 86 and 85?

NO → Replace relay R1 (Para 7-33). Go to Step 7 of this Fault.

YES → Replace regulator (Para 7-5). Go to Step 7 of this Fault.

TEST OPTIONS
Voltage test. STE/ICE-R #89.
REASON FOR QUESTION
If 22 to 24 vdc are not present, relay R1 is faulty. If relay R1 is OK, regulator is faulty.

KNOWN INFO
Engine operates. Batteries OK. Alternator OK. Alternator power wire OK. Wire 34 OK. Relay R1 ground wire OK. Relay R1 OK. Regulator OK.
POSSIBLE PROBLEMS

7.

Does electrical system maintain a charge?

NO → Fault not corrected. Repeat procedure and notify Supervisor.

YES → Fault corrected.

TEST OPTIONS
Verify repair.
REASON FOR QUESTION
If electrical system maintains a charge, fault has been corrected.

www.truck-freeworkshop.com

VOLTAGE TEST

(1) Set multimeter select switch to VOLTS DC.
(2) Check voltage between relay R1, terminals 86 and 85.
 (a) If 22 to 24 vdc are not present, replace relay R1.
 (b) If 22 to 24 vdc are present, replace regulator (Para 7-5).
(3) Install relay R1 (Para 7-33).

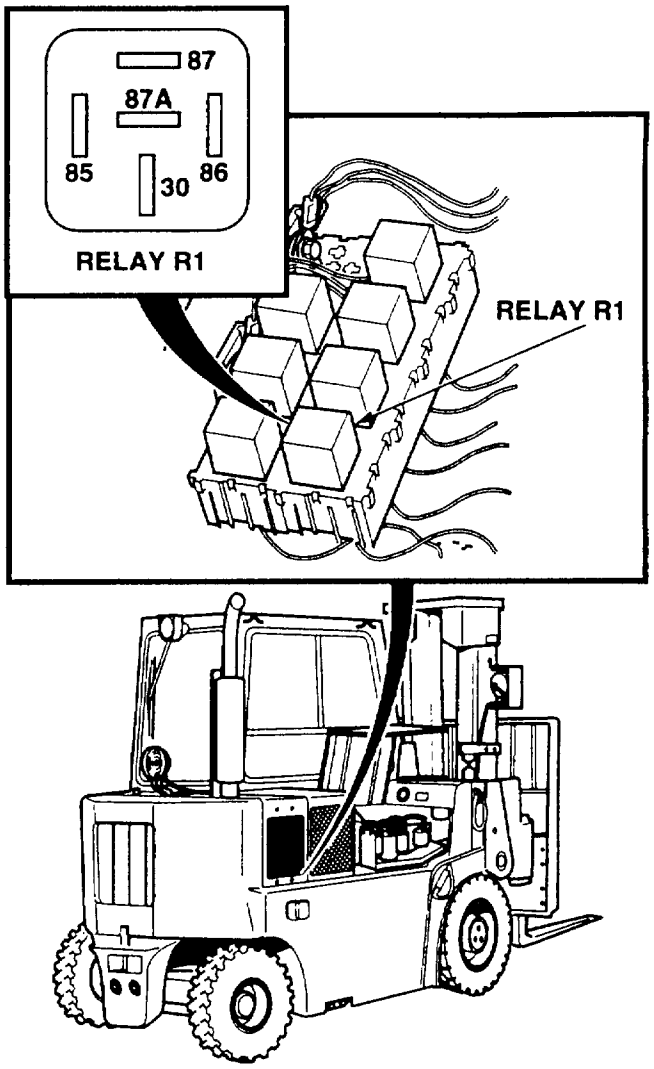

VERIFY REPAIR

(1) Start engine (TM 10-3930-669-10).
(2) Observe ammeter for declining amperage.
 (a) If amperage declines, fault not corrected. Perform Step (4) below and repeat procedure and notify Supervisor.
 (b) If amperage does not decline, go to Step (3) below.
(3) Shut down engine and restart engine.
 (a) If engine does not start, repeat procedure and notify Supervisor.
 (b) If engine starts, fault corrected.
(4) Shut down engine.

www.truck-freeworkshop.com

This Page Intentionally Left Blank.

www.truck-freeworkshop.com

2-15. TRANSMISSION SYSTEM TROUBLESHOOTING.

This paragraph covers Transmission Troubleshooting. The Transmission Fault Index, Table 2-6, lists faults for the transmission of the forklift.

Table 2-6. Transmission Fault Index

Fault No.	Troubleshooting Procedure	Page
1.	Transmission Malfunctions in Neutral	2-292
2.	Transmission Malfunctions in Forward.....	2-298
3.	Transmission Malfunctions in Reverse.	2-310
4.	Transmission Malfunctions in Forward and Reverse	2-322

www.truck-freeworkshop.com

2-15. TRANSMISSION TROUBLESHOOTING (CONT).

1. TRANSMISSION MALFUNCTIONS IN NEUTRAL.

INITIAL SETUP

Tools and Special Tools
Tool Kit, General Mechanic's: Automotive
(Item 1 Appendix B)

Materials/Parts
Oil, Lubricating (MIL-L-2104)
(Item 25Appendix C)

References
TM 10-3930-669-10
LO 10-3930-669-12

Equipment Condition
MAIN POWER switch OFF (TM 10-3930-669-10)
Engine OFF (TM 10-3930-669-10)
Parking brake applied (TM 10-3930-669-10)
Wheels chocked (TM 10-3930-669-10)

KNOWN INFO

Transmission control switches OK.
Transmission operates normally in forward and reverse.

POSSIBLE PROBLEMS

Warped clutch plates.
Pump assembly, sprag, or sprag races are worn.
Low transmission oil level.

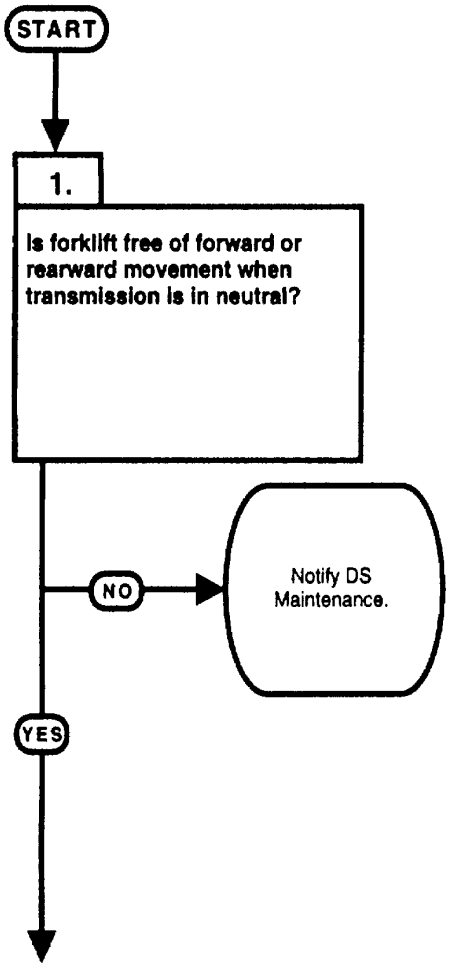

TEST OPTIONS

Visual inspection.

REASON FOR QUESTION

If clutch plates are warped or damaged, transmission will malfunction in neutral.

www.truck-freeworkshop.com

VISUAL INSPECTION
(1) Start engine (TM 10-3930-669-10). (2) Set transmission control lever to forward and reverse position and observe forklift for forward or rearward movement (TM 10-3930-669-10). (a) If forklift is not free of forward or rearward movement, perform Step (3) below and notify DS Maintenance. (b) If forklift is free of forward or rearward movement, clutch plates are OK. Perform Step (3) below and go to Step 2 of this Fault. (3) Shut down engine.

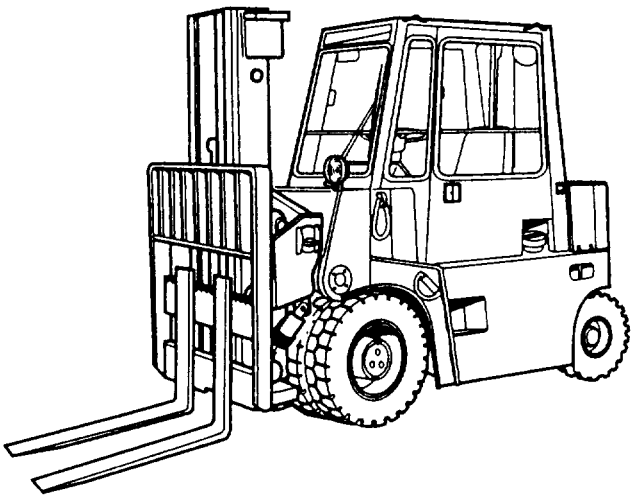

www.truck-freeworkshop.com

1. TRANSMISSION MALFUNCTIONS IN NEUTRAL (CONT).

KNOWN INFO
Transmission control switches OK Transmission operates normally in forward and reverse. Clutch plates are OK.
POSSIBLE PROBLEMS
Pump assembly, sprag, or sprag races are worn. Low transmission oil level.

2.

Is transmission noise excessive in neutral?

NO → Go to Step 3 of this Fault.

YES → Fault not corrected. Repeat procedure and notify Supervisor.

TEST OPTIONS
Audible inspection.
REASON FOR QUESTION
If transmission is noisy in neutral only, the pump assembly, sprag, or sprag races are worn.

KNOWN INFO
Transmission control switches OK. Transmission operates normally in forward and reverse. Clutch plates are OK. Pump assembly, sprag, or sprag races are OK.
POSSIBLE PROBLEMS
Low transmission oil level.

3.

WARNING
Read WARNING on Page 4-295

Is transmission oil level correct?

NO → Add oil to transmission (TM 10-3930-669-10). Go to Step 4 of this Fault.

YES →

TEST OPTIONS
Visual inspection.
REASON FOR QUESTION
If transmission oil level is low, transmission will not function correctly in neutral.

www.truck-freeworkshop.com

WARNING

- Allow transmission to cool before performing maintenance. If necessary, use insulated pads and gloves.
- Transmission oil is slippery and can cause falls. To avoid injury, wipe up spilled oil with rags.

AUDIBLE INSPECTION

(1) Start engine (TM 10-3930-669-10).
(2) Listen to transmission for excessive noise.
(a) If transmission is not excessively noisy, perform Step (3) below and go to Step 3 of this Fault.
(b) If transmission is excessively noisy, fault not corrected. Perform Step (3) below. Repeat procedure and notify Supervisor.
(3) Shut down engine.

VISUAL INSPECTION

Check transmission oil level (TM 10-3930-669-10).

(a) If transmission oil level is low, add oil to correct level.
(b) If transmission oil level Is OK, go to Step 4 of this Fault.

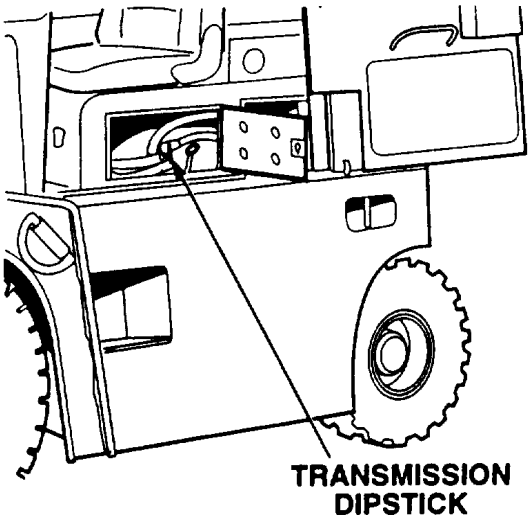

www.truck-freeworkshop.com

1. TRANSMISSION MALFUNCTIONS IN NEUTRAL (CONT).

KNOWN INFO
Transmission control switches OK. Transmission operates normally in forward and reverse. Clutch plates are OK. Pump assembly, sprag, or sprag races are OK. Transmission oil level OK.
POSSIBLE PROBLEMS

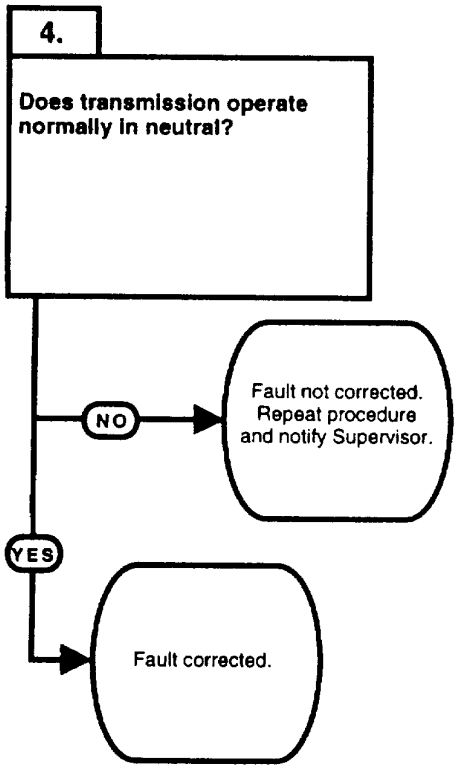

TEST OPTIONS
Verify repair.
REASON FOR QUESTION
If transmission operates normally in neutral, fault has been corrected.

www.truck-freeworkshop.com

VERIFY REPAIR
(1) Start engine (TM 10-3930-669-10). (2) Operate and observe forklift movement and listen to transmission operation (TM 10-3930-669-10). (a) If transmission does not operate normally, fault not corrected. Perform Step (3) below. Repeat procedure and notify Supervisor. (b) If transmission operates normally, fault corrected. (3) Shut down engine.

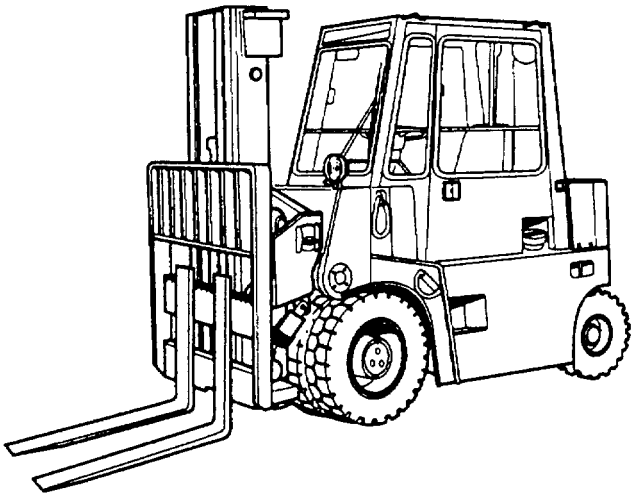

www.truck-freeworkshop.com

2-15. TRANSMISSION TROUBLESHOOTING (CONT).

2. TRANSMISSION MALFUNCTIONS IN FORWARD.

INITIAL SETUP

Tools and Special
Tool Kit, General Mechanic's: Automotive (Item 1, Appendix B)
STE/ICE-R (Item 14, Appendix B)
Pressure Test Kit (Item 2, Appendix B)

Tools References
TM 10-3930-669-10
LO 10-3930-669-12

Materials/Parts
Oil, Lubricating (MIL-L-2104) (Item 25, Appendix C)

Equipment Condition
MAIN POWER switch OFF (TM 10-3930-669-10)
Engine OFF (TM 10-3930-669-10)
Parking brake applied (TM 10-3930-669-10)

Personnel Required
Two

KNOWN INFO

Transmission control switches OK.
Transmission operates normally in neutral and reverse.
Transmission oil temperature gauge OK.
Tachometer OK.
Transmission forward solenoid OK.

POSSIBLE PROBLEMS

Clutch seized.
Transmission oil leaks.
Transmission oil level low.
Low transmission oil pressure.
Internal transmission oil leaks.
Engine idle speed too high.
Transmission oil pressure too high.
Clutch plates warped.
Broken, pitted, or cracked gear teeth.

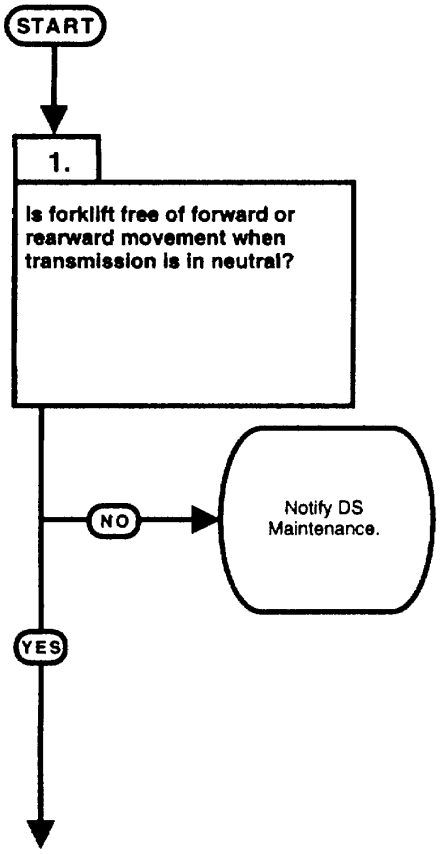

TEST OPTIONS

Visual inspection.

REASON FOR QUESTION

If forklift fails to move forward when transmission control lever is set to forward position, clutch may be seized.

www.truck-freeworkshop.com

VISUAL INSPECTION
(1) Start engine (TM 10-3930-669-10). (2) Place transmission control lever in the forward position and observe forklift for forward movement (TM 10-3930-669-10). (a) If forklift does not have forward movement, perform Step (3) below and notify DS Maintenance. (b) If forklift does have forward movement, clutch is OK. (3) Shut down engine.

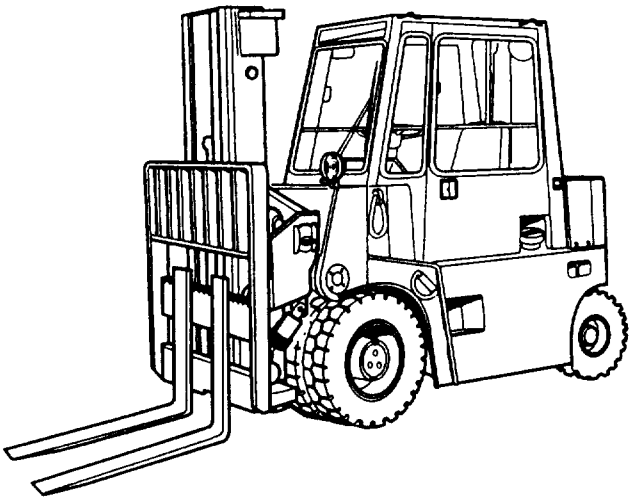

www.truck-freeworkshop.com

2. TRANSMISSION MALFUNCTIONS IN FORWARD (CONT).

KNOWN INFO

Transmission control switches OK.
Transmission operates normally in neutral and reverse.
Transmission oil temperature gauge OK.
Tachometer OK.
Transmission forward solenoid OK.
Clutch OK.

POSSIBLE PROBLEMS

Transmission oil leaks.
Transmission oil level low.
Low transmission oil pressure.
Internal transmission oil leaks.
Engine idle speed too high.
Transmission oil pressure too high.
Clutch plates warped.
Broken, pitted, or cracked gear teeth.

KNOWN INFO

Transmission control switches OK.
Transmission operates normally in neutral and reverse.
Transmission oil temperature gauge OK.
Tachometer OK.
Transmission forward solenoid OK.
Clutch OK.
Engine idle speed OK.
Transmission oil pressure is not too high.
Clutch plates OK.
Gear teeth OK.

POSSIBLE PROBLEMS

Transmission oil leaks.
Transmission oil level low.
Low transmission oil pressure.
Internal transmission oil leaks.

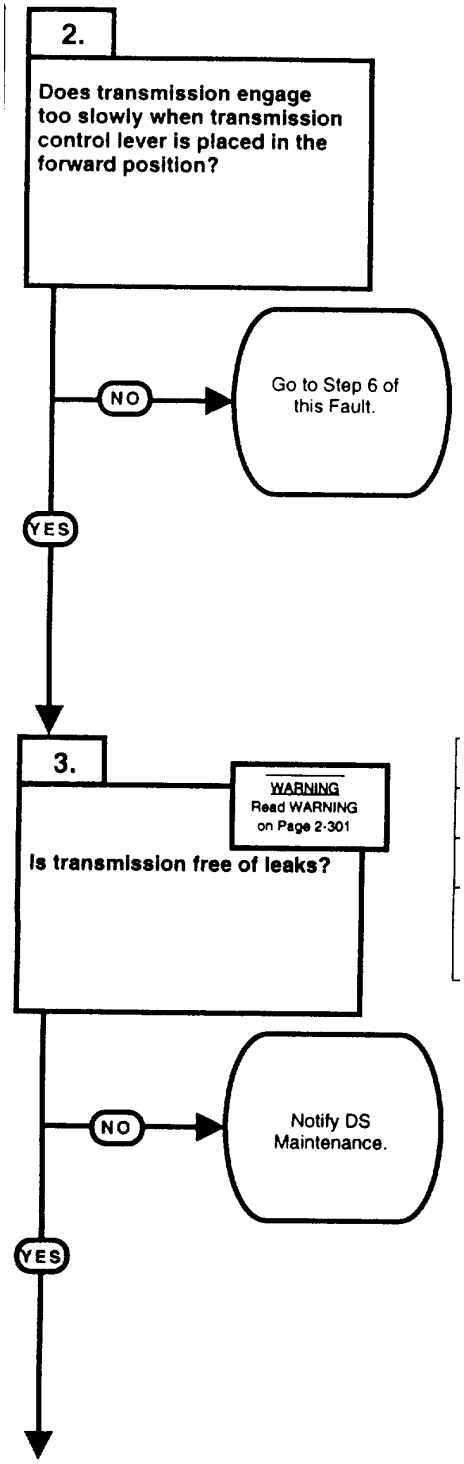

TEST OPTIONS

Visual inspection.

REASON FOR QUESTION

If transmission engages too slowly, transmission may have low oil level, leaks, low transmission oil pressure, or internal mechanical failure.

TEST OPTIONS

Visual inspection.

REASON FOR QUESTION

If transmission is leaking oil, transmission will engage too slowly.

www.truck-freeworkshop.com

WARNING

Transmission oil is slippery and can cause falls. To avoid injury, wipe up spilled oil with rags.

VISUAL INSPECTION

(1) Start engine (TM 10-3930-669-10).
(2) Set transmission control lever to forward position (TM 10-3930-669-10).
(3) Observe forklift for forward engagement of transmission.
(a) If forklift does not engage too slowly, perform Steps (4) and (5) below and go to Step 6 of this Fault.
(b) If transmission engages too slowly, perform Steps (4) and (5) below and go to Step 3 of this Fault.
(4) Apply parking brake.
(5) Place transmission control lever in the neutral position.

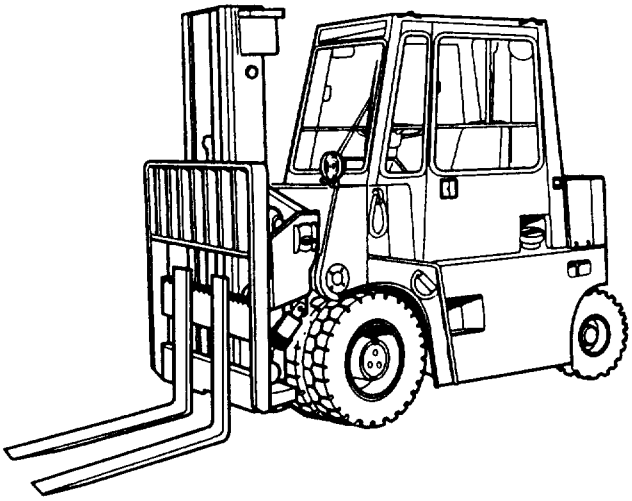

VISUAL INSPECTION

(1) Release parking brake (TM 10-3930-669-10).
(2) Place transmission control lever in the forward position (TM 10-3930-669-10).
(3) Move forklift forward approximately 10 ft (3 m) and observe surface which forklift was parked on for transmission oil.
(a) If transmission oil is present, transmission has oil leaks. Perform Step (4) below and notify DS Maintenance.
(b) If no transmission oil is present, transmission is not leaking.
(4) Shut down engine.

www.truck-freeworkshop.com

2. TRANSMISSION MALFUNCTIONS IN FORWARD (CONT).

KNOWN INFO
Transmission control switches OK. Transmission operates normally in neutral and reverse. Transmission oil temperature gauge OK. Transmission forward solenoid OK. Tachometer OK. Clutch OK. Engine idle speed OK. Transmission oil pressure is not too high. Clutch plates OK. Gear teeth OK. Transmission is not leaking oil.
POSSIBLE PROBLEMS
Transmission oil level low. Transmission oil pressure low. Internal transmission oil leaks.

4.

WARNING
Read WARNING on Page 2-303

Is transmission oil level low?

NO → Go to Step 5 of this Fault.

YES → Add oil to transmission (TM 10-3930-669-10). Go to Step 11 of this Fault.

TEST OPTIONS
Visual inspection.
REASON FOR QUESTION
II transmission oil level is low, transmission will engage too slowly.

KNOWN INFO
Transmission control switches OK. Transmission operates normally in neutral and reverse. Transmission oil temperature gauge OK. Transmission forward solenoid OK. Tachometer OK. Clutch OK. Engine idle speed OK. Transmission oil pressure is not too high. Clutch plates OK. Gear teeth OK. Transmission is not leaking oil. Transmission oil level OK.
POSSIBLE PROBLEMS
Transmission oil pressure low. Internal transmission oil leaks.

5.

Is transmission oil pressure below 10 psi (69 kPa) when engine is running at 1,300 rpm?

NO → Notify DS Maintenance.

YES → Fault not corrected. Repeat procedure and notify Supervisor.

TEST OPTIONS
Pressure test and STE/ICE-R #10.
REASON FOR QUESTION
If transmission oil pressure is low, transmission may have internal mechanical failure.

www.truck-freeworkshop.com

WARNING

Transmission oil is slippery and can cause falls. To avoid injury, wipe up spilled fuel or oil with rags.

VISUAL INSPECTION
Check transmission oil level (TM 10-3930-669-10). (a) If transmission oil level is OK, go to Step 5 of this Fault. (b) If transmission oil level is low, add oil to correct level.

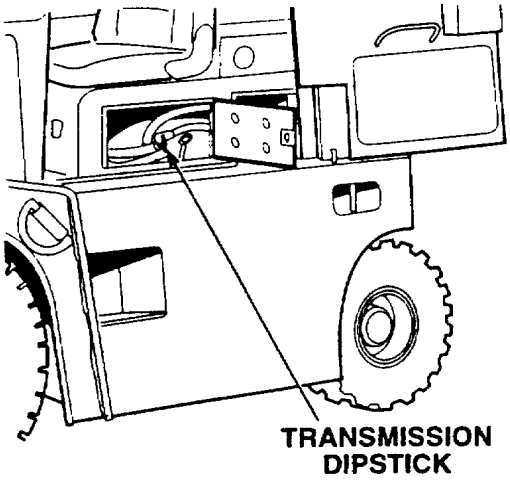

PRESSURE TEST AND STEACE-R #10
(1) Remove cap from tachometer drive. (2) Install pulse tachometer on tachometer drive. (3) Remove floor plate (Para 15-12). (4) Remove plug from transmission. (5) Start engine (TM 10-3930-669-10). (a) If 10 psi (69 kPa) is not displayed. perform Steps (6), (7) and (8) below. Repeat procedure and notify Supervisor. (b) If 10 pass (69 kPa) is displayed, transmission oil pressure is OK. (6) Shut down engine. (7) Remove pulse tachometer from tachometer drive. (8) Install cap on tachometer drive.

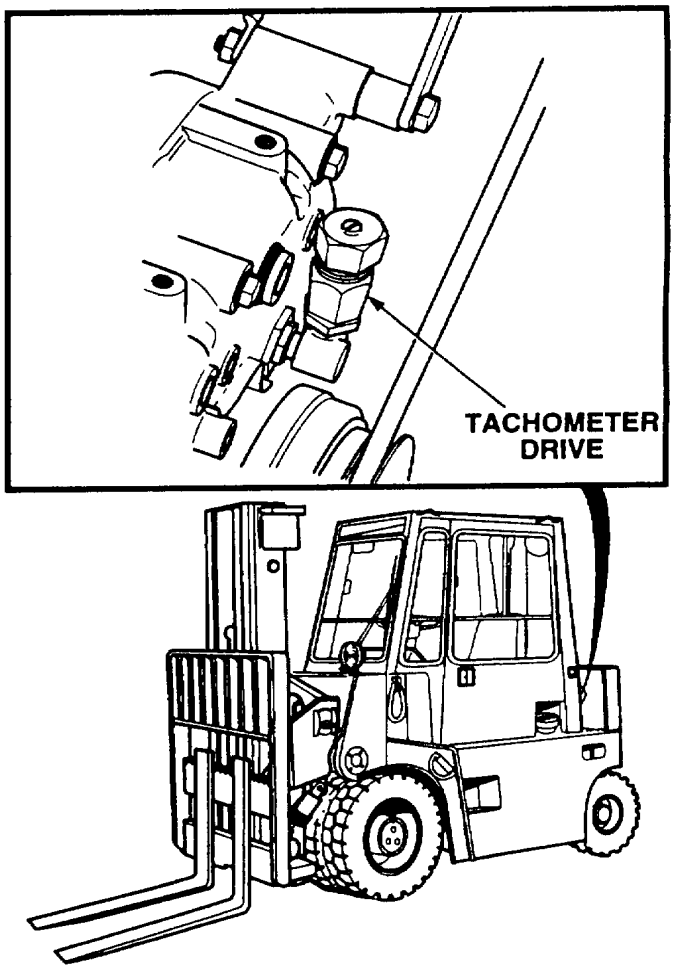

www.truck-freeworkshop.com

2. TRANSMISSION MALFUNCTIONS IN FORWARD (CONT).

KNOWN INFO

Transmission control switches OK.
Transmission operates normally in neutral and reverse.
Transmission oil temperature gauge OK.
Tachometer OK.
Transmission forward solenoid OK.
Clutch OK.
Transmission is not leaking oil.
Transmission oil level OK.
Transmission oil pressure is not low.
Transmission has no internal mechanical failures.

POSSIBLE PROBLEMS

Engine idle speed too high.
Transmission oil pressure too high.
Clutch plates warped.
Broken, pitted, or cracked gear teeth.

6. Does transmission engage too harshly when transmission control lever is placed in the forward position?

NO → Go to Step 9 of this Fault.

YES ↓

TEST OPTIONS

Visual inspection.

REASON FOR QUESTION

This question eliminates a possible problem or group of possible problems determining where troubleshooting continues.

TEST OPTIONS

STE/ACE-R #10.

REASON FOR QUESTION

If engine idle speed is above 750 rpm, transmission will engage too harshly.

KNOWN INFO

Transmission control switches OK.
Transmission operates normally in neutral and reverse.
Transmission oil temperature gauge OK.
Tachometer OK.
Transmission forward solenoid OK.
Clutch OK.
Transmission is not leaking oil.
Transmission oil level OK.
Transmission oil pressure is not low.
Transmission has no internal mechanical failures.
Clutch plates OK.
Gear teeth OK.

POSSIBLE PROBLEMS

Engine idle speed too high.
Transmission oil pressure too high.

7. Is engine idle speed between 625 to 750 rpm?

NO → Adjust engine idle speed (Para 4-7). Go to Step 11 of this Fault.

YES ↓

www.truck-freeworkshop.com

VISUAL INSPECTION
(1) Release parking brake (TM 10-3930-669-10). (2) Place transmission control lever to the forward position and observe the forklift (TM 10-3930-669-10). (a) If transmission does not engage too harshly, perform Step (4) below and go to Step 9 of this Fault. (b) If transmission engages too harshly, perform Steps (3) through (5) below and go to Step 7 of this Fault. (3) Shut down engine (TM 10-3930-669-10). (4) Apply parking brake. (5) Chock wheels (TM 10-3930-669-10).

STEFICE-ICE-R #10
(1) Remove cap from tachometer drive. (2) Install pulse tachometer on tachometer drive. (3) Start engine (TM 10-3930-669-10). (4) Observe VTM for results. (a) If 625 to 750 rpm is not displayed, perform Steps (5) and (6) below and adjust engine idle speed (Para 4-7). (b) If 625 to 750 rpm is displayed, perform Steps (5) through (7) below, engine idle is OK. (5) Shut down engine. (6) Remove pulse tachometer from tachometer drive. (7) Install cap on tachometer drive.

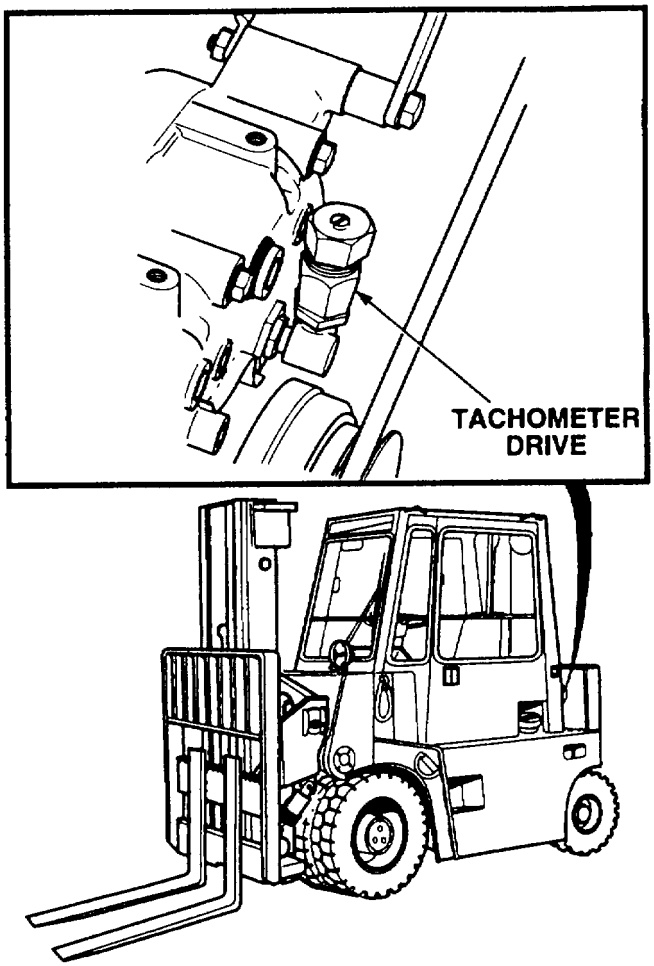

www.truck-freeworkshop.com

2. TRANSMISSION MALFUNCTIONS IN FORWARD (CONT).

KNOWN INFO

Transmission control switches OK.
Transmission operates normally in neutral and reverse.
Transmission oil temperature gauge OK.
Tachometer OK.
Transmission forward solenoid OK.
Clutch OK.
Transmission is not leaking oil.
Transmission oil level OK.
Transmission oil pressure is not low.
Transmission has no internal mechanical failures.
Engine idle speed OK.
Clutch plates OK.
Gear teeth OK.

POSSIBLE PROBLEMS

Transmission oil pressure too high.

8.

Is transmission oil pressure above 40 psi (276 kPa) when engine is running at 1,300 rpm?

NO → Fault not corrected. Repeat procedure and notify Supervisor.

YES → Notify DS Maintenance.

TEST OPTIONS

REASON FOR QUESTION

If transmission oil pressure is too high, transmission will engage too harshly.

KNOWN INFO

Transmission control switches OK.
Transmission operates normally in neutral and reverse.
Transmission oil temperature gauge OK.
Tachometer OK.
Transmission forward solenoid OK.
Clutch OK.
Transmission is not leaking oil.
Transmission oil level OK.
Transmission oil pressure is not low.
Transmission has no internal mechanical failures.
Engine idle speed OK.
Transmission oil pressure is not too high.

POSSIBLE PROBLEMS

Clutch plates warped.
Broken, pitted, or cracked gear teeth.

9.

Does forklift move forward too slowly when transmission control lever is placed in the forward position?

NO → Go to Step 10 of this Fault.

YES → Notify DS Maintenance.

TEST OPTIONS

Visual inspection.

REASON FOR QUESTION

If clutch plates are warped, forklift will move forward slowly when the transmission control lever is placed in the forward position.

www.truck-freeworkshop.com

PRESSURE TEST AND STE/ICE-R #10

(1) Remove cap from tachometer drive.
(2) Install pulse tachometer on tachometer drive.
(3) Remove floor plate (Para 15-12).
(4) Remove plug from transmission.
(5) Start engine (TM 10-3930-669-10).
(6) Observe VTM for results.
(a) If 625 to 750 rpm is not displayed, perform Steps (5) and (6) below and adjust engine idle speed (Para 4-7).
(b) If 625 to 750 rpm is displayed, perform Steps (7) through (9) below, engine idle is OK.
(7) Shut down engine.
(8) Remove pulse tachometer from tachometer drive.
(9) Install cap on tachometer drive.

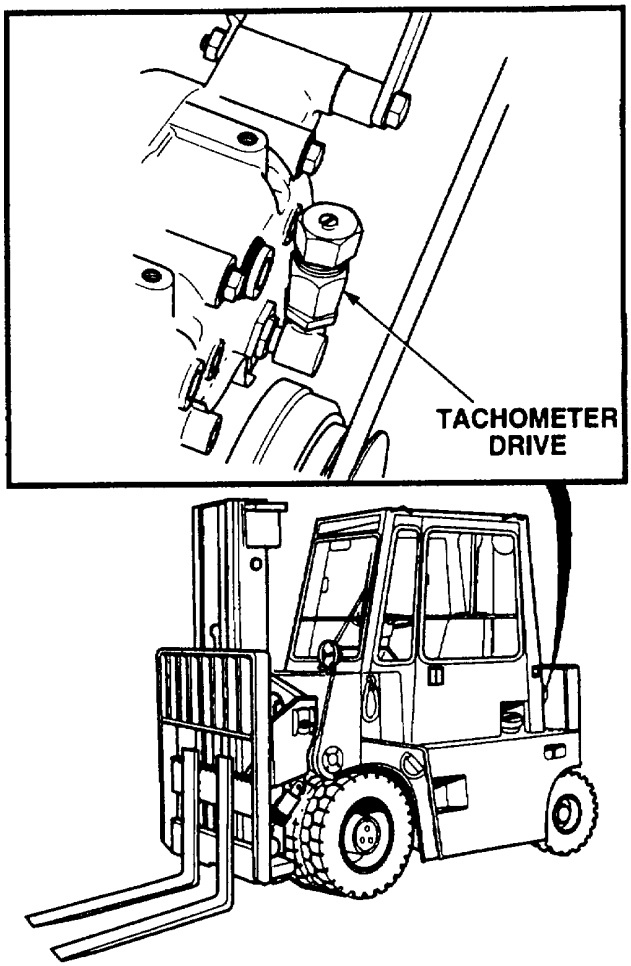

VISUAL INSPECTION

(1) Release parking brake (TM 10-3930-669-10).
(2) Place transmission control lever in the forward position and observe forklift forward movement (TM 10-3930-669-10).
(a) If forklift does not move forward too slowly, perform Step (3) below and go to Step 10 of this Fault.
(b) If forklift moves forward too slowly, perform Step (3) below and notify DS Maintenance.
(3) Shut down engine (TM 10-3930-669-10).

www.truck-freeworkshop.com

2. TRANSMISSION MALFUNCTIONS IN FORWARD (CONT).

KNOWN INFO

Transmission control switches OK.
Transmission operates normally in neutral and reverse.
Transmission oil temperature gauge OK.
Tachometer OK.
Transmission forward solenoid OK.
Clutch OK.
Transmission is not leaking oil.
Transmission oil level OK.
Transmission oil pressure is not low.
Transmission has no internal mechanical failure.
Engine idle speed OK.
Transmission oil pressure is not too high.
Clutch plates OK.

POSSIBLE PROBLEMS

Broken, pitted, or cracked gear teeth.

10.

Is transmission noise level normal when in forward?

NO → Notify DS Maintenance.

YES ↓

TEST OPTIONS

Audible inspection.

REASON FOR QUESTION

If transmission is excessively noisy, gear teeth may be broken, pitted, or cracked. ←

KNOWN INFO

Transmission control switches OK.
Transmission operates normally in neutral and reverse.
Transmission oil temperature gauge OK.
Tachometer OK.
Transmission forward solenoid OK.
Clutch OK.
Transmission is not leaking oil.
Transmission oil level OK.
Transmission oil pressure is not low.
Transmission has no internal mechanical failure.
Engine idle speed OK.
Transmission oil pressure is not too high.
Clutch plates OK.
Gear teeth OK.

POSSIBLE PROBLEMS

11.

Does transmission operate normally when the transmission control lever is placed in the forward position?

NO → Fault not corrected. Repeat procedure and notify Supervisor.

YES → Fault corrected.

TEST OPTIONS

Verify repair.

REASON FOR QUESTION

If transmission operates normally when the transmission control lever is placed in the forward position, fault has been corrected. ←

www.truck-freeworkshop.com

AUDIBLE INSPECTION
(1) Start engine (TM 10-3930-669-10). (2) Place transmission control lever in the forward position and listen to transmission (TM 10-3930-669-10). (a) If transmission makes excessive noise, perform Step (3) below and notify DS Maintenance. (b) If transmission does not make excessive noise, transmission is OK. (3) Shut down engine.

VERIFY REPAIR
(1) Start engine (TM 10-3930-669-10). (2) Place transmission control lever in the forward position and observe forklift (TM 10-3930-669-10). (a) If transmission does not operate normally, fault not corrected. Perform Step (3) below. Repeat procedure and notify Supervisor. (b) If transmission operates normally, fault corrected. (3) Shut down engine.

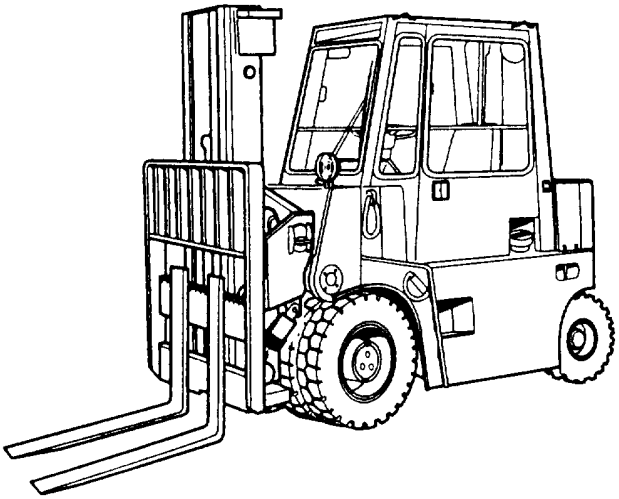

www.truck-freeworkshop.com

2-15. TRANSMISSION TROUBLESHOOTING (CONT).

3. TRANSMISSION MALFUNCTIONS IN REVERSE.

INITIAL SETUP

Tools and Special
Tool Kit, General Mechanic's: Automotive (Item 1, Appendix B)
STE/ICE-R (Item 14, Appendix B)
Pressure Test Kit (Item 2, Appendix B)

Materials/Parts
Oil, lubricating (MIL-L-2104) (Item 25, Appendix C)

Personnel Required
Two

Tools References
TM 10-3930-669-10
LO 10-3930-669-12

Equipment Condition
MAIN POWER OFF F(M 10-3930-669-10)
Engine switch OFF (TM 10-3930-669-10)

Parking brake applied (TM 10-3930-669-10)

KNOWN INFO

Transmission control switches OK.
Transmission operates normally in neutral and forward.
Transmission oil temperature gauge OK.
Transmission reverse solenoid OK.
Tachometer OK.

POSSIBLE PROBLEMS

Clutch seized.
Transmission oil leaks.
Transmission oil level low.
Low transmission oil pressure.
Internal transmission oil leaks.
Engine idle speed too high.
Transmission oil pressure too high.
Clutch plates warped.
Broken, pitted, or cracked gear teeth.

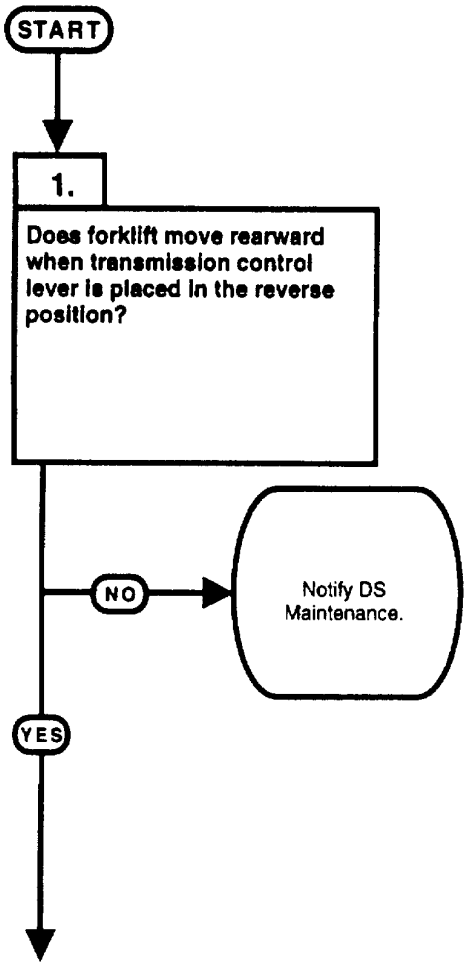

TEST OPTIONS

Visual inspection.

REASON FOR QUESTION

If forklift fails to move rearward when transmission control lever is set to reverse position, clutch may be seized.

www.truck-freeworkshop.com

VISUAL INSPECTION
(1) Start engine (TM 10-3930-669-10). (2) Place transmission control lever to the reverse position and observe forklift for rearward movement (TM 10-3930-669-10). (a) If forklift does not have rearward movement, perform Step (3) below and notify DS Maintenance. (b) If forklift does have rearward movement. Perform Step (3) below and go to Step 2 of this Fault. (3) Shut down engine.

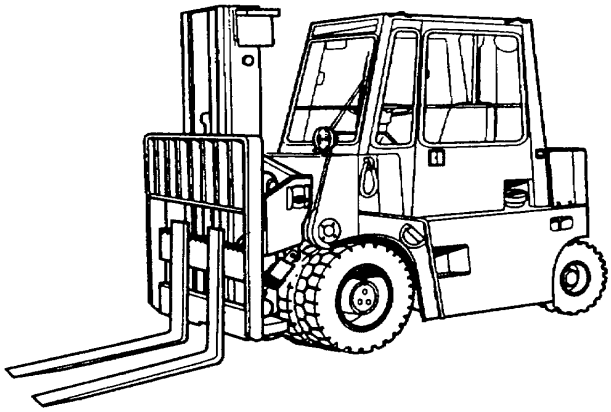

www.truck-freeworkshop.com

3. TRANSMISSION MALFUNCTIONS IN REVERSE (CONT).

KNOWN INFO

Transmission control switches OK.
Transmission operates normally in neutral and forward.
Transmission oil temperature gauge OK.
Transmission reverse solenoid OK.
Tachometer OK.
Clutch OK.

POSSIBLE PROBLEMS

Transmission oil leaks.
Transmission oil level low.
Low transmission oil pressure.
Internal transmission oil leaks.
Engine idle speed too high.
Transmission oil pressure too high.
Clutch plates warped.
Broken, pitted, or cracked gear teeth.

2.

Does transmission engage too slowly when transmission control lever is placed in the reverse position?

NO → Go to Step 6 of this Fault.

YES ↓

TEST OPTIONS

Visual inspection.

REASON FOR QUESTION

If transmission engages too slowly it may have low oil level, leaking, low transmission oil pressure, or internal mechanical failure.

TEST OPTIONS

Visual inspection.

REASON FOR QUESTION

If transmission is leaking oil, transmission will engage too slowly.

KNOWN INFO

Transmission control switches OK.
Transmission operates normally in neutral and forward.
Transmission oil temperature gauge OK.
Transmission reverse solenoid OK.
Tachometer OK.
Clutch OK.
Engine idle speed OK.
Transmission oil pressure is not too high.
Clutch plates OK.
Gear teeth OK.

POSSIBLE PROBLEMS

Transmission oil leaks.
Transmission oil level low.
Low transmission oil pressure.
Internal transmission oil leaks.

3.

WARNING
Read WARNING on Page 2-313

Is transmission free of leaks?

NO → Notify DS Maintenance.

YES ↓

www.truck-freeworkshop.com

WARNING

Transmission oil is slippery and can cause falls. To avoid injury, wipe up spilled fuel or oil with rags.

VISUAL INSPECTION

(1) Start engine (TM 10-3930-669-10).
(2) Set transmission control lever to reverse position and observe forklift rearward engagement of transmission (TM 10-3930-669-10).
(a) If forklift does not engage too slowly, perform Steps (3) and (4) below and go to Step 6 of this Fault.
(b) If transmission does engage too slowly, perform Steps (3) and (4) below and go to Step 3 of this Fault.
(3) Apply parking brake.
(4) Set transmission control lever to neutral position.

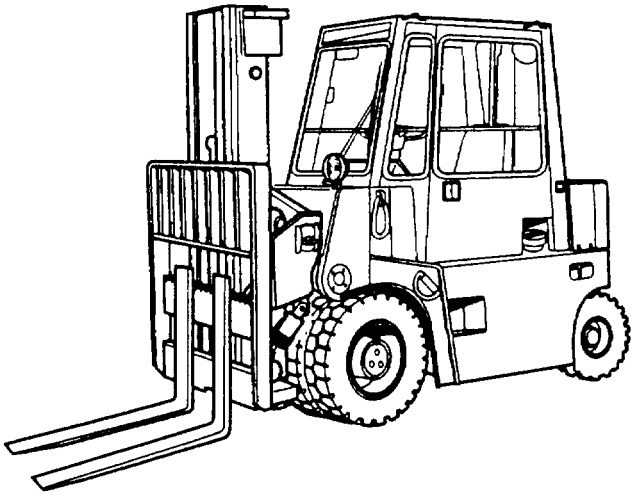

VISUAL INSPECTION

(1) Release parking brake (TM 10-3930-669-10).
(2) Set transmission control lever to reverse position (TM 10-3930-669-10).
(3) Move forklift rearward approximately 10 ft (3 m) and observe surface on which forklift was parked for transmission oil.
(a) If transmission oil is present, transmission has oil leaks. Perform Step (4) below and notify DS Maintenance.
(b) If no transmission oil is present, transmission is free from leaks.
(4) Shut down forklift.

www.truck-freeworkshop.com

3. TRANSMISSION MALFUNCTIONS IN REVERSE (CONT).

KNOWN INFO
Transmission control switches OK. Transmission operates normally in neutral and forward. Transmission oil temperature gauge OK. Transmission reverse solenoid OK. Tachometer OK. Clutch OK. Engine idle speed OK. Transmission oil pressure is not too high. Clutch plates OK. Gear teeth OK. Transmission is not leaking oil.
POSSIBLE PROBLEMS
Transmission oil level low. Transmission oil pressure low. Internal transmission oil leaks.

KNOWN INFO
Transmission control switches OK. Transmission operates normally in neutral and forward. Transmission oil temperature gauge OK. Transmission reverse solenoid OK. Tachometer OK. Clutch OK. Engine idle speed OK. Transmission oil pressure is not too high. Clutch plates OK. Gear teeth OK. Transmission is not leaking oil. Transmission oil level OK.
POSSIBLE PROBLEMS
Transmission oil pressure low. Internal transmission oil leaks.

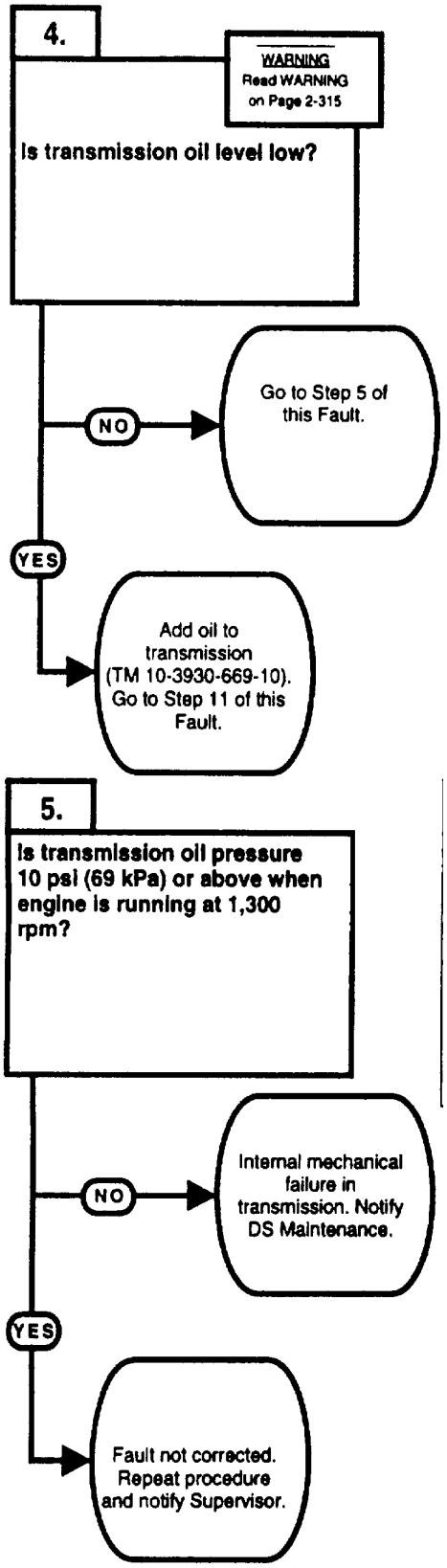

TEST OPTIONS
Visual inspection.
REASON FOR QUESTION
If transmission oil level is low, transmission will engage too slowly. ←

TEST OPTIONS
Pressure test and STE/ICE-R 010.
REASON FOR QUESTION
If transmission oil pressure is low, transmission may have internal mechanical failure and transmission will engage too slowly. ←

www.truck-freeworkshop.com

WARNING

- Allow transmission to cool before performing maintenance. If necessary, use insulated pads and gloves.
- Transmission oil is slippery and can cause falls. To avoid injury, wipe up spilled oil with rags.

VISUAL INSPECTION

Check transmission oil level (TM 10-3930-669-10).

(a) If transmission oil level is OK, Go to Step 5 of this Fault.

(b) If transmission oil level is low, add oil to correct level.

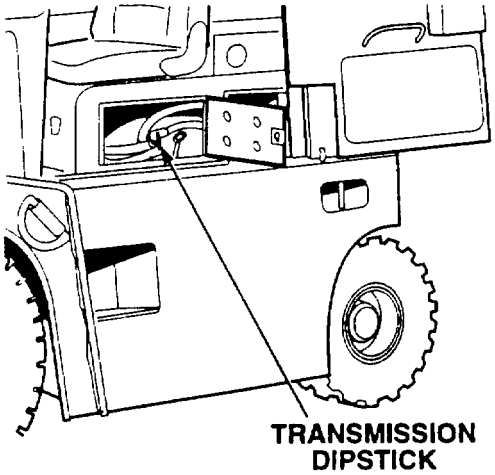

PRESSURE TEST AND STEACE-R #10

(1) Remove cap from tachometer drive.
(2) Remove floor plate (Para 15-12).
(3) Remove plug from transmission.
(4) Power up STE/ICE-R VTM in the TK mode (TM 9-4910-571-12&P).
(5) Start engine (TM 10-3930-669-10).
(6) Observe VTM for results.

(a) If 625 to 750 rpm is not displayed, perform Steps (7) and (8) below and adjust engine idle speed (Para 4-7).

(b) If 625 to 750 rpm is displayed, perform Steps (7) through (9) below, engine idle is OK.

(7) Shut down engine.
(8) Remove pulse tachometer from tachometer drive.
(9) Install cap on tachometer drive.

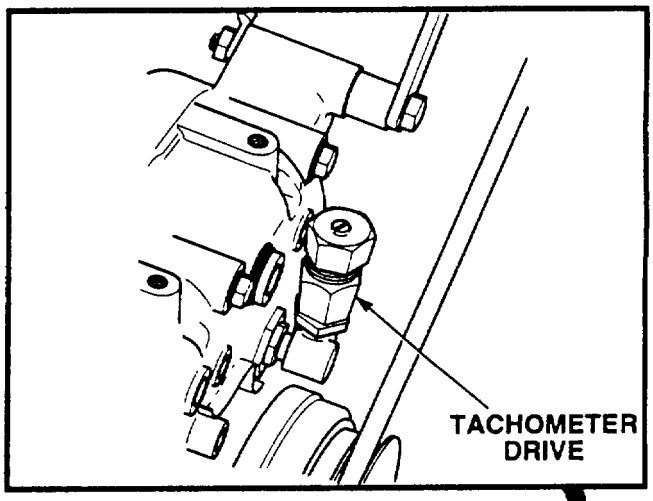

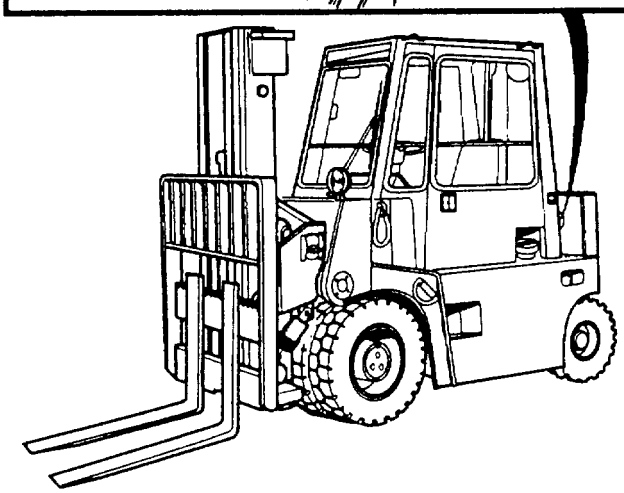

www.truck-freeworkshop.com

3. TRANSMISSION MALFUNCTIONS IN REVERSE (CONT).

KNOWN INFO

Transmission control switches OK.
Transmission operates normally in neutral and reverse.
Transmission oil temperature gauge OK.
Transmission reverse solenoid OK.
Tachometer OK.
Clutch OK.
Transmission is not leaking oil.
Transmission oil level OK.
Transmission oil pressure is not low.
Transmission has no internal mechanical failures.

POSSIBLE PROBLEMS

Engine idle speed too high.
Transmission oil pressure too high.
Clutch plates warped.
Broken, pitted, or cracked gear teeth.

6. Does transmission engage too harshly when transmission control lever is placed in the reverse position?

NO → Go to Step 9 of this Fault.

YES ↓

TEST OPTIONS

Visual inspection.

REASON FOR QUESTION

If engine idle speed or transmission oil pressure is too high, transmission will engage too harshly. ←

KNOWN INFO

Transmission control switches OK.
Transmission operates normally in neutral and reverse.
Transmission oil temperature gauge OK.
Transmission reverse solenoid OK.
Tachometer OK.
Clutch OK.
Transmission is not leaking oil.
Transmission oil level OK.
Transmission oil pressure is not low.
Transmission has no internal mechanical failures.
Clutch plates OK.
Gear teeth OK.

POSSIBLE PROBLEMS

Engine idle speed too high.
Transmission oil pressure too high.

7. Is engine idle speed between 625 to 750 rpm?

NO → Adjust engine idle speed (Para 4-7). Go to Step 11 of this Fault.

YES ↓

TEST OPTIONS

STE/ICE-R #10.

REASON FOR QUESTION

If engine idle speed is above 750 rpm, transmission will engage too harshly. ←

www.truck-freeworkshop.com

VISUAL INSPECTION

(1) Release parking brake (TM 10-3930-669-10).
(2) Set transmission control lever to reverse position and observe engagement.
(a) If transmission does not engage too harshly, perform Step (3) below and go to Step 9 of this Fault.
(b) If transmission engages too harshly, perform Step (3) below and go to Step 7 of this Fault.
(3) Shut down forklift (TM 10-3930-669-10).

STE/ICE-R #10

(1) Remove cap from tachometer drive.
(2) Install pulse tachometer on tachometer drive.
(3) Remove floor plate (Para 15-12).
(4) Remove plug from transmission.
(5) Connect a 0 to 2,000 psi (0-13,790 kPa) pressure gauge to transmission.
(6) Start engine (TM 10-3930-669-10).
(7) Observe VTM for results.
(a) If 625 to 750 rpm is not displayed, perform Steps (8) and (9) below and adjust engine idle speed (Para 4-7).
(b) If 625 to 750 rpm is displayed, perform Steps (8) through (10) below, engine idle is OK.
(8) Shut down engine.
(9) Remove pulse tachometer from tachometer drive.
(10) Install cap on tachometer drive.

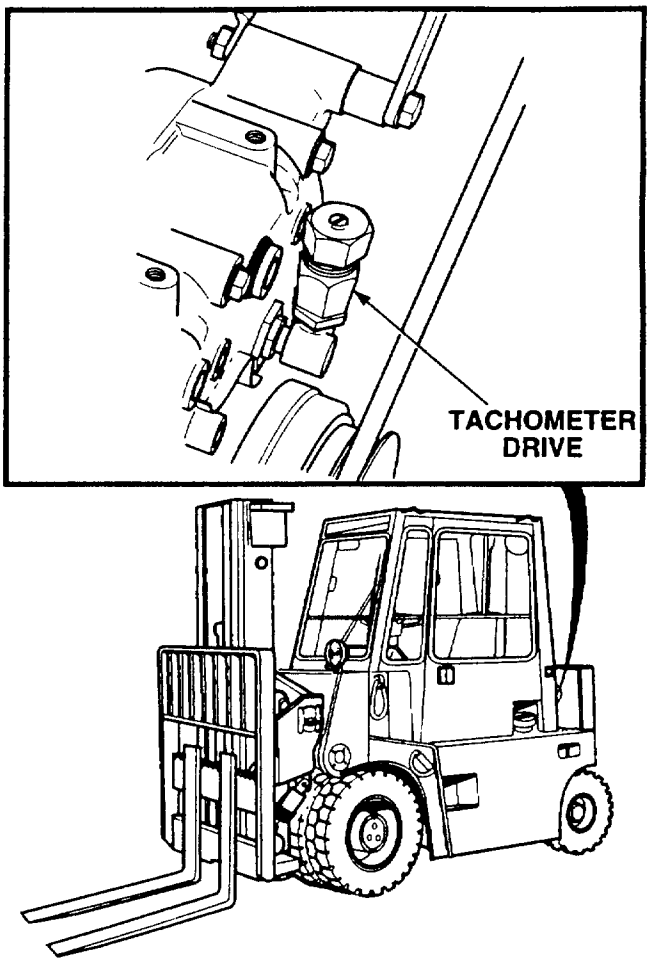

www.truck-freeworkshop.com

3. TRANSMISSION MALFUNCTIONS IN REVERSE (CONT).

KNOWN INFO
Transmission control switches OK. Transmission operates normally in neutral and reverse. Transmission oil temperature gauge OK. Transmission reverse solenoid OK. Tachometer OK. Clutch OK. Transmission is not leaking oil. Transmission oil level OK. Transmission oil pressure is not low. Transmission has no internal mechanical failures. Engine idle speed OK. Clutch plates OK. Gear teeth OK.
POSSIBLE PROBLEMS
Transmission oil pressure too high.

KNOWN INFO
Transmission control switches OK. Transmission operates normally in neutral and reverse. Transmission oil temperature gauge OK. Transmission reverse solenoid OK. Tachometer OK. Clutch OK. Transmission is not leaking oil. Transmission oil level OK. Transmission oil pressure is not low. Transmission has no internal mechanical failures. Engine idle speed OK. Transmission oil pressure is not too high.
POSSIBLE PROBLEMS
Clutch plates warped. Broken, pitted, or cracked gear teeth.

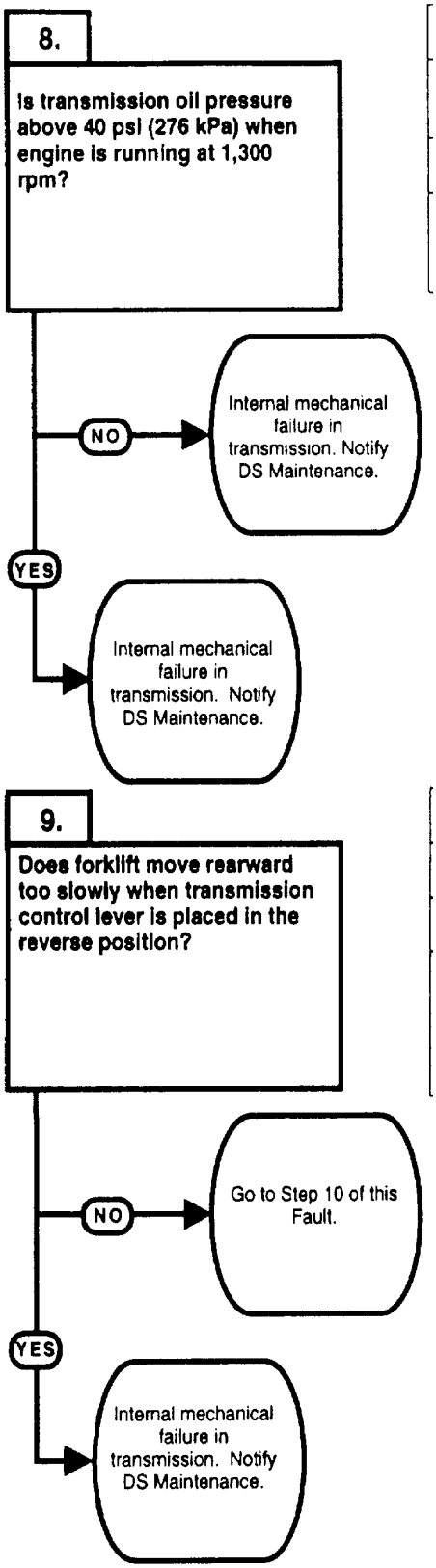

TEST OPTIONS
Pressure test and STE/ICE-R #10.
REASON FOR QUESTION
If transmission oil pressure is too high, transmission will engage too harshly.

TEST OPTIONS
Visual inspection.
REASON FOR QUESTION
If clutch plates are warped, forklift will move rearward slowly when the transmission control lever is placed in the reverse position.

www.truck-freeworkshop.com

PRESSURE TEST AND STEAICE-R #10
(1) Remove cap from tachometer drive. (2) Install pulse tachometer on tachometer drive. (3) Remove floor plate (Para 15-12). (4) Remove plug from transmission. (5) Start engine (TM 10-3930-669-10). (6) Observe VTM for results. (a) If 625 to 750 rpm is not displayed, perform Steps (7) and (B) below and adjust engine idle speed (Para 4-7). (b) If 625 to 750 rpm is displayed. perform Steps (7) through (10) below, engine idle is OK. (7) Shut down engine. (8) Remove pulse tachometer from tachometer drive. (9) Install cap on tachometer drive.

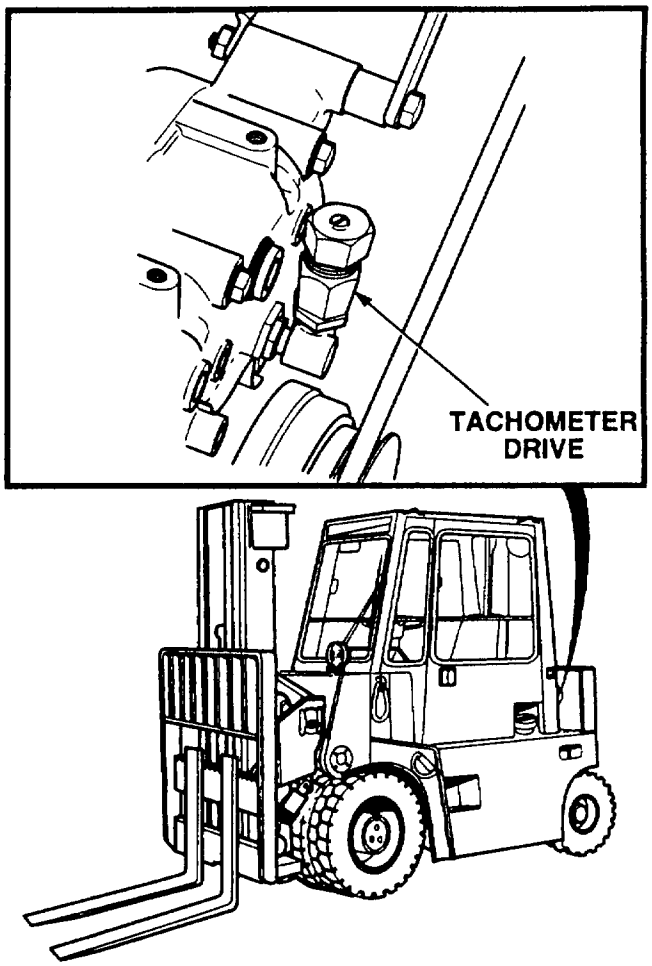

VISUAL INSPECTION
(1) Start engine (TM 10-3930-669-10). (2) Set transmission control lever in reverse position and observe forklift rearward movement (TM 10-3930-669-10). (a) If forklift does not move rearward too slowly, perform Step (3) below and go to Step 10 of this Fault. (b) If forklift moves rearward too slowly, perform Step (3) below and notify DS Maintenance. (3) Shut down engine.

www.truck-freeworkshop.com

3. TRANSMISSION MALFUNCTIONS IN REVERSE (CONT).

KNOWN INFO

Transmission control switches OK.
Transmission operates normally in neutral and reverse.
Transmission oil temperature gauge OK.
Transmission reverse solenoid OK.
Tachometer OK.
Clutch OK.
Transmission is not leaking oil.
Transmission oil level OK.
Transmission oil pressure is not low.
Transmission has no internal mechanical failure.
Engine idle speed OK.
Transmission oil pressure is not too high.
Clutch OK.

POSSIBLE PROBLEMS

Broken, pitted, or cracked gear teeth.

10. Is transmission noise level normal when in reverse?

NO → Notify DS Maintenance.

YES ↓

TEST OPTIONS

Audible inspection.

REASON FOR QUESTION

If transmission is excessively noisy, gear teeth may be broken, pitted, or cracked.

KNOWN INFO

Transmission control switches OK.
Transmission operates normally in neutral and reverse.
Transmission oil temperature gauge OK.
Transmission reverse solenoid OK.
Clutch OK.
Transmission is not leaking oil.
Transmission oil level OK.
Transmission oil pressure is not low.
Transmission has no internal mechanical failure.
Engine idle speed OK.
Transmission oil pressure is not too high.
Clutch OK.
Gear teeth OK.

POSSIBLE PROBLEMS

11. Does transmission operate normally when the transmission control lever is set in reverse position?

NO → Fault not corrected. Repeat procedure and notify Supervisor.

YES → Fault corrected.

TEST OPTIONS

Verify repair.

REASON FOR QUESTION

If transmission operates normally when the transmission control lever is set in reverse position, fault has been corrected.

www.truck-freeworkshop.com

AUDIBLE INSPECTION
(1) Start engine (TM 10-3930-669-10). (2) Set transmission control lever in reverse position and listen to transmission (TM 10-3930-669-10). (a) If transmission makes excessive noise, perform Step (3) below and notify DS Maintenance. (b) If transmission does not make excessive noise, transmission is OK. (3) Shut down engine.

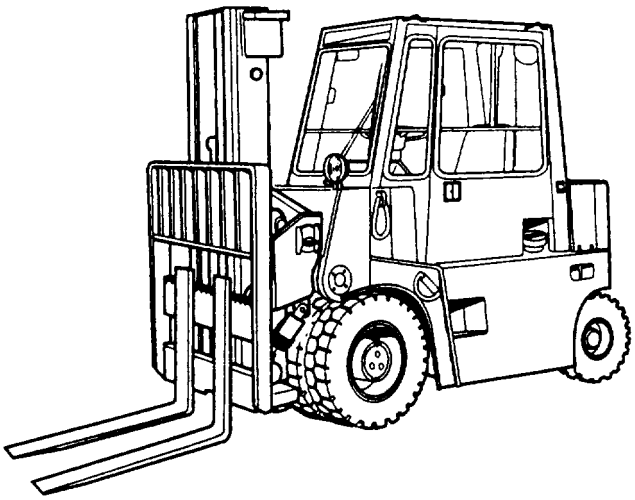

VERIFY REPAIR
(1) Start engine (TM 10-3930-669-10). (2) Set transmission control lever in reverse position and observe forklift (TM 10-3930-669-10). (a) If transmission does not operate normally, fault not corrected. Perform Step (3) below. Repeat procedure and notify Supervisor. (b) If transmission operates normally, fault corrected. (3) Shut down engine.

www.truck-freeworkshop.com

2-15 TRANSMISSION TROUBLESHOOTING (CONT).

4. TRANSMISSION MALFUNCTIONS IN FORWARD AND REVERSE.

INITIAL SETUP

Tools and Special Tools
Tool Kit, General Mechanic's: Automotive (Item 1, Appendix B)
STE/ICE-R (Item 14, Appendix B)
Pressure Test Kit (Item 2, Appendix B)

Materials/Parts
Oil, Lubricating (MIL-L-2104) (Item 25, Appendix C)

Personnel Required
Two

References
TM 10-3930-669-10
LO 10-3930-669-12

Equipment Condition
MAIN POWER switch OFF (TM 10-3930-669-10)
Engine OFF (TM 10-3930-669-10)
Parking brake applied (TM 10-3930-669-10)

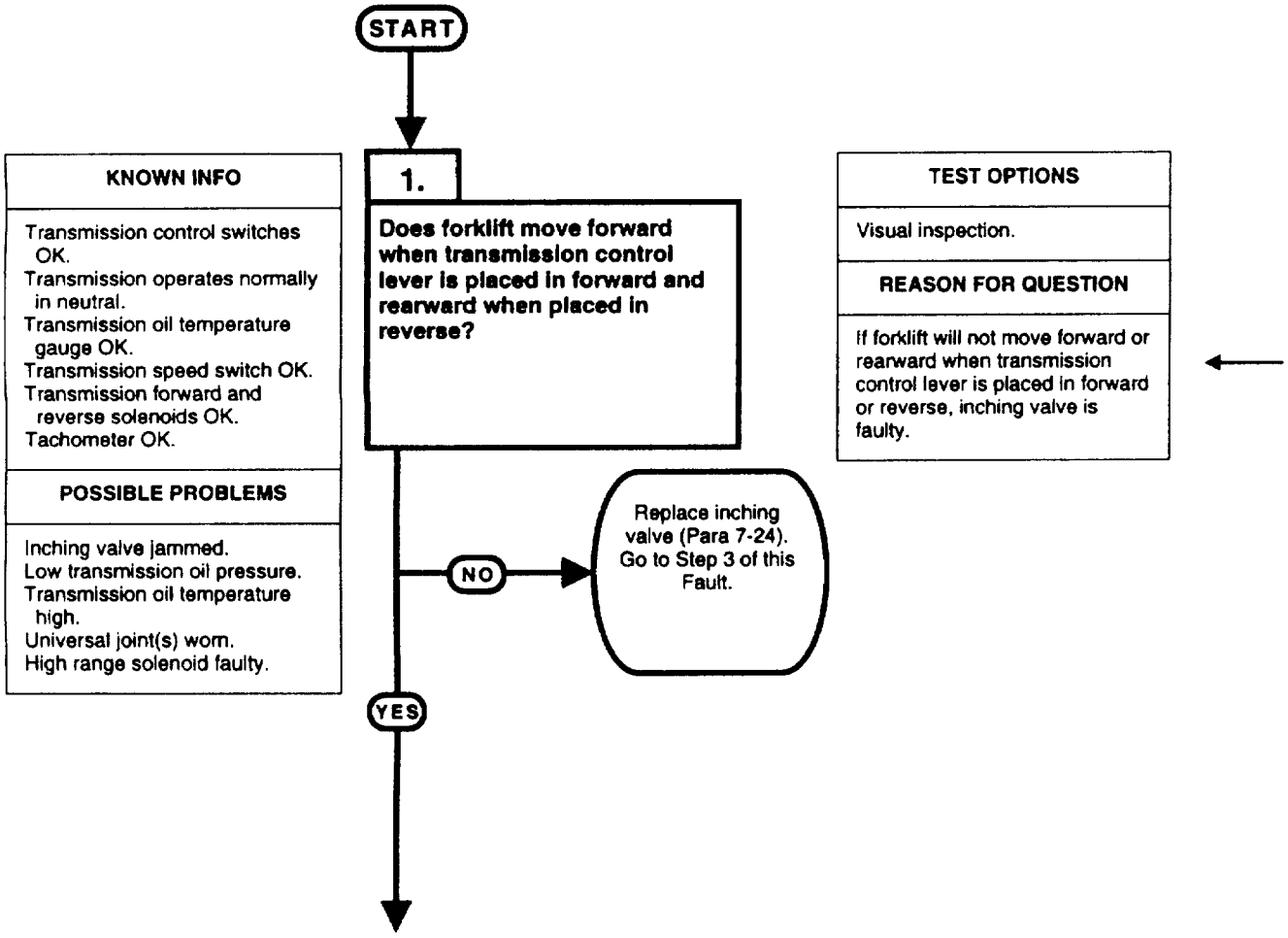

www.truck-freeworkshop.com

VISUAL INSPECTION
(1) Start engine (TM 10-3930-669-10). (2) Set transmission control lever in the forward and to reverse position and observe forklift (TM 10-3930-669-10). (a) If transmission does not move forward or rearward, regulator valve is jammed. Replace inching valve (Para 7-24) and perform Step (3) below and go to Step 3 of this Fault. (b) If transmission moves forward and rearward, inching valve is not jammed, perform Step (3) below and go to Step 2 below. (3) Shut down engine.

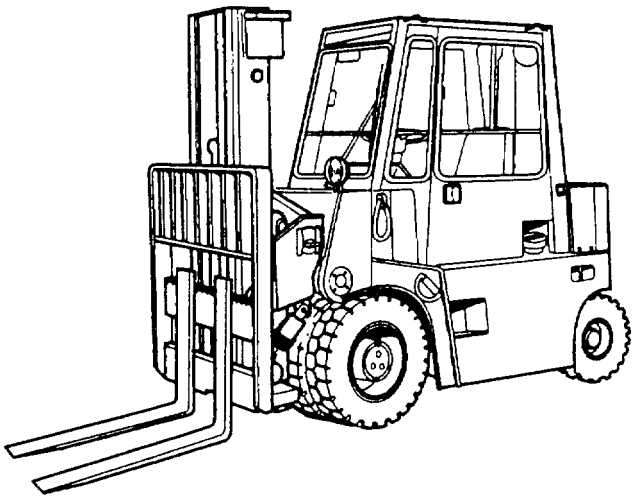

www.truck-freeworkshop.com

4. TRANSMISSION MALFUNCTIONS IN FORWARD AND REVERSE (CONT).

KNOWN INFO

Transmission control switches OK.
Transmission operates normally In neutral.
Transmission oil temperature gauge OK.
Transmission speed switch OK.
Transmission forward and reverse solenoids OK.
Tachometer OK.
inching valve OK.

POSSIBLE PROBLEMS

Low transmission oil pressure.
Transmission oil temperature high.
Universal joint(s) wom.
High range solenoid faulty.

KNOWN INFO

Transmission control switches OK.
Transmission operates normally in neutral.
Transmission oil temperature gauge OK.
Transmission speed switch OK.
Transmission forward and reverse solenoids OK
Tachometer OK.
Inching valve OK.
Transmission oil pressure OK.

POSSIBLE PROBLEMS

Transmission oil temperature high.
Universal joint(s) worn.
High range solenoid faulty.

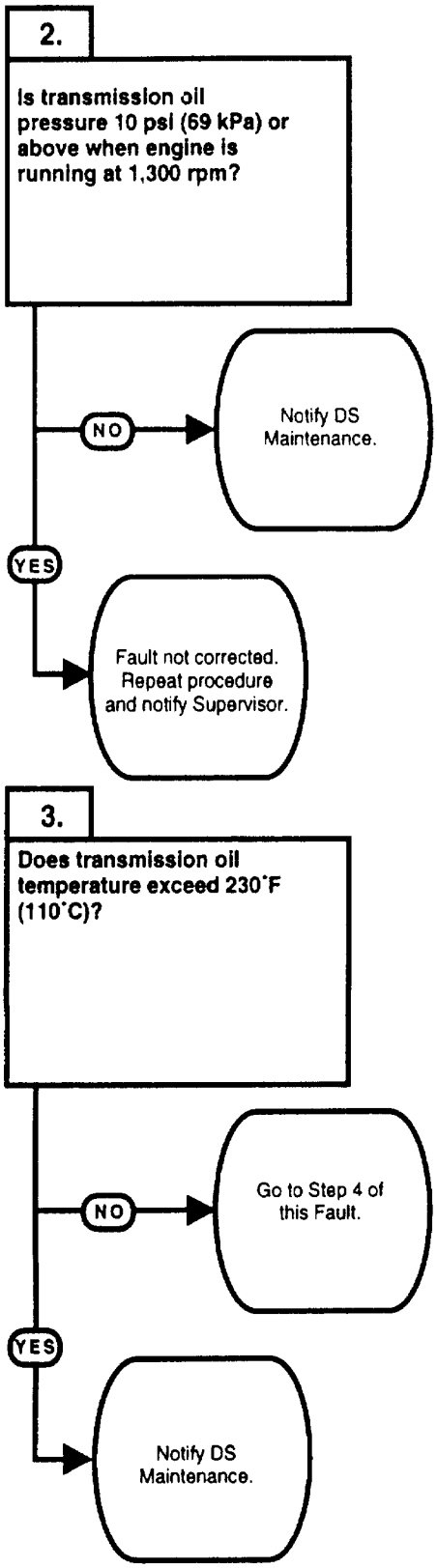

TEST OPTIONS

Pressure test and STE/ICE-R #10.

REASON FOR QUESTION

If transmission oil pressure is low, transmission has an internal leak, and forklift will not move forward or rearward when transmission control lever is placed in forward or reverse.

TEST OPTIONS

Visual Inspection.
STEACE-R #38.

REASON FOR QUESTION

If transmission oil temperature is high, transmission may have an internal failure.

www.truck-freeworkshop.com

PRESSURE TEST AND STEFICE-R #10

(1) Remove cap from tachometer drive.
(2) Install pulse tachometer on tachometer drive.
(3) Remove floor plate (Para 15-12).
(4) Remove plug from transmission.
(5) Start engine (TM 10-3930-669-10).
(6) Observe VTM for results.
  (a) If 625 to 750 rpm is not displayed, perform Steps (7) and (8) below and adjust engine idle speed (Para 4-7).
  (b) If 625 to 750 rpm is displayed, perform Steps (7) through (9) below, engine idle is OK.
(7) Shut down engine.
(8) Remove pulse tachometer from tachometer drive.
(9) Install cap on tachometer drive.

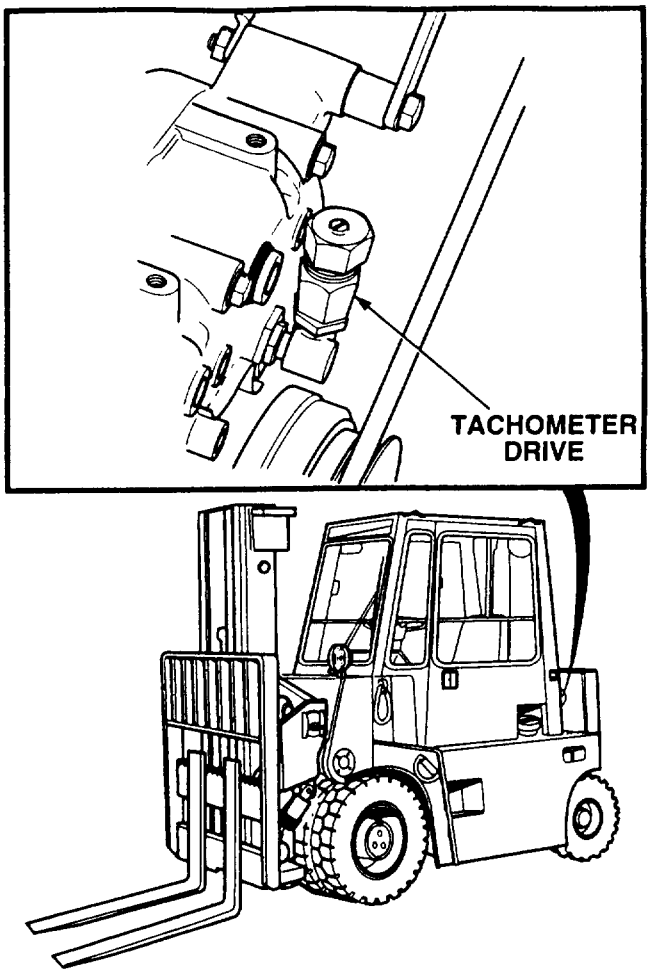

VISUAL INSPECTION

(1) Start engine (TM 10-3930-669-10).

(2) Set transmission control lever to forward position (TM 10-3930-669-10).
(3) While observing transmission temperature gauge, operate forklift for 10 to 15 minutes.

  (a) If transmission oil temperature does not exceed 230°F (110°C), perform Steps (4) and (5) below and go to Step 4 of this Fault.
  (b) If transmission oil temperature exceeds 230°F (110°C), perform Step (6) below and notify DS Maintenance.
(4) Apply parking brake.
(5) Set transmission control lever to neutral position.
(6) Shut down engine.

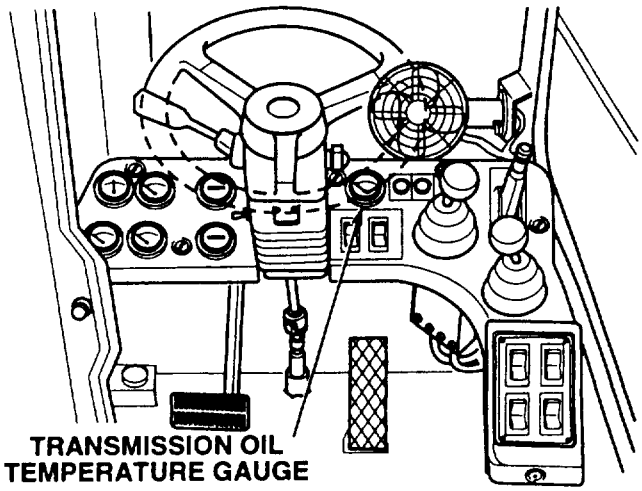

www.truck-freeworkshop.com

4. TRANSMISSION MALFUNCTIONS IN FORWARD AND REVERSE (CONT).

KNOWN INFO
Transmission control switches OK. Transmission operates normally in neutral. Transmission oil temperature gauge OK. Transmission speed switch OK. Transmission forward and reverse solenoids OK Tachometer OK. Inching valve OK. Transmission oil pressure OK. Transmission oil temperature OK.
POSSIBLE PROBLEMS
Universal joint(s) worn. High range solenoid faulty.

4.

Is there excessive noise from transmission area when in forward and reverse?

NO → Go to Step 5 of this Fault.

YES → Replace universal joint(s) (Para 9-2). Go to Step 6 of this Fault.

TEST OPTIONS
Audible inspection.
REASON FOR QUESTION
If transmission is excessively noisy in forward and reverse, universal joint(s) may be worn.

KNOWN INFO
Transmission control switches OK. Transmission operates normally in neutral. Transmission oil temperature gauge OK. Transmission speed switch OK. Transmission forward and reverse solenoids OK Tachometer OK. Inching valve OK. Transmission oil pressure OK. Transmission oil temperature OK. Universal joint(s) OK.
POSSIBLE PROBLEMS
High range solenoid faulty.

5.

Does transmission change from low to high speed or from high to low speed when transmission high range switch is placed in high or low speed?

NO → Notify DS Maintenance.

YES →

TEST OPTIONS
Visual inspection.
REASON FOR QUESTION
If transmission will not change from low to high speed or high to low speed, high range solenoid may be faulty.

www.truck-freeworkshop.com

AUDIBLE INSPECTION

(1) Release parking brake (TM 10-3930-669-10).
(2) Operate forklift in forward and reverse while listening for excessive noise (TM 10-3930-669-10).
  (a) If there is not excessive noise from transmission area in both forward and reverse, perform Steps (3) and (4) below and go to Step 5 of this Fault.
  (b) If there is excessive noise from the transmission area in both forward and reverse, perform Step (5) below and replace worn universal joint(s) (Para 9-2).
(3) Apply parking brake.
(4) Place transmission control lever to the neutral position.
(5) Shut down engine.

VISUAL INSPECTION

(1) Release parking brake (TM 10-3930-669-10).
(2) Set transmission control lever to forward position (TM 10-3930-669-10).
(3) Operate forklift and set transmission speed switch to HIGH RANGE position and observe forklift (TM 10-3930-669-10).
  (a) If transmission does not change to high speed, high range solenoid faulty. Perform Step (5) below and notify DS Maintenance.
  (b) If transmission changes to high speed, go to Step (4) below.
(4) Operate forklift and set transmission speed switch to LOW RANGE position and observe forklift.
  (a) If transmission does not change to low speed, high range solenoid faulty. Perform Step (5) below and notify DS Maintenance.
  (b) If transmission changes to low speed, transmission high range solenoid is OK.
(5) Shut down engine

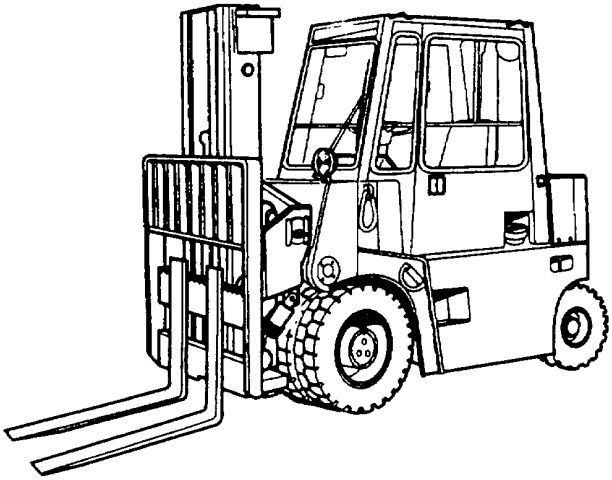

www.truck-freeworkshop.com

4. TRANSMISSION MALFUNCTIONS IN FORWARD AND REVERSE (CONT).

KNOWN INFO
Transmission control switches OK. Transmission operates normally in neutral. Transmission oil temperature gauge OK. Transmission speed switch OK. Transmission forward and reverse solenoids OK Tachometer OK. Inching valve OK. Transmission oil pressure OK. Transmission oil temperature OK. Universal joint(s) OK. High range solenoid OK.
POSSIBLE

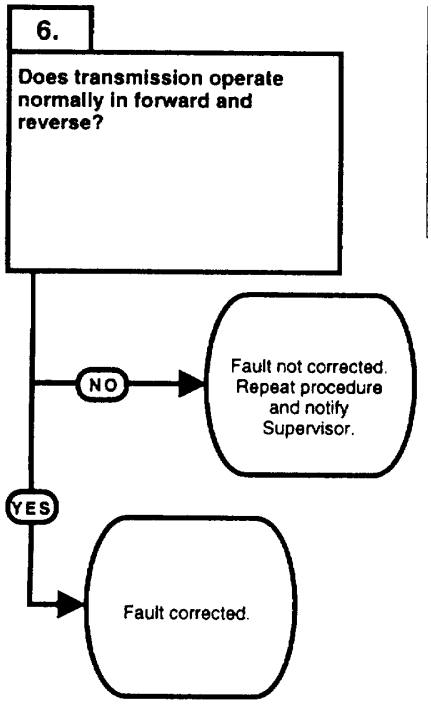

TEST OPTIONS
Verify repair.
REASON FOR QUESTION
If transmission operates normally in forward and reverse, fault has been corrected.

www.truck-freeworkshop.com

VERIFY REPAIR
(1) Start engine (TM 10-3930-669-10). (2) Operate forklift and observe for normal operation in forward and reverse (TM 10-3930-669-10). (a) If transmission does not operate normally In forward and reverse, fault not corrected. Perform Step (3) below. Repeat procedure and notify Supervisor. (b) If transmission operates normally in forward and reverse, fault corrected. (3) Shut down engine.

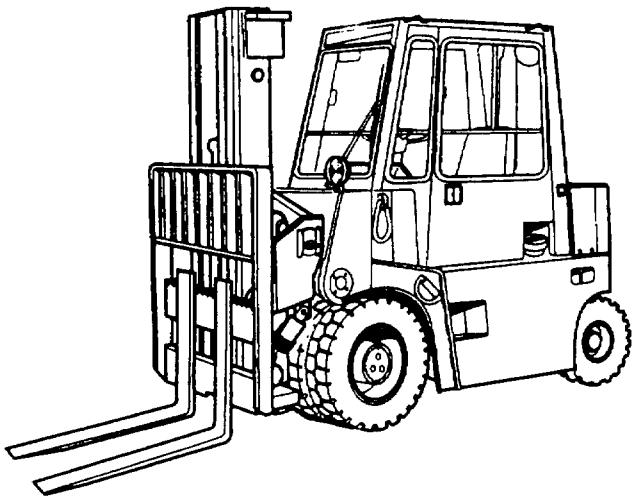

www.truck-freeworkshop.com

This Page Intentionally Left Blank

www.truck-freeworkshop.com

2-16. DRIVE AXLE SYSTEM TROUBLESHOOTING.

This paragraph covers the Drive Axle System Troubleshooting. The Axle Fault Index, Table 2-7, lists faults for the drive axle of the forklift.

Table 2-7. Axle Fault Index

Fault No.	Troubleshooting Procedure	Page
1.	Drive Axle Overheating	2-332
2.	Drive Axle Noise Greater Under Power Than During Coast	2-380
3.	Drive Axle Engaging Harshly When Switching Direction	2-384

www.truck-freeworkshop.com

2-16. DRIVE AXLE SYSTEM TROUBLESHOOTING (CONT).

1. DRIVE AXLE OVERHEATING.

INITIAL SETUP	
Tools and Special Tools Tool Kit, General Mechanic's: Automotive (Item 1, Appendix B) Pressure Test Kit (Item 2, Appendix B) STE(Optional) (Item 14, Appendix B) References TM 10-3930-669-10 LO 10-3930-669-12	Equipment Condition Engine OFF (TM 10-3930-669-10) MAIN POWER switch OFF (TM 10-3930-669-10) Parking brake applied (TM 10-3930-669-10) Wheels chocked (TM 10-3930-669-10)

KNOWN INFO
Engine temperature 105°F or over. Glow plug indicator operates.
POSSIBLE PROBLEMS
Parking brake dragging. Brake fluid faulty. Drive axle oil level incorrect. Master cylinder faulty. Drive axle faulty. Drive axle oil cooler ground wire faulty. Drive axle oil cooler faulty. Relay R7 ground wire faulty. Wire 29 to relay R7 faulty. Wire 73 faulty. Relay R7 faulty. Wire 29 to engine temperature switch faulty. Engine temperature switch faulty. Wire 71 faulty. Axle oil pump ground wire fault. Axle oil pump faulty. Relay R8 ground wire faulty. Wire 29 to relay R8 faulty. Wire 74 faulty. Relay R8 faulty. Wire 29 to drive axle temperature switch faulty. Drive axle oil temperature switch faulty. Wire 72 faulty.

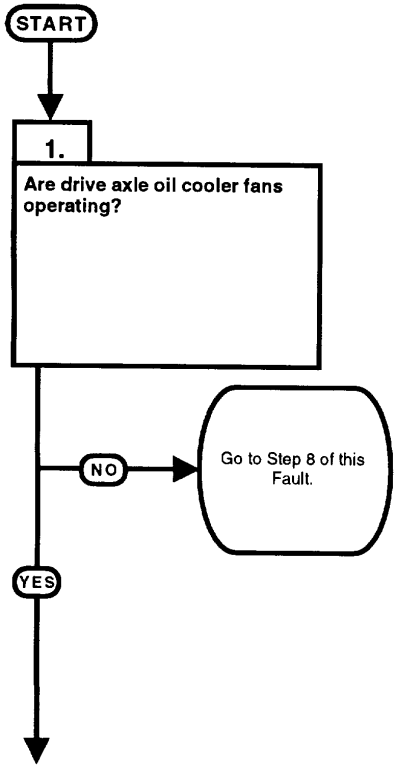

TEST OPTIONS
Visual inspection.
REASON FOR QUESTION
This question eliminates a possible problem or group of possible problems determining where troubleshooting continues.

www.truck-freeworkshop.com

VISUAL INSPECTION
(1) Start engine (TM 10-3930-669-10). (2) Observe drive axle oil cooler fans operation. (a) If drive axle oil cooler fans do not operate, perform Step (3) below and go to Step 8 of this Fault. (b) If drive axle oil cooler fans operate, perform Step (3) below and go to Step 2 of this Fault. (3) Shut down engine.

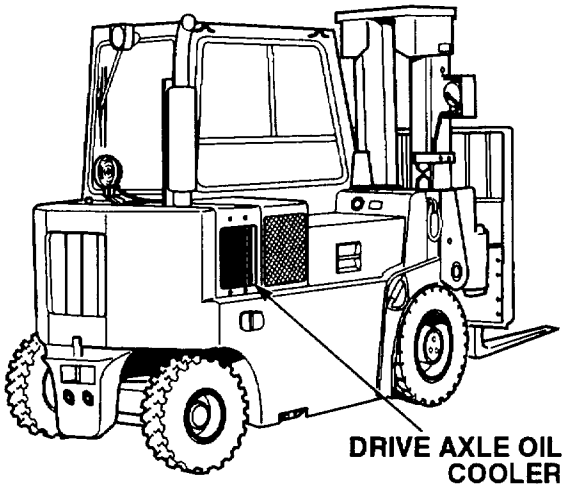

www.truck-freeworkshop.com

1. DRIVE AXLE OVERHEATING (CONT).

KNOWN INFO
Engine temperature 105°F or over. Glow plug indicator operates. Drive axle oil cooler ground wire OK. Drive axle oil cooler OK. Relay R7 ground wire OK. Wire 29 to relay R7 OK. Wire 73 OK. Relay R7 OK. Wire 29 to engine temperature switch OK. Engine temperature switch OK. Wire 71 OK.
POSSIBLE PROBLEMS
Parking brake dragging. Brake fluid faulty. Drive axle oil level incorrect. Master cylinder faulty. Drive axle faulty. Axle oil pump ground wire faulty. Axle oil pump faulty. Relay RB ground wire faulty. Wire 29 to relay R8 faulty. Wire 74 faulty. Relay R8 faulty. Wire 29 to drive axle temperature switch faulty. Drive axle oil temperature switch faulty. Wire 72 faulty.

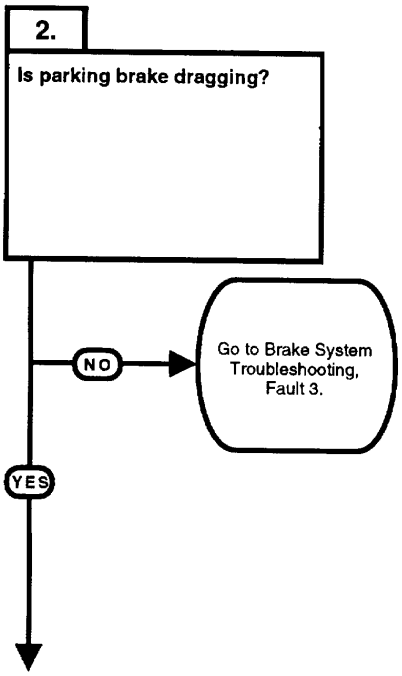

TEST OPTIONS
Visual inspection.
REASON FOR QUESTION
This question eliminates a possible problem or group of possible problems determining where troubleshooting continues.

www.truck-freeworkshop.com

VISUAL INSPECTION
(1) Start engine (TM 10-393069-10). (2) Depress throttle pedal and release parking brake slowly. (a) If parking brake is not fully disengaging, perform Step (3) below and go to Brake System Troubleshooting, Fault 3. (b) If parking brake fully disengages, parking brake is OK. (3) Shut down engine.

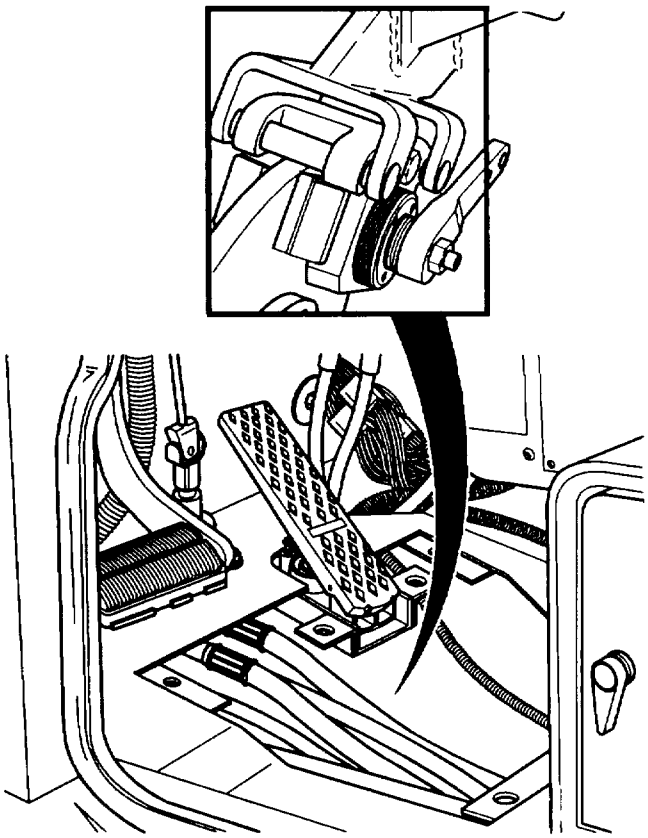

www.truck-freeworkshop.com

1. DRIVE AXLE OVERHEATING (CONT).

KNOWN INFO
Engine temperature 105°F or over. Glow plug indicator operates. Drive axle oil cooler ground wire OK. Drive axle oil cooler OK. Relay R7 ground wire OK. Wire 29 to relay R7 OK. Wire 73 OK. Relay R7 OK. Wire 29 to engine temperature switch OK. Engine temperature switch OK. Wire 71 OK. Parking brake OK.
POSSIBLE PROBLEMS
Brake fluid faulty. Drive axle oil level incorrect. Master cylinder faulty. Drive axle faulty. Axle oil pump ground wire faulty. Axle oil pump faulty. Relay R8 ground wire faulty. Wire 29 to relay R8 faulty. Wire 74 faulty. Relay R8 faulty. Wire 29 to drive axle temperature switch faulty. Drive axle oil temperature switch faulty. Wire 72 faulty.

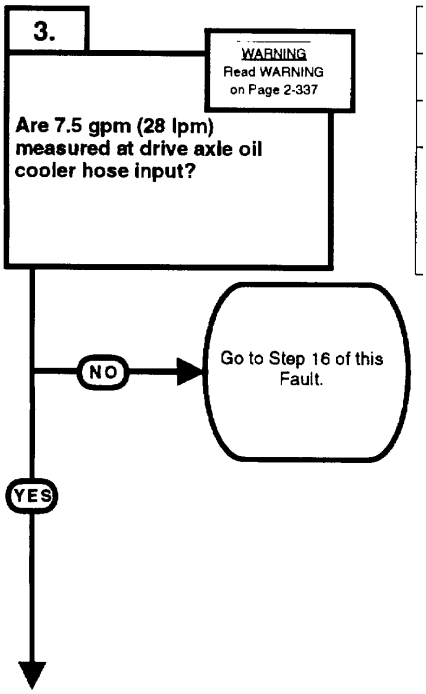

TEST OPTIONS
Flow test.
REASON FOR QUESTION
This question eliminates a possible problem or group of possible problems determining where troubleshooting continues.

www.truck-freeworkshop.com

WARNING

Drive axle and oil retains extreme heat. Use extreme caution when disconnecting hoses from drive axle oil cooler. Failure to do so will result in severe bums to personnel.

FLOW TEST

(1) Remove engine ventilation panel (Para 6-2).
(2) Disconnect input oil hose from oil cooler input (Para 10-2).
(3) Connect a hose between flow meter out port and oil cooler.
(4) Connect input hose to flow meter in port.
(5) Start engine (TM 10-3930-669-10).

(a) If there are not 7.5 gpm (28 gpm) present, perform Steps (6) and (7) below and go to Step 16 of this Fault.

(b) If there are 7.5 gpm (28 gpm) present, perform Steps (6) through (8) below and go to Step 4 of this Fault.

(6) Shut down engine.
(7) Remove flow meter and connec input hose to oil cooler.
(8) Install engine ventilation panel.

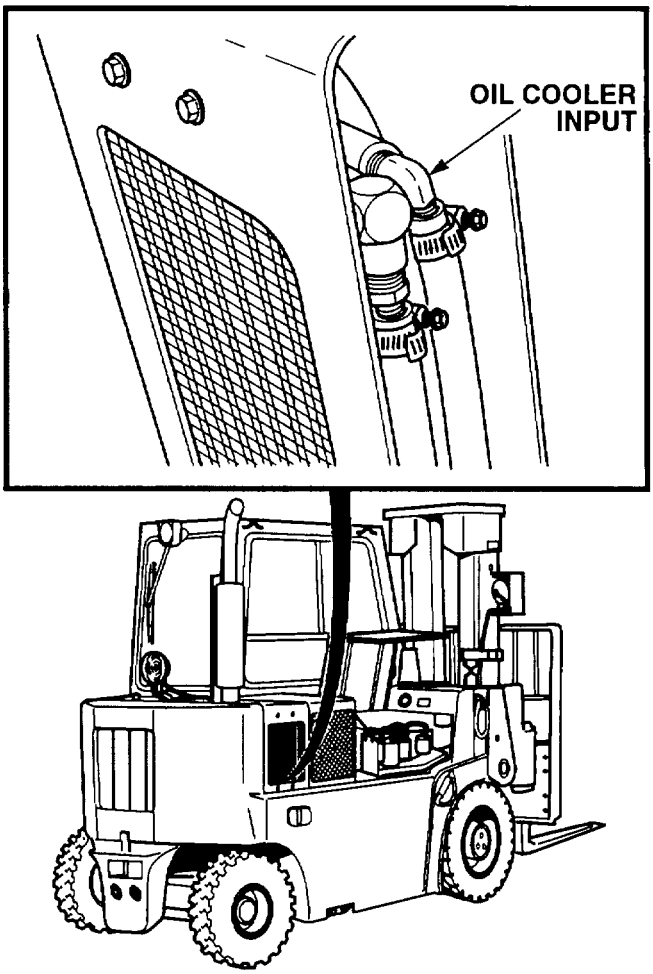

www.truck-freeworkshop.com

1. DRIVE AXLE OVERHEATING (CONT).

KNOWN INFO
Engine temperature 105°F or over. Glow plug indicator operates. Drive axle oil cooler ground wire OK. Drive axle oil cooler OK. Relay R7 ground wire OK. Wire 29 to relay R7 OK. Wire 73 OK. Relay R7 OK. Wire 29 to engine temperature switch OK. Engine temperature switch OK. Wire 71 OK. Parking brake OK. Axle oil pump ground wire OK. Axle oil pump OK. Relay R8 ground wire OK. Wire 29 to relay R8 OK. Wire 74 OK. Relay Re OK. Wire 29 to drive axle temperature switch OK. Drive axle oil temperature switch OK. Wire 72 OK.
POSSIBLE PROBLEMS
Brake fluid faulty. Drive axle oil level incorrect. Master cylinder faulty. Drive axle faulty.

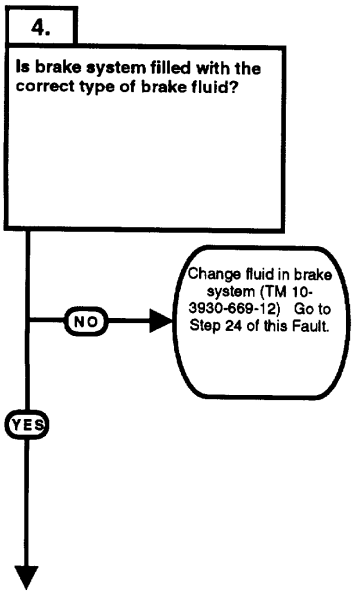

TEST OPTIONS
Visual inspection.
REASON FOR QUESTION
If brake fluid is incorrect, drive axle will overheat.

www.truck-freeworkshop.com

VISUAL INSPECTION
Inspect last maintenance DA form 2404 for forklift. (a) If type of brake fluid is incorrect, change fluid in drain brake system (TM 10-3930-669-12). (b) If type of brake fluid is correct, go to Step 5 of this Fault.

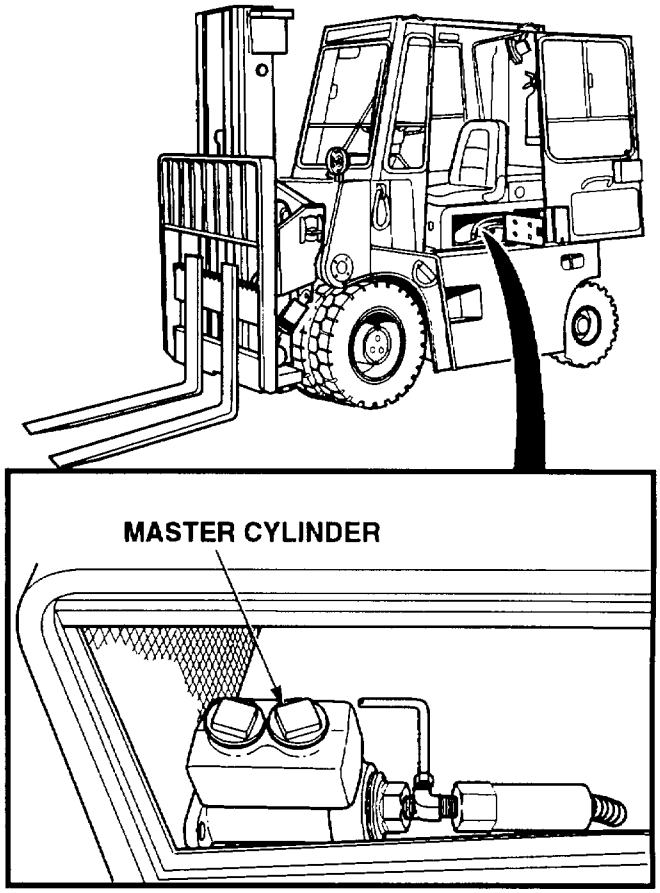

www.truck-freeworkshop.com

1. DRIVE AXLE OVERHEATING (CONT).

KNOWN INFO
Engine temperature 105°F or over. Glow plug indicator operates. Dnve axle oil cooler ground wire OK. Drive axle oil cooler OK. Relay R7 ground wire OK. Wire 29 to relay R7 OK. Wire 73 OK. Relay R7 OK. Wire 29 to engine temperature switch OK. Engine temperature switch OK. Wire 71 OK. Parking brake OK. Axle oil pump ground wire OK. Axle oil pump OK. Relay R8 ground wire OK. Wire 29 to relay R8 OK. Wire 74 OK. Relay R8 OK. Wire 29 to drive axle temperature switch OK. Drive axle oil temperature switch OK. Wire 72 OK. Brake fluid OK.
POSSIBLE PROBLEMS
Drive axle oil level incorrect. Master cylinder faulty. Drive axle faulty.

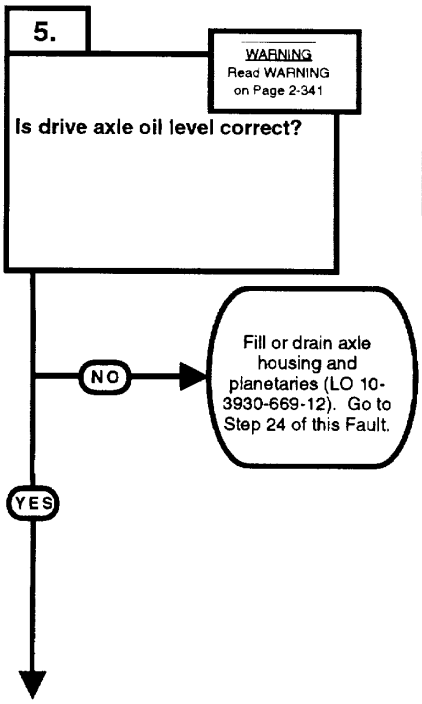

TEST OPTIONS
Drive axle oil check.
REASON FOR QUESTION
If drive axle oil level is incorrect, drive axle will overheat

www.truck-freeworkshop.com

WARNING

Drive axle and oil retains extreme heat. Do not check oil until drive axle has cooled. Failure to do so will result in severe bums to personnel.

DRIVE AXLE OIL LEVEL CHECK
(1) Remove check/fill plug (LO 10-3930-669-12). (2) Check oil level (LO 10-3930-669-12). (a) If oil level is incorrect, drain and refill axle housing and planetaries. (b) If oil level is correct, oil level is OK. (3) Install check fill plug.

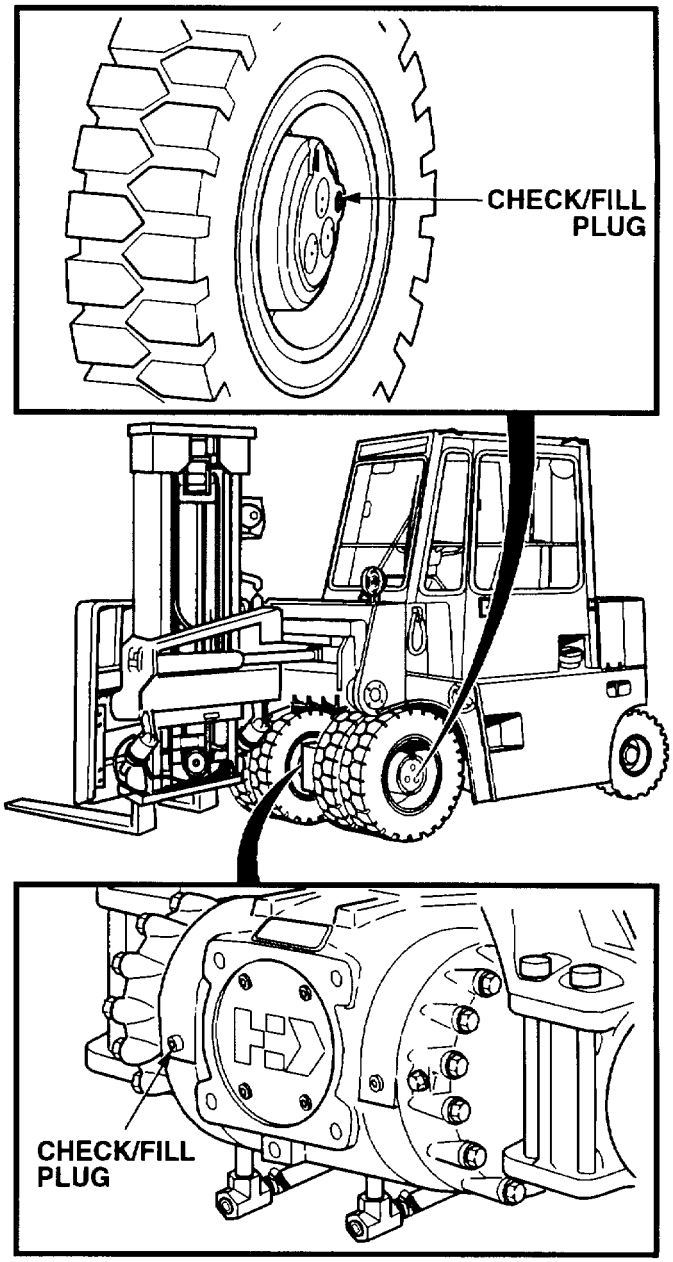

www.truck-freeworkshop.com

1. DRIVE AXLE OVERHEATING (CONT).

KNOWN INFO
Engine temperature 105°F or over. Glow plug indicator operates. Drive axle oil cooler ground wire OK. Drive axle oil cooler OK, Relay R7 ground wire OK. Wire 29 to relay R7 OK. Wire 73 OK. Relay R7 OK. Wire 29 to engine temperature switch OK. Engine temperature switch OK. Wire 71 OK. Parking brake OK. Axle oil pump ground wire OK. Axle oil pump OK. Relay R8 ground wire OK. Wire 29 to relay R8 OK. Wire 74 OK. Relay R8 OK. Wire 29 to drive axle temperature switch OK. Drive axle oil temperature switch OK. Wire 72 OK. Brake fluid OK. Drive axle oil level correct.
POSSIBLE PROBLEMS
Master cylinder faulty. Drive axle faulty.

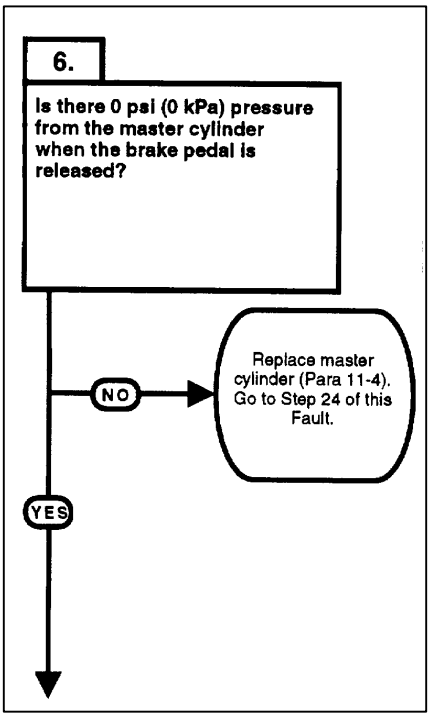

TEST OPTIONS
Pressure test. STE/ICE-R #50.
REASON FOR QUESTION
If 0 psi (0 kPa) pressure is not present, master cylinder is faulty.

www.truck-freeworkshop.com

PRESSURE TEST
(1) Disconnect brake line from master cylinder (Para 11-4).
(2) Connect 0 to 2,000 psi (0-13,790 kPa) pressure gauge to master cylinder.
(3) Apply and release brake pedal and observe gauge.
(a) If pressure does not drop to O psi (0O kPa), perform Step (4) below and replace master cylinder.
(b) If pressure drops to 0 psi (O kPa), master cylinder is OK.
(4) Remove 0 to 2,000 psi (0-13,790 kPa) pressure gauge.
(5) Connect brake line on master cylinder.

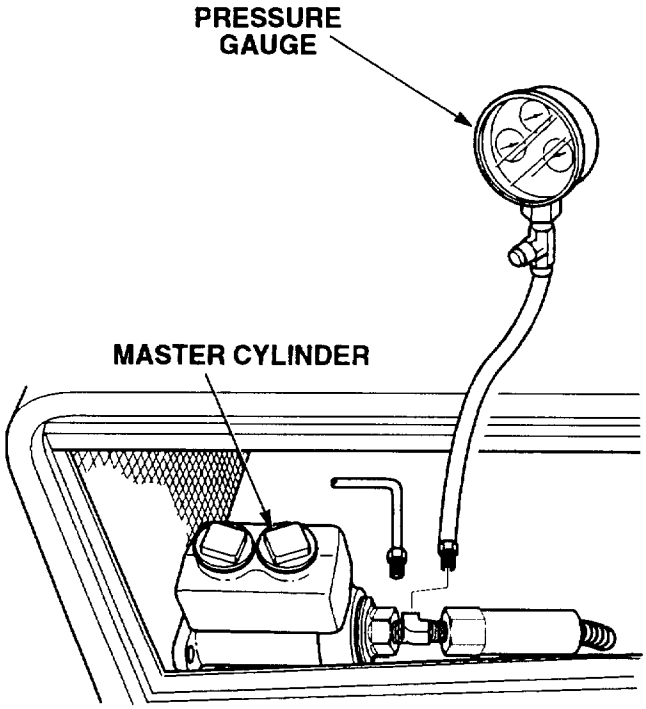

www.truck-freeworkshop.com

1. DRIVE AXLE OVERHEATING (CONT).

KNOWN INFO
Engine temperature 105°For over. Glow plug indicator operates. Drive axle oil cooler ground wire OK. Drive axle oil cooler OK. Relay R7 ground wire OK. Wire 29 to relay R7 OK. Wire 73 OK. Relay R7 OK. Wire 29 to engine temperature switch OK. Engine temperature switch OK. Wire 71 OK. Parking brake OK. Axle oil pump ground wire OK. Axle oil pump OK. Relay R8 ground wire OK. Wire 29 to relay R8 OK. Wire 74 OK. Relay R8 OK. Wire 29 to drive axle temperature switch OK. Drive axle oil temperature switch OK. Wire 72 OK. Brake fluid OK. Drive axle oil level correct. Master cylinder OK.
POSSIBLE PROBLEMS
Drive axle faulty.

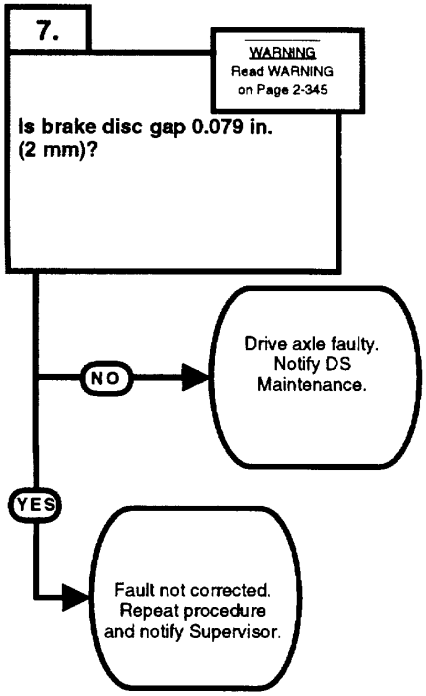

TEST OPTIONS	
Brake disc check.	
REASON FOR QUESTION	
1 0.079 in. (2 mm) is not measured, drive axle is faulty.	←

www.truck-freeworkshop.com

WARNING

Drive axle and oil retains extreme heat. Do not check oil until drive axle has cooled. Failure to do so will result in severe bums to personnel.

BRAKE DISC CHECK
(1) Remove check/fill plug (LO 10-3930-669-12). (2) Measure brake disc thickness. (a) If brake discs are not 0.079 in. (2 mm), drive axle is faulty. Perform Step (3) below and notify DS Maintenance. (b) If brake discs are 0.079 in. (2 mm) or less, drive axle is OK. (3) Install drive axle check/fill plug.

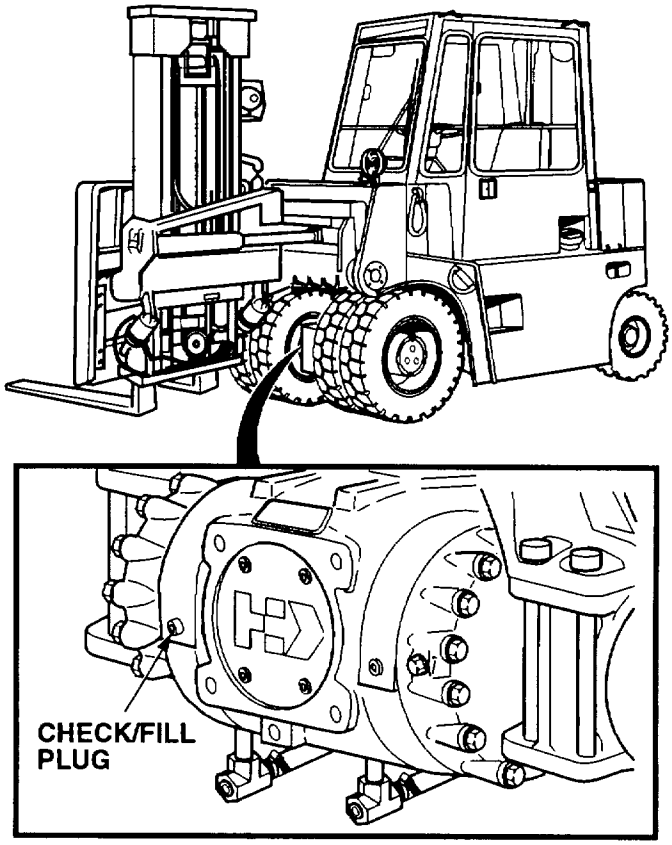

www.truck-freeworkshop.com

1. DRIVE AXLE OVERHEATING (CONT).

KNOWN INFO
Engine temperature 105°F or over. Glow plug indicator operates. Parking brake OK. Brake fluid OK. Drive axle oil level correct. Master cylinder OK. Drive axle OK. Axle oil pump ground wire OK. Axle oil pump OK. Relay R8 ground wire OK. Wire 29 to relay R8 OK. Wire 74 OK. Relay R8 OK. Wire 29 to drive axle temperature switch OK. Drive axle oil temperature switch OK. Wire 72 OK
POSSIBLE PROBLEMS
Drive axle oil cooler ground wire faulty. Drive axle oil cooler faulty. Relay R7 ground wire faulty. Wire 29 to relay R7 faulty. Wire 73 faulty. Relay R7 faulty. Wire 29 to engine temperature switch faulty. Engine temperature switch faulty. Wire 71 faulty.

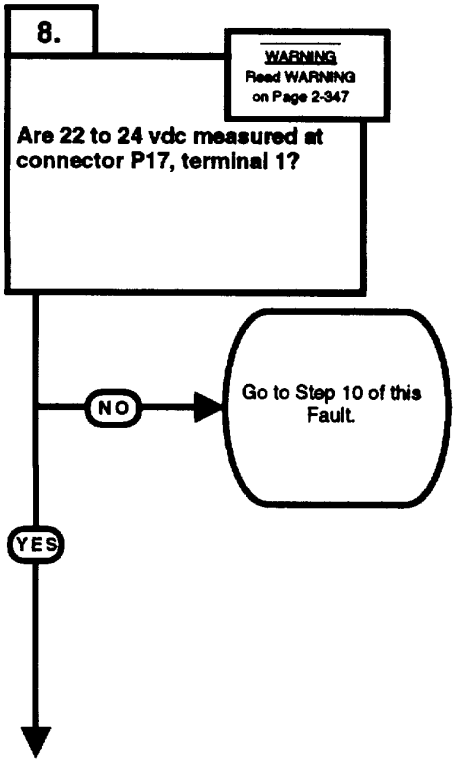

TEST OPTIONS
Voltage test. STEACE-R .89.
REASON FOR QUESTION
This question eliminates a possible problem or group of possible problems determining where troubleshooting continues.

www.truck-freeworkshop.com

WARNING

Remove all jewelry such as rings, dog tags, bracelets, etc. If jewelry contacts battery terminal, a direct short may result in instant heating of tools, damage to equipment, and injury or death to personnel.

VOLTAGE TEST
(1) Remove engine ventilation panel (Para 6-2). (2) Disconnect connector P17 from drive axle oil cooler fans connector. (3) Set multimeter select switch to VOLTS DC. (4) Connect positive (+) multimeter lead to connector P17, terminal 1. (5) Connect negative (-) multimeter lead to a known good ground. (6) Set MAIN POWER switch to ON position (TM 10-3930-669-10). (7) Set engine switch to ignition position (TM 10-3930-669-10). (a) If there are not 22 to 24 vdc present, perform Steps (8) and (9) below and go to Step 10 of this Fault. (b) If there are 22 to 24 vdc present, perform Steps (8) and (9) below and go to Step 9 of this Fault (8) Set engine switch to off position. (9) Set MAIN POWER switch to OFF position.

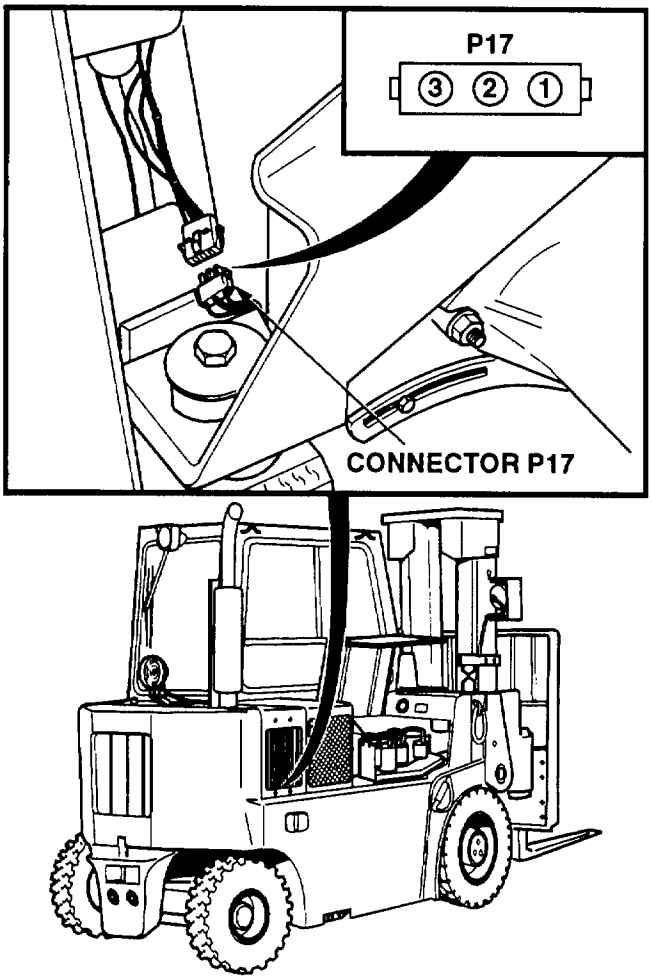

www.truck-freeworkshop.com

1. DRIVE AXLE OVERHEATING (CONT).

KNOWN INFO
Engine temperature 105°F or over. Glow plug indicator operates. Parking brake OK. Brake fluid OK. Drive axle oil level correct. Master cylinder OK. Drive axle OK. Axle oil pump ground wire OK. Axle oil pump OK. Relay R8 ground wire OK. Wire 29 to relay R8 OK. Wire 74 OK. Relay R8 OK. Wire 29 to drive axle temperature switch OK. Drive axle oil temperature switch OK. Wire 72 OK. Relay R7 ground wire OK. Wire 29 to relay R7 OK. Wire 73 OK. Relay R7 OK. Wire 29 to engine temperature switch OK. Engine temperature switch OK. Wire 71 OK.
POSSIBLE PROBLEMS
Drive axle oil cooler ground wire faulty. Drive axle oil cooler faulty.

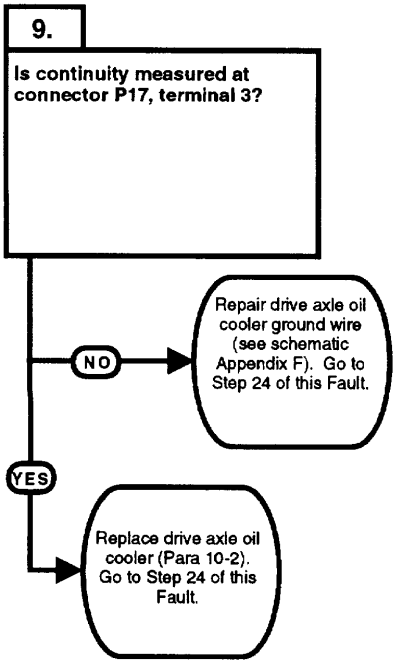

TEST OPTIONS
Continuity test. STE/ICE-R #91.
REASON FOR QUESTION
If continuity is not present, oil cooler ground wire is faulty. If ground wire is OK, drive axlde oil cooler is faulty.

www.truck-freeworkshop.com

CONTINUITY TEST
(1) Set multimeter select switch to OHMS. (2) Check continuity between connector P17, terminal 3 and a known good ground. (a) If there is no continuity, repair drive axle oil cooler ground wire (see schematic Appendix F). (b) If there is continuity, replace drive axle oil cooler (Para 10-2). (3) Connect connector P17 to drive axle oil cooler fans connector. (4) Install engine ventilation panel (Para 6-2). (5) Connect connector P17 on drive axle oil cooler fans connector.

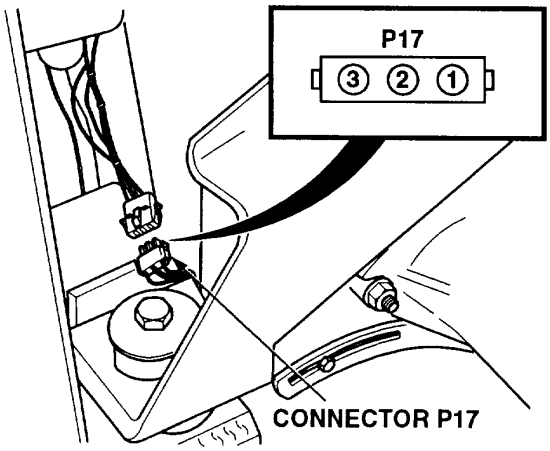

www.truck-freeworkshop.com

1. DRIVE AXLE OVERHEATING (CONT).

KNOWN INFO
Engine temperature 105°F or over. Glow plug indicator operates. Parking brake OK. Brake fluid OK. Drive axle oil level correct. Master cylinder OK. Drive axle OK. Axle oil pump ground wire OK. Axle oil pump OK. Relay R8 ground wire OK. Wire 29 to relay R8 OK. Wire 74 OK. Relay R8 OK. Wire 29 to drive axle temperature switch OK. Drive axle oil temperature switch OK. Wire 72 OK. Drive axle oil cooler ground wire OK. Drive axle oil cooler OK.
POSSIBLE PROBLEMS
Relay R7 ground wire faulty. Wire 29 to relay R7 faulty. Wire 73 faulty. Relay R7 faulty. Wire 29 to engine temperature switch faulty. Engine temperature switch faulty. Wire 71 faulty.

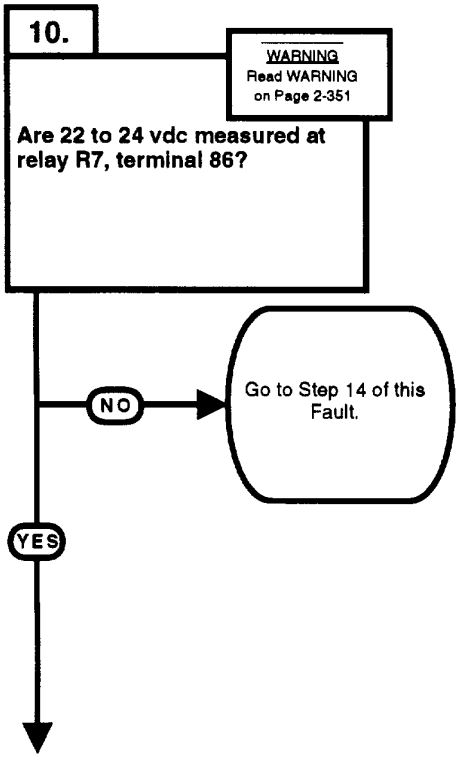

TEST OPTIONS
Voltage test. STE/ICE-R #89.
REASON FOR QUESTION
This question eliminates a possible problem or group of possible problems determining where troubleshooting continues

www.truck-freeworkshop.com

WARNING

Remove all jewelry such as rings, dog tags, bracelets, etc. If jewelry contacts battery terminal, a direct short may result in instant heating of tools, damage to equipment, and injury or death to personnel.

VOLTAGE TEST

(1) Remove relay R7 (Para7-33).
(2) Set multimeter select switch to VOLTS DC.
(3) Connect positive (+) multimeter lead to relay R7, terminal 86.
(4) Connect negative (-) multimeter lead to a known good ground.
(5) Set MAIN POWER switch to ON position (TM 10-3930-669-10).
(6) Set engine switch to ignition position (TM 10-3930-669-10).
  (a) If there are not 22 to 24 vdc present, perform Steps (7) through (10) below and go to Step 14 of this Fault.
  (b) If there are 22 to 24 vdc present, perform Steps (7) and (8) below and go to Step 11 of this Fault.
(7) Set engine switch to off position.
(8) Set MAIN POWER switch to OFF position.
(9) Install relay R7.
(10) Connect connector P70on drive axle oil cooler fans connector.

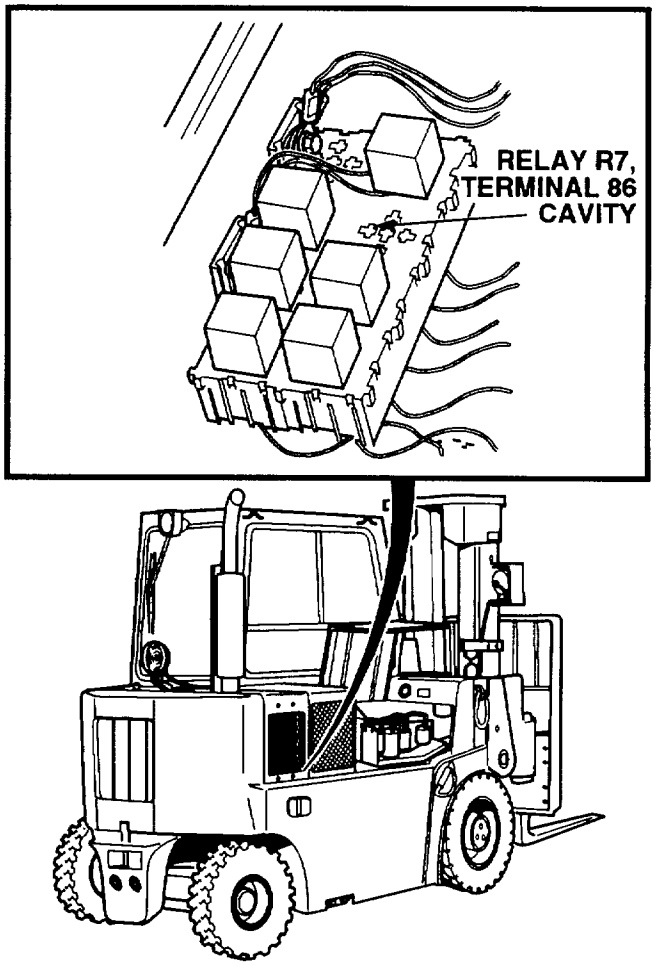

www.truck-freeworkshop.com

1. DRIVE AXLE OVERHEATING (CONT).

KNOWN INFO
Engine temperature 105°F or over. Glow plug indicator operates. Parking brake OK. Brake fluid OK. Drive axle oil level correct. Master cylinder OK. Drive axle OK. Axle oil pump ground wire OK. Axle oil pump OK. Relay R8 ground wire OK. wire 29 to relay R8 OK. Wire 74 OK. Relay RB OK. Wire 29 to drive axle temperature switch OK. Drive axle oil temperature switch OK. Wire 72 OK. Drive axle oil cooler ground wire OK. Drive axle oil cooler OK. Wire 29 to engine temperature switch OK. Engine temperature switch OK. Wire 71 OK.
POSSIBLE PROBLEMS
Relay R7 ground wire faulty. Wire 29 to relay R7 faulty. Wire 73 faulty. Relay R7 faulty.

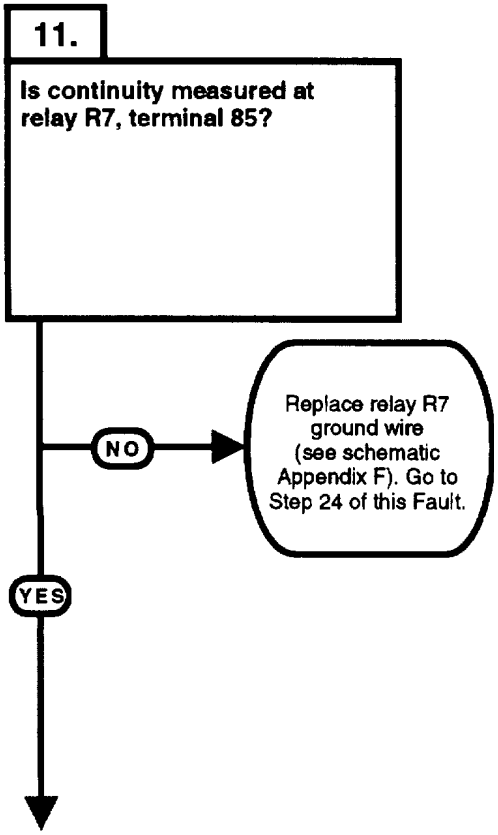

TEST OPTIONS
Continuity test. STE/CE-R #91.
REASON FOR QUESTION
If continuity is not present, relay R7 ground wire is faulty.

www.truck-freeworkshop.com

CONTINUITY TEST
(1) Set multimeter select switch to OHMS. (2) Check continuity between relay R7, terminal 85 and a known good ground. (a) If there is no continuity, replace relay R7 ground wire (see schematic Appendix F). (b) If there is continuity, relay R7 ground wire is OK.

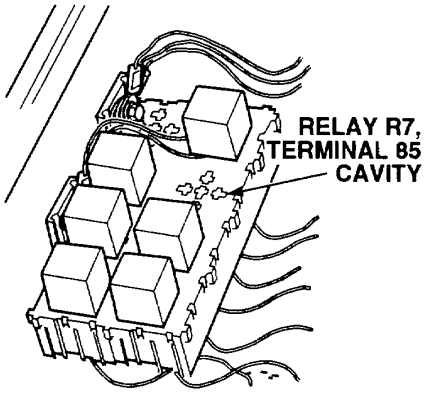

www.truck-freeworkshop.com

1. DRIVE AXLE OVERHEATING (CONT).

KNOWN INFO
Engine temperature 105° or over. Glow plug indicator operates. Parking brake OK. Brake fluid OK. Drive axle oil level correct. Master cylinder OK. Drive axle OK. Axle oil pump ground wire OK. Axle oil pump OK. Relay R8 ground wire OK. Wire 29 to relay R8 OK. Wire 74 OK. Relay R8 OK. Wire 29 to drive axle temperature switch OK. Drive axle oil temperature switch OK. Wire 72 OK. Drive axle oil cooler ground wire OK. Drive axle oil cooler OK. Wire 29 to engine temperature switch OK. Engine temperature switch OK. Wire 71 OK. Relay R7 ground wire OK.
POSSIBLE PROBLEMS
Wire 29 to relay R7 faulty. Wire 73 faulty. Relay R7 faulty.

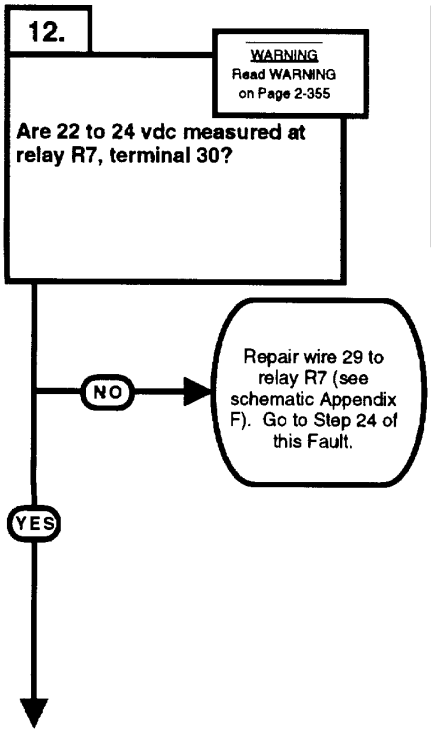

www.truck-freeworkshop.com

WARNING

Remove all jewelry such as rings, dog tags, bracelets, etc. If jewelry contacts battery terminal, a direct short may result in instant heating of tools, damage to equipment, and injury or death to personnel.

VOLTAGE TEST
(1) Set multimeter select switch to VOLTS DC. (2) Connect positive (+) multimeter lead to relay R7, terminal 30. (3) Connect negative (-) multimeter lead to a known good ground. (4) Set MAIN POWER switch to ON position (TM 10-3930-669-10). (5) Set engine switch to ignition position (TM 10-3930-669-10). (a) If there are not 22 to 24 vdc present, perform Steps (6) and (7) below and repair wire 29 to relay R7 (see schematic Appendix F). (b) If there are 22 to 24 vdc present, wire 29 to relay R7 is OK. (6) Set engine switch to OFF position. (7) Set MAIN POWER switch to OFF position.

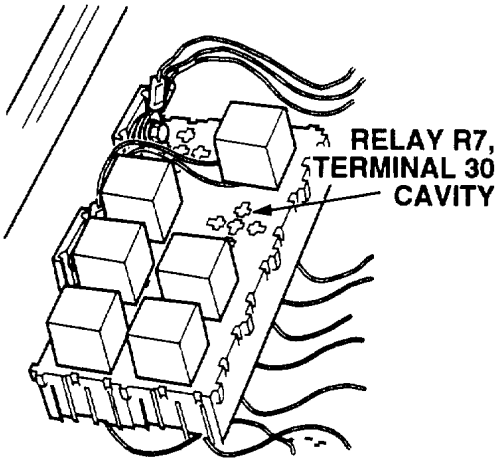

www.truck-freeworkshop.com

1. DRIVE AXLE OVERHEATING (CONT).

KNOWN INFO
Engine temperature 105°F or over. Glow plug indicator operates. Parking brake OK. Brake fluid OK. Drive axle oil level correct. Master cylinder OK. Drive axle OK. Axle oil pump ground wire OK. Axle oil pump OK. Relay R8 ground wire OK. Wire 29 to relay R8 OK. Wire 74 OK. Relay R8 OK. Wire 29 to drive axle temperature switch OK. Drive axle oil temperature switch OK. Wire 72 OK. Drive axle oil cooler ground wire OK. Wire 29 to engine temperature switch OK. Engine temperature switch OK. Wire 71 OK. Relay R7 ground wire OK. Wire 29 to relay R7 OK.
POSSIBLE PROBLEMS
Wire 73 faulty. Relay R7 faulty.

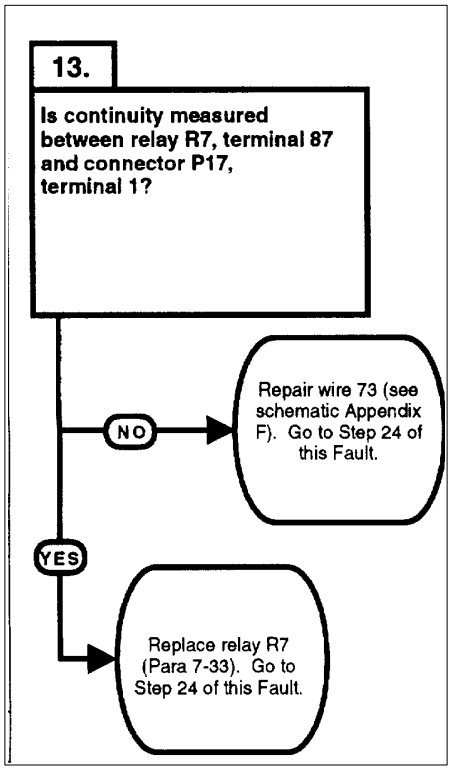

TEST OPTIONS
Continuity test. STEICE-R # 1.
REASON FOR QUESTION
If continuity is not present, wire 73 is faulty. If wire 73 is OK, relay R7 is faulty.

www.truck-freeworkshop.com

CONTINUITY TEST
(1) Set multimeter select switch to OHMS. (2) Check continuity between relay R7, terminal 87 and connector P17, terminal 1. (a) If there is no continuity, repair wire 73 (see schematic Appendix F). (b) If there is continuity, replace relay R7. (3) Install relay R7 (Para 7-33). (4) Connect connector P17 on drive axle oil cooler fans connector.

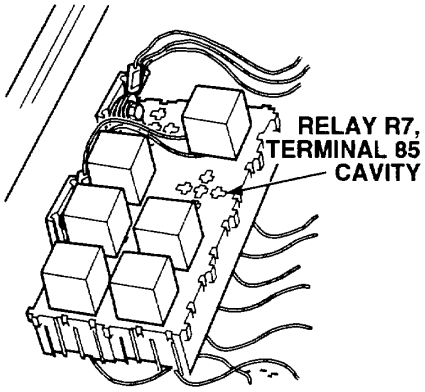

www.truck-freeworkshop.com

1. DRIVE AXLE OVERHEATING (CONT).

KNOWN INFO
Engine temperature 105°F or over. Glow plug indicator operates. Parking brake OK. Brake fluid OK. Drive axle oil level correct. Master cylinder OK. Drive axle OK. Axle oil pump ground wire OK. Axle oil pump OK. Relay R8 ground wire OK. Wire 29 to relay R8 OK. Wire 74 OK. Relay R8 OK. Wire 29 to drive axle temperature switch OK. Drive axle oil temperature switch OK. Wire 72 OK. Drive axle oil cooler ground wire OK. Drive axle oil cooler OK. Relay R7 ground wire OK. Wire 29 to relay R7 OK. Wire 73 OK. Relay R7 OK.
POSSIBLE PROBLEMS
Wire 29 to engine temperature switch faulty. Engine temperature switch faulty. Wire 71 faulty.

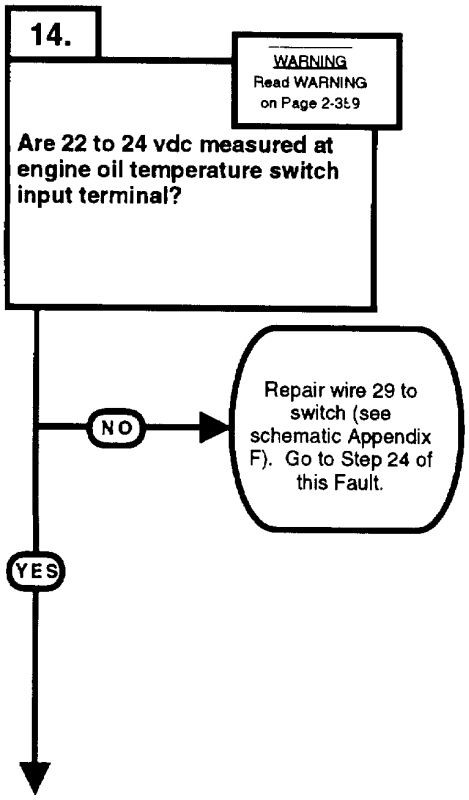

TEST OPTIONS
Voltage test. STE/ICE-R #89.
REASON FOR QUESTION
If 22 to 24 vdc are not present, wire 29 to engine temperature switch is faulty.

www.truck-freeworkshop.com

WARNING

Remove all jewelry such as rings, dog tags, bracelets, etc. If jewelry contacts battery terminal, a direct short may result in instant heating of tools, damage to equipment, and injury or death to personnel.

VOLTAGE TEST
(1) Open night-hand engine access cover (TM 10-3930-669-10). (2) Set multimeter select switch to VOLTS DC. (3) Connect positive (+) multimeter lead to engine temperature switch input terminal. (4) Connect negative (-) multimeter lead to a known good ground. (5) Turn Main power switch to the ON position. (a) If there are not 22 to 24 vdc present, perform Step (6) below and repair wire 29 to switch (see schematic Appendix F). (b) If there are 22 to 24 vdc present, wire 29 to switch is OK. (6) Turn Main power switch to the OFF position.

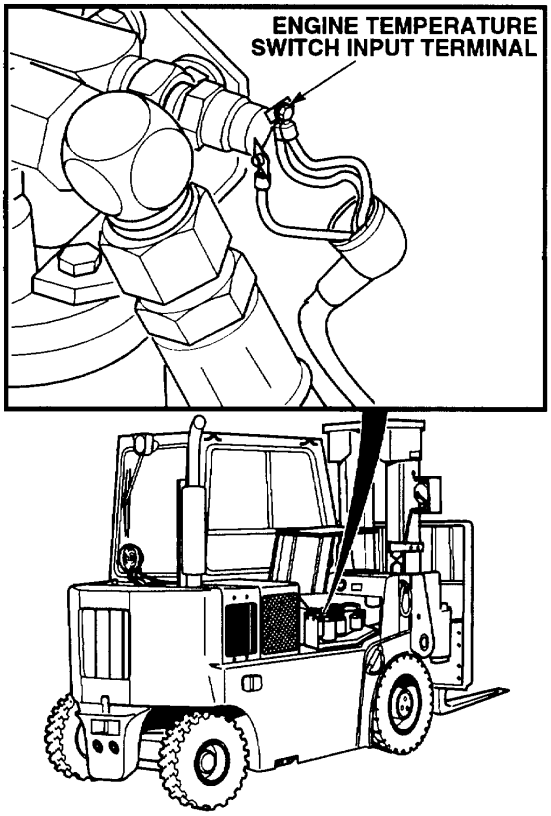

www.truck-freeworkshop.com

1. DRIVE AXLE OVERHEATING (CONT).

KNOWN INFO
Engine temperature 105°F or over. Glow plug indicator operates. Parking brake OK. Brake fluid OK. Drive axle oil level correct. Master cylinder OK. Drive axle OK. Axle oil pump ground wire OK. Axle oil pump OK. Relay R8 ground wire OK. Wire 29 to relay R8 OK. Wire 74 OK. Relay R8 OK. Wire 29 to drive axle temperature switch OK. Drive axle oil temperature switch OK. Wire 72 OK. Drive axle oil cooler ground wire OK, Drive axle oil cooler OK. Relay R7 ground wire OK. Wire 29 to relay R7 OK. Wire 73 OK. Relay R7 OK. Wire 29 to engine temperature switch OK.
POSSIBLE PROBLEMS
Engine temperature switch faulty. Wire 71 faulty.

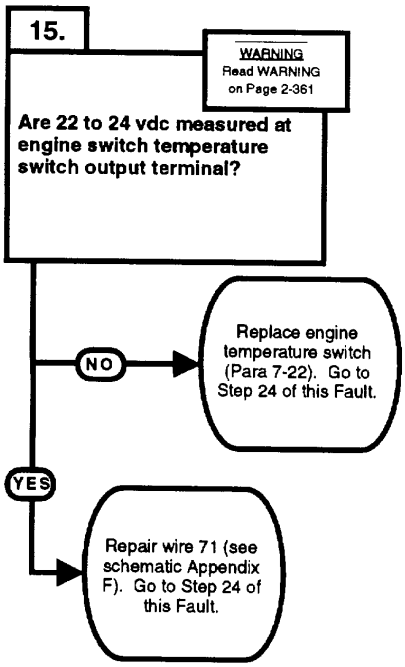

TEST OPTIONS
Voltage test. STEACE-R #89.
REASON FOR QUESTION
If 22 to 24 vdc are not present, engine temperature switch is faulty. If temperature switch is OK, wire 71 is faulty.

www.truck-freeworkshop.com

WARNING

Remove all jewelry such as rings, dog tags, bracelets, etc. if jewelry contacts battery terminal, a direct short may result in instant heating of tools, damage to equipment, and injury or death to personnel.

VOLTAGE TEST
(1) Set multimeter select switch to VOLTS DC. (2) Connect positive (+) multimeter lead to engine switch temperature switch output terminal. (3) Connect negative (-) multimeter lead to a known good ground. (4) Turn Main power switch to the ON position (TM 10-3930-669-10). (a) If there are not 22 to 24 vdc present, perform Step (5) below and replace engine temperature switch (Para 7-22). (b) If there are 22 to 24 vdc present, perform Step (5) below and repair wire 71 (see schematic Appendix F). (5) Turn Main power switch to the OFF position. (6) Close right-hand engine access cover (TM 10-3930-669-10).

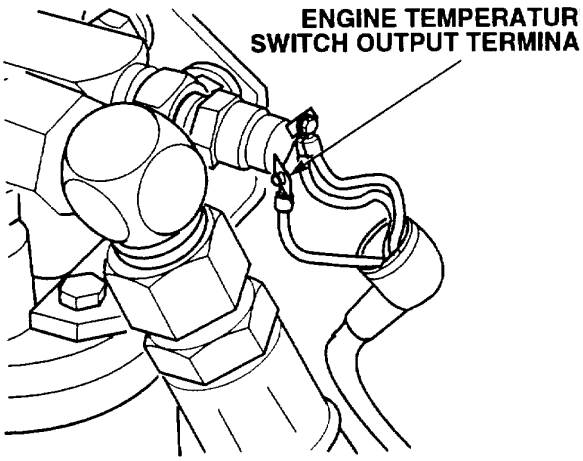

www.truck-freeworkshop.com

1. DRIVE AXLE OVERHEATING (CONT).

KNOWN INFO
Engine temperature 105°F or over. Glow plug indicator operates. Parking brake OK. Brake fluid OK. Drive axle oil level correct. Master cylinder OK. Drive axle OK. Drive axle oil cooler ground wire OK. Drive axle oil cooler OK. Relay R7 ground wire OK. Wire 29 to relay R7 OK. Wire 73 OK. Relay R7 OK. Wire 29 to engine temperature switch OK. Engine temperature switch OK. Wire 71 OK.
POSSIBLE PROBLEMS
Axle oil pump ground wire faulty. Axle oil pump faulty. Relay R8 ground wire faulty. Wire 29 to relay R8 faulty. Wire 74 faulty. Relay R8 faulty. Wire 29 to drive axle temperature switch faulty. Drive axle oil temperature switch faulty. Wire 72 faulty.

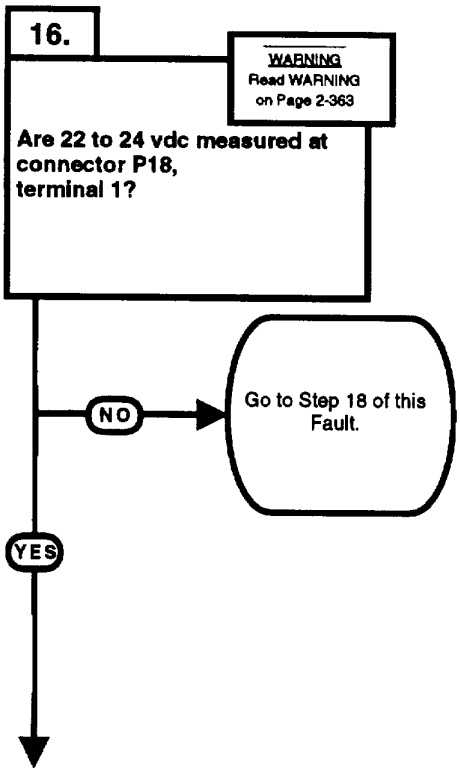

TEST OPTIONS
Voltage test. STE/ICE-R #89.
REASON FOR QUESTION
This question eliminates a possible problem or group of possible problems determining where troubleshooting continues.

www.truck-freeworkshop.com

WARNING

Remove all jewelry such as rings, dog tags, bracelets, etc. If jewelry contacts battery terminal, a direct short may result in instant heating of tools, damage to equipment, and injury or death to personnel.

VOLTAGE TEST
(1) Remove oil filter tray (Para 4-13). Do not disconnect hoses or wires. (2) Disconnect connector P18 from axle oil pump connector. (3) Set multimeter select switch to VOLTS DC. (4) Connect positive (+) multimeter lead to connector P18, terminal 1. (5) Connect negative (-) multimeter lead to a known good ground. (6) Turn Main power switch to the ON position (TM 10-3930-669-10). (a) If there are not 22 to 24 vdc present, perform Step (7) below and go to Step 18 of this Fault. (b) If there are 22 to 24 vdc present, perform Step (7) below and go to Step 17 of this Fault. (7) Turn Main power switch to the OFF position.

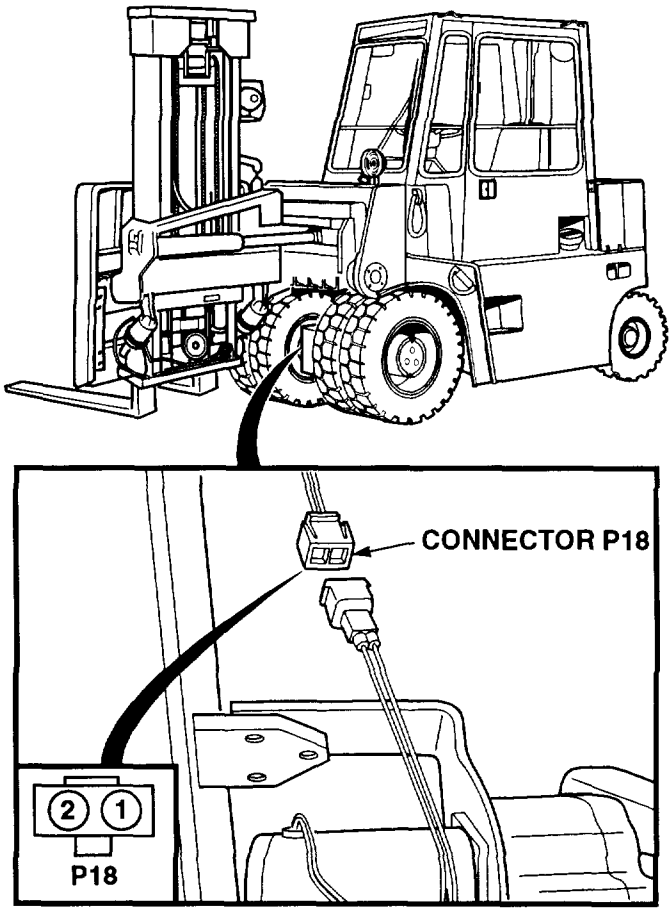

www.truck-freeworkshop.com

1. DRIVE AXLE OVERHEATING (CONT).

KNOWN INFO
Engine temperature 105°F or over. Glow plug indicator operates. Parking brake OK. Brake fluid OK. Drive axle oil level correct. Master cylinder OK. Drive axle OK. Drive axle oil cooler ground wire OK. Drive axle oil cooler OK. Relay R7 ground wire OK. Wire 29 to relay R7 OK. Wire 73 OK. Relay R7 OK. Wire 29 to engine temperature switch OK. Engine temperature switch OK. Wire 71 OK. Relay R8 ground wire OK. Wire 29 to relay R8 OK. Wire 74 OK. Relay R8 OK. Wire 29 to drive axle temperature switch OK. Drive axle oil temperature switch OK. Wire 72 OK.
POSSIBLE PROBLEMS
Axle oil pump ground wire faulty. Axle oil pump faulty.

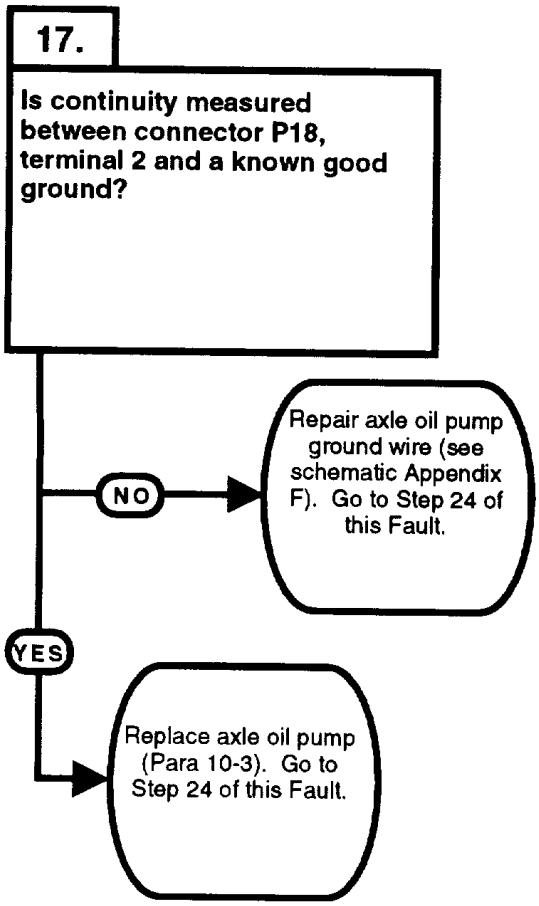

TEST OPTIONS
Continuity test. STE/ICE-R #91.
REASON FOR QUESTION
If continuity is not present, wire is faulty. If wire is OK, is faulty.

www.truck-freeworkshop.com

CONTINUITY TEST

(1) Set multimeter select switch to OHMS.

(2) Check continuity between connector P18, terminal 2 and a known good ground.

  (a) If there is no continuity, repair axle oil pump ground wire (see schematic Appendix F).

  (b) If there is continuity, replace axle oil pump (Para 10-3).

(3) Connect connector P18 on axle oil pump connector.

(4) Install oil filter tray (Para 4-13).

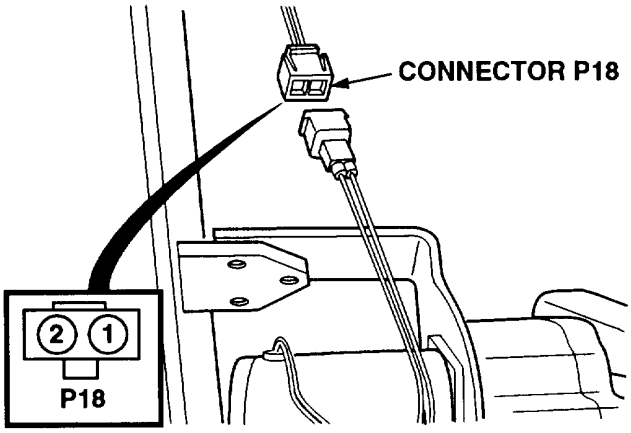

www.truck-freeworkshop.com

1. DRIVE AXLE OVERHEATING (CONT).

KNOWN INFO

Engine temperature 105°F or over.
Glow plug indicator operates.
Parking brake OK.
Brake fluid OK.
Drive axle oil level correct.
Master cylinder OK.
Drive axle OK.
Drive axle oil cooler ground wire OK.
Drive axle oil cooler OK.
Relay R7 ground wire OK.
Wire 29 to relay R7 OK.
Wire 73 OK.
Relay R7 OK.
Wire 29 to engine temperature switch OK.
Engine temperature switch OK.
Wire 71 OK.
Axle oil pump ground wire OK.
Axle oil pump OK.

POSSIBLE PROBLEMS

Relay R8 ground wire faulty.
Wire 29 to relay R8 faulty.
Wire 74 faulty.
Relay R8 faulty.
Wire 29 to drive axle temperature switch faulty.
Drive axle oil temperature switch faulty.
Wire 72 faulty.

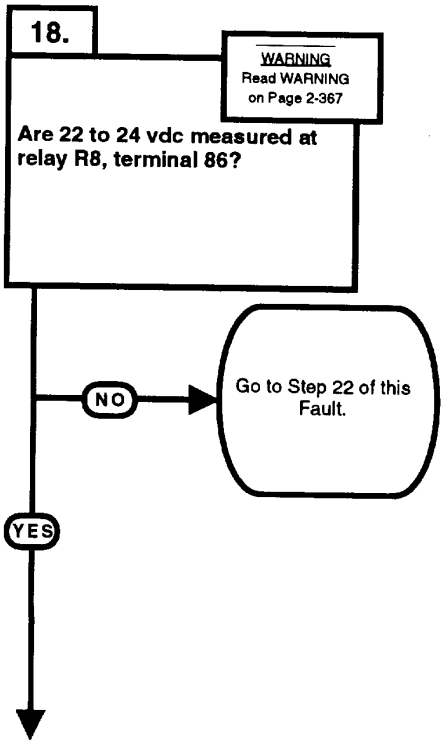

TEST OPTIONS

Voltage test.
STE/ICE-R #89.

REASON FOR QUESTION

This question eliminates a possible problem or group of possible problems determining where troubleshooting continues.

www.truck-freeworkshop.com

WARNING

Remove all jewelry such as rings, dog tags, bracelets, etc. If jewelry contacts battery terminal, a direct short may result in instant heating of tools, damage to equipment, and injury or death to personnel.

VOLTAGE TEST

(1) Remove relay R8 (Para 7-33).
(2) Set multimeter select switch to VOLTS DC.
(3) Connect positive (+) multimeter lead to relay R8, terminal 86.
(4) Connect negative (-) multimeter lead to a known good ground.
(5) Set MAIN POWER switch to ON position (TM 10-3930-669-10).
(6) Set engine switch to ignition position (TM 10-3930-669-10).
  (a) If there are not 22 to 24 vdc present, perform Steps (7) through (10) below and go to Step 22 of this Fault
  (b) If there are 22 to 24 vdc present, perform Steps (7) and (8) below and go to Step 19 of this Fault
(7) Set engine switch to off position.
(8) Set MAIN POWER switch to OFF position.
(9) Connect connector P18 on axle oil pump connector.
(10) Install relay R8 (Para 7-33).

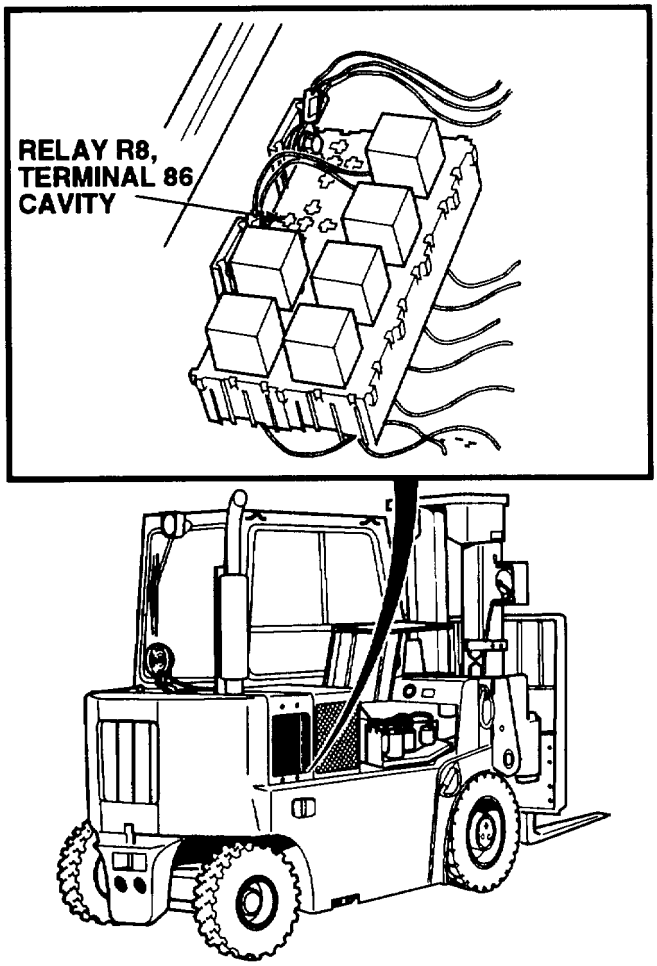

www.truck-freeworkshop.com

1. DRIVE AXLE OVERHEATING (CONT).

KNOWN INFO
Engine temperature 105°F or over. Glow plug indicator operates. Parking brake OK. Brake fluid OK. Drive axle oil level correct. Master cylinder OK. Drive axle OK. Drive axle oil cooler ground wire OK. Drive axle oil cooler OK. Relay R7 ground wire OK. Wire 29 to relay R7 OK. Wire 73 OK. Relay R7 OK. Wire 29 to engine temperature switch OK. Engine temperature switch OK. Wire 71 OK. Axle oil pump ground wire OK. Axle oil pump OK. Wire 29 to drive axle temperature switch OK. Drive axle oil temperature switch OK. Wire 72 OK.
POSSIBLE PROBLEMS
Relay R8 ground wire faulty. Wire 29 to relay R8 faulty. Wire 74 faulty. Relay R8 faulty.

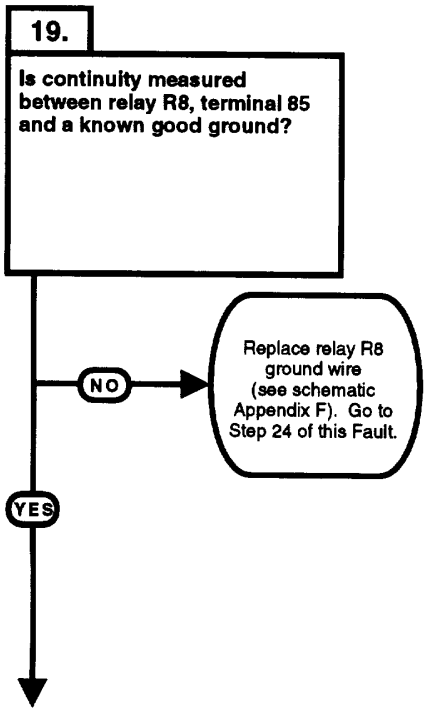

TEST OPTIONS
Continuity test. STE/ICE-R #91.
REASON FOR QUESTION
If continuity is not present, relay R8 ground wire is faulty.

www.truck-freeworkshop.com

CONTINUITY TEST
(1) Set multimeter select switch to OHMS. (2) Check continuity between relay R8, terminal 85 and a known good ground. (a) If there is no continuity, replace relay R8 ground wire (see schematic Appendix F). (b) If there is continuity, relay R8 ground wire is OK.

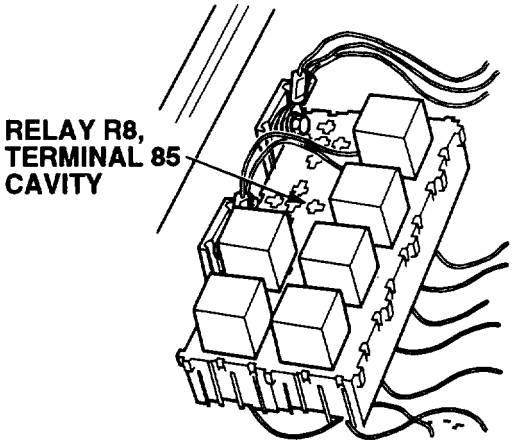

www.truck-freeworkshop.com

1. DRIVE AXLE OVERHEATING (CONT).

KNOWN INFO
Engine temperature 105°F or over. Glow plug indicator operates. Parking brake OK. Brake fluid OK. Drive axle oil level correct. Master cylinder OK. Drive axle OK. Drive axle oil cooler ground wire OK. Drive axle oil cooler OK. Relay R7 ground wire OK. Wire 29 to relay R7 OK. Wire 73 OK. Relay R7 OK. Wire 29 to engine temperature switch OK. Engine temperature switch OK. Wire 71 OK. Axle oil pump ground wire OK. Axle oil pump OK. Wire 29 to drive axle temperature switch OK. Drive axle oil temperature switch OK. Wire 72 OK. Relay R8 ground wire OK.
POSSIBLE PROBLEMS
Wire 29 to relay R8 faulty. Wire 74 faulty. Relay R8 faulty.

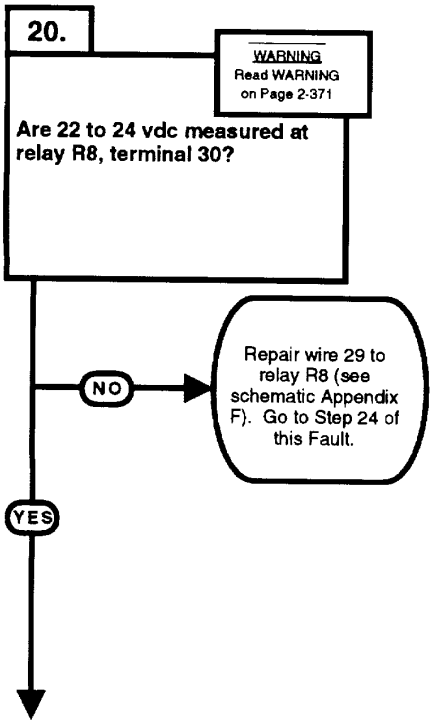

TEST OPTIONS
Voltage test. STE/ICE-R #89.
REASON FOR QUESTION
If 22 to 24 vdc are not present, wire 29 to relay R8 is faulty.

www.truck-freeworkshop.com

WARNING

Remove all jewelry such as rings, dog tags, bracelets, etc. If jewelry contacts battery terminal, a direct short may result in instant heating of tools, damage to equipment, and injury or death to personnel.

VOLTAGE TEST
(1) Set multimeter select switch to VOLTS DC. (2) Connect positive (+) multimeter lead to relay R8, terminal 30. (3) Connect negative (-) multimeter lead to a known good ground. (4) Set MAIN POWER switch to ON position (TM 10-3930-669-10). (5) Set engine switch to ignition position (TM 10-3930-669-10). (a) If there are not 22 to 24 vdc present, perform Steps (6) and (7) below and repair wire 29 to relay R8 (see schematic Appendix F). (b) If there are 22 to 24 vdc present, wire 29 to relay R8 is OK. (6) Set engine switch to off position. (7) Set MAIN POWER switch to OFF position.

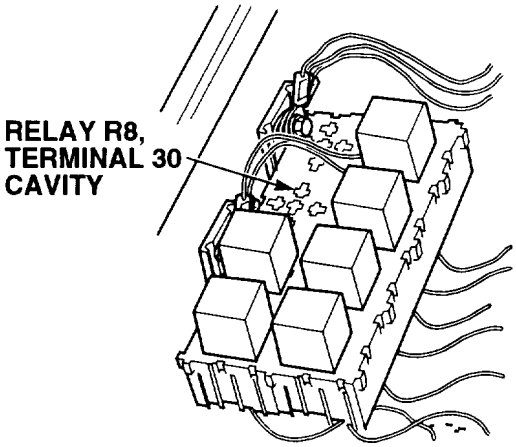

www.truck-freeworkshop.com

1. DRIVE AXLE OVERHEATING (CONT).

KNOWN INFO
Engine temperature 105°F or over. Glow plug indicator operates. Parking brake OK. Brake fluid OK. Drive axle oil level correct. Master cylinder OK. Drive axle OK. Drive axle oil cooler ground wire OK. Drive axle oil cooler OK. Relay R7 ground wire OK. Wire 29 to relay R7 OK. Wire 73 OK. Relay R7 OK. Wire 29 to engine temperature switch OK. Engine temperature switch OK. Wire 71 OK. Axle oil pump ground wire OK. Axle oil pump OK. Wire 29 to drive axle temperature switch OK. Drive axle oil temperature switch OK. Wire 72 OK. Relay R8 ground wire OK. Wire 29 to relay R8 OK.
POSSIBLE PROBLEMS
Wire 74 faulty. Relay R8 faulty.

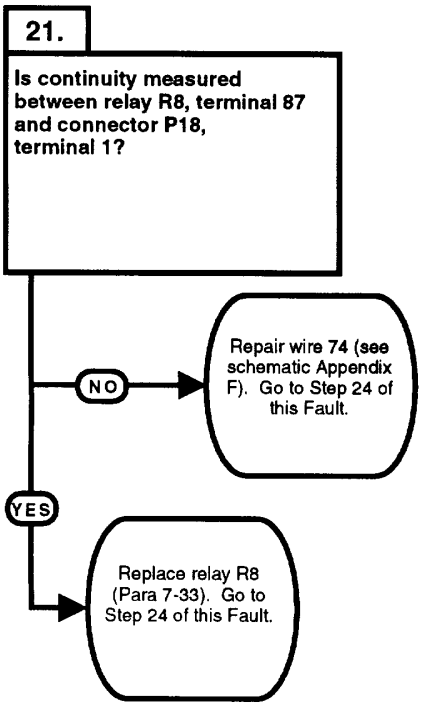

TEST OPTIONS
Continuity test. STE/ICE-R #91.
REASON FOR QUESTION
If continuity is not present, wire 74 is faulty. If wire 74 is OK, relay R8 is faulty.

www.truck-freeworkshop.com
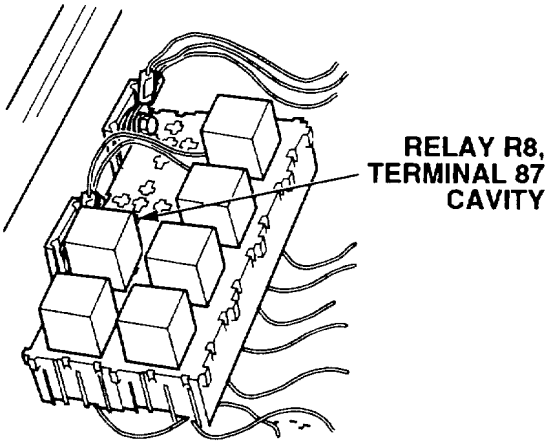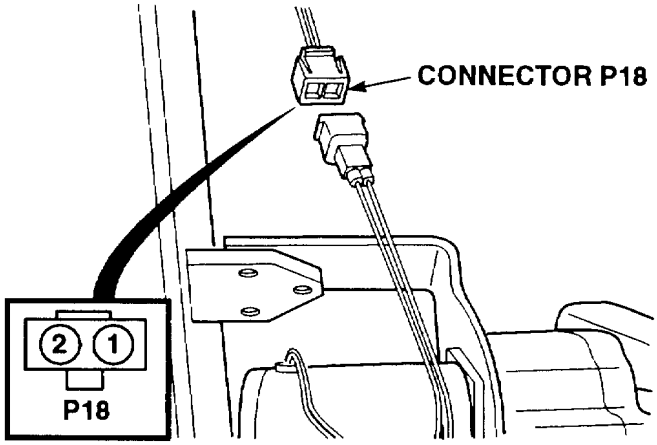
CONTINUITY TEST
(1) Set multimeter select switch to OHMS. (2) Check continuity between relay R8, terminal 87 and connector P18, terminal 1. (a) If there is no continuity, repair wire 74 (see schematic Appendix F). (b) If there is continuity, replace relay RB. (3) Install relay R8 (Para 7-33). (4) Connect connector P18 on axle oil pump. (5) Install oil filter tray (Para 4-13).