https://truckmanualshub.com/

STANDARD EQUIPMENT

ENGINE

SK140SRD

- ISUZU AR-4JJ1XASK-02 Tier IV diesel engine with turbocharger and intercooler
- Two 12 volt 80Ah batteries
- 24V-5kW starter
- 50-amp alternator

SK210D

- HINO J05EUM-KSSC Tier IV diesel engine with turbocharger and intercooler
- Two 12 Volt 96Ah batteries
- 24V-5kW starter
- 60-amp alternator

Common Features

- Automatic engine deceleration
- Proportionate engine accelerate
- Removable clean out screen
- Double element air cleaner
- Automatic low engine oil pressure shut down
- Side by side oil, hydraulic and engine radiators

HYDRAULIC

- Hydraulic oil cooler
- Hydraulic oil filter condition indicator

SWING SYSTEM & TRAVEL SYSTEM

- Swing rebound prevention system
- Two-speed travel with automatic shift down
- Sealed & lubricated track links
- Grease-type track adjusters
- Automatic swing brake

MIRRORS & LIGHTS

- Three rear view mirrors and rearview camera
- Three front working lights (1 on uppercarriage, 2 on cab)
- Two attachment front working lights
- Swing flashers with 2 rear work lights

CAB & CONTROL

- Two control levers, pilot-operated
- Electric horn and travel alarm
- Cab light (interior)
- Coat hook
- Large cup holder
- Detachable two-piece floor mat
- 7-way adjustable suspension seat with head rest
- Retractable seatbelt
- Cab entry and engine access handrails
- Heater and defroster
- Intermittent windshield wiper with double-spray washer

CAB & CONTROL

- Sky light
- Front guard(wire mesh guard)
- Top guard level II (Meets ISO10262)
- Tinted safety glass and shatterproof film
- Pull-type front window and removable lower front window
- Easy-to-read multi-display monitor
- Automatic air conditioner
- Emergency escape hammer
- Radio, AM/FM Stereo with speakers
- 12V power source
- AUX, USB, Bluetooth
- Control pattern changer (2-way)
- Cab entry step

- Boom & arm holding valve
- Cab interference prevention system
- 0.35"(9 mm) thick swivel guard
- 0.24"(6 mm) thick upper frame under cover guards
- Reinforced travel motor covers
- Rotation and N&B auxiliary circuits and piping
- Boom cylinder guards
- Work boot tray
- Public address system
- KOMEXS

OPTIONAL EQUIPMENT

- Flat shoes
- Air suspension seat with armrests
- Additional right camera + additional monitor

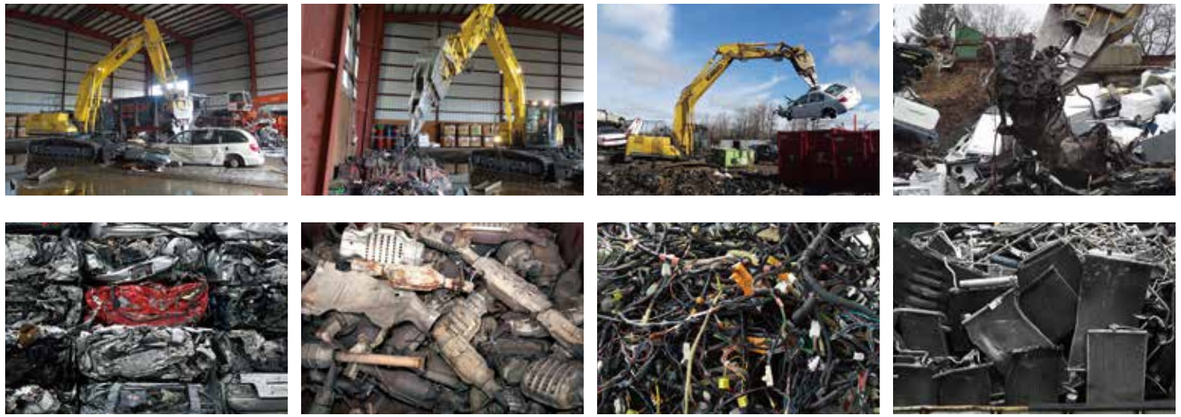

Note: Standard and optional equipment may vary. Consult your KOBELCO dealer for specifics.

Note: This document may contain attachments and optional equipment that are not available in your area. It may also contain photographs of machines with specifications that differ from those sold in your area.
Please contact your nearest KOBELCO dealer for items you require.
Due to our policy of continuous product improvement, all designs and specifications are subject to change without advance notice.
Copyright **KOBELCO CONSTRUCTION MACHINERY CO., LTD.** No part of this document may be reproduced in any manner without prior written permission from KOBELCO.

KOBELCO CONSTRUCTION MACHINERY U.S.A. INC.
22350 Merchants Way, Katy, Texas 77449
http://www.kobelco-usa.com/

Inquiries To:

Multi-dismantling machine-NA-101-1806M&T

KOBELCO

DRIVEN BY PASSION

Multi-dismantling machine

SK140SRD SK210D

SK140SRD-5 SK210D-10

US EPA Tier IV Final

EU (NRMM) Stage IV

Japanese Regulations

https://heavymachinehub.com/

All Parts in End-of-life Vehicle are Reusable

Kobelco multi-dismantling machines help evolve car dismantling into a more promising and profitable business.

The automobile market in North America is massive and a staggering number of automobiles are discarded every year. In the last 20 years, over 13 million vehicles have been scrapped in the US alone making it the largest market for ELVs (end of life vehicles) in the world. Kobelco believes this has resulted in a missed opportunity to significantly grow this industry through a much more thorough recovery of the valuable materials in each vehicle. Kobelco SK140SRD and SK210D Multi-Dismantling machines are the perfect tool to recover these materials. These machines enable a simple and efficient work processes, which increases the number of vehicles that can be processed while also increasing the recover rate of precious metals. This is done through years of development of a machine that is purpose build and made specifically to perform sorting and dismantling functions at a high level. We propose this business strategy because we understand the value of end-of-life vehicles as resources and we have built machines and helped to promote this business since we build our first dismantler in 1979.

https://truckmanualshub.com/

Machine that Embody 40 Years of Our Experience in Dismantling Sites.

Machine designed and built specifically for car dismantling

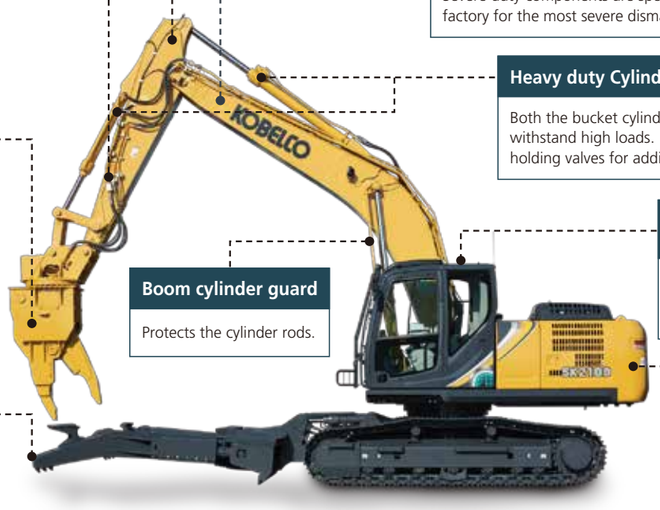

Piping for the rotating nibbler

Heavy duty open/close and rotation piping for optimum nibbler tool performance.

Front attachments

Kobelco's nibbler tool provides maximum pinching, crushing and cutting power to allow the operator to easily and efficiently remove parts and sort valuable materials.

Clamp arm

The clamp arm moves vertically (up and down) and closes horizontally (side to side) to hold car better than top only style arms.

Reinforced Boom and Arm

Severe duty components are specifically designed and installed at the factory for the most severe dismantling applications.

Heavy duty Cylinders(with load holding valves)

Both the bucket cylinder and arm cylinder are reinforced to withstand high loads. Boom and arm cylinders have holding valves for additional safety.

Boom cylinder guard

Protects the cylinder rods.

Cab for the multi-dismantling machine

Specialized cab with front and top window guarding and safety glass for operator protection.

Counterweight

Special heavy counterweight is used for increased stability.

Multi-dismantling nibbler

Specialized nibbler for more detailed separating processes

The Kobelco nibblers are designed to provide maximum gripping, holding, twisting, breaking and pulling power. Their heavy duty design is made to hold up to severe duty dismantling, yet they are nimble enough to perform delicate and precise operations. The tool for the SK210D has 2 rotation motors to provide additional rotation force for increased productivity to the customer.

SK140SRD

Multi-dismantling nibbler KHE750PR-2

SK210D

Multi-dismantling nibbler KVE720PR

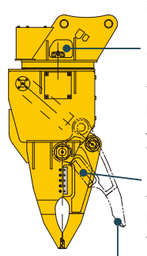

Heavy duty design and construction of the body, tine, pivot group allows for maximum production and ease of maintenance.

360 degree rotating tool
Powerful rotation torque enables effective twisting and stripping motions via the proportionate control button on the left joystick.Movements are quick, controlled and precise.

Shear/cutter blades
The powerful shear/cutter blades at the back of the jar allow the operator to cut vehicle frames and chassis or downsize other materials.

Powerful crushing force
The interlocking replaceable teeth are made to grip and hold material securely, yet nimble enough to grab and pick up a single wire.

Open/close type clamp arms

Clamp arms specially designed by Kobelco.

The Kobelco designed clamp arms are made to hold a vehicle in multiple positions to provide maximum access for complete dismantling. The clamp arms include additional tools to make dismantling process quicker and more efficient.

Center cover
Made to protect and shed material off the clamp arms.

Anchor
Designed to bend long objects easily.

Teeth
Used to separate aluminum heads and transmissions from engine blocks.

Grips
The bowl grips are used to hold the car for dismantling then used to hold smaller items like the engine and dash for additional parts removal.

Puller
Used to remove instrument clusters and circuit boards and to clean wire and harnesses.

Overall flow of the car recycling process and the benefits of using multi-dismantling machines

Dismantling process flow chart

How the Car Dismantling machine works

1. Collecting fuel, fluids and chlorofluorocarbon gas
Remove fluids such as fuel, anti freeze, oils and chloroflurocarbon gas

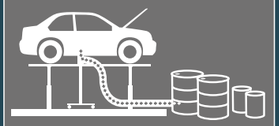

2. Parts collection
Efficiently collect reusable parts

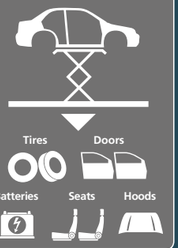

3. Car dismantling process

After pre-processing, the car is sorted into raw components such as ferrous, non-ferrous and plastics

29 Cu Copper 63.546 | 13 Al Aluminium 26.982 | Harnesses | Engine | Radiator

3. Processes after removing parts
Once thoroughly cleaned, the parts become good quality recycled parts

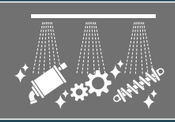

4. Volume reduction processes
After treating, the scrap cars are cut up and crushed or pressed into materials that meet industry needs

Blocks of material can then be distributed to smelting plants for recycling

The Evolution of the car dismantling industry by Kobelco

Four times* the vehicle dismantling capability compared with hand dismantling.
*In one day (Kobelco test figures)

15 vehicles > One operative working by hand.

60 vehicles > One operative in a Kobelco Car Dismantling machine.

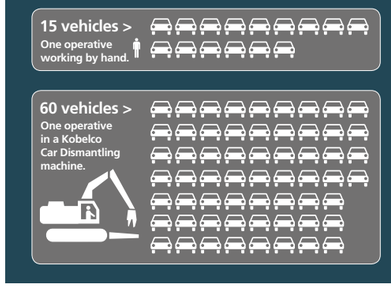

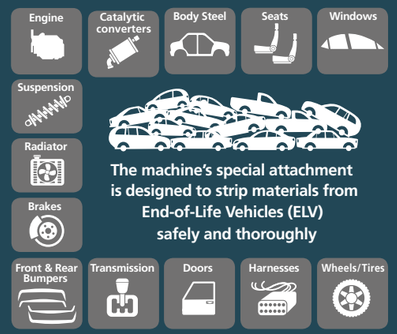

The machine's special attachment is designed to strip materials from End-of-Life Vehicles (ELV) safely and thoroughly

Improved recovery rate of rare earth metals

26 Fe Iron 55.933 | 13 Al Aluminium 26.982 | 29 Cu Copper 63.546 | 78 Pt Platinum 195.08 | 46 Pd Palladium 106.42

Separation of these valuable materials is quicker and easier and can be performed with one Kobelco machine.

Environmentally Friendly Engine

NOx emissions cut:

New TIER IV Final compliance engine

The SK140SRD is fitted with Diesel Oxidation Catalyst (DOC) and Selective Catalytic Reduction (SCR) for emission control. The larger SK210D utilizes SCR and a Diesel Particulate Filter (DPF) for emission control. Both machines have large capacity DEF/AdBlue* tanks to extend fill intervals.

■ NOx reduction rate
(Compared to previous models)
About 88% decrease

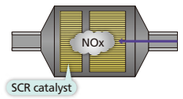

*AdBlue® is a registered trade mark of the Verband der Automobilindustrie e. V. (VDA).

PM emissions cut:

Particulate matter (PM) is mostly soot resulting from incomplete combustion; Improved combustion efficiency reduces PM emissions.

Common rail system
High-pressure injection atomizes the fuel, and more precise injection improves combustion efficiency. This also contributes to better fuel economy.

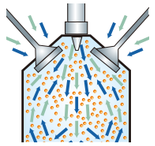

Common rail system

At high temperatures, nitrogen and oxygen combine to produce nitrous oxides (NOx). Reducing the amount of oxygen and lowering the combustion temperature results in much less NOx.

EGR cooler
While ensuring sufficient oxygen for combustion, cooled emission gases are mixed with the intake air and recirculated into the engine. This reduces oxygen content and lowers combustion temperature.

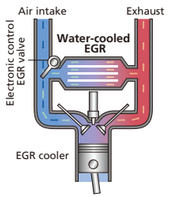

https://truckmanualshub.com/

Smooth and Efficient Work Process Realized by Our Advanced Technologies and Thorough Care

Cab interference prevention system

The cab interference prevention system is provided as standard equipment to prevent the nibbler from contacting the cab during operation. Precise detection of the position and orientation of the nibbler minimizes the interference warning range to enable a larger effective working area. Since the nibbler tool is restricted from coming into contact with the cab, the operator is able to work more productively and with more focus on the dismantling process.

System operation

Audible and visual warnings appear when nibbler tool approaches the cab, but the machine stops it before it any contact to the cab is made.

How it works

The system calculates the boom angle, arm angle, idler link motion angle to come up with the position and direction of the front attachment to control its motion.

Boom angle sensor

Arm angle sensor

Bucket angle sensor

Comfortable operating environment

The large roomy cab has a wide open view thru the large front and side windows. Posts are small and minimized to further reduce blind spots and distractions. The cab is also air tight, with inside and outside A/C filters and rides, rides on suspension springs. All to keep operator comfortable and productive.

Intuitive operation

Machine operation feels natural and is simplified by making the clamp arms operate by foot pedals and the nibbler by the joystick mounted rocker switches. Levers, pedals and switches are easily operable without requiring excessive force to prevent fatigue during extended periods of use.

Suspension seat absorbs vibration

Reclining seat has a wide recline angle

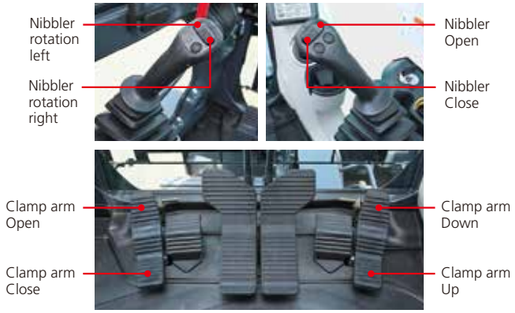

Color Multi-display

Color Multi-display

Brilliant colors differentiate multiple graphics on cab LCD. Graphics indicate fuel consumption, maintenance intervals and more.

1. Analog-style gauges provide an intuitive reading of fuel level and engine temperature
2. Green indicates ECO mode selected or efficient operation in other modes
3. PM accumulation (left-SK210D only) / DEF level (right)
4. Fuel consumption/Rear-view camera
5. Operating mode switch
6. Monitor display switch

Cab interference prevention alarm

Fuel consumption

Maintenance

Energy-efficient System

ECO-mode: engineered for economy

Kobelco's ECO-mode maximizes the operating efficiency of the engine and other components to achieve much greater fuel efficiency. Just press a button to choose the operation mode best suited to the task at hand and the working conditions.

■ Optimal operation with three modes

- **H** — **H-mode • • • Maximum power for maximum productivity on your toughest jobs**
- **S** — **S-mode • • • Ideal balance of productivity and fuel efficiency for a range of urban engineering projects**
- **E** — **ECO-mode • • • Minimum fuel consumption for utility projects and other work that demands precision**

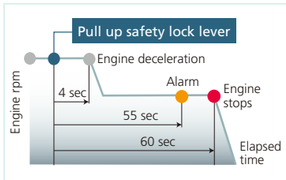

AIS (Auto Idle Stop)

If the boarding/disembarking lever is left up, the engine will stop at a predetermined time automatically. This eliminates wasteful idling during standby, saving fuel and reducing CO2 emissions as well.

Safety equipment for protecting workers and allowing them to be free of stress and anxiety.

Front guard(wire mesh guard)

Front windows are protected by a wire mesh guard to prevent damage and provide additional safety for the operator.

Top guard level Ⅱ(Meets ISO10262)

The standard grid type cab ceiling guard protects the operator against objects falling on the cab roof.

Front window

Front and right side window have tear and penetration-resistance film to hold glass fragments together.

Rear view camera

Standard machine safety feature to protect the operator, personnel around the machine, and surrounding equipment.

Cab entry step

The larger step makes it easy for the operator to climb into and out of the cab.

Lower frame step

An additional step is installed on the side of the crawler frame. (SK210D only)

Public address system

Operator is able to alert ground workers without taking their hands off the machine controls.

Travel alarm

The alarm cautions workers in the area that the machine is traveling.

Cab with two LED lights

Highly bright long-life LED lights are equipped as standard working lights.

Boom with two lights

Working lights are equipped as standard on both sides of the boom.

Swing flasher/rear work lights

The swing flashers help prevent collisions and accidents while the upper body is turning. Rear work lights are standard.

Heavy Counterweight

The additional weight ensures substantial stability, making it easier to grab and raise heavy objects such as end-of-life vehicles.

https://truckmanualshub.com/

Our Long-Life Philosophy of Maintaining Long-term Performance

Body frame designed for improved strength

*Green areas represent components of the specialized design.

These machines have reinforced frames and specially designed swing areas due to the heavier counterweight and clamp arms. These reinforcements are made when the machine is manufactured to ensure durability and longevity. Since Kobelco has been building and refining the dismantler machines for over 40 years, they know what stresses the machine can go through. By addressing these areas from the start, it avoids the breakdowns and repairs that are seen on competitive lighter duty units.

Frame is reinforced from the factory to support the heavier counterweight.

Upper frame

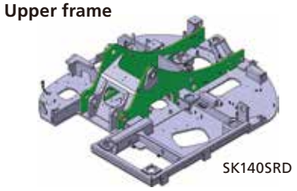

SK140SRD

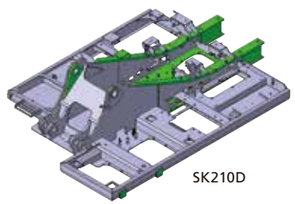

SK210D

Lower frame

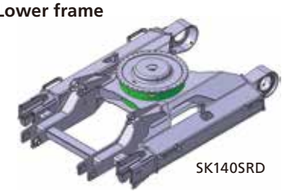

SK140SRD

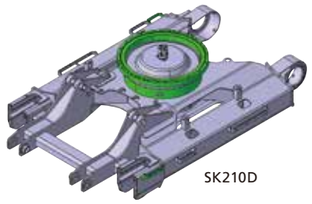

SK210D

Factory designed and installed rugged and durable attachments

*Green areas represent components of the specialized design.

Thick steel plates have been added to the HD arm right, left, and front sides of the boom to resist twisting. The sides and back of arms are reinforced with thick plates, and there is a rock guard added the end of the arm to further reinforce and protect it from damage.

High-strength multi-dismantling attachment

HD arm

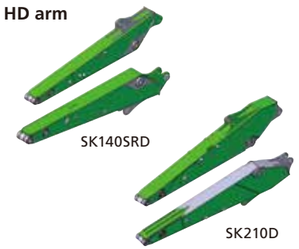

SK140SRD

SK210D

HD boom

SK140SRD

SK210D

The factory, purpose built structures, maximize durability, while reducing maintenance costs.

Boom cylinder guards

Guided reinforced boom cylinder guard with box-type structure

Dismantling arm cylinder

Heavy duty arm cylinder made specifically for dismantling application.

Dismantling bucket cylinder

Use of a dedicated cylinder with heavy duty components.

Boom & arm holding valves

Standard - to prevent boom or arm from falling if hose is damaged.

Upper frame under cover guards

Upper frame belly guards. Reinforced guarding to protect the engine, hydraulic system and operator station.

Swivel guard

Heavy duty guarding for hydraulic components in the swivel / swing area.

Dust-proof fuel tank cap

The fuel cap is lined with rubber to prevent dust from contaminating the fuel tank.

Work boot tray

The operator is able to put dirty work boots in outside tray to keep cab cleaner.

Unique engine cooling system -iNDr-
<Only on SK140SRD>

iNDr absorbs sound energy to minimize noise by making a path of air, which cools down the engine. The SK140SRD is equipped with a selective catalytic reduction (SCR) unit, which required a new design with two offset ducts on top. This allows ample space to absorb engine noise.

iNDr Integrated Noise & Dust Reduction Cooling System

Eliminating dust maintains cooling system performance

The high-density 30-mesh* filters dust in the intake air. This prevents clogging of the cooling system and the air cleaner, which maintains peak performance. The waveform filter allows air through the tops of the waves while collecting dust at the bottom, ensuring a smooth airflow.

Blocking out dust

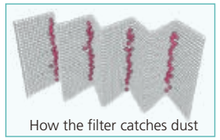

How the filter catches dust

* "30-mesh" means that there are 30 holes formed by horizontal and vertical wires in every square inch of filter.

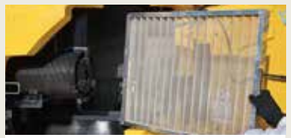

iNDr fillter

The cooling system includes an iNDr dust filter to make daily cleaning system cleaning an easy process. (SK140SRD only)

Removable screens for easy cleaning

Easily removable screens to prevent material from clogging the cooling system. (SK210D only)

Hydraulic oil filter

Glass filtration material with outstanding cleaning ability and durability is used.

Maintenance spece

The upper space provides a comfortable platform for maintenance inside the engine hood.

Total Support for Machines with Network Speed and Accuracy

KOMEXS is a satellite-based system for receiving machine information. Manage your machines anywhere in the world using the Internet. Location, workload and diagnostic data aid business operations.

Direct Access to Operational Status

Location Data
Accurate location data can be obtained even from sites where communications are difficult.

Operating Hours
A comparison of operating times of machines at multiple locations shows which locations are busier and more profitable.
Operating hours on site can be accurately recorded, for running time calculations needed for rental machines, etc.

Fuel Consumption Data
Data on fuel consumption and idling times can be used to indicate improvements in fuel consumption.

Graph of Work Content
The graph shows how working hours are divided among different operating categories, including digging, idling, traveling, and optional operations (N&B).

Maintenance Data and Warning Alerts

Machine Maintenance Data
Provides maintenance status of separate machines operating at multiple sites. Maintenance data is also relayed to KOBELCO service personnel, for more efficient planning of periodic servicing.

Security System

Engine Start Alarm
Sends a notification if the engine is started outside of pre-defined hours.

Area Alarm
Sends a notification if the machine leaves a pre-defined area.

https://truckmanualshub.com/

Engine

Model	ISUZU AR-4JJ1XASK-02
Type	4 cycle, water cooled, overhead valve, vertical in-line, direct injection type, with turbo-charger. Tier IV certified.
No. of cylinders	4
Bore and stroke	3.75" {95.4 mm} x 4.13" {104.9 mm}
Displacement	183.0 cu.in {2.999 L}
Rated power output	95.6 hp {71.3 kW} / 2,000 rpm (ISO 9249 : with fan)
	105.3 hp {78.5 kW} / 2,000 rpm (ISO 14396 : without fan)
Max. torque	256 lb-ft {347 N-m} / 1,800 rpm (ISO 9249 : with fan)
	277 lb-ft {375 N-m} / 1,800 rpm (ISO 14396 : without fan)

Hydraulic System

Pump	
Type	Two variable displacement piston pumps
Max. discharge flow	2 x 34.3 U.S.gpm {2 x 130 L/min}
	1 x 5.3 U.S.gpm {1 x 20 L/min}
Relief valve setting	
Excavating circuits (main)	4,970 psi {34.3 MPa}
Travel circuit	4,970 psi {34.3 MPa}
Swing circuit	4,060 psi {28.0 MPa}
Pilot control circuit	725 psi {5.0 MPa}
Nibbler (Crusher) circuit	Open & Close 3,553 psi {24.5 MPa} Rotation 2,990 psi {20.6 MPa}
Clamp arm circuit	Open & Close 3,553 psi {24.5 MPa} Up & Down 3,553 psi {24.5 MPa}
Main control valve	8-spool
Oil cooler	Air cooled type

Swing System

Swing motor	axial piston motor
Parking brake	Oil disk brake, hydraulic operated automatically
Swing speed	11.0 rpm {11.0 min^{-1}}
Swing torque	29,400 lb-ft {39.9 kN-m} (SAE)
Tail swing radius	5'3" {1,600 mm}
Min. front swing radius	7' {2,140 mm}

Travel System

Travel motors	2 x axial piston, two-speed motors
Travel brakes	Hydraulic brake per motor
Parking brakes	Oil disk brake per motor
Travel shoes	44 pads (each side)
Travel speed	3.5 / 2.1 mph {5.6 / 3.4 km/h}
Drawbar pulling force	31,000 lbs {138 kN} (SAE J 1309)
Gradeability	70% {35°}

Refilling Capacities & Lubrications

Fuel tank	50.2 U.S.gal {190 L}
Cooling system	2.38 U.S.gal {9.0 L}
Engine oil	3.43 U.S.gal {13.0 L}
Travel reduction gear	2 x 0.55 U.S.gal {2 x 2.1 L}
Swing reduction gear	0.44 U.S.gal {1.65 L}
Hydraulic oil tank	21.0 U.S.gal {79.3 L} tank oil level
	44.4 U.S.gal {168.0 L} hydraulic system
DEF/AdBlue tank	9.0 U.S.gal {33.9 L}

Operating Weight & Ground Pressure

Shoe width	19.7" {500 mm}
Ground pressure	9.1 psi {63 kPa}
Operating weight	44,300 lbs {20,100 kg}

Front Attachment

Model	KHE750PR-2	
Machine	SK140SRD	
Weight	2,070 lbs {940 kg}	
Shearing force (blade center)	57,300 lbf {255 kN}	
Crushing force (tooth-jaw tip)	19,900 lbf {88.3 kN}	
Operating pressure	open / close	3,550 psi {24.5 MPa}
	rotation	2,570 psi {17.7 MPa}

KHE750PR-2 (SK140SRD only)

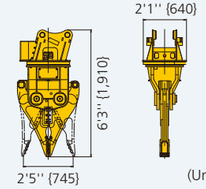

(Unit : ft-in {mm})

Dimensions

(Unit : ft-in {mm})

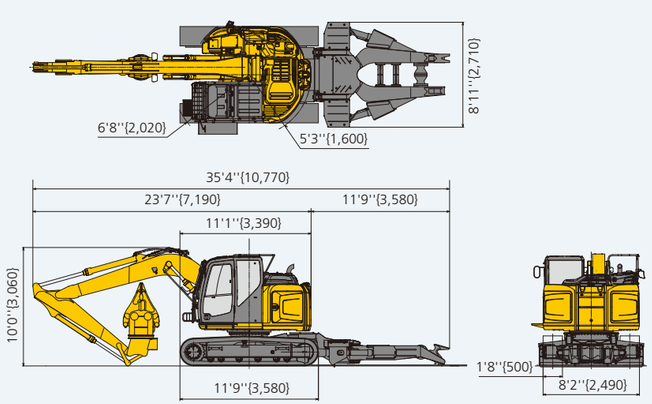

Working range

(Unit : ft-in {mm})

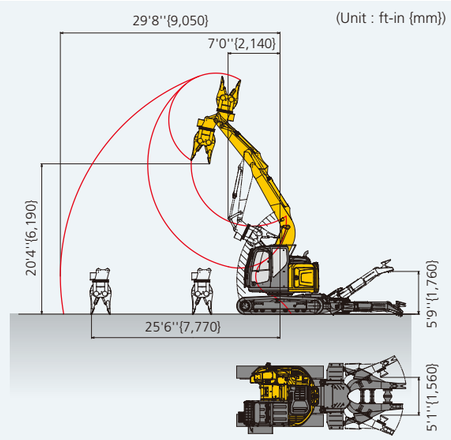

Engine

Model	HINO J05EUM-KSSC
Type	Direct injection, water-cooled, 4-cycle diesel engine with turbocharger, intercooler(Complies with EU (NRMM) Stage IV, EPA Tier IV Final.
No. of cylinders	4
Bore and stroke	4.41" {112 mm} x 5.12" {130 mm}
Displacement	312.6 cu.in {5.123 L}
Rated power output	160 hp {119 kW} / 2,000 rpm (ISO 9249 : with fan)
	166 hp {124 kW} / 2,000 rpm (ISO 14396 : without fan)
Max. torque	472 lb-ft {640 N-m} / 1,600 rpm (ISO 9249 : with fan)
	487 lb-ft {660 N-m} / 1,600 rpm (ISO 14396 : without fan)

Hydraulic System

Pump	
Type	Two variable displacement pumps + 1 gear pump
Max. discharge flow	2 x 58.1 U.S.gpm {2 x 220 L/min}
	1 x 5.3 U.S.gpm {1 x 20 L/min}
Relief valve setting	
Excavating circuits (main)	4,970 psi {34.3 MPa}
Travel circuit	4,970 psi {34.3 MPa}
Swing circuit	4,210 psi {29.0 MPa}
Pilot control circuit	725 psi {5.0 MPa}
Nibbler (Crusher) circuit	Open & Close 3,553 psi {24.5 MPa} Rotation 2,990 psi {20.6 MPa}
Clamp arm circuit	Open & Close 3,553 psi {24.5 MPa} Up&Down 3,553 psi {24.5 MPa}
Main control valve	8-spool
Oil cooler	Air cooled type

Swing System

Swing motor	axial piston motor
Parking brake	Oil disk brake, hydraulic operated automatically
Swing speed	12.7 rpm {12.7 min^{-1}}
Swing torque	52,700 lb-ft {71.5 kN-m} (SAE)
Tail swing radius	9'7" {2,910 mm}
Min. front swing radius	11'7" {3,540 mm}

Travel System

Travel motors	2 x axial piston, two-speed motors
Parking brakes	Oil disk brake per motor
Travel shoes	46 pads (each side)
Travel speed	3.7 / 2.2 mph {6.0 / 3.6 km/h}
Drawbar pulling force	51,500 lbs {229 kN} (SAE J 1309)
Gradeability	70% {35°}

Refilling Capacities & Lubrications

Fuel tank	84.5 U.S.gal {320 L}
Cooling system	5.0 U.S.gal {19 L}
Engine oil	5.4 U.S.gal {20.5 L}
Travel reduction gear	2 x 1.4 U.S.gal {2 x 5.3 L}
Swing reduction gear	0.7 U.S.gal {2.7 L}
Hydraulic oil tank	37.0 U.S.gal {140 L} tank oil level
	64.5 U.S.gal {244 L} hydraulic system
DEF/AdBlue tank	21.9 U.S.gal {83 L}

Operating Weight & Ground Pressure

Shoe width	24" {600 mm}
Ground pressure	9.7 psi {67 kPa}
Operating weight	66,100 lbs {30,000 kg}

Front Attachment

Model	KVE720PR	
Machine	SK210D	
Weight	4,080 lbs {1,850 kg}	
Shearing force (blade center)	121,200 lbf {539 kN}	
Crushing force (tooth-jaw tip)	44,100 lbf {196 kN}	
Operating pressure	open / close	4,260 psi {29.4 MPa}
	rotation	2,130 psi {14.7 MPa}

KVE720PR (SK210D only)

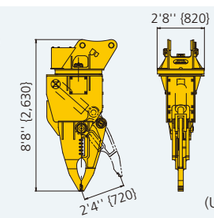

(Unit : ft-in {mm})

Dimensions

(Unit : ft-in {mm})

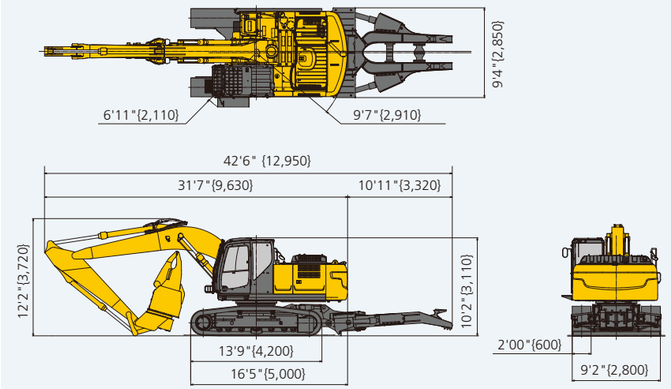

Working range
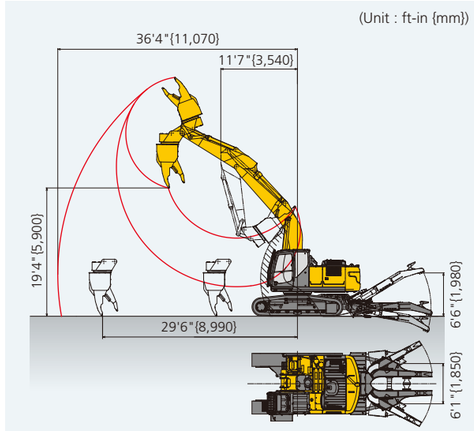
(Unit : ft-in {mm})