https://truckmanualshub.com/

JLG®

Operators and Safety Manual

Model
30e
35e
n35e
40e
n40e
45e

Property of American Airlines

3120742

August 14, 2001

ANSI

NQR ISO9001 REGISTERED COMPANY

UKAS QUALITY MANAGEMENT 015

JLG®

https://truckmanualshub.com/

CALIFORNIA PROPOSITION 65

BATTERY WARNING

Battery posts, terminals and related accessories contain lead and lead compounds, chemicals known to the State of California to cause cancer and reproductive harm.

WASH HANDS AFTER HANDLING !

Property of American Airlines

https://truckmanualshub.com/

FOREWORD

This manual is a very important tool! Keep it with the machine at all times.

The purpose of this manual is to provide owners, users, operators, lessors, and lessees with the precautions and operating procedures essential for the safe and proper machine operation for its intended purpose. It is important to stress proper machine usage at all times. All information in this manual must be read and understood before any attempt is made to operate the machine.

Because the manufacturer has no direct control over machine operation and application, proper safety practices are the responsibility of the owners, users, operators, lessors, and lessees.

All instructions in this manual are based upon the use of the machine under proper operating conditions, with no deviations from the original design. Any alteration or modification of the machine is strictly forbidden without written approval from JLG Industries, Inc.

Due to continuous product improvments, JLG Industries, Inc. reserves the right to make specification changes without prior notification. Contact JLG Industries, Inc. for updated information.

Property of American Airlines

https://truckmanualshub.com/

SAFETY ALERT SYMBOLS AND SAFETY SIGNAL WORDS

This is the Safety Alert Symbol. It is used to alert you to the potential personal injury hazards. Obey all safety messages that follow this symbol to avoid possible injury or death

The Safety Alert Symbol will be used with the appropriate Safety Signal Word of “DANGER” “WARNING” or “CAUTION” to a potential hazard and designate a level of seriousness. The Safety Signal Words are inserted throughout this manual in Black/White. On the machine, the Safety Signal Words will have either a Red, Orange, or Yellow background as part of a safety sign or decal. The “DANGER”, “WARNING”, and “CAUTION” Safety Signal Words, definitions, and associated colors are as follows:

DANGER

Indicates an imminently hazardous situation which, if not avoided, will result in serious injury or death. This signal word is used in the most extreme cases. When installed on the machine, this Signal Word will have a Red background as part of a decal.

WARNING

Indicates a potentiality hazardous situation which, if not avoided, could result in serious injury or death. When installed on the machine, this Signal Word will have an Orange background as part of a decal.

CAUTION

Indicates a potentiality hazardous situation which if not avoided, may result in minor or moderate injury. It may also be used to alert against unsafe practices. When installed on the machine, this Signal Word will have a Yellow background as part of a decal.

The “IMPORTANT” Safety Signal Word may also appear in this manual or on the machine. This Safety Signal Word typically will not appear with the Safety Alert Symbol, but contains important information that must be followed for safe and proper operation, The “IMPORTANT” Safety Signal Word definition and associated color is as follows.

IMPORTANT

Indicates procedures essential for safe operation and which, if not followed, may result in a machine malfunctioned damage. When installed in a machine, this Signal Word will have a Green background as part of a decal.

property of American Airlines

https://truckmanualshub.com/

⚠ WARNING

ALL SAFETY-RELATED BULLETINS MUST BE ACCOMPLISHED ON THIS PRODUCT. JLG INDUSTRIES, INC. MAY HAVE ISSUED SAFETY-RELATED BULLETINS FOR THIS JLG PRODUCT. CONTACT JLG INDUSTRIES, INC. OR THE LOCAL AUTHORIZED JLG DEALER FOR INFORMATION REGARDING SAFETY-RELATED BULLETINS WHICH MAY HAVE BEEN ISSUED FOR THIS PRODUCT.

IMPORTANT

FOR THE PURPOSE OF RECEIVING SAFETY-RELATED BULLETINS, IT IS IMPORTANT THAT THE CURRENT OWNER OF THIS UNIT ENSURES JLG INDUSTRIES, INC. HAS UPDATED OWNERSHIP INFORMATION. CONTACT JLG INDUSTRIES, INC. TO ENSURE THAT THE CURRENT OWNER RECORDS ARE UPDATED AND ACCURATE.

IMPORTANT

JLG INDUSTRIES, INC. MUST BE NOTIFIED IMMEDIATELY IN ALL INSTANCES WHERE JLG PRODUCTS HAVE BEEN INVOLVED IN AN ACCIDENT INVOLVING BODILY INJURY OR DEATH OF PERSONNEL OR WHEN SUBSTANTIAL DAMAGE HAS OCCURRED TO PERSONAL PROPERTY OR THE JLG PRODUCT

.

Property of American Airlines

FOR:

- **Accident Reporting**
- **Product Safety Publications**
- **Current Owner Updates**
- **Questions Regarding Product Safety**
- **Standards and Regulations Compliance Information**
- **Questions Regarding Special Product Applications**
- **Questions Regarding Product Modifications**

CONTACT:

Product Safety and Reliability Department
JLG Industries, Inc.
1 JLG Drive
McConnellsburg, PA 17233

Toll Free: 877-JLG-SAFE
877-554-7233

E-mail: ProductSafety@JLG.com

https://truckmanualshub.com/

REVISION LOG

September 1997 - Original Issue

August 14, 2001 Revised

Property of American Airlines

https://truckmanualshub.com/

TABLE OF CONTENTS

SUBJECT - SECTION, PARAGRAPH **PAGE NO.**

SECTION - FOREWORD

SECTION 1 - SAFETY PRECAUTIONS

1.1 General 1-1
1.2 Pre-operation 1-1
1.3 Operation 1-2
1.4 Towing, Lifting, And Hauling 1-5
1.5 Maintenance 1-6

SECTION 2 - PREPARATION AND INSPECTION

2.1 GENERAL 2-1
2.2 PREPARATION FOR USE 2-1
2.3 DELIVERY AND FREQUENT INSPECTION 2-1
2.4 Daily Walk-Around Inspection 2-5
2.5 dAILY FUNCTIONAL CHECK 2-9
2.6 TORQUE REQUIREMENTS 2-9
2.7 BATTERY MAINTENANCE AND CHARGING 2-10

SECTION 3 - USER RESPONSIBILITIES AND MACHINE CONTROLS

3.1 GENERAL 3-1
3.2 PERSONNEL TRAINING 3-1
3.3 OPERATING CHARACTERISTICS AND LIMITATIONS 3-2
3.4 CONTROLS AND INDICATORS 3-2

SECTION 4 - MACHINE OPERATION

4.1 DESCRIPTION 4-1
4.2 GENERAL 4-1
4.3 MOTOR OPERATION 4-1
4.4 TRAVELING (Driving) 4-2
4.5 STEERING 4-2
4.6 PLATFORM 4-3
4.7 BOOM 4-3
4.8 BOOM FUNCTION SPEEDS 4-4
4.9 SHUT DOWN AND PARK 4-4
4.10 MACHINE TIE DOWN 4-4
4.11 MACHINE LIFTING 4-6

SECTION 5 - OPTIONAL EQUIPMENT

5.1 MOTION ALARM 5-1
5.2 FOAM FILLED TIRES 5-1
5.3 NON-MARKING TIRES 5-1
5.4 ROTATING BEACON 5-1
5.5 TILT ALARM 5-1
5.6 WHEEL COVERS 5-1
5.7 BATTERY PACKS 5-1
5.8 PLATFORM LIGHTS 5-1
5.9 Control Console Cover 5-1
5.10 CYLINDER BELLOWS 5-1
5.11 STEEL HOOD COVERS. (30 electric) 5-1
5.12 WORK PLATFORM. (35/40/n40/45 electric) 5-1
5.13 SIMULTANEOUS DRIVE / LIFT / STEER. (n40/40/45 electric) 5-1

Property of American Airlines

https://truckmanualshub.com/

SECTION 6 - EMERGENCY PROCEDURES

6.1 GENERAL. 6-1
6.2 EMERGENCY TOWING PROCEDURES. 6-1
6.3 EMERGENCY CONTROLS AND THEIR LOCATIONS. 6-1
6.4 EMERGENCY OPERATION. 6-2
6.5 INCIDENT NOTIFICATION. 6-2

SECTION 7 - INSPECTION AND REPAIR LOG

LIST OF FIGURES

LIST OF FIGURES

FIGURE NO.	TITLE	PAGE NO.
2-1.	Boom Nomenclature. (30/35/n35 electric)	2-3
2-2.	Boom Nomenclature. (40/n45/45electric)	2-4
2-3.	Daily walk-around Inspection. (Sheet 1 of 3)	2-6
2-4.	Lubrication Chart - 30 electric. (Sheet 1 of 6)	2-11
2-4.	lubrication Chart - 30 electric. (Sheet 2 of 6)	2-12
2-4.	Lubrication Chart - 35/n35 electric. (Sheet 3 of 6)	2-13
2-4.	Lubrication Chart - 35/n35 electric. (Sheet 4 of 6)	2-14
2-4.	Lubrication Chart - 40/n40/45 electric. (Sheet 5 of 6)	2-15
2-5.	Torque Chart.	2-17
3-1.	Position of Least Forward Stability, 30 electric. (Sheet 1 of 3)	3-3
3-1.	Position of Least Forward Stability, 35/n35 electric. (Sheet 2 of 3)	3-4
3-1.	Position of Least Forward Stability, 40/n40/45 electric. (Sheet 3 of 3)	3-5
3-2.	Position of Least Backward Stability, 30 electric. (Sheet 1 of 3)	3-6
3-2.	Position of Least Backward Stability, 35/n35 electric. (Sheet 2 of 3)	3-7
3-2.	Position of Least Backward Stability, 40/n40/45 electric. (Sheet 3 of 3)	3-8
3-3.	Ground Control Station, 30 electric. (Sheet 1 0f 4)	3-9
3-4.	Platform Control Console.	3-13
4-1.	Grade and Side Slopes.	4-3
4-2.	Upright Positioning Models 40e and 45e.	4-5
4-3.	Chassis & Platform Tie Down. (All Models)	4-7
4-4.	Lifting Chart.	4-8

LIST OF TABLES

LIST OF TABLES

TABLE NO.	TITLE	PAGE NO.
1-1	Minimum Safe Approach Distances (M.S.A.D.)	1-4
7-1	Inspection and Repair Log	3

Property of American Airlines

https://truckmanualshub.com/

SECTION 1. SAFETY PRECAUTIONS

1.1 GENERAL

This section outlines the necessary precautions for proper and safe machine usage and maintenance. In order to promote proper machine usage, it is mandatory that a daily routine is established based on the content of this manual. A maintenance program, using the information provided in this manual and the Service and Maintenance Manual, must also be established by a qualified person and must be followed to ensure that the machine is safe to operate.

The owner/user/operator/lessor/lessee of the machine should not accept operating responsibility until this manual has been read, training is accomplished, and operation of the machine has been completed under the supervision of an experienced and qualified operator.

The owner/user/operator/lessor/lessee must be familiar with Sections 6, 7, 8, 9, 10 of ANSI A92.5-1992. These sections contain the responsibilities of the owner, user, operator, lessor, and lessee concerning safety, training, inspection, maintenance, application, and operation.

If there are any questions with regard to safety, training, inspection, maintenance, application, and operation, please contact JLG Industries, Inc. ("JLG").

⚠ WARNING

FAILURE TO COMPLY WITH THE SAFETY PRECAUTIONS LISTED IN THIS MANUAL COULD RESULT IN MACHINE DAMAGE, PROPERTY DAMAGE, PERSONAL INJURY OR DEATH.

1.2 PRE-OPERATION

Operator Training and Knowledge

- The Operators and Safety Manual must be read and understood entirety before operating the machine. For clarification, questions, or additional information regarding any portions of this manual, contact JLG Industries, Inc.

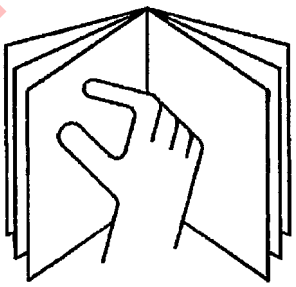

- An operator must not accept operating responsibilities until adequate training has been given by competent and authorized persons.
- Allow only those authorized and qualified personnel to operate the machine who have demonstrated that they understand the safe and proper operation and maintenance of the unit.
- Read, understand, and obey all DANGERS, WARNINGS, CAUTIONS, and operating instructions on the machine and in this manual.
- Ensure that the machine is to be used in a manner which is within the scope of its intended application as determined by JLG.
- All operating personnel must be familiar with the emergency controls and emergency operation of the machine as specified in this manual.
- Read, understand, and obey all applicable employer, local, and governmental regulations as they pertain to your utilization and application of the machine.

Workplace Inspection

- Precautions to avoid all hazards in the work area must be taken by the user before operation of the machine.
- Do not operate or raise the platform from a position on trucks, trailers, railway cars, floating vessels, scaffolds or other equipment unless the application is approved in writing by JLG.
- Before operation, check work area for overhead hazards such as electric lines, bridge cranes, and other potential overhead obstructions.
- Check floor surfaces for holes, bumps, drop-offs, obstructions, debris, concealed holes, and other potential hazards.
- Check the work area for hazardous locations. Do not operate the machine in hazardous environments unless approved for that purpose by JLG.
- Ensure that the ground conditions are adequate to support the maximum tire load indicated on the tire load decals located on the chassis adjacent to each wheel.
- Do not operate the machine when wind conditions exceed 30 mph (12.5 m/s).
- This machine can be operated in nominal ambient temperatures of 0° F to 104° F (-20° C to 40° C). Consult JLG to optimize operation outside of this temperature range.

Property of American Airlines

https://truckmanualshub.com/

Machine Inspection

- Do not operate this machine until the inspections and functional checks have been performed as specified in the Preparation and Inspection section of this manual.
- Do not operate this machine until it has been serviced and maintained according to the maintenance and inspection requirements as specified in the machine's Service and Maintenance Manual.
- Ensure the footswitch and all other safety devices are operating properly. Modification of these devices is a safety violation.

⚠ WARNING

MODIFICATION OR ALTERATION OF AN AERIAL WORK PLATFORM SHALL BE MADE ONLY WITH PRIOR WRITTEN PERMISSION FROM THE MANUFACTURER

- Do not operate any machine on which the safety or instruction placards or decals are missing or illegible.
- Check the machine for modifications to original components. Ensure that any modifications have been approved by JLG.
- Avoid accumulation of debris on platform floor. Keep mud, oil, grease, and other slippery substances from footwear and platform deck.

1.3 OPERATION

General

- Do not use the machine for any purpose other than positioning personnel, their tools, and equipment.
- Before operation, the user must be familiar with the machine capabilities and operating characteristics of all functions. (Ref. Table 4-1 Machine Operation.)
- Never operate a malfunctioning machine. If a malfunctions occurs, shut down the machine. Remove the unit from service and notify the proper authorities.
- Do not remove, modify, or disable the footswitch or any other safety devices.
- Never slam a control switch or lever through neutral to an opposite direction. Always return switch to neutral and stop before moving the switch to the next function. Operate controls with slow and even pressure.
- Hydraulic cylinders should never be left at end of travel (fully extended or fully retracted) before shutdown or for long periods of time. Always "bump" control in opposite direction slightly when function reaches end of travel. This applies both to machines in operation or in the stowed position.
- Do not allow personnel to tamper with or operate the machine from the ground with personnel in the platform, except in an emergency.
- Do not carry materials directly on platform railing unless approved by JLG.
- When two or more persons are in the platform, the operator shall be responsible for all machine operations.
- Always ensure that power tools are properly stowed and never left hanging by their cord from the platform work area.
- When driving, always position boom over rear axle in line with the direction of travel. Remember, if boom is over the front axle, the direction of steer and drive will be opposite from normal operation.
- Do not assist a stuck or disabled machine by pushing, pulling, or by using boom functions. Assist only by pulling at the chassis tie-down lugs.
- Do not place boom or platform against any structure to steady the platform or to support the structure.
- Stow boom and shut off all power before leaving machine.

Property of American Airlines

https://truckmanualshub.com/

Trip and Fall Hazards

JLG Industries, Inc. requires that all persons in the platform wear a full body harness with a lanyard attached to an authorized lanyard anchorage point while operating this machine. For further information regarding fall protection requirements on JLG products, contact JLG Industries, Inc.

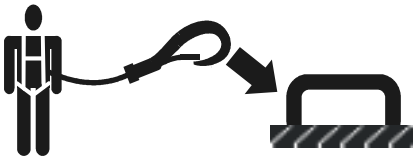

- Prior to operation, ensure all gates are fastened and secured in their proper position. Identify the designated lanyard anchorage point(s) at the platform and securely attach the lanyard. Attach only one (1) lanyard per lanyard anchorage point.

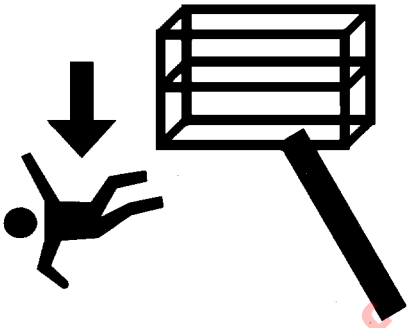

- Keep both feet firmly positioned on the platform floor at all times. Never position ladders, boxes, steps, planks, or similar items on unit to provide additional reach for any purpose.
- Never use the boom assembly to gain access to or leave the platform.
- Use extreme caution when entering or leaving platform. Ensure that the boom is fully lowered. Face the machine when entering or leaving the platform. Always maintain “three point contact” with the machine, using two hands and one foot or two feet and one hand at all times during entry and exit.
- Platform-to-structure transfers at elevated positions are discouraged. Where transfer is necessary, enter/exit through the gate only with the platform within 1 foot (0.3m) of a safe and secure structure. 100% tie-off is also required in this situation utilizing two lanyards. One lanyard must be attached to the platform with the second lanyard attached to the structure. The lanyard connected to the platform must not be disconnected until such time the transfer to the structure is safe and complete.
- Keep oil, mud, and slippery substances cleaned from footwear and the platform floor.

Electrocution Hazards

- This machine is not insulated and does not provide protection from contact with an electrically charged conductor.

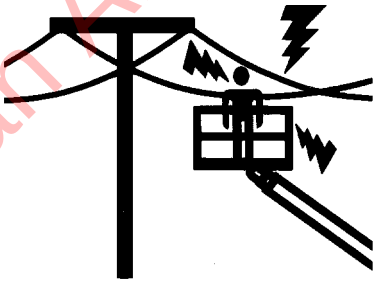

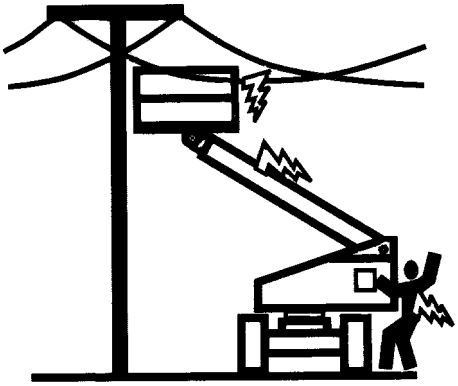

- Maintain safe clearance from electrical lines, apparatus, or any energized (exposed or insulated) parts in accordance with the Minimum Safe Approach Distance (MSAD) as specified in Table 1-1. Allow for machine movement and electrical line swaying.

Property of American Airlines

https://truckmanualshub.com/

Table 1-1.Minimum Safe Approach Distances (M.S.A.D.)

Voltage Range (Phase to Phase)	MINIMUM SAFE APPROACH DISTANCE in Feet (Meters)
0 to 300V	AVOID CONTACT
Over 300V to 50 KV	10 (3)
Over 50KV to 200 KV	15 (5)
Over 200 KV to 350 KV	20 (6)
Over 350 KV to 500 KV	25 (8)
Over 500 KV to 750 KV	35 (11)
Over 750 KV to 1000 KV	45 (14)

- Maintain a clearance of at least 10 ft (3m) between any part of the machine and its occupants, their tools, and their equipment from any electrical line or apparatus carrying up to 50,000 volts. One foot additional clearance is required for every additional 30,000 volts or less.

⚠ DANGER

DO NOT MANEUVER MACHINE OR PERSONNEL INSIDE PROHIBITED ZONE (MSAD). ASSUME ALL ELECTRICAL PARTS AND WIRING ARE ENERGIZED UNLESS KNOWN OTHERWISE.

Tipping Hazards

- Ensure that the ground conditions are adequate to support the maximum tire load indicated on the machine. Do not travel on unsupported surfaces.
- The user should be familiar with the driving surface before driving. Do not exceed the allowable sideslope and grade while driving.

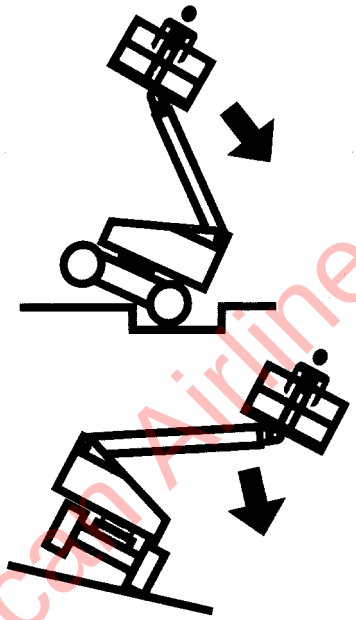

- Do not elevate platform or drive with platform elevated while on a sloping, uneven, or soft surface. Ensure machine is positioned on a firm, level and uniformly supported surface before elevating platform or driving with the platform in the elevated position.
- Before driving on floors, bridges, trucks, and other surfaces, check allowable capacity of the surfaces.
- Never exceed the maximum work load as specified on the platform. Distribute loads evenly on platform floor. Keep all loads within the confines of the platform, unless authorized by JLG.

Property of American Airlines

https://truckmanualshub.com/

- Keep the chassis of the machine a minimum distance of 2 ft. (0.6m) from holes, bumps, drop-offs, obstructions, debris, concealed holes, and other potential hazards at the ground level.
- Never push or pull the machine or other objects by telescoping or retracting the boom.
- Never attempt to use the machine as a crane. Do not tie-off machine to any adjacent structure. Never attach wire, cable, or any similar items to platform.
- Do not operate the machine when wind conditions exceed 30 mph (12.5 m/s).
- Do not cover the platform sides or carry large surface-area items in the platform when operating outdoors. The addition of such items increases the exposed wind area of the machine.
- Do not increase the platform size with unauthorized deck extensions or attachments.
- If boom assembly or platform is caught so that one or more wheels are off the ground, all persons must be removed before attempting to free the machine. Use cranes, forklift trucks, or other appropriate equipment to stabilize machine and remove personnel.

Crushing and Collision Hazards

- Approved head gear must be worn by all operating and ground personnel.
- Keep hands and limbs away from boom assembly during operation.
- Watch for obstructions around machine and overhead when driving. Check clearances above, on sides, and bottom of platform when lifting or lowering platform.

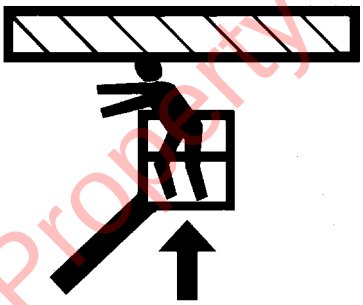

- During operation, keep all body parts inside platform railing.
- Use the boom functions, not the drive function, to position the platform close to obstacles.
- Always post a lookout when driving in areas where vision is obstructed.
- Keep non-operating personnel at least 6 ft. (1.8m) away from machine during all driving operations.
- Under all travel conditions, the operator must limit travel speed according to conditions of ground surface, congestion, visibility, slope, location of personnel, and other factors causing hazards of collision or injury to personnel.
- Be aware of stopping distances in all drive speeds. When driving in high speed, switch to low speed before stopping. Travel grades in low speed only.
- Do not use high speed drive in restricted or close quarters or when driving in reverse.
- Exercise extreme caution at all times to prevent obstacles from striking or interfering with operating controls and persons in the platform.
- Ensure that operators of other overhead and floor level machines are aware of the aerial work platform's presence. Disconnect power to overhead cranes. Barricade floor area if necessary.
- Avoid operating over ground personnel. Warn personnel not to work, stand, or walk under a raised boom or platform. Position barricades on floor as necessary.

1.4 TOWING, LIFTING, AND HAULING

- Never allow personnel in platform while towing, lifting, or hauling.
- This machine should not be towed, except in the event of emergency, malfunction, power failure, or loading/unloading. Refer to the Emergency Procedures section of this manual for emergency towing procedures.
- Ensure boom is in the stowed position and the turntable locked prior to towing, lifting or hauling. The platform must be completely empty of tools.
- When lifting machine, lift only at designated areas of the machine. Lift with lifting equipment of adequate capacity.
- Refer to the Machine Operation section of this manual for lifting information.

Property of American Airlines

https://truckmanualshub.com/

1.5 MAINTENANCE

General

This section contains general safety precautions which must be observed during maintenance of this machine. Additional precautions to be observed during machine maintenance are inserted at the appropriate points in this manual and in the Service and Maintenance Manual. It is of utmost importance that maintenance personnel pay strict attention to these precautions to avoid possible injury to personnel or damage to the machine or property. A maintenance program must be established by a qualified person and must be followed to ensure that the machine is safe.

Maintenance Hazards

- Shut off power to all controls and ensure that all operating systems are secured from inadvertent motion prior to performing any adjustments or repairs.
- Never work under an elevated platform until it has been fully lowered to the full down position, if possible, or otherwise supported and restrained from movement with appropriate safety props, blocking, or overhead supports.
- Always relieve hydraulic pressure from all hydraulic circuits before loosening or removing hydraulic components.
- Always disconnect batteries when servicing electrical components or when performing welding on the machine.
- Shut down the engine (if equipped) while fuel tanks are being filled.
- Ensure replacement parts or components are identical or equivalent to original parts or components.
- Never attempt to move heavy parts without the aid of a mechanical device. Do not allow heavy objects to rest in an unstable position. Ensure adequate support is provided when raising components of the machine.
- Remove all rings, watches, and jewelry when performing any maintenance. Do not wear loose fitting clothing or long hair unrestrained which may become caught or entangled in equipment.
- Use only clean approved non-flammable cleaning solvents.
- Never alter, remove, or substitute any items such as counterweights, tires, batteries, platforms or other items that may reduce or affect the overall weight or stability of the machine. Reference the Service and Maintenance Manual for the weights of critical stability items.

⚠ WARNING

MODIFICATION OR ALTERATION OF AN AERIAL WORK PLATFORM SHALL BE MADE ONLY WITH PRIOR WRITTEN PERMISSION FROM THE MANUFACTURER

Battery Hazards

- Always disconnect batteries when servicing electrical components or when performing welding on the machine.
- Do not allow smoking, open flame, or sparks near battery during charging or servicing.
- Do not contact tools or other metal objects across the battery terminals.
- Always wear hand, eye, and face protection when servicing batteries. Ensure that battery acid does not come in contact with skin or clothing.

⚠ WARNING

BATTERY FLUID IS HIGHLY CORROSIVE. AVOID CONTACT WITH SKIN AND CLOTHING AT ALL TIMES. IMMEDIATELY RINSE ANY CONTACTED AREA WITH CLEAN WATER AND SEEK MEDICAL ATTENTION.

- Charge batteries only in a well ventilated area.
- Avoid overfilling the battery fluid level. Add distilled water to batteries only after the batteries are fully charged.

Property of American Airmes

https://truckmanualshub.com/

SECTION 2. PREPARATION AND INSPECTION

2.1 GENERAL.

This section provides the necessary information needed by those personnel that are responsible to place the machine in operation readiness, and lists checks that are performed prior to use of the machine. It is important that the information contained in this section be read and understood before any attempt is made to operate the machine. Ensure that all the necessary inspections have been completed successfully before placing the machine into service. These procedures will aid in obtaining maximum service life and safe operation.

⚠ IMPORTANT

SINCE THE MACHINE MANUFACTURER HAS NO DIRECT CONTROL OVER THE FIELD INSPECTION AND MAINTENANCE, SAFETY IS THE RESPONSIBILITY OF THE OWNER/OPERATOR.

2.2 PREPARATION FOR USE.

Before a new machine is put into operation it must be carefully inspected for any evidence of damage resulting from shipment and inspected periodically thereafter, as outlined in Delivery and Frequent Inspection (see section 2-3). (During initial start-up and run,) the unit should be thoroughly checked for hydraulic leaks. A check of all components should be made to assure their security.

All preparation necessary to place the machine in operation readiness status is the responsibility of management personnel. Preparation requires good common sense, (i.e. lift works smoothly and brakes operate properly) coupled with a series of visual inspections. The mandatory requirements are given in the Daily Walk Around Inspection (see section 2-4).

It should be assured that the items appearing in the Delivery and Frequent Inspection and Functional Check are complied with prior to putting the machine into service.

2.3 DELIVERY AND FREQUENT INSPECTION.

NOTE: *This machine requires periodic safety and maintenance inspections by an authorized JLG Dealer. A decal located on the frame provides a place to record (stamp) inspection dates. Check decal and notify dealer if inspection is overdue.*

NOTE: *ANSI/SIA 92.5-1992 also requires an annual inspection to be performed. See annual machine inspection report CGF330.*

The following checklist provides a systematic inspection to assist in detecting defective, damaged, or improperly installed parts. The checklist denotes the items to be inspected and conditions to examine.

Frequent inspection shall be performed every 3 months or 150 hours whichever come first, or more often when required by environment, severity, and frequency of usage.

This inspection checklist is also applicable and must be followed for all machines that have been in storage or for all machines that have been exposed to harsh or changing climates.

These checks are also to be performed after maintenance has been performed on the machine.

Chassis.

1. Check front tires and wheel assemblies for loose or worn spindles, components and hardware for security, tires for wear, damage and proper inflation.
2. Check front axle for loose, missing, and worn parts, pivot pin for security.
3. Check steering assembly for loose or bent steer cylinder rods, steer cylinder and hydraulic lines for leaks and security, and hardware for proper installation.
4. Check rear tires and wheel assemblies for security, tires for wear, damage and proper inflation.
5. Check drive hubs for damage and leaks, and motors and brakes for damage.
6. Check oil level in drive hubs by removing ‘fill plug’ on top and ‘check plug’ on side. Fill from top with EPGL SAE90 until oil flows from check plug. Replace both plugs.
7. Check valves and hydraulic lines for damage, leakage and security.
8. Check pump/motor and accessories for damage, loose or missing parts, leakage and security. Check electrical connections for corrosion and tightness and wiring for insulation damage. Check hydraulic filter for condition of element. Replace as required.
9. Check hydraulic reservoir and hydraulic lines for damage, leakage and security.

Property of American Airlines

https://truckmanualshub.com/

10. Check batteries for damage, loose or missing vent caps, electrical connections for tightness and evidence of corrosion, and electrolyte level. Add only clean distilled water to battery after it has been charged.

Turntable.

11. Check turntable for damage, loose or missing parts, and security. Check lift cylinders and hydraulic lines for damage, leakage and security. Check swing drive motor for damage, loose or missing parts, hydraulic lines and component housings for evidence of leakage; worm gear for proper mesh with swing gear.
12. Check swing bearing for damage, wear, lubrication and loose or missing bearing bolts.
13. Check valves and hydraulic lines for damage, leakage, security and electrical connections for tightness and evidence of corrosion.
14. Check ground controls for damage, loose or missing parts, security, electrical connections for tightness and evidence of corrosion and wiring for insulation damage. Assure that all switches function properly.

NOTE: *JLG recommends replacing the hydraulic filter element after the first 50 hours of operation and then every 300 hours thereafter, unless operating conditions require earlier replacement.*

1. Check all cowl and access doors for damage, proper operation and security.
2. Check Lower Boom pivot bushings for lubrication and wear.
3. Check Lower Boom Lift Cylinder and hydraulic lines for damage, leakage and security.
4. Check all pin and shaft retaining hardware for security and wear.
5. Check all electrical cables for damage, loose and corroded connections.

30/35/n35 electric - Boom. (See Figure 2-1)

1. Check Lower Boom and leveling link for damage, missing parts and security.
2. Check all pin and shaft retaining hardware for security and wear.
3. Check hydraulic lines and electrical cable for damage, missing parts and security.
4. Check limit switch connections and plunger for corrosion and security.
5. Check limit switch connections and plunger for corrosion and security.
6. Check Upright for damage, wear, lubrication, and security.
7. Check Upper Boom lift cylinder and cross pins and hydraulic lines for damage, wear, lubrication, leakage and security.
8. Check Upper Boom pivot pin for damage, wear, lubrication and security.
9. Check Upper Boom for damage, missing parts and security.
10. Check hydraulic lines mounted on upright for damage, leakage and security.

NOTE: *The following, (10) thru (12) apply only to the 35 and n35 electric.*

1. Check Upper Boom wear pads for damage, missing parts and security.
2. Check Upper Boom telescope cylinder, cross pins and hydraulic lines for damage, wear, lubrication, leakage and security.
3. Check Platform Leveling Cylinder, cross pins and hydraulic lines for damage, wear, lubrication, leakage and security.

40/n40/45 electric - Boom. (See Figure 2-2)

1. Check Lower Boom and leveling link for damage, missing parts and security.
2. Check all pin and shaft retaining hardware for security and wear.
3. Check hydraulic lines and electrical cable for damage, missing parts and security.
4. Check limit switch connections and plunger for corrosion and security.
5. Check Lower Upright cross pins and hydraulic lines for damage, wear, lubrication, leakage and security.
6. Check Lower Upright for damage, wear, lubrication and security.
7. Check hydraulic lines mounted on upright for damage, leakage and security.
8. Check Mid Boom pivot shaft and lift cylinder for damage, missing parts and security.

Property of American Airlines

https://truckmanualshub.com/

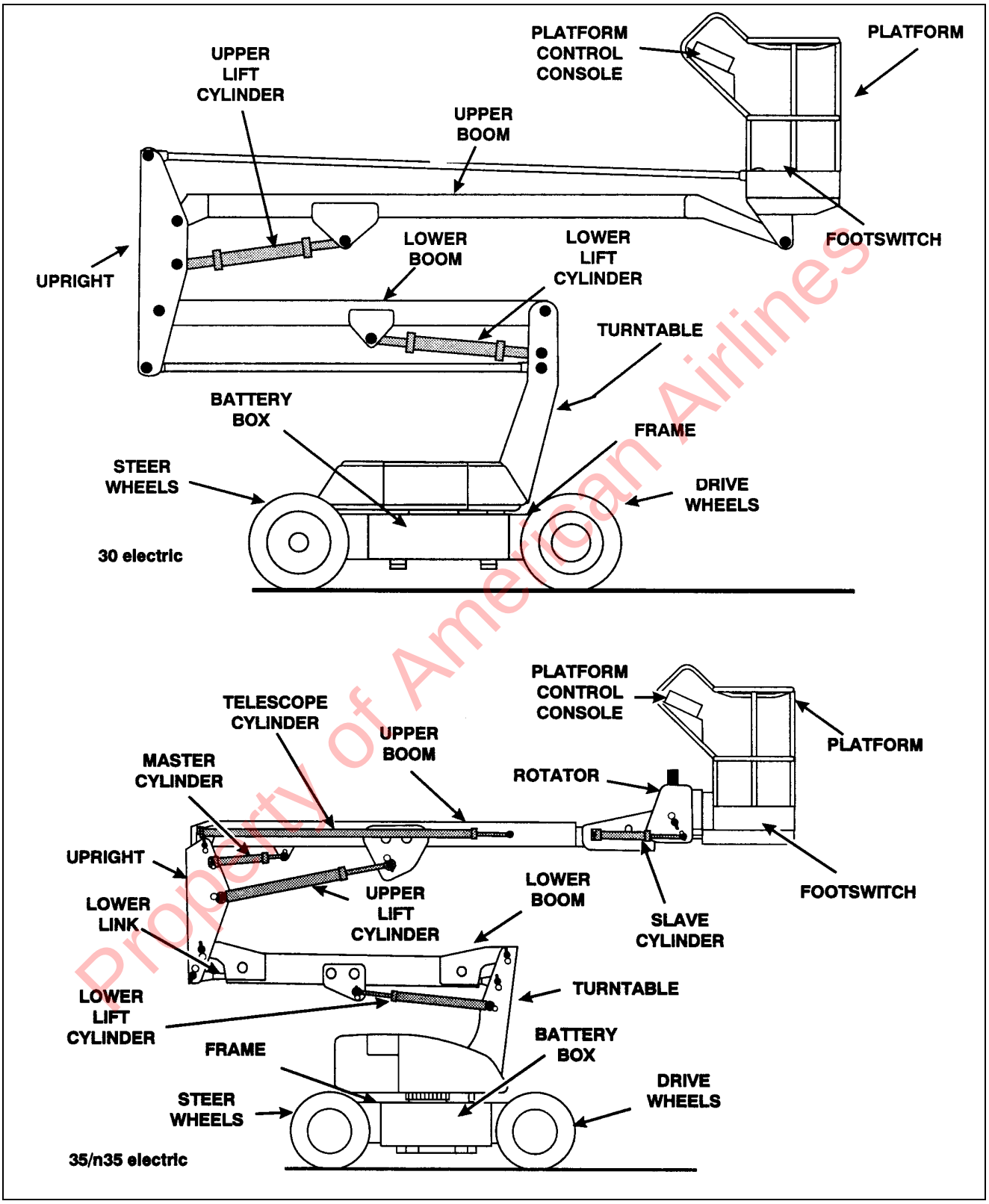

Property of American Airlines

Figure 2-1. Boom Nomenclature. (30/35/n35 electric)

https://truckmanualshub.com/

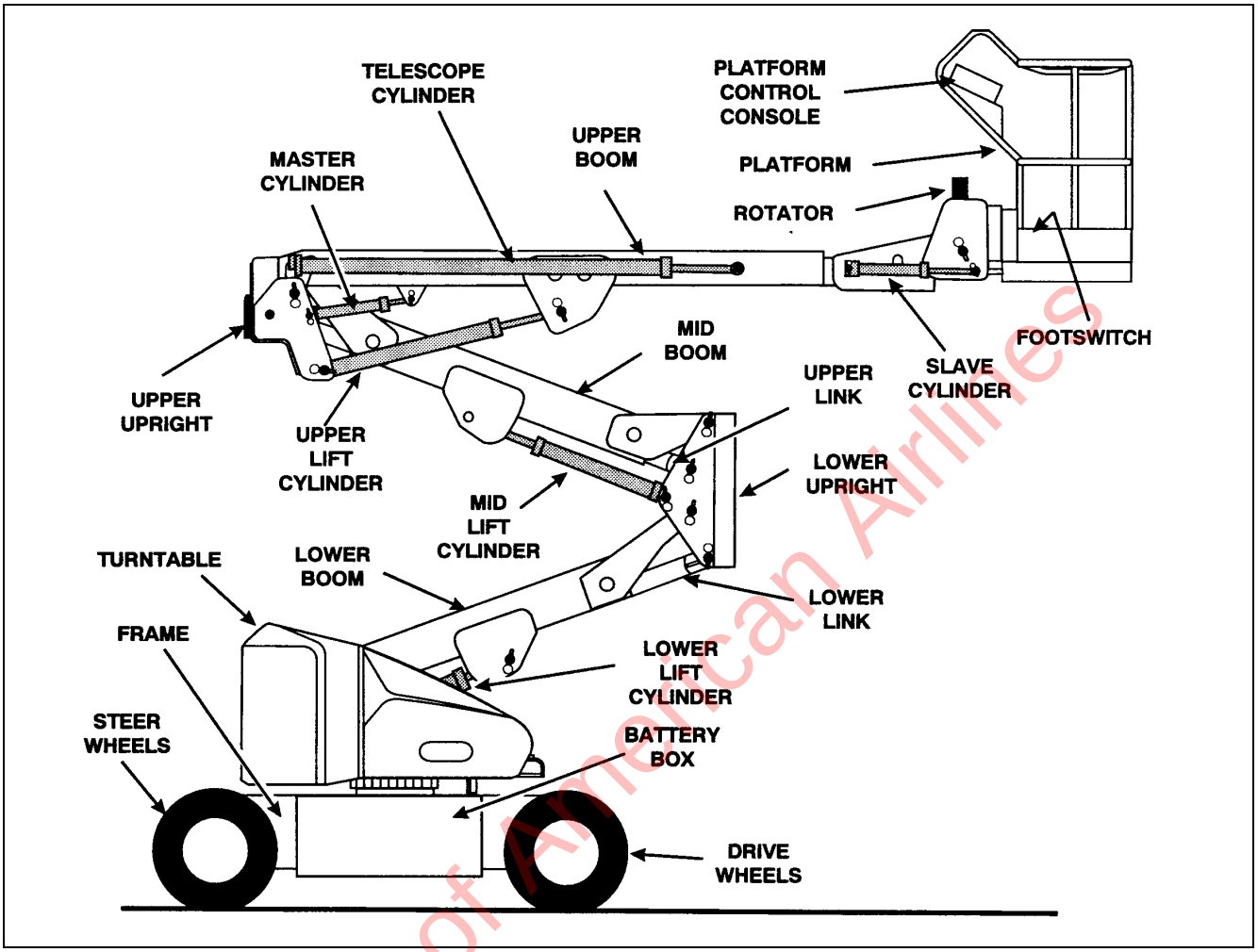

Figure 2-2. Boom Nomenclature. (40/n45/45electric)

Property of American Airlines

9. Check all pin and shaft retaining hardware for security and wear.
10. Check Upper Upright, cross pins and hydraulic lines for damage, wear, lubrication, leakage and security.
11. Check Upper Upright for damage, wear, lubrication and security.
12. Check hydraulic lines mounted on upright for damage, leakage and security.
13. Check Upper Boom Lift Cylinder and cross pins and hydraulic lines for damage, wear, lubrication, leakage and security.
14. Check Upper Boom pivot pin for damage, wear, lubrication and security.
15. Check Upper Boom for damage, missing parts and security.
16. Check Upper Boom wear pads for damage, missing parts and security.
17. Check Upper Boom telescope cylinder, cross pins and hydraulic lines for damage, wear, lubrication, leakage and security.
18. Check Platform Leveling Cylinder, cross pins and hydraulic lines for damage, wear, lubrication, leakage and security.

Platform.

1. Check platform and control console for damage, loose or missing parts, and security.

https://truckmanualshub.com/

2. Check control switches and levers for damage, loose or missing parts, and security. Assure that lever and lever lock functions properly.
3. Check control switches, levers and electrical connections for tightness and evidence of corrosion, and wiring for defects and chafing damage. Assure that switches function properly.
4. Check footswitch for damage, loose or missing parts, and security. Assure that footswitch functions properly and that wiring has no defects or chafing.
5. Check (35/n35/40/n40/45 electric) platform rotator mechanism for lubrication. Check hydraulic rotator reservoir for leakage, damage, and security.

NOTE: *Check all DANGER, WARNING, CAUTION, and INSTRUCTION placards for legibility and security on the entire machine*

WARNING

TO AVOID INJURY, DO NOT OPERATE MACHINE IF ALL PLACARDS ARE NOT ON THE MACHINE OR ARE DEFACED AND NOT READABLE. USE OF MACHINE WITHOUT CORRECT PLACARDS.IS A SAFETY VIOLATION

2.4 DAILY WALK-AROUND INSPECTION

It is the operators responsibility to inspect the machine before the start of each workday. It is recommended that each operator inspect the machine before operation, even if the machine has already been put into service under another operator. This Daily Walk-Around Inspection is the preferred method of inspection.

These checks are also to be performed after maintenance has been performed on the machine.

In addition to the Daily Walk-Around Inspection, be sure to include the following as part of the daily inspection:

1. Overall cleanliness.

   Check all standing surfaces for oil, fuel and hydraulic oil spillage and foreign objects. Ensure overall cleanliness.

2. Placards.

   Keep all information and operating placards clean and unobstructed. Cover when spray painting or shot blasting to protect legibility.

3. Operator's and Safety Manual.

   Ensure a copy of this manual and the ANSI A92.5-1992 Responsibilities, are enclosed in the manual storage box.

4. Machine Log.

   Ensure a machine operating record or log is kept, check to see that it is current and that no entries have been left uncleared, leaving machine in an unsafe condition for operation.

5. Start each day with a full fuel tank.

WARNING

TO AVOID INJURY, DO NOT OPERATE A MACHINE UNTIL ALL MALFUNCTIONS HAVE BEEN CORRECTED. USE OF A MALFUNCTIONING MACHINE IS A SAFETY VIOLATION.

TO AVOID POSSIBLE INJURY, BE SURE MACHINE POWER IS "OFF" DURING WALK-AROUND INSPECTION.

NOTE: *Check boom limit switches on upright for proper operation and security, both visually and manually. The lower switch cuts out drive speed when the lower boom is above horizontal. The upper switch cuts out drive speed when the upper boom is above horizontal. Only creep drive speed will continue to function.*

6. Check platform footswitch for proper operation. Switch must be released to start engine and depressed to operate machine.
7. Check that drive brakes hold when machine is driven up a grade not greater than specified on the serial number placard and stopped.

NOTE: *On new machines, those recently overhauled, or after changing hydraulic oil, operate all systems a minimum of two complete cycles and recheck oil level in reservoir.*

8. Assure that all items requiring lubrication are serviced. Refer to Lubrication Chart, Figure 2-3, for specific requirements.

Property of American Airlines

https://truckmanualshub.com/

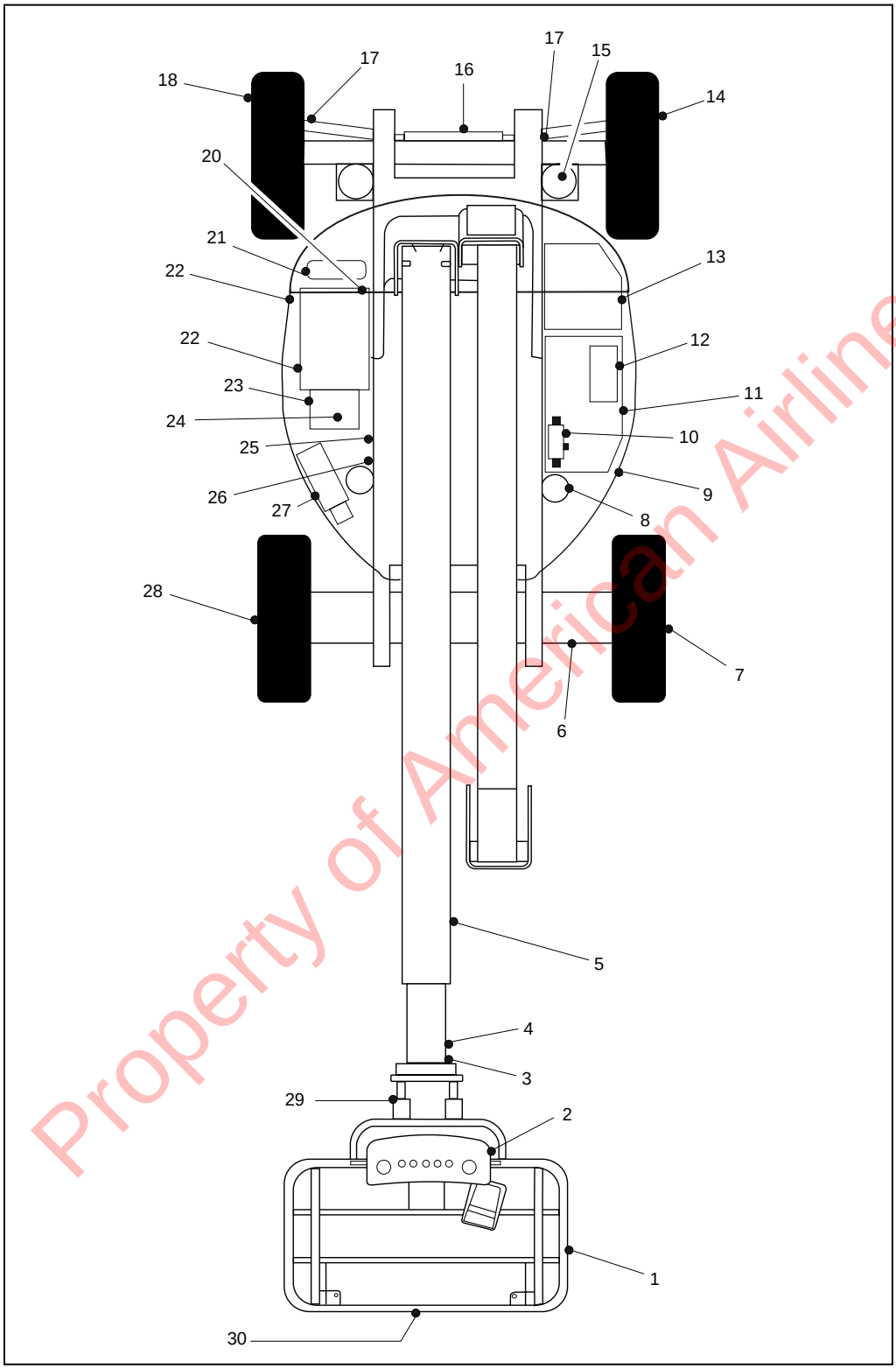

Property of American Airlines

Figure 2-3. Daily walk-around Inspection. (Sheet 1 of 3)

https://truckmanualshub.com/

GENERAL.

BEGIN YOUR WALK-AROUND INSPECTION AT ITEM 1, AS NOTED ON THE DIAGRAM. CONTINUE TO YOUR RIGHT (COUNTER-CLOCKWISE VIEWED FROM THE TOP) CHECKING EACH ITEM IN SEQUENCE FOR THE CONDITIONS LISTED IN THE FOLLOWING CHECKLIST.

⚠ WARNING

TO AVOID INJURY DO NOT OPERATE MACHINE UNTIL ALL MALFUNCTIONS HAVE BEEN CORRECTED. USE OF A MALFUNCTIONING MACHINE IS A SAFETY VIOLATION.

TO AVOID POSSIBLE INJURY BE SURE MACHINE POWER IS OFF DURING “WALK-AROUND INSPECTION”.

NOTE: *Do not overlook visual inspection of chassis underside. Checking this area may result in discovery of conditions which could cause extensive machine damage.*

The following inspection steps are for all 30/35/n35/40/n40/45 electric models except where noted.

1. Platform Assembly - No loose or missing parts; no visible damage. Platform mounting pins secure. Footswitch in good working order; not modified, disabled or blocked.
2. Platform Control Console - Switches and control lever properly secured; no loose or missing parts; no visible damage; placards secure and legible; control lever and switches return to neutral; control lever lock functions properly; emergency stop switch functions properly; control markings legible.
3. Fly Boom Nose and Platform Support - Ensure fly boom nose and platform support are free of debris, obstructions, etc.
4. Rotator Motor and Rotator Cylinder **35/n35/40/n40/45 electric** - No visible damage; motor and cylinder pins secure; hydraulic hoses undamaged, not leaking.
5. Slave Cylinder **35/n35/40/n40/45 electric** - No visible damage; pivot pins secure; hydraulic hoses undamaged, not leaking.
6. Boom Sections/Lift Cylinders and Master Cylinder - No visible damage; pivot pins secure; hydraulic hoses undamaged, not leaking.
7. Telescope Cylinder and Power Track **35/n35/40/n40/45 electric** - No visible damage; no loose or missing hardware.
8. Limit Switches - Switches operable; no visible damage.
9. Drive Motor, Brake and Hub, Right Rear - No visible damage; no evidence of leakage.
10. Drive Wheel/Tire Assembly, Right Rear - Properly secured; no loose or missing wheel bolts; no visible damage.
11. Hydraulic Oil Filter Housing **40/n40/45 electric** - Secure; no visible signs of damage or leakage.
12. Hydraulic Pump and Reservoir - Properly secured; no visible damage or hydraulic leaks. Recommended hydraulic fluid level on dipstick (system shut down, boom in stowed position). Breather cap/dipstick secure and working.
13. Turntable Bearing - No loose or missing hardware; no visible damage; evidence of proper lubrication. No loose bolts or looseness between bearing and structure.
14. Battery Compartment Right Side - Batteries have proper electrolyte level; cables tight; no visible damage or corrosion.
15. Cowling and Latches - All cowling, doors and latches in working condition; properly secured; no loose or missing parts.
16. Ground Controls **30 electric** - Switches operable; no visible damage; emergency stop switch functions properly; placards secure and legible.
17. Control Valve **30/35/n35 electric** - No loose or missing parts; evidence of leakage; unsupported wires or hoses; damaged or broken wires.

Property of American Airlines

Figure 2-3. Daily walk-Around Inspection. (Sheet 2 of 3)

https://truckmanualshub.com/

18. Ground Controls **35/n35 electric** - Switches operable; no visible damage; emergency stop switch functions properly; placards secure and legible.
19. Battery Charger - No damage; properly secured.
20. Valve - No loose or missing parts; evidence of leakage, unsupported wires or hoses; damaged or broken wires.
21. Boom/Upright - No visible damage; All pins properly secured. Upright in vertical position. If Upright does not rest on stop with machine in the stowed position, this indicates upright is out of plumb. (See Section 2-20 in service manual 3120743, for Boom Synchronizing procedure.)
22. Steer Wheel/Tire Assembly, Right Front - Properly secured; no loose or missing wheel bolts; no visible damage.
23. Counterweight - No loose or missing hardware; properly secured.
24. Steer Cylinder - Properly secured; no visible damage or signs of leakage; evidence of proper lubrication.
25. **Oscillating axle 35/n35/40/n40/45 electric** - No loose or missing hardware; no visible damage; evidence of proper lubrication.
26. **Hydraulic Oil Filter Housing 30 electric** - Secure; no visible signs of damage or leakage.
27. Tie Rod Ends and Steering Spindles - No loose or missing parts; no visible damage. Tie rod end stubs locked.
28. Drive Wheel/Tire Assembly, Left Rear - Properly secured; no loose or missing wheel bolts; no visible damage.
29. **Ground Controls 40/n40/45 electric** - Switches operable; no visible damage; emergency stop switch functions properly; placards secure and legible.
30. **Manual Descent Valve 40/n40/45 electric** - No visible damage; no evidence of leakage.
31. **Cowling and Latches 40/n40/45 electric** - All cowling, doors and latches in working condition; properly secured; no loose or missing parts.
32. Battery Compartment - Batteries have proper electrolyte level; cables tight; no visible damage or corrosion.
33. **Control Valve 40/n40/45 electric** - No loose or missing parts; evidence of leakage; unsupported wires or hoses; damaged or broken wires.
34. Swing Motor and Worm Gear - No loose or missing hardware; no visible damage; evidence of proper lubrication.
35. Drive Wheel/Tire Assembly, Left Rear - Properly secured; no loose or missing wheel bolts; no visible damage.
36. Drive Motor, Brake and Hub, Left Rear - No visible damage; no evidence of leakage.
37. Frame - No visible damage; no loose or missing hardware (top and underside).
38. Cowling and Latches - All cowling, doors and latches in working condition; properly secured; no loose or missing parts.
39. Platform Pivot Pins - Properly secured; evidence of proper lubrication.
40. Platform Gate - Latch and Hinges in working condition; properly secured; no loose or missing parts.

Property of American Airlines

Figure 2-3. Daily Walk-Around Inspection. (Sheet 3 of 3)

https://truckmanualshub.com/

2.5 DAILY FUNCTIONAL CHECK.

A functional check of all systems should be performed, once the walk-around inspection is complete, in an area free of overhead and ground level obstructions. First, using the ground controls, check all functions controlled by the ground controls. Next, using the platform controls, check all functions controlled by the platform controls.

⚠ WARNING

TO AVOID SERIOUS INJURY, DO NOT OPERATE MACHINE IF ANY CONTROL LEVERS OR TOGGLE SWITCHES CONTROLLING PLATFORM MOVEMENTS DO NOT RETURN TO THE OFF POSITION WHEN RELEASED.

⚠ WARNING

TO AVOID A COLLISION AND INJURY IF PLATFORM DOES NOT STOP WHEN A CONTROL SWITCH OR LEVER IS RELEASED, REMOVE FOOT FROM FOOTSWITCH OR USE EMERGENCY STOP TO STOP MACHINE.

1. Check boom limit switches. Raise and lower the Lower Boom. Check for smooth operation. Check Boom Upright tilting. (See Figure 4-2. Upright positioning Models 40e and 45e).

NOTE: *Perform checks from ground controls first, then from platform controls.*

2. Raise, extend, retract, and lower the Upper Boom. Check for smooth operation.
3. On models (40/n40/45 electric), if tower boom does not rest on stop with machine in the stowed position, this indicates upright is out of plumb.(Ref. 2-20 of service manual 3120743, for Boom Synchronizing procedure)
4. On models (35/n35/40/n40/45 electric), telescope boom IN and OUT several cycles at various degrees of elevation lengths. Check for smooth telescope operation.
5. Swing turntable to LEFT and RIGHT a minimum of 45 degrees. Check for smooth motion.
6. With the aid of an assistant to monitor the CHASSIS OUT OF LEVEL indicator light on the platform console, manually activate the indicator light by compressing one of the three tilt indicator mounting springs. If the light does not illuminate, shut down machine and contact a qualified service technician before continuing operation.
7. Check that platform self-leveling system functions properly during raising and lowering of boom.
8. On models (35/n35/40/n40/45 electric), check rotator for smooth operation and assure platform will rotate 75 degrees in both directions from centerline of boom.
9. Drive forward and reverse; check for proper operation.
10. Steer left and right; check for proper operation.
11. Footswitch.

⚠ WARNING

FOOTSWITCH MUST BE ADJUSTED SO THAT FUNCTIONS WILL OPERATE WHEN PEDAL IS APPROXIMATELY AT ITS CENTER OF TRAVEL. IF SWITCH OPERATES WITHIN LAST 1/4" (6 MM) OF TRAVEL, TOP OR BOTTOM, IT SHOULD BE ADJUSTED.

⚠ IMPORTANT

FOOTSWITCH MUST BE DEPRESSED PRIOR TO ACTIVATING ANY FUNCTION CONTROL, OTHERWISE THE FUNCTION WILL NOT WORK.

With footswitch depressed, operate LIFT and hold control. Remove foot from footswitch, motion should stop. If it does not, shut down machine and contact a qualified service technician.

12. Holding the GROUND/PLATFORM SELECT switch to GROUND. Platform controls should not operate.
13. Place GROUND/PLATFORM SELECT switch to OFF. Platform/Ground controls should not operate.

2.6 TORQUE REQUIREMENTS.

The Torque Chart (Figure 2-5) consists of standard torque values based on bolt diameter and grade, also specifying dry, wet and loctite torque values in accordance with recommended shop practices. This chart is provided as an aid to the operator in the event he/she notices a condition that requires prompt attention during the walk-around inspection or during operation, until the proper service personnel can be notified. The Service and Maintenance section provides specific torque values and periodic maintenance procedures with a listing of individual components. Utilizing this torque chart in conjunction with preventive maintenance section will enhance safety, reliability, and performance of the machine.

Property of American Airlines

https://truckmanualshub.com/

2.7 BATTERY MAINTENANCE AND CHARGING.

WARNING

TO AVOID INJURY FROM AN EXPLOSION, DO NOT SMOKE OR ALLOW SPARKS OR A FLAME NEAR BATTERY DURING SERVICING. ALWAYS WEAR EYE AND HAND PROTECTION WHEN SERVICING BATTERIES.

Battery Maintenance, Quarterly.

1. Open battery compartment cover to allow access to battery terminals and vent caps.

   CAUTION

   WHEN ADDING WATER TO BATTERIES, ADD WATER UNTIL ELECTROLYTE COVERS PLATES. DO NOT CHARGE BATTERIES UNLESS ELECTROLYTE COVERS THE PLATES.

NOTE: *When adding distilled water to batteries, non-metallic containers and/or funnels must be used.*

To avoid electrolyte overflow, add distilled water to batteries after charging.

When adding water to the battery, fill only to level indicated or 3/8" above separators.

2. Remove all vent caps and inspect electrolyte level of each cell. Electrolyte level should be to the ring approximately one inch from top of battery. Fill batteries with distilled water only. Replace and secure all vent caps.
3. Remove battery cables from each battery post one at a time, negative first. Clean cables with acid neutralizing solution (e.g. baking soda and water or ammonia) and wire brush. Replace cables and/or cable clamp bolts as required.
4. Clean battery post with wire brush then re-connect cable to post. Coat non-contact surfaces with mineral grease or petroleum jelly.
5. When all cables and terminal posts have been cleaned, ensure all cables are properly positioned and do not get pinched. Close battery compartment cover.
6. Start hydraulic system and ensure that it functions properly.

Battery Charging, Daily.

NOTE: *To avoid excessive battery charging time, do not allow batteries to become completely discharged.*

To avoid electrolyte overflow, add distilled water to batteries after charging.

When adding water to the battery, fill only to level indicated or 3/8" above separators.

1. Charge batteries at the end of each work day, or when machine performance is significantly reduced due to batteries becoming discharged.
2. Charge batteries in accordance with the following procedure:
   a. Open battery compartment, and battery charger compartment covers.

WARNING

WHEN BATTERY CHARGER IS TO BE USED, CHARGING HARNESS MUST BE PLUGGED INTO A GROUNDED 110 VOLT RECEPTACLE. IF RECEPTACLE IS NOT GROUNDED AND A MALFUNCTION SHOULD OCCUR, THE MACHINE COULD CAUSE SERIOUS ELECTRICAL SHOCK.

   b. Remove charging harness cable and connect to a 110 volt receptacle.
   c. Allow batteries to charge until ammeter on charger, if equipped, is reading zero (0). Normal charging time is 8-10 hours.

NOTE: *When batteries are completely charged, disconnect charging harness cable from receptacle. Store charging harness cable.*

   d. Ensure battery cables are positioned and are not pinched. Close and secure all compartment doors.
3. The battery packs on each side of the frame are designed to be easily removed so that a machine can have two sets of them in order to keep the machine functioning longer. Disconnect the cable quick connects, and remove the two clevis pins on top of the frame. Now, using the forklift pockets under the packs, have a forklift move them to a place where they can be recharged. The new battery packs can be installed by reversing the above procedure.

NOTE: *Battery packs are interchangeable.*

Property of American Airlines

https://truckmanualshub.com/

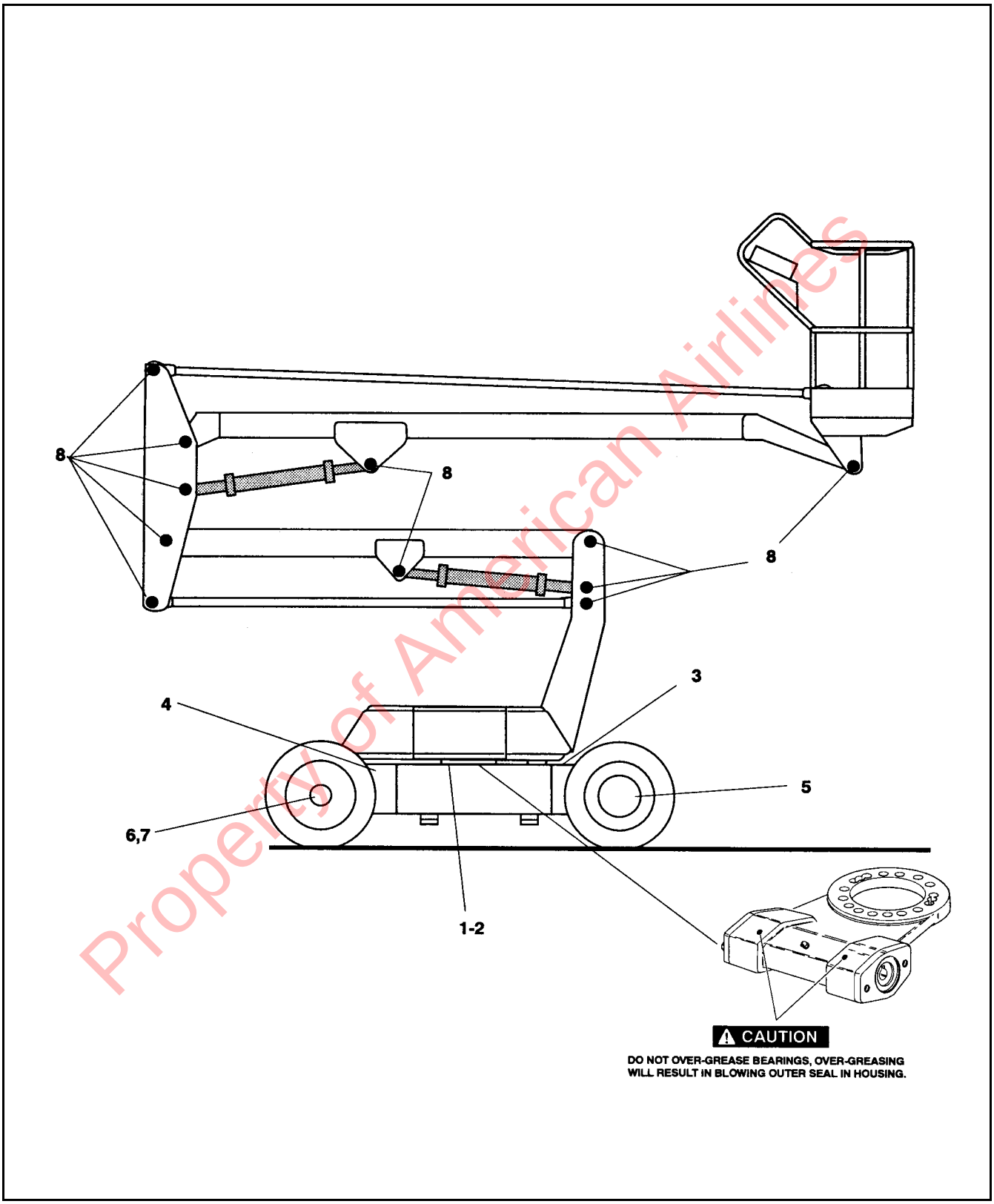

Property of American Airlines

Figure 2-4. Lubrication Chart - 30 electric. (Sheet 1 of 6)

https://truckmanualshub.com/

	COMPONENTS	NUMBER/TYPE LUBE POINTS	CAPACITY	LUBE	INTERVAL HOURS 3 MONTHS 150 HRS	6 MONTHS 300 HRS	1 YEAR 600 HRS	2 YEAR 1200 HRS	COMMENTS
LUBRICATION:									
1	Swing Bearing	1 Grease Fitting	A/R	BG/MPG	✓				BG will have a longer service interval than MPG.
2	Swing Bearing - Gear - Teeth	1 Grease Fitting	A/R	OG	✓				OG Open Gear Spray Lubricant
3	Swing Worm Gear - Bearing *	Plug	A/R	BG/MPG				✓	BG will have a longer service interval than MPG.
4	Hydraulic Fluid (Oil)	Fill Cap	4.0 Gallons Tank 4.8 Gallons System	HO				✓	Check oil every 10 hours of operation. Change oil every 1200 hours of operation.
5	Hydraulic Filter	N/A	N/A	N/A		✓			Replace filter element after first 50 hours and every 300 hours thereafter.
6	Wheel Drive Hub	Fill Plugs/Located at 4 or 8 Oclock	12 oz. (APPROX)	EPGL	✓				Check oil level at side plug on hub.
7	Wheel Bearing	Repack	A/R	MPG				✓	
8	Spindles/Bushing	N/A	A/R	LL	At spindle/bushing replacement.				Coat I.D. of bushings prior to installing king pins.
9	Boom Pivot Pins/Bushing	N/A	A/R	LL	At boom pivot pins/bushing replacement.				Coat I.D. of bushings prior to installing pins.

NOTE:

Lubrication intervals are based on machine operation under normal conditions. For machines used in multi shift operations and/or exposed to hostile environments or conditions, lubrication frequencies must be increased accordingly.

* If necessary install grease fittings into worm gear housing and grease bearings. Read CAUTION on diagram before greasing.

KEY TO LUBRICANTS:

BG - Mobilith SHC 460 Bearing Grease.
EPGL - Extreme Pressure Gear Lube.
HO - Hydraulic Oil - Modilfluid 424
LL - Synthetic Lithium Lubricant (Gredag 741 Grease).
MPG - Multi-Purpose Grease.
OG - Open Gear Lube (Mobiltac 375NC Spray)

Property of American Rentals

Figure 2-4. lubrication Chart - 30 electric. (Sheet 2 of 6)

https://truckmanualshub.com/

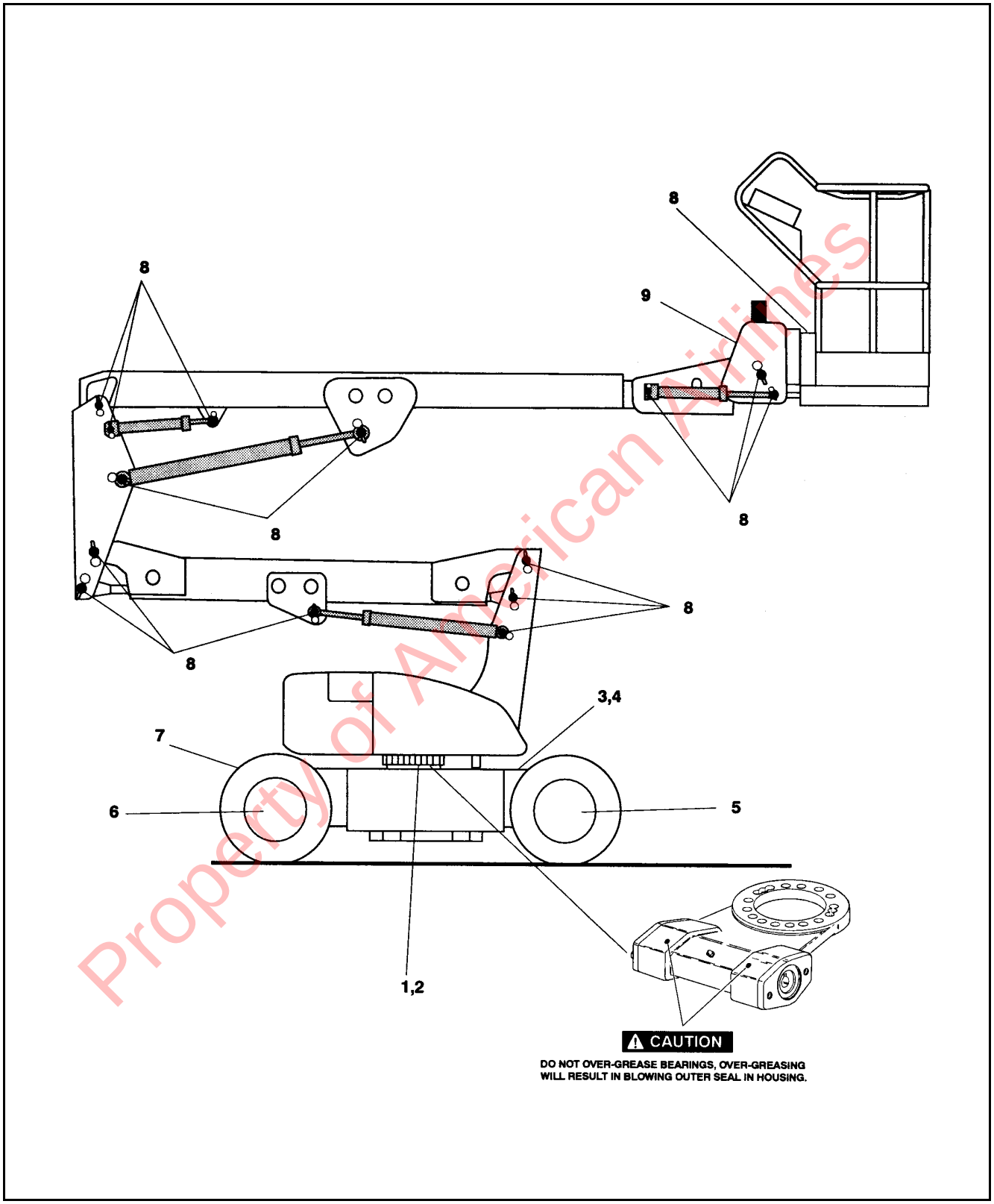

Property of American Airlines

Figure 2-4. Lubrication Chart - 35/n35 electric. (Sheet 3 of 6)

https://truckmanualshub.com/

	COMPONENTS	NUMBER/TYPE LUBE POINTS	CAPACITY	LUBE	INTERVAL HOURS 3 MONTHS 150 HRS	6 MONTHS 300 HRS	1 YEAR 600 HRS	2 YEAR 1200 HRS	COMMENTS
LUBRICATION:									
1	Swing Bearing	1 Grease Fitting	A/R	BG/MPG	✓				BG will have a longer service interval than MPG.
2	Swing Bearing - Gear - Teeth *	1 Grease Fitting	A/R	OG	✓				OG Open Gear Spray Lubricant
3	Swing Worm Gear - Bearing	Plug	A/R	BG/MPG				✓	BG will have a longer service interval than MPG.
4	Hydraulic Fluid (Oil)	Fill Cap	4.0 Gals Tank 4.8 Gals System	HO				✓	Check oil every 10 hours of operation. Change oil every 1200 hours of operation.
5	Hydraulic Filter	N/A	N/A	N/A		✓			Replace filter element after first 50 hours and every 300 hours thereafter.
6	Wheel Drive Hub	Fill Plug/Half Full	17 OZ. (1/2 Full)	EPGL	✓				Check oil level at side plug on hub.
7	Wheel Bearing	Repack	A/R	MPG				✓	
8	Spindles/Bushing	N/A	A/R	LL	At spindle/bushing replacement.				Coat I.D. of bushings prior to installing king pins.
9	Boom Pivot Pins/Bushing	N/A	A/R	LL	At boom pivot pins/bushing replacement.				Coat I.D. of bushings prior to installing pins.
10	Rotator Hydraulic Tank	Fill Cap	1 Quart.	HO				✓	Check oil every 10 hours of operation. Change oil every 1200 hours of operation.

NOTE:

Lubrication intervals are based on machine operation under normal conditions. For machines used in multi shift operations and/or exposed to hostile environments or conditions, lubrication frequencies must be increased accordingly.

* If necessary install grease fittings into worm gear housing and grease bearings. Read CAUTION on diagram before greasing.

KEY TO LUBRICANTS:

BG - Mobilith SHC 460 Bearing Grease.
EPGL - Extreme Pressure Gear Lube.
HO - Hydraulic Oil - Modilfluid 424
LL - Synthetic Lithium Lubricant (Gredag 741 Grease).
MPG - Multi-Purpose Grease.
OG - Open Gear Lube (Mobiltac 375NC Spray)

Figure 2-4. Lubrication Chart - 35/n35 electric. (Sheet 4 of 6)

Property of American Airlines

https://truckmanualshub.com/

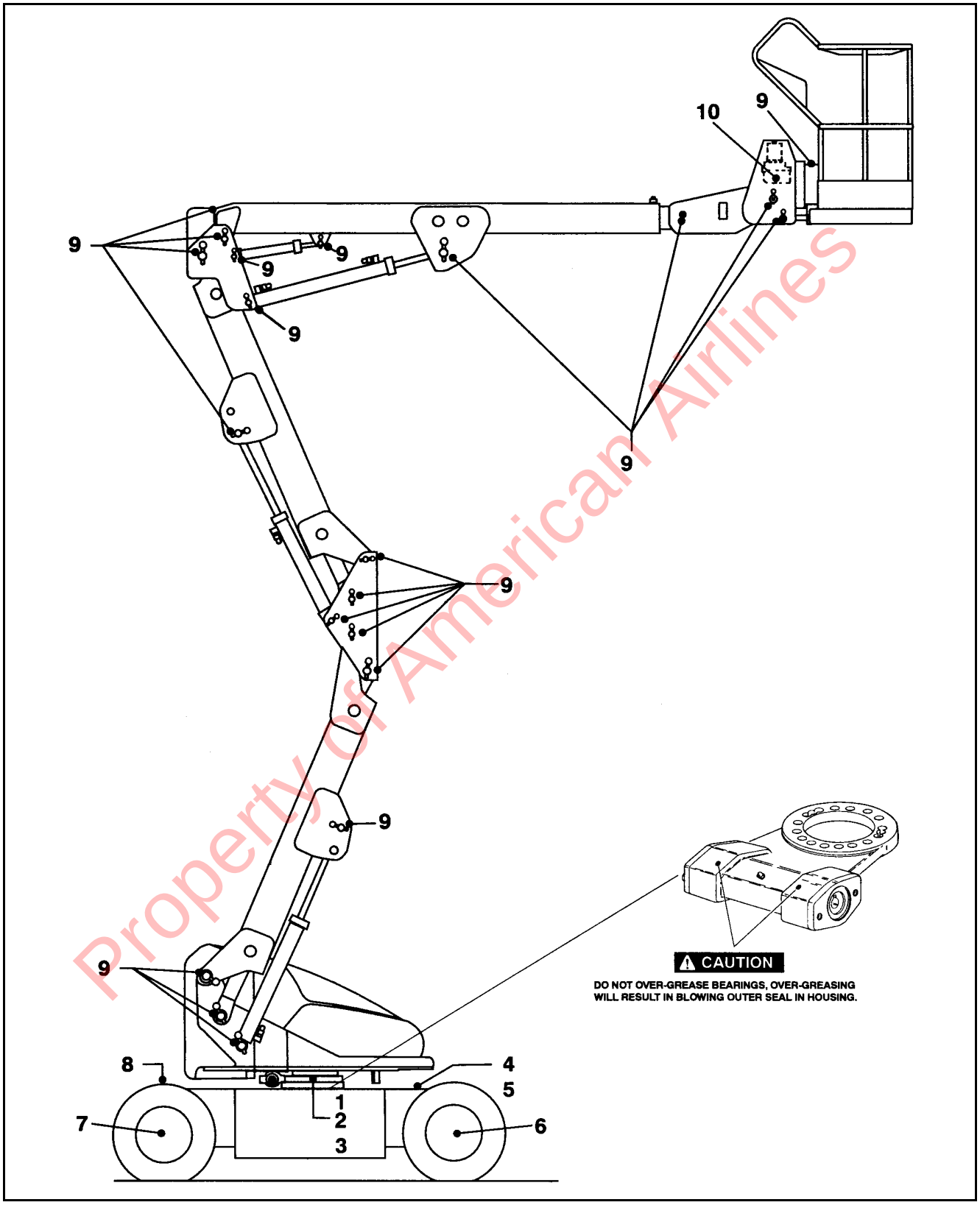

Property of American Airlines

Figure 2-4. Lubrication Chart - 40/n40/45 electric. (Sheet 5 of 6)

https://truckmanualshub.com/

	COMPONENTS	NUMBER/TYPE LUBE POINTS	CAPACITY	LUBE	INTERVAL HOURS 3 MONTHS 150 HRS	6 MONTHS 300 HRS	1 YEAR 600 HRS	2 YEAR 1200 HRS	COMMENTS
LUBRICATION:									
1	Swing Bearing	1 Grease Fitting	A/R	BG/MPG	✓				BG will have a longer service interval than MPG.
2	Swing Bearing - Gear - Teeth *	1 Grease Fitting	A/R	OG	✓				OG Open Gear Spray Lubricant
3	Swing Worm Gear - Bearing	Plug	A/R	BG/MPG				✓	BG will have a longer service interval than MPG.
4	Hydraulic Fluid (Oil)	Fill Cap	4.0 Gals Tank 4.8 Gals System	HO				✓	Check oil every 10 hours of operation. Change oil every 1200 hours of operation.
5	Hydraulic Filter	N/A	N/A	N/A		✓			Replace filter element after first 50 hours and every 300 hours thereafter.
6	Wheel Drive Hub	Fill Plug/Half Full	17 OZ. (1/2 Full)	EPGL	✓				Check oil level at side plug on hub.
7	Wheel Bearing	Repack	A/R	MPG				✓	
8	Spindles/Bushing	N/A	A/R	LL	At spindle/bushing replacement.				Coat I.D. of bushings prior to installing king pins.
9	Boom Pivot Pins/Bushing	N/A	A/R	LL	At boom pivot pins/bushing replacement.				Coat I.D. of bushings prior to installing pins.
10	Rotator Hydraulic Tank	Fill Cap	1 Quart.	HO				✓	Check oil every 10 hours of operation. Change oil every 1200 hours of operation.

NOTE:

Lubrication intervals are based on machine operation under normal conditions. For machines used in multi shift operations and/or exposed to hostile environments or conditions, lubrication frequencies must be increased accordingly.

* If necessary install grease fittings into worm gear housing and grease bearings. Read CAUTION on diagram before greasing.

KEY TO LUBRICANTS:

BG - Mobilith SHC 460 Bearing Grease.
EPGL - Extreme Pressure Gear Lube.
HO - Hydraulic Oil - Modilfluid 424
LL - Synthetic Lithium Lubricant (Gredag 741 Grease).
MPG - Multi-Purpose Grease.
OG - Open Gear Lube (Mobiltac 375NC Spray)

Property of American Airlines

Figure 2-4. Lubrication Chart - 40/n40/45 electric. (Sheet 6 of 6)

SIZE	THD	BOLT DIA. (IN.)	THREAD STRESS AREA (SQ. IN.)	VALUES FOR ZINC PLATED BOLTS ONLY										UNPLATED CAP SCREWS	
				SAE GRADE 5 BOLTS & GRADE 2 NUTS					SAE GRADE 8 BOLTS & GRADE 8 NUTS					UNBRAKO 1960 SERIES SOCKET HEAD CAP SCREW WITH LOC-WEL PATCH	
				CLAMP LOAD (LB.)	TORQUE (DRY OR LOC. 263)	TORQUE (LUB.)	TORQUE (LOCTITE 262)	TORQUE (LOCTITE 242 OR 271)	CLAMP LOAD (LB.)	TORQUE (DRY OR LOC. 263)	TORQUE (LUB.)	TORQUE (LOCTITE 262)	TORQUE (LOCTITE 242 OR 271)	CLAMP LOAD (LB.)	TORQUE (as received)
					LB. IN.	LB. IN.	LB. IN.	LB. IN.		LB. IN.	LB. IN.	LB. IN.	LB. IN.		LB. FT.
4	40	0.1120	0.00604	380	8	6	—	—	540	12	9	—	—	—	—
	48		0.00661	420	9	7	—	—	600	13	10	—	—	—	—
6	32	0.1380	0.00909	580	16	12	—	—	820	23	17	—	—	—	—
	40		0.01015	610	18	13	—	—	920	25	19	—	—	—	—
8	32	0.1640	0.01400	900	30	22	—	—	1260	41	31	—	—	—	—
	36		0.01474	940	31	23	—	—	1320	43	32	—	—	—	—
10	24	0.1900	0.01750	1120	43	32	—	—	1580	60	45	—	—	—	—
	32		0.02000	1285	49	36	—	—	1800	68	51	—	—	—	—
1/4	20	0.2500	0.0318	2020	96	75	—	105	2860	144	108	—	160	3180	13
	28		0.0364	2320	120	86	—	135	3280	168	120	—	185	3640	14
					LB. FT.	LB. FT.	LB. FT.	LB. FT.		LB. FT.	LB. FT.	LB. FT.	LB. FT.		
5/16	18	0.3125	0.0524	3340	17	13	16	19	4720	25	18	22	30	5240	25
	24		0.0580	3700	19	14	17	21	5220	25	20	25	30	5800	27
3/8	16	0.3750	0.0775	4940	30	23	28	35	7000	45	35	40	50	7750	45
	24		0.0878	5600	35	25	32	40	7900	50	35	45	55	8780	50
7/16	14	0.4375	0.1063	6800	50	35	45	55	9550	70	55	63	80	10630	70
	20		0.1187	7550	55	40	50	60	10700	80	60	70	90	11870	75
1/2	13	0.5000	0.1419	9050	75	55	68	85	12750	110	80	96	120	14190	110
	20		0.1599	10700	90	65	80	100	14400	120	90	108	135	15990	115
9/16	12	0.5625	0.1820	11600	110	80	98	120	16400	150	110	139	165	18200	155
	18		0.2030	12950	120	90	109	135	18250	170	130	154	190	20300	165
5/8	11	0.6250	0.2260	14400	150	110	135	165	20350	220	170	180	240	22600	210
	18		0.2560	16300	170	130	153	190	23000	240	180	204	265	25600	220
3/4	10	0.7500	0.3340	21300	260	200	240	285	30100	380	280	301	420	33400	365
	16		0.3730	23800	300	220	268	330	33600	420	320	336	465	37300	400
7/8	9	0.8750	0.4620	29400	430	320	386	475	41600	600	460	485	660	46200	585
	14		0.5090	32400	470	350	425	520	45800	660	500	534	725	50900	635
1	8	1.000	0.6060	38600	640	480	579	675	51500	900	680	687	990	60600	865
	12		0.6630	42200	700	530	633	735	59700	1000	740	796	1100	66300	915
1-1/8	7	1.1250	0.7630	42300	800	600	714	840	68700	1280	960	1030	1400	76300	1240
	12		0.8560	47500	880	660	802	925	77000	1440	1080	1155	1575	85600	1380
1-1/4	7	1.2500	0.9690	53800	1120	840	1009	1175	87200	1820	1360	1453	2000	96900	1750
	12		1.0730	59600	1240	920	1118	1300	96600	2000	1500	1610	2200	107300	1880
1-1/2	6	1.500	1.1550	64100	1460	1100	1322	1525	104000	2380	1780	1907	2625	115500	2320
	12		1.3150	73000	1680	1260	1506	1750	118100	2720	2040	2165	3000	131500	2440
1-1/2	6	1.500	1.4050	78000	1940	1460	1755	2025	126500	3160	2360	2530	3475	140500	3040
	12		1.5800	87700	2200	1640	1974	2300	142200	3560	2660	2844	3925	158000	3270

Note: These torque values do not apply to cadium plated fasteners.

SAE GRADE 5

SAE GRADE 8

Figure 2-5. Torque Chart.

Property of Aerial Lifts Inc

https://truckmanualshub.com/

THIS PAGE LEFT BLANK INTENTIONALLY

Property of American Airlines

https://truckmanualshub.com/

SECTION 3. USER RESPONSIBILITIES AND MACHINE CONTROLS

3.1 GENERAL.

IMPORTANT

SINCE THE MANUFACTURER HAS NO DIRECT CONTROL OVER MACHINE APPLICATION AND OPERATION, CONFORMANCE WITH GOOD SAFETY PRACTICES IN THESE AREAS IS THE RESPONSIBILITY OF THE USER AND HIS/HER OPERATING PERSONNEL.

This section provides the necessary information needed to understand control functions. Included in this section are the operating characteristics and limitations, and functions and purposes of controls and indicators. It is important that the user read and understand the proper procedures before operating the machine. These procedures will aid in obtaining optimum lift service and safe operation.

3.2 PERSONNEL TRAINING.

The aerial platform is a personnel handling device; therefore, it is essential that it be operated and maintained only by authorized and qualified personnel who have demonstrated that they understand the proper use and maintenance of the machine. It is important that all personnel who are assigned to and are responsible for the operation and maintenance of the machine undergo a thorough training program and check out period in order to become familiar with the characteristics prior to operating the machine.

In addition, personnel operating the machine should be familiar with ANSI standard A92.5-1992 Responsibilities Section. This outlines the responsibilities of the owners, users, operators, lessors and lessees concerning safety, training, inspection, maintenance, application and operation.

Persons under the influence of drugs or alcohol or who are subject to seizures, dizziness or loss of physical control must not be permitted to operate the machine.

Operator Training.

Operator training must include instruction in the following areas:

1. Use and limitations of the platform controls, ground controls, emergency controls and safety systems.
2. Knowledge and understanding of this manual and of the control markings, instructions and warnings on the machine itself.
3. Knowledge and understanding of all safety work rules of the employer and of Federal, State and local statutes, including training in the recognition and avoidance of potential hazards in the work place; with particular attention to the work to be performed.
4. Proper use of all required personnel safety equipment, in particular the wearing of a safety harness or other approved fall protection devices with a lanyard attached to a designated attach point, on the platform, at all times.
5. Sufficient knowledge of the mechanical operation of the machine to recognize a malfunction or potential malfunction.
6. The safest means to operate the machine where overhead obstructions, other moving equipment, and obstacles, depressions, holes, dropoffs, etc. on the supporting surface exist.
7. Means to avoid the hazards of unprotected electrical conductors.
8. Any other requirements of a specific job or machine application.

Training Supervision.

Training must be done under the supervision of a qualified person in an open area free of obstructions until the trainee has developed the ability to safely control a machine in congested work locations.

Operator Responsibility.

The operator must be instructed that he/she has the responsibility and authority to shut down the machine in case of a malfunction or other unsafe condition of either the machine or the job site and to request further information from his/her supervisor or an authorized JLG Distributor before proceeding.

NOTE: *Manufacturer or Distributor will provide qualified persons for training assistance with first unit(s) delivered and thereafter as requested by the user or his/her personnel.*

Property of American Airlines

https://truckmanualshub.com/

3.3 OPERATING CHARACTERISTICS AND LIMITATIONS.

General.

A thorough knowledge of the operating characteristics and limitations of the machine is always the first requirement for any user, regardless of the users experience with similar types of equipment.

Placards.

Important points to remember during operation are provided at the control stations by DANGER, WARNING, CAUTION, IMPORTANT and INSTRUCTION placards. This information is placed at various locations for the express purpose of alerting personnel of potential hazards constituted by the operating characteristics and load limitations of the machine. See FOREWORD for definitions of the above placards.

Capacities.

Raising boom above horizontal with or without any load in platform, is based on the following criteria:

1. Machine is positioned on a smooth, firm and level surface.
2. Load is within manufacturers rated design capacity.
3. All machine systems are functioning properly.
4. Proper tire pressure.
5. Machine is as originally equipped from JLG.

Stability.

This machine as originally manufactured by JLG Industries, Inc., when operated within its rated capacity on a smooth, firm and level supporting surface and in accordance with the instructions provided on the machine and in this manual, provides a stable machine for all positions.

Machine stability is based on two (2) conditions which are called FORWARD stability and BACKWARD stability. The machine's position of least FORWARD stability is shown in Figure 3-1 and its position of least BACKWARD stability is shown in Figure 3-2.

⚠ WARNING

TO AVOID FORWARD OR BACKWARD UPSET, DO NOT OVERLOAD MACHINE, OPERATE ON OUT-OF-LEVEL SURFACE OR OPERATE WITH THE BOOM UPRIGHT TILTING. (SEE FIGURE 4-2. UPRIGHT POSITIONING).

3.4 CONTROLS AND INDICATORS.

These machines are equipped with control panels that use symbols and words to indicate control functions. On some machines, the control panels may use symbols only. Refer to Table 3-1 for these symbols and their corresponding functions.

Ground Control Station. (Figure 3-3)

⚠ WARNING

DO NOT OPERATE FROM GROUND CONTROL STATION WITH PERSONNEL IN THE PLATFORM EXCEPT IN AN EMERGENCY.

PERFORM AS MANY PRE-OPERATIONAL CHECK AND INSPECTIONS FROM GROUND CONTROLS AS POSSIBLE.

NOTE: *When machine is shut down the Platform/Ground Select switch and Emergency Stop must be positioned to OFF.*

1. Power/Emergency Stop Switch.

A two-position red mushroom shaped switch furnishes power to PLATFORM/GROUND SELECT switch when pulled out (on). When pushed in (off), power is shut off to the PLATFORM/GROUND SELECT switch.

2. Platform/Ground Select Switch.

A three position, key operated switch supplies power to the platform control console when positioned to PLATFORM. With the switch key held in the GROUND position, power is shut off to platform and only ground controls are operable. When released from GROUND position the switch spring returns to the (off) position.

NOTE: *With PLATFORM/GROUND SELECT switch in the center position, power is shut off to controls at both operating stations.*

Property of American Airlines

https://truckmanualshub.com/

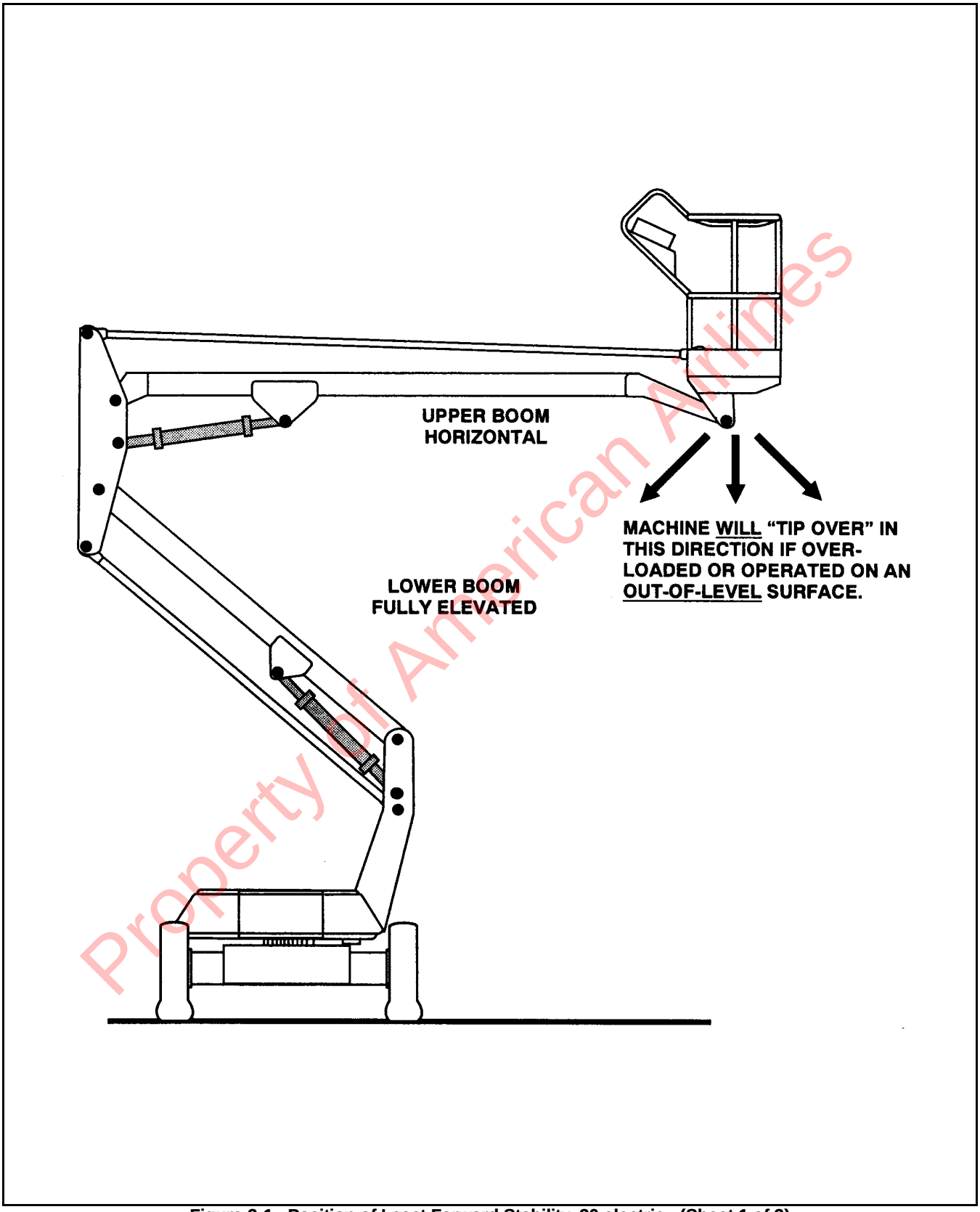

Property of American Airlines

Figure 3-1. Position of Least Forward Stability, 30 electric. (Sheet 1 of 3)

https://truckmanualshub.com/

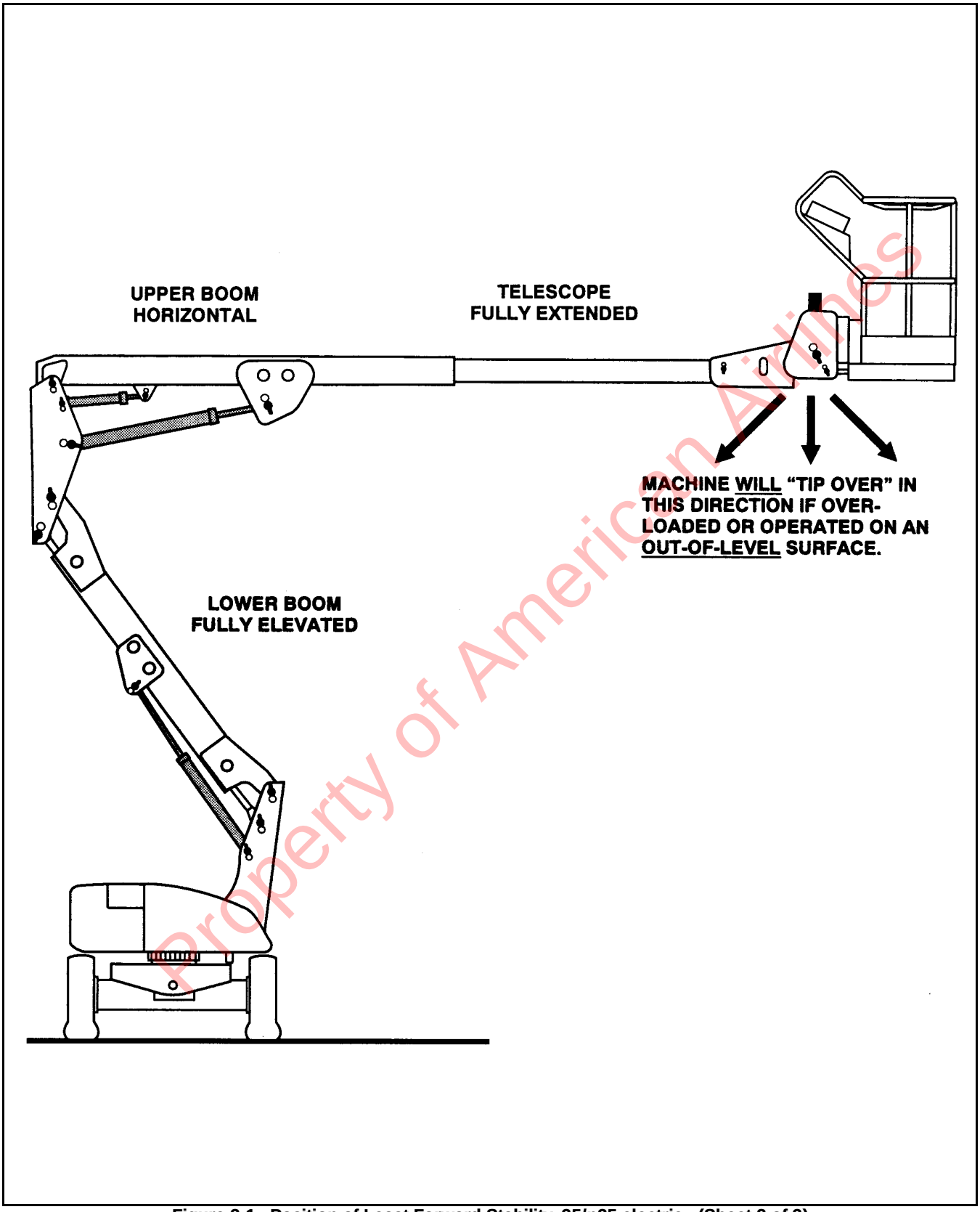

Property of American Airlines

Figure 3-1. Position of Least Forward Stability, 35/n35 electric. (Sheet 2 of 3)

https://truckmanualshub.com/

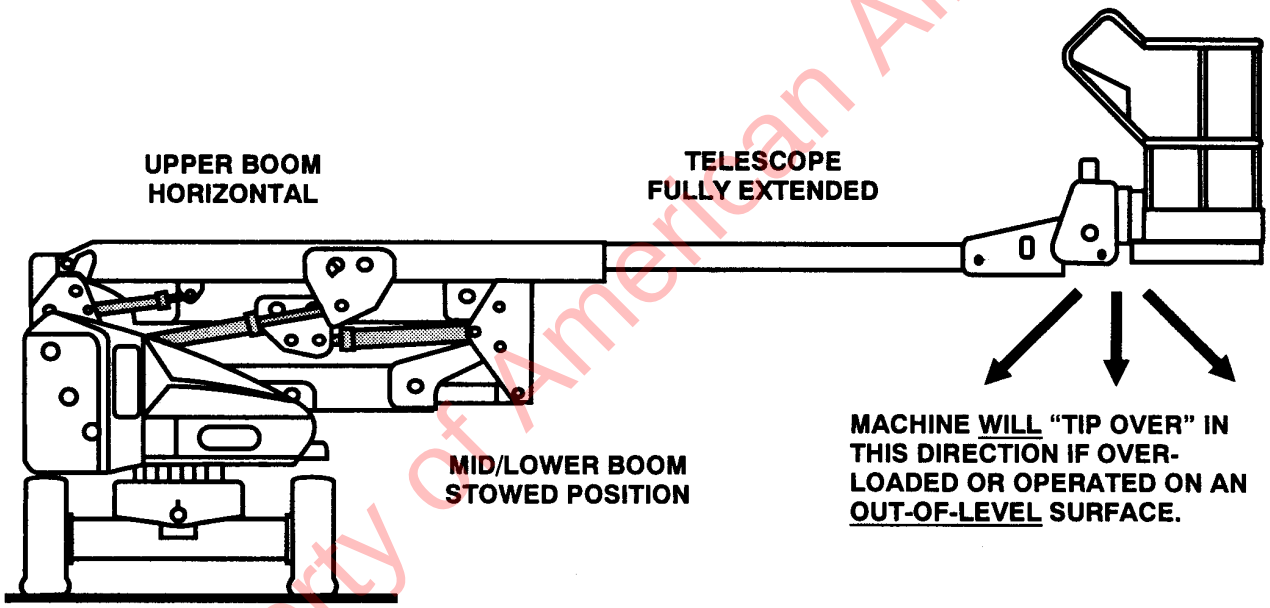

Property of American Airlines

Figure 3-1. Position of Least Forward Stability, 40/n40/45 electric. (Sheet 3 of 3)

https://truckmanualshub.com/

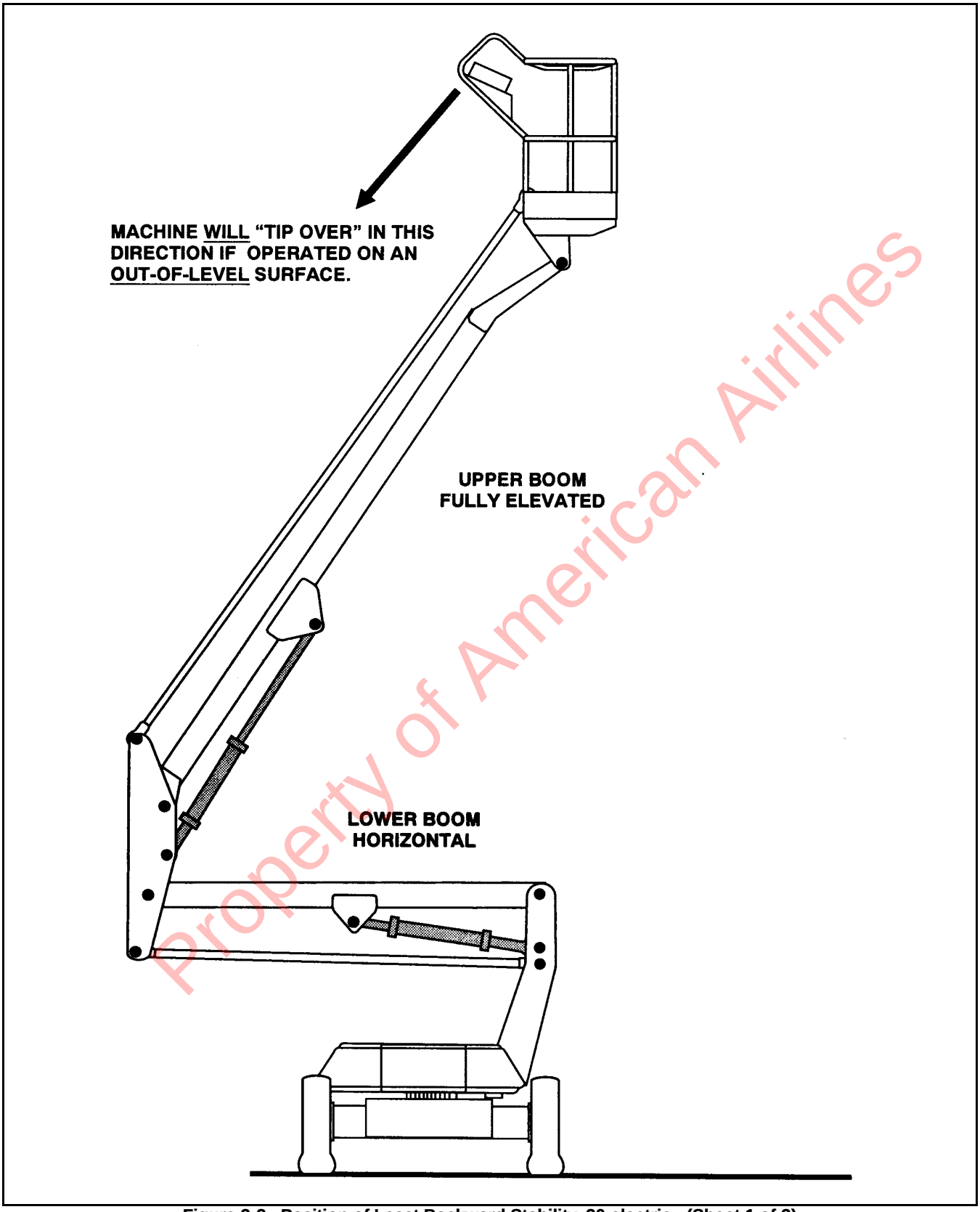

Property of American Airlines

Figure 3-2. Position of Least Backward Stability, 30 electric. (Sheet 1 of 3)

https://truckmanualshub.com/

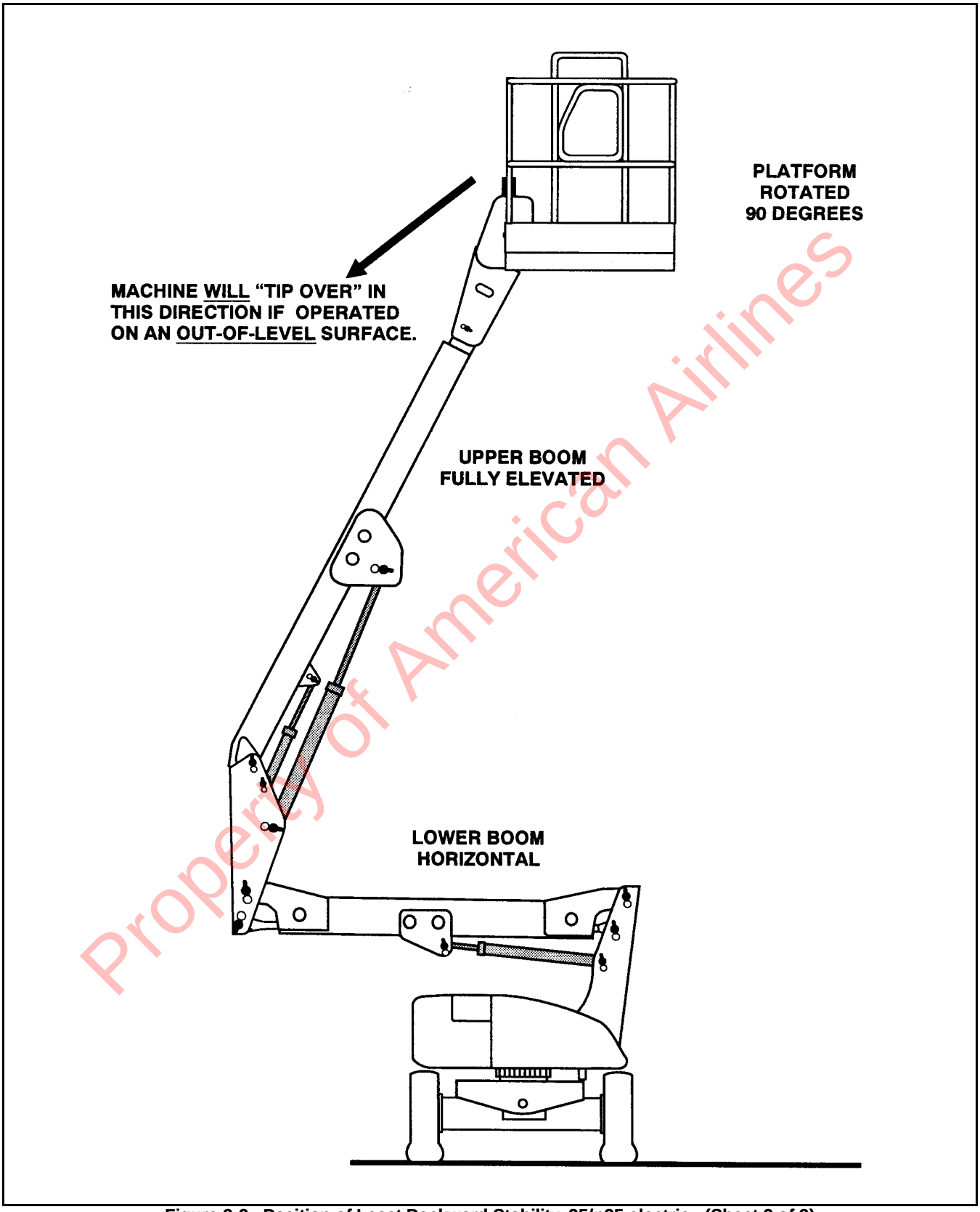

Property of American Airlines

Figure 3-2. Position of Least Backward Stability, 35/n35 electric. (Sheet 2 of 3)

https://truckmanualshub.com/

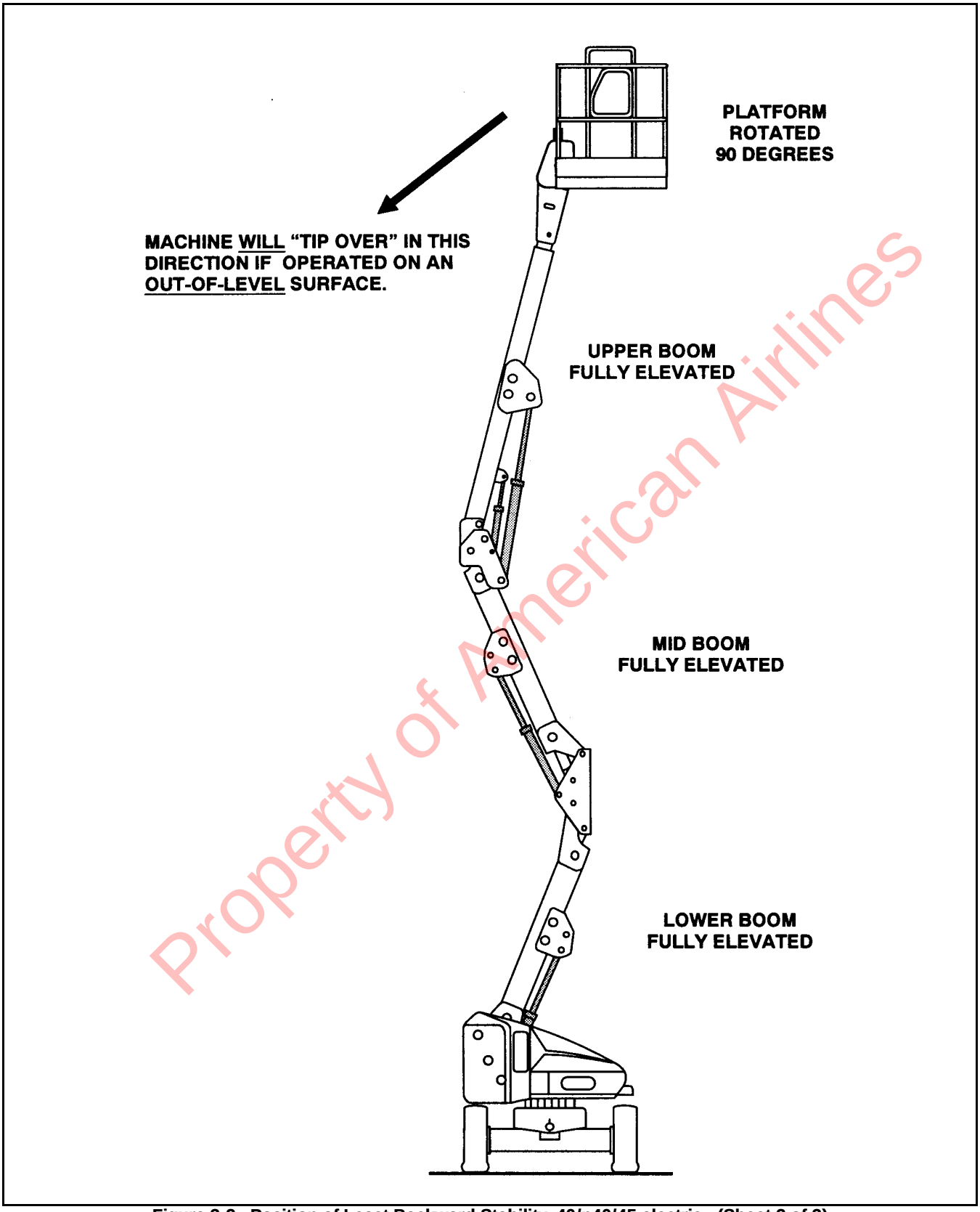

Property of American Airlines

Figure 3-2. Position of Least Backward Stability, 40/n40/45 electric. (Sheet 3 of 3)

https://truckmanualshub.com/

3. Rotate. (35/n35/40/n40/45 electric)

A three position ROTATE control switch permits rotation of the platform when positioned to left or right.

4. Platform Leveling Override. (35/n35/40/n40/45 electric)

A three position LEVEL control switch allows the operator to compensate for any difference in the automatic self leveling system by positioning the control switch to UP or DOWN.

5. Lower Boom Lift.

Provides for raising and lowering of Lower Boom and (Mid Boom on 40/n40/45 electric) when positioned to UP or DOWN.

6. Upper Boom Lift.

Provides for raising and lowering of Upper Boom when positioned to UP or DOWN.

7. Telescope. (35/n35/40/n40/45 electric)

Provides for extension and retraction of Upper Boom when positioned to IN or OUT.

8. Swing.

The SWING control switch provides 360 degrees non-continuous turntable rotation. To activate SWING, position switch to LEFT or RIGHT.

9. Circuit Breakers. (March 1995 to Present)

The circuit breakers open (pop out) to indicate a short or overload somewhere on the machine.

10. Battery Indicator and Hourmeter .

An hourmeter, installed in the upper portion of the Ground Control Box, registers the amount of machine operating time. The hourmeter registers up to 9,999.9 hours and cannot be reset.

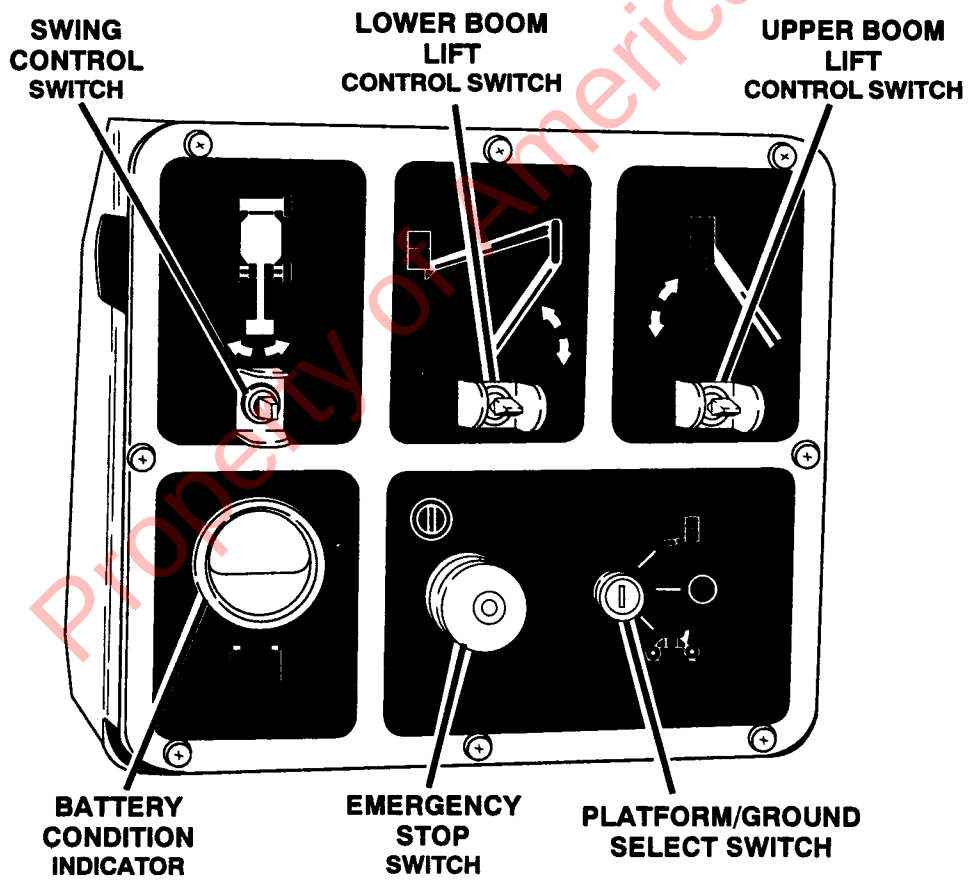

Figure 3-3. Ground Control Station, 30 electric. (Sheet 1 0f 4)

Property of American Airlines

https://truckmanualshub.com/

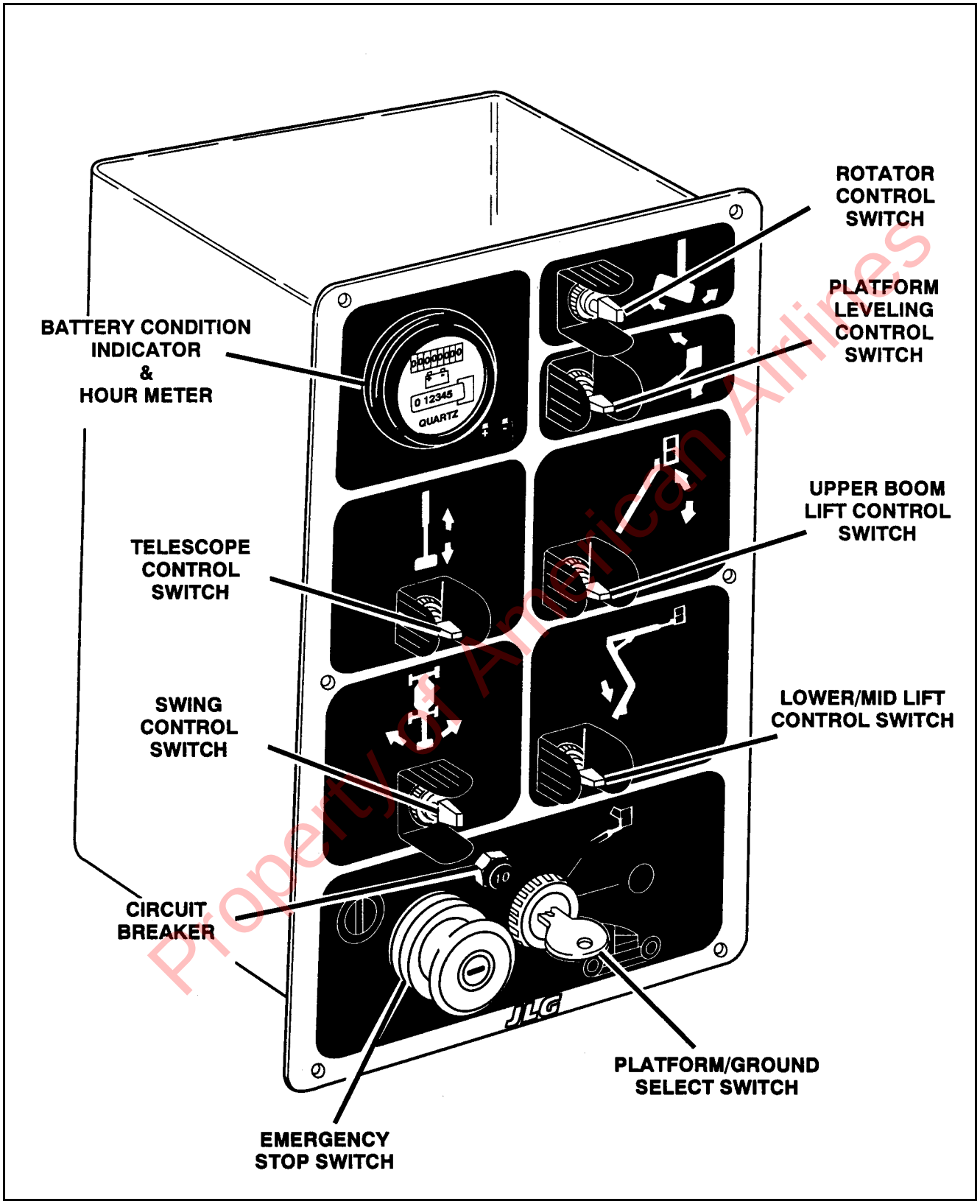

Property of American Airlines

Figure 3-3. Ground Control Station, 35/n35/40/n40/45 electric. (Sheet 2 of 2)

https://truckmanualshub.com/

Platform Control Station. (See Figure 3-4)

1. **Footswitch.**

   A safety feature, the footswitch must be depressed before boom, drive or steer functions will operate.

WARNING

TO AVOID SERIOUS INJURY, DO NOT REMOVE, MODIFY OR DISABLE THE FOOTSWITCH BY BLOCKING OR ANY OTHER MEANS.

IMPORTANT

FOOTSWITCH MUST BE DEPRESSED PRIOR TO ACTIVATING ANY FUNCTION CONTROL, OTHERWISE THE FUNCTION WILL NOT OPERATE.

WARNING

FOOTSWITCH MUST BE ADJUSTED SO THAT FUNCTIONS WILL OPERATE WHEN PEDAL IS APPROXIMATELY AT ITS CENTER OF TRAVEL. IF SWITCH OPERATES WITHIN LAST 1/4" OF TRAVEL, TOP OR BOTTOM, IT SHOULD BE ADJUSTED.

2. **Power/Emergency Stop.**

   A two-position red mushroom shaped switch furnishes power to PLATFORM Controls when pulled out (on). When pushed in (off), power is shut off to the platform functions.

3. **Lower Boom Lift.**

   Provides for raising and lowering of Lower and (Mid Boom 40/n40/45 electric) when positioned to UP or DOWN.

4. **Upper Boom Lift.**

   Provides for raising and lowering of Upper Boom when positioned to UP or DOWN.

5. **Telescope Control. (35/n35/40/n40/45 electric)**

   The TELESCOPE control switch affords extension and retraction of the main boom when positioned to IN or OUT.

6. **Swing.**

   The SWING control switch provides 360 degrees non-continuous turntable rotation. To activate SWING, position switch to LEFT or RIGHT.

NOTE: *When Lift or Swing is being operated, Drive will not function.*

7. **Drive/Steer.**

   The DRIVE controller provides for driving either forward or backward when positioned to FORWARD or REVERSE. The controller is 'ramped' to allow infinitely variable drive speed between fast and slow.

   Positioning the steer control thumb operated switch RIGHT or LEFT enables steering the machine to the right or left respectively.

NOTE: *When lower boom is raised above horizontal, or the upper boom is raised approximately 16 inches (40.64 cm) above boom rest, the high drive function will automatically switch to low drive. This also occurs when Function Speed Control is clicked on creep.*

NOTE: *DRIVE control lever is spring-loaded and will automatically return to neutral (OFF) position when released.*

NOTE: *When Drive is being operated, Lift and Swing will not function.*

NOTE: *Lift and Swing will continue to operate when Steer is activated.*

8. **Platform Leveling Override. (35/n35/40/n40/45 electric)**

   The PLATFORM LEVEL control switch allows the operator to adjust the level or the platform by position ing the switch to UP or DOWN.

Property of American Airlines

https://truckmanualshub.com/

9. Platform Rotate. (35/n35/40/n40/45 electric)

The PLATFORM ROTATE control switch allows the operator to rotate the basket to the left or right when positioned to the desired direction.

10. Function Speed Control.

Adjusts speed of Boom and Swing Functions. Rotate CCW for slower speed and CW for faster speed. Adjust Drive Function to creep. Rotate CCW until the Function Control knob clicks.

11. Machine Out Of Level.

This red illuminator indicates that the chassis is on a slope (over 5 degrees). If the boom is above horizontal and the machine is on a 5 degree slope, an alarm will sound and CREEP is automatically activated.

12. Horn.

A push-type HORN switch supplies electrical power to an audible warning device when pressed.

13. Circuit Breakers.

The circuit breakers open (pop out) to indicate a short or overload somewhere on the machine.

14. 110 Volt AC Outlet.

This feature allows electrical power to be supplied to the platform. Plug an extension cord into a grounded 110 VAC outlet and then into the plug on the right side of the hood. Power will now be supplied to the outlet in the basket to run portable electric tools, lights, etc.

⚠ WARNING

TO AVOID SERIOUS INJURY, DO NOT OPERATE MACHINE IF ANY CONTROL LEVERS OR TOGGLE SWITCHES CONTROLLING PLATFORM MOVEMENT DO NOT RETURN TO THE OFF POSITION WHEN RELEASED.

Property of American Airlines

https://truckmanualshub.com/

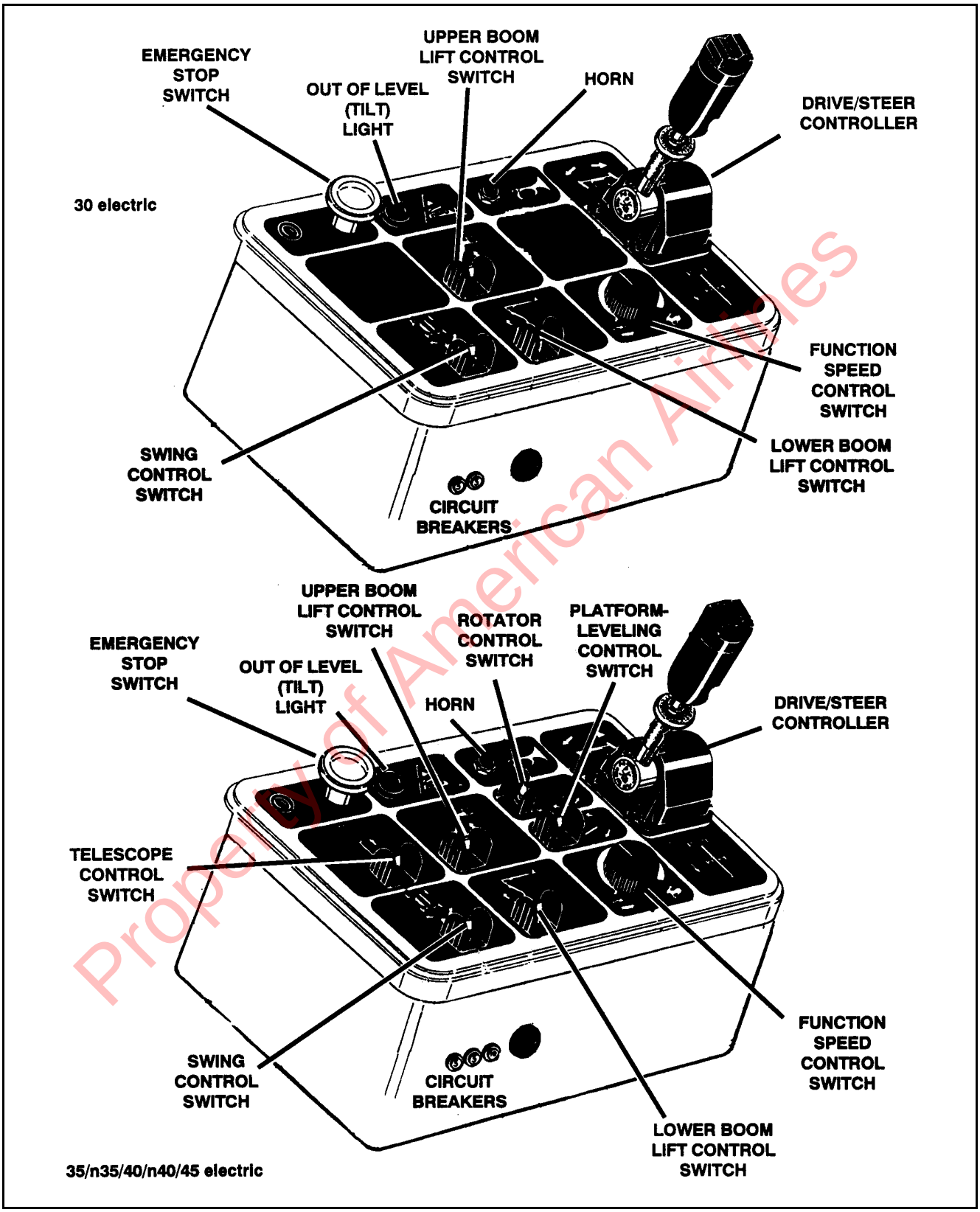

Property of American Airlines

Figure 3-4. Platform Control Console.

https://truckmanualshub.com/

Table 3-1. Control Panel Symbols. (Sheet 1 of 3)

FUNCTION	SYMBOL	FUNCTION	SYMBOL
BATTERY CHARGING		EXPLOSION HAZARD	
CAUTION	CAUTION	FACTORY MUTUAL	FM APPROVED
SAFETY ALERT		FAST	
CHASSIS OUT OF LEVEL		NO FEET	
CIRCUIT BREAKER		FUNCTION CONTROL	
CREEP		GROUND CONTROL	
CRUSHING		HAND CRUSHING HAZARD	
DANGER	DANGER	HORN	
DRIVE		HYDRAULIC OIL	
ELECTRICAL HAZARD		HYDRAULIC OIL LEVEL (LOW)	
EMERGENCY SHUT OFF		HYDRAULIC OIL LEVEL (HIGH)	

Property of American Airlines

https://truckmanualshub.com/

Control Panel Symbols. (Sheet 2 of 3)

FUNCTION	SYMBOL	FUNCTION	SYMBOL
POWER/ EMERGENCY STOP		NO LIFT	
IMPORTANT	IMPORTANT	PLATFORM CONTROL	
LOWER BOOM LIFT (30 electric)		PLATFORM LEVEL (35/n35/40/n40/45 electric)	
LOWER BOOM LIFT (35/n35/40/n40/45 electric)		PLATFORM ROTATOR (35/n35/40/n40/45 electric)	
MANUAL		SLOW	
MANUAL DESCENT KNOB		STEER	
MANUAL DESCENT PUMP HANDLE		SWING	
MANUAL SWING		TELESCOPE (35/n35/40/n40/45 electric)	
MASTER SWITCH		LIFT	
MASTER SWITCH OFF		TIE DOWN	
MAXIMUM WIND SPEED		"UL" DOUBLE E RATED	EE

Property of American Airlines

https://truckmanualshub.com/

Control Panel Symbols. (Sheet 3 of 3)

FUNCTION	SYMBOL	FUNCTION	SYMBOL
UPPER BOOM LIFT (30 electric)	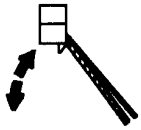	WARNING	
UPPER BOOM LIFT (35/n35/40/n40/45 electric)			

Property of American Airlines

https://truckmanualshub.com/

SECTION 4. MACHINE OPERATION

4.1 DESCRIPTION.

This JLG Lift is EE Rated and Certified By Underwriters Laboratories.

This machine is a self-propelled hydraulic lift equipped with a work platform on the end of an elevating, articulating and rotating boom. The JLG Lift's intended purpose is to position personnel with their tools and supplies at positions above ground level, and can be used to reach work areas located above machinery or equipment.

The JLG Lift has a primary operator Control Station in the platform. From this control station, the operator can drive and steer the machine in both forward and reverse directions. The operator can raise or lower the upper or lower boom or swing the boom to the left or right. Standard boom swing is 360 degree non-continuous left and right of the stowed position. The machine has a Ground Control Station which will override the Platform Control Station. Ground Controls operate Upper and Lower Boom Lift and Swing, and are to be used in an emergency to lower the platform to the ground should the operator in the platform be unable to do so. Ground Control also to be used in Pre-Operation check.

Instructions and hazard alerts are posted on the operator control stations and at other places on the machine. It is extremely important that operators know what instructions and hazard alerts are placed on the machine, and review these periodically so that they are fresh in their minds. Vibrations emitted by these machines are not hazardous to an operator in the work platform.

The JLG Lift is designed to provide efficient and safe operation when maintained and operated in accordance with warnings on the machine, in the Operators & Safety Manual, and all jobsite and government rules and regulations. As with any type of machinery, the operator is very important to efficient and safe operation. Owner/user/operator must be familiar with Sections 6, 7, 8, 9, and 10 of ANSI A92.5-1992. These sections contain the responsibilities of the owner, users, operators, lessors and lessees concerning safety, training, inspection, maintenance, application and operation. It is absolutely necessary that the JLG Lift be regularly maintained in accordance with this section and the Service and Specifications section, and that any evidence of lack of maintenance, malfunction, excessive wear, damage or modification to the machine be reported immediately to the machine owner or the jobsite supervisor or safety manager and that the machine be taken out of service until all discrepancies are corrected.

The JLG Lift is not intended to be used to lift material other than supplies which personnel in the platform require to do their job. Supplies or tools which extend outside the platform are prohibited. It must not be used as a forklift, crane, support for overhead structure, or to push or pull another object.

The JLG Lift is powered using a hydraulic pump and cylinders for various functions. The hydraulic components are controlled by electrically activated hydraulic valves using switches and control levers. The speeds of boom functions are variable from zero to maximum speed depending upon the position of the function speed control. Functions controlled by toggle switches are either on or off. A foot operated switch in the platform must be depressed before any controls will function and provides a means of emergency stop when the operators foot is removed from the footswitch.

The JLG Lift is a two wheel drive machine with drive power being supplied by an electric motor at each drive wheel. Each drive wheel is supplied with an electrically released, spring applied brake. These brakes are automatically applied any time the Drive switch is returned to neutral position.

The unrestricted capacity of the JLG Lift is 500 LBS. (227 kg). This means that with a platform load of 500 LB. (227 kg) or less, the platform may be positioned anywhere the boom will reach, with the machine on a smooth, firm, and level surface.

4.2 GENERAL.

This section provides the necessary information needed to operate the machine. Included in this section are procedures for traveling, steering, parking, platform loading and transporting. It is important that the user read and understand the proper procedures before operating the machine.

4.3 MOTOR OPERATION.

Power/Emergency Stop.

This red, mushroom-shaped switch provides battery power to the Platform/Ground Select switch, when pulled out (on), for all machine functions. The switch should be pushed in (off) when recharging the batteries or parking the machine overnight.

Property of American Airlines

https://truckmanualshub.com/

Platform/Ground Select Switch.

The Platform/Ground Select switch functions to direct battery power to the desired control station when the POWER/EMERGENCY STOP switch is pulled out (on). With the switch held in the GROUND position battery power is supplied to the ground control station. When the switch is in the PLATFORM position, battery power is supplied to the platform control station.

Motor Activation.

IMPORTANT

FOOTSWITCH MUST BE DEPRESSED PRIOR TO ACTIVATING ANY FUNCTION, OTHERWISE FUNCTION WILL NOT OPERATE.

The motor becomes activated and operates the desired function when the Emergency Stop switch is pulled out (on), the Platform/Ground select switch is in the appropriate position and the Footswitch is depressed.

CAUTION

IF A MOTOR MALFUNCTION NECESSITATES UNSCHEDULED SHUTDOWN, DETERMINE AND CORRECT CAUSE BEFORE RESUMING ANY OPERATION.

IMPORTANT

ALWAYS POSITION EMERGENCY STOP SWITCH TO THE 'OFF' POSITION (PUSHED IN) WHEN MACHINE IS NOT IN USE.

4.4 TRAVELING (DRIVING).

NOTE: *When lower boom is raised above horizontal, or the upper boom is raised approximately 16 inches (40.64 cm) above boom rest, the high drive function will automatically be in low drive.*

IMPORTANT

IF THE MACHINE IS OPERATED AT A VERY SLOW SPEED OR STALLED WHEN CLIMBING A GRADE OF 20% OR GREATER, DRIVE FUNCTION WILL STOP. REMOVE FOOT FROM FOOTSWITCH, AND DEPRESS FOOTSWITCH TO RESET.

WARNING

DO NOT DRIVE WITH BOOM ABOVE HORIZONTAL EXCEPT ON A SMOOTH, FIRM AND LEVEL SURFACE.

TO AVOID LOSS OF TRAVEL CONTROL OR "TIP OVER" ON GRADES AND SIDE SLOPES, DO NOT DRIVE MACHINE ON GRADES OR SIDE SLOPES EXCEEDING THOSE SPECIFIED ON WARNING PLACARD AT PLATFORM.

AVOID ANY TERRAIN FEATURES WHICH COULD CAUSE THE MACHINE TO TIPOVER.

USE EXTREME CAUTION WHEN DRIVING IN REVERSE AND AT ALL TIMES WHEN DRIVING WITH PLATFORM ELEVATED AND WHEN DRIVING WITH ANY PART OF MACHINE WITHIN 6 FEET OF ANY OBSTRUCTION.

CAUTION

BEFORE DRIVING, MAKE SURE BOOM IS POSITIONED OVER REAR DRIVE AXLE. IF BOOM IS OVER STEER WHEELS, STEER AND DRIVE CONTROLS WILL MOVE IN OPPOSITE DIRECTIONS TO MACHINE MOTION.

Traveling Forward and Reverse.

IMPORTANT

FOOTSWITCH MUST BE DEPRESSED PRIOR TO ACTIVATING ANY FUNCTION, OTHERWISE FUNCTION WILL NOT OPERATE.

1. If machine is shut down, pull out Emergency Stop at Ground Controls and place Platform/Ground Select switch to PLATFORM.
2. At Platform Controls, pull out Emergency Stop switch and activate footswitch.
3. Position Drive controller to FORWARD or REVERSE as desired. Angle of controller will determine travel speed.

4.5 STEERING.

Depress footswitch to steer machine, position thumb switch on Drive/Steer controller to RIGHT for steering right, or to LEFT for steering left.

Property of American Airlines

https://truckmanualshub.com/

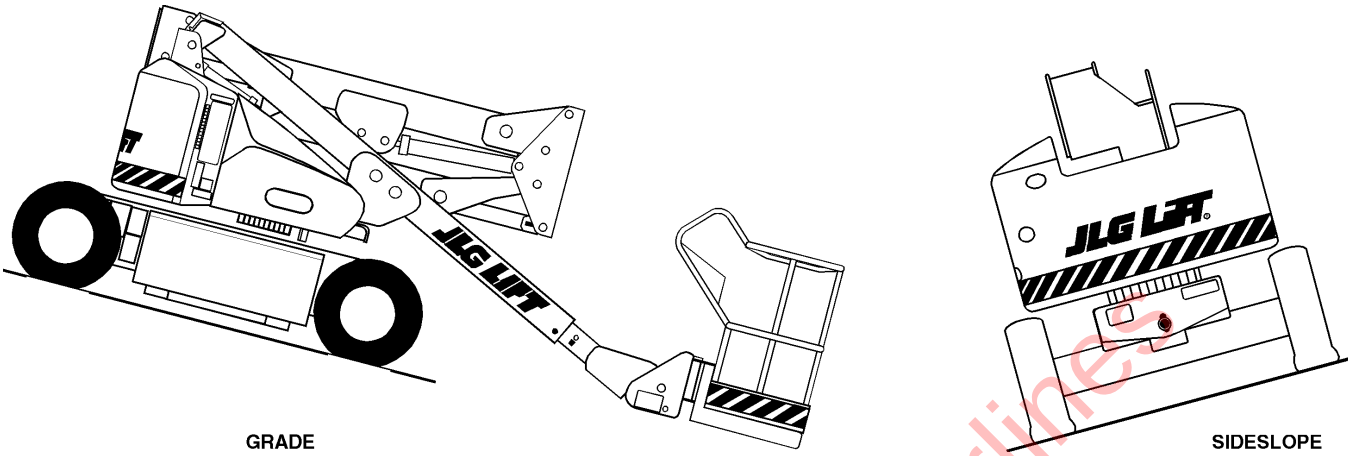

Figure 4-1. Grade and Side Slopes.

4.6 PLATFORM.

Loading From Ground Level.

1. Position chassis on a smooth, firm and level surface.

NOTE: *Telescope the boom on the MODEL 35 electric approximately 5 ft. (1.5 m) for platform access.*

2. If total load (personnel, tools and supplies) is 500 LB. (227 kg) or less, distribute load uniformly on platform floor and proceed to work position.

Loading From Positions Above Ground Level.

Before loading weight to platform above ground level:

1. Determine what the total weight will be after additional weight is loaded (personnel, tools and supplies).

2. If total weight in platform will be 500 LBS. (227 kg) or less, proceed with adding weight.

Platform Level Adjustment. (35/n35/40/n40/45/ electric)

1. Leveling UP. Depress footswitch to raise platform, position PLATFORM/LEVEL control switch UP and hold until platform is level.

2. Leveling DOWN. Depress footswitch to lower platform, position PLATFORM/LEVEL control switch to DOWN and hold until platform is level.

Platform Rotation. (35/n35/40/n40/45 electric)

1. Depress footswitch to rotate platform to the left, PLATFORM ROTATE control switch is positioned to the LEFT and held until desired position is reached.

2. Depress footswitch to rotate platform to the right, PLATFORM ROTATE control switch is positioned to the RIGHT and held until desired position is reached.

4.7 BOOM.

⚠ WARNING

A RED TILT WARNING LIGHT IS LOCATED ON THE CONTROL CONSOLE WHICH LIGHTS WHEN THE CHASSIS IS ON A 5 DEGREE OR GREATER SLOPE. DO NOT SWING OR RAISE BOOM ABOVE HORIZONTAL WHEN LIGHT IS LIT.

DO NOT DEPEND ON TILT ALARM AS A LEVEL INDICATOR FOR THE CHASSIS. TILT ALARM INDICATES CHASSIS IS ON A SEVERE SLOPE (5 DEGREE OR GREATER). CHASSIS MUST BE LEVEL BEFORE SWINGING, OR RAISING BOOM ABOVE HORIZONTAL.

TO AVOID UPSET IF RED TILT WARNING LIGHT LIGHTS WHEN BOOM IS RAISED ABOVE HORIZONTAL, LOWER PLATFORM TO GROUND LEVEL. THEN REPOSITION MACHINE SO THAT CHASSIS IS LEVEL BEFORE RAISING BOOM.

TRAVELING WITH BOOM BELOW HORIZONTAL IS PERMITTED ON GRADES AND SIDE SLOPES SPECIFIED ON WARNING PLACARD AT PLATFORM.

TO AVOID SERIOUS INJURY, DO NOT OPERATE MACHINERY IF ANY CONTROL LEVER OR TOGGLE SWITCH CONTROLLING

Property of American Airlines

https://truckmanualshub.com/

PLATFORM MOVEMENT DOES NOT RETURN TO THE 'OFF' OR NEUTRAL POSITION WHEN RELEASED.

TO AVOID A COLLISION AND INJURY IF PLATFORM DOES NOT STOP WHEN A CONTROL SWITCH OR LEVER IS RELEASED, REMOVE FOOT FROM FOOTSWITCH OR USE EMERGENCY STOP SWITCH TO STOP THE MACHINE.

Swinging the Boom.

Depress footswitch to swing boom, with footswitch activated, position SWING control switch to RIGHT or LEFT for direction desired.

⚠ IMPORTANT

WHEN SWINGING THE BOOM MAKE SURE THERE IS AMPLE ROOM FOR THE BOOM TO CLEAR SURROUNDING WALLS, PARTITIONS AND EQUIPMENT.

NOTE: *Models 30/35/n35 electric do not have a Mid Boom.*

Raising and Lowering the Lower and Mid Boom.

Depress footswitch to raise or lower the Lower and Mid Boom, with footswitch activated, position Lower Boom Lift switch to UP or DOWN as desired.

Raising and Lowering the Upper Boom.

Depress footswitch to raise or lower the Upper Boom, with footswitch activated, position Upper Boom Lift switch to UP or DOWN until desired height is reached.

4.8 BOOM FUNCTION SPEEDS.

The Function Speed Control affects the speed of boom functions LIFT, (TELESCOPE 35/n35/40/n40/45 electric), and SWING. Turn the control CW to increase function speed or CCW to decrease function speed.

4.9 SHUT DOWN AND PARK.

NOTE: *When parking battery powered units overnight, batteries should be charged in accordance with instructions in Section 2 to ensure readiness for following workday.*

NOTE: *Electric machines are equipped with a static strap due to static electricity build-ups. Strap is located under rear of machine chassis.*

To shut down and park the machine, the procedures are as follows:

1. Drive machine to a reasonably well protected area.
2. Ensure boom is lowered over rear drive axle.
3. Shut down Emergency Stop at Platform Controls.
4. Shut down Emergency Stop at Ground Controls. Position Platform/Ground Select switch to center OFF.
5. If necessary, cover Platform Controls to protect instruction placards, warning decals and operating controls from hostile environment.

4.10 MACHINE TIE DOWN.

Chassis Tie Down (All Models). (See Figure 4-3)

When transporting machine by truck or trailer, boom must be in stowed position and machine chassis securely tied down to truck or trailer deck. Four tie down eyes are provided in the frame. As shown in figure 4-3.

Platform/Boom Tie Down (Model 30electric). (See Figure 4-3)

Place a 6" x 6" (15cm x 15cm) wooden block under platform support as shown, lower boom so the support rests on the wooden block. Secure platform by running a suitable tie down strap over the supports under platform floor and secure to truck or trailer as shown in figure 4-3. DO NOT OVERTIGHTEN OR DAMAGE WILL OCCUR TO BOOM OR PLATFORM. Secure lower boom by running a suitable tie down strap over the lower boom and under the lift cylinder as shown and secure to truck or trailer. DO NOT OVERTIGHTEN OR DAMAGE WILL OCCUR TO BOOM OR PLATFORM.

Property of American Airlines

https://truckmanualshub.com/

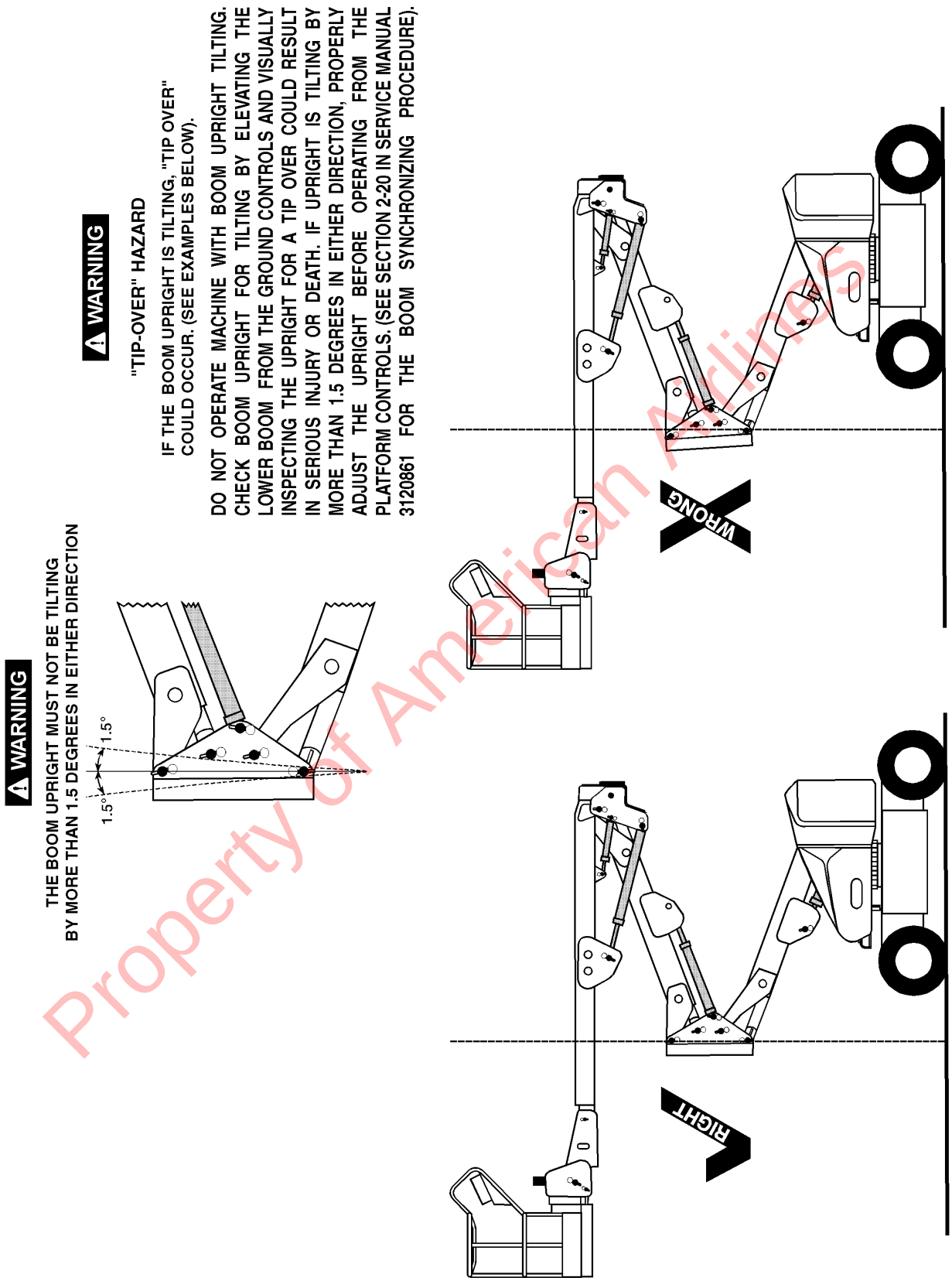

Figure 4-2. Upright Positioning Models 40e and 45e.

Property of American Airlines

https://truckmanualshub.com/

Platform/Boom Tie Down (Model 35electric). (See Figure 4-3)

Tilt platform forward all the way toward the boom and telescope fly boom section out until rotator support rests on a 6" x 6" (15cm x 15cm) wooden block. Secure platform support to truck or trailer using a suitable tie down strap as shown in figure 4-3). DO NOT OVERTIGHTEN OR DAMAGE WILL OCCUR TO BOOM OR PLATFORM.

Platform/Boom Tie Down (Model 40electric/ 45electric). (See Figure 4-3)

Tilt platform forward all the way toward the boom and telescope fly boom section out until rotator support rests on truck deck. Secure platform support to truck or trailer using a suitable tie down strap as shown in figure 4-3). DO NOT OVERTIGHTEN OR DAMAGE WILL OCCUR TO BOOM OR PLATFORM.

⚠ CAUTION

FAILURE TO TIE DOWN PLATFORM AND BOOM, AS SHOWN IN FIGURE 4-3, MAY ALLOW PLATFORM TO ELEVATE DURING TRANSPORTING.

4.11 MACHINE LIFTING.

The four lugs on the machine frame are intended for lifting the machine. When lifting the machine, attach a lifting chain to each of the four lugs, ensuring that the chains are adjusted to keep the machine level.

NOTE: *Crane and lifting devices, chains, slings, etc., must be capable of handling at least:*

30 ELECTRIC - 5,325 LB. (2415 KG.)

35 ELECTRIC - 10,000 LBS. (4536 KG.)

N35 ELECTRIC - 11,270 LB. (5112 KG.)

40 ELECTRIC - 11,350 LB. (5148 KG.)

N40 ELECTRIC - 12,250 LB. (5556 KG.)

45 ELECTRIC - 12,320 LBS. (5588 KG.)

⚠ IMPORTANT

THE ABOVE IS A MINIMUM WEIGHT. CHECK WEIGHT OF UNIT PRIOR TO LIFTING.

NOTE: *Lifting eyes are provided at the front and rear in the frame slab. Each of the four chains or slings used for lifting machine must be adjusted individually so machine remains level when elevated.*

Property of American Airlines

https://truckmanualshub.com/

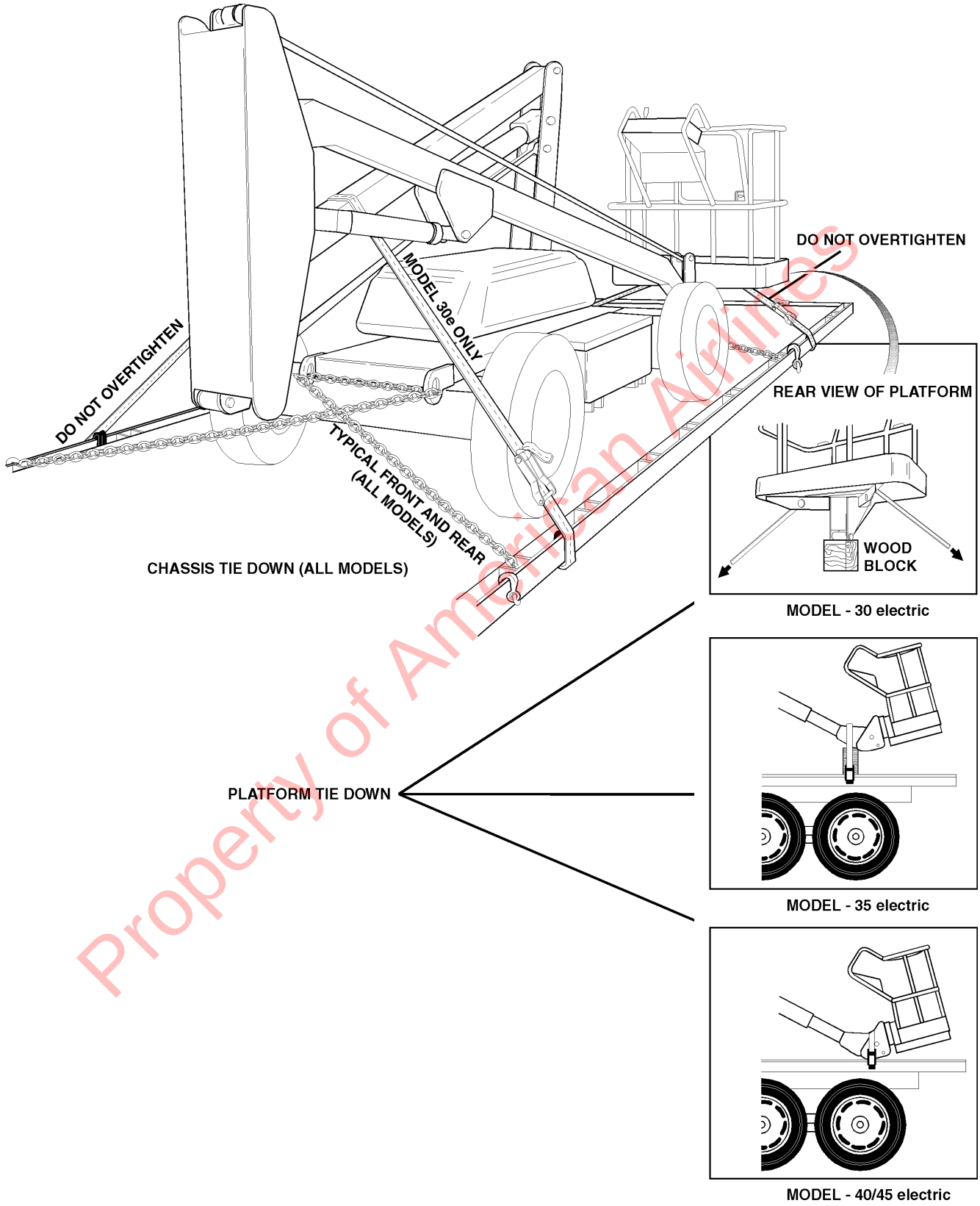

Property of American Airlines

Figure 4-3. Chassis & Platform Tie Down. (All Models)

https://truckmanualshub.com/

MODELS	"A" Dimension Steer Axle To Center of Gravity	Installation Tire Type	Gross Weight Standard Machine
30electric	35.3 inches (896.62 mm)	Foam	5,100 lbs (2313.36 kg)
35electric	32.2 inches (817.88 mm)	Foam	10,300 lbs (4672.08 kg)
n35electric	32.2 inches (817.88 mm)	Solid	10,750 lbs (4876.20 kg)
40electric	40.9 inches (1038.86 mm)	Foam	11,150 lbs (5057.64 kg)
n40electric	40.8 inches (1036.32 mm)	Solid	11,690 lbs (5302.58 kg)
45electric	43.5 inches (1104.90 mm)	Air	12,580 lbs (5706.29 kg)

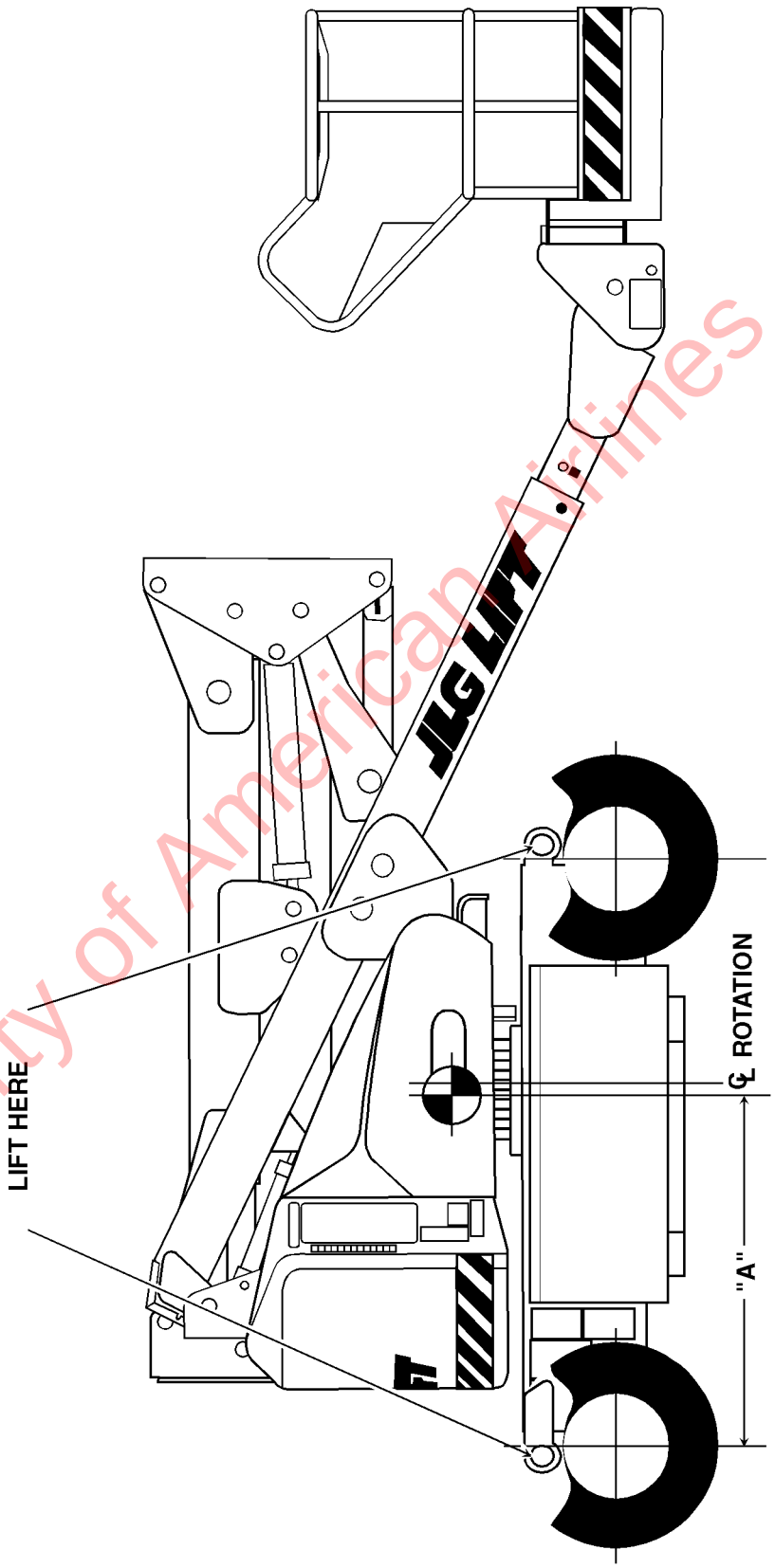

Property of American Airlines

Figure 4-4. Lifting Chart.

https://truckmanualshub.com/

SECTION 5. OPTIONAL EQUIPMENT

IMPORTANT

WHEN ADDING AN ELECTRICAL OR ELECTRONIC OPTION TO THE MACHINE, DO NOT GROUND THE DEVICE TO THE MACHINE CHASSIS. AN ELECTRICAL OR ELECTRONIC DEVICE THAT IS GROUNDED TO THE CHASSIS IS SEEN BY THE SEVCON AS A SHORT CIRCUIT AND WILL CAUSE A FAULT CODE TO APPEAR. GROUND ALL ELECTRICAL OR ELECTRONIC DEVICES TO THE APPROPRIATE TERMINAL OF THE SEVCON CONTROLLER.

5.1 MOTION ALARM.

A motion alarm horn provides an audible warning when the platform controls are selected at the PLATFORM/ GROUND SELECT switch, the EMERGENCY STOP switch is ON, and the footswitch is depressed. The alarm warns personnel in the jobsite area to avoid the operating machine.

5.2 FOAM FILLED TIRES.

Eliminates flats by filling tires with polyurethane foam. For use where sharp objects are frequently encountered on operating surface of jobsite.

5.3 NON-MARKING TIRES.

For indoor use, these tires are made from a special compound that, unlike regular tires, will not leave black skid marks on floors and other surfaces.

5.4 ROTATING BEACON.

An amber rotating beacon may be installed on the machine hood, and is activated whenever platform controls are selected at the PLATFORM/GROUND SELECT switch. When activated, the light provides a visual warning of the machine's operation.

5.5 TILT ALARM.

An audible warning horn that will sound when the machine is out of level five degrees in any direction with the boom raised above horizontal.

5.6 WHEEL COVERS.

Provide protection for wheels and wheel bearings from dirt, grease, mud, rocks, etc.

5.7 BATTERY PACKS.

Spare battery packs are available to enable the operator to remove battery packs for charging and replace them with fresh battery packs to keep machine operating with minimal down time. Battery packs are interchangeable and include applicable cables and connectors for "plug-in" use.

5.8 PLATFORM LIGHTS.

Platform lights may be installed on the machine platform rails, to provide more lighting for the operator.

5.9 CONTROL CONSOLE COVER.

The control console cover is a one piece clear acrylic cover which attaches to the platform rails over the control console. The cover, when in position, will protect the entire platform control console and the control handle on the right side of the console.

5.10 CYLINDER BELLOWS.

A one piece accordion shaped rubber bellows may be attached to the rod end of the cylinder barrel and the cylinder rod as close to the rod attach bushing as possible. The bellows affords protection to the cylinder rod in either the extended or retracted position. The bellows are installed on the lift cylinders, slave cylinder, master cylinder, and steer cylinder.

5.11 STEEL HOOD COVERS. (30 ELECTRIC)

The steel covers are positioned over the hood and battery box lids to protect the Fiberglass hood and battery box lids from damage.

5.12 WORK PLATFORM. (35/40/N40/45 ELECTRIC)

These machines are available with a 26 in. x 60 in. (.66 x1.52M) size platform.

5.13 SIMULTANEOUS DRIVE / LIFT / STEER. (N40/40/45 ELECTRIC)

Provides for machines with multifunction performance simultaneously.

Property of American Airlines

https://truckmanualshub.com/

ITHIS PAGE LEFT BLANK INTENTIONALLY

Property of American Airlines

https://truckmanualshub.com/

SECTION 6. EMERGENCY PROCEDURES

6.1 GENERAL.

This section provides information on the procedures to be followed and on the systems and controls to be used in the event an emergency situation is encountered during machine operation. Prior to operation of the machine and periodically thereafter, the entire operating manual, including this section, should be reviewed by all personnel whose responsibilities include any work or contact with the machine.

6.2 EMERGENCY TOWING PROCEDURES.

Towing this machine is prohibited. However, provisions for moving the machine have been incorporated. The following procedures are to be used ONLY for emergency movement to a suitable maintenance area.

1. Chock wheels securely.
2. Engage the mechanical release on both drive brakes by loosening, completely reversing, and tightening the three nuts on each brake.
3. Connect suitable equipment, remove chocks, and move machine.

After moving machine, complete the following procedure:

3. Position machine on a firm level surface.
4. Chock wheels securely.
5. Disengage the mechanical release on both drive brakes by loosening, completely reversing, and tightening the three nuts on each brake.
6. Remove chocks from wheels as desired.

6.3 EMERGENCY CONTROLS AND THEIR LOCATIONS.

Emergency Stop Switch.

There is one of these red mushroom shaped switches at either Ground Controls or Platform Controls. When depressed it will immediately stop all functions at that station and shut down the machine.

⚠ WARNING

CHECK DAILY TO MAKE SURE EMERGENCY STOP SWITCH IS FUNCTIONING AND THAT CONTROL INSTRUCTIONS ARE IN PLACE AND LEGIBLE.

Ground Control Station.

The Ground Control Station is located on the **(Right 30/35/n35 electric) - (Left 40/n40/45 electric)** side of the turntable. The controls on this panel provide the means for overriding the platform controls and for controlling boom swing and lift from the ground. The PLATFORM/GROUND SELECT SWITCH is a self-centering switch. Hold SELECT SWITCH in GROUND position and operate the desired function switch.

Manual Descent System. (30/35/n35 electric)

The manual descent system is used, in the event of total power failure, to lower the upper and lower booms using gravity. To operate the manual descent system, proceed as follows:

1. Open needle valve on lower boom lift cylinder (counterclockwise) and allow boom to lower until it stops. Control boom speed by opening and closing valve.
2. Close needle valve (clockwise) to resume normal operation.
3. Open needle valve on upper boom lift cylinder (counterclockwise) and allow boom to lower until it stops. Control boom speed by opening and closing valve.
4. Close needle valve (clockwise) to resume normal operation.

Manual Descent System. (40/n40/45 electric)

The manual descent system is used, in the event of total power failure, to lower the upper and lower booms using gravity. To operate the manual descent system, proceed as follows:

1. Locate manual descent knob on main valve and turn (counterclockwise). Install handle into manual descent pump and lower the Mid and Lower Booms by pumping the handle until they are completely lowered.
2. Turn manual descent knob (clockwise) and lower the Upper Boom by pumping the handle until it is completely lowered. Return manual descent knob to center position and stow handle in bracket provided.

Property of American Airlines

https://truckmanualshub.com/

Manual Swing Override. (30/35/40/n40/45 electric)

The manual swing override is used to manually swing boom and turntable assembly in the event of a total power failure when the platform is positioned over a structure or obstacle. To operate the manual swing override, proceed as follows:

1. Using a 7/8 inch socket and ratchet wrench, locate nut on swing worm gear on left side of machine. Install wrench on nut and ratchet in the direction desired.

6.4 EMERGENCY OPERATION.

Use of Ground Controls.

1. Know how to use Ground Controls in an emergency situation.

   Ground personnel must be thoroughly familiar with the machine operating characteristics and the ground control functions. Training should include operation of the machine, review and understanding of this section and hands-on operation of the controls in simulated emergencies.

Operator Unable to Control Machine.

IF THE PLATFORM OPERATOR IS PINNED, TRAPPED OR UNABLE TO OPERATE OR CONTROL MACHINE:

1. Operate the machine from ground controls only with the assistance of other personnel and equipment (cranes, overhead hoists, etc.) as may be required to safely remove the danger or emergency condition.
2. Other qualified personnel on the platform may use the platform controls. DO NOT CONTINUE OPERATION IF CONTROLS DO NOT FUNCTION PROPERLY.
3. Cranes, forklift trucks or other equipment which may be available are to be used to remove platform occupants and stabilize motion of the machine in case machine controls are inadequate or malfunction when used.

Platform or Boom Caught Overhead:

If the platform or boom becomes jammed or snagged in overhead structures or equipment, do not continue operation of the machine from either the platform or the ground until the operator and all personnel are safely moved to a secure location. Only then should an attempt be made to free the platform using any necessary equipment and personnel. Do not operate controls to cause one or more wheels to leave the ground.

Following any accident, thoroughly inspect the machine and test all functions first from the ground controls, then from the platform controls. Do not lift above 10 ft. (3 m) until you are sure that all damage has been repaired, if required, and that all controls are operating correctly.

6.5 INCIDENT NOTIFICATION.

It is imperative that JLG Industries, Inc. be notified immediately of any incident involving a JLG product. Even if no injury or property damage is evident, the Product Safety and Reliability Department at the factory should be contacted by telephone and provided with all necessary details.

It should be noted that failure to notify the Manufacturer of an incident involving a JLG Industries product within 48 hours of such an occurrence may void any warranty consideration on that particular machine.

Property of American Airlines

https://truckmanualshub.com/

SECTION 7. INSPECTION AND REPAIR LOG

Table 7-1.Inspection and Repair Log

Date	Comments

Property of American Airlines

https://truckmanualshub.com/

Table 7-1.Inspection and Repair Log

Date	Comments

Property of American Airlines

https://truckmanualshub.com/

JLG® JLG Industries, Inc.

TRANSFER OF OWNERSHIP

To: JLG, Gradall, Lull and Sky Trak product owner:

If you now own, but ARE NOT the original purchaser of the product covered by this manual, we would like to know who you are. For the purpose of receiving safety-related bulletins, it is very important to keep JLG Industries, Inc. updated with the current ownership of all JLG products. JLG maintains owner information for each JLG product and uses this information in cases where owner notification is necessary.

Please use this form to provide JLG with updated information with regard to the current ownership of JLG Products. Please return completed form to the JLG Product Safety & Reliability Department via facsimile (717) 485-6573 or mail to address as specified on the back of this form.

Thank you,
Product Safety & Reliability Department
JLG Industries, Inc.
1 JLG Drive
McConnellsburg, PA 17233-9533
Telephone: (717) 485-5161
Fax: (717) 485-6573

NOTE: Leased or rented units should not be included on this form.

Mfg. Model: _____

Serial Number: _____

Previous Owner: _____

Address: _____

City: _____ State: _____

Zip: _____ Telephone: (_____) _____

Date Of Transfer: _____

Current Owner: _____

Address: _____

City: _____ State: _____

Zip: _____ Telephone: (_____) _____

Who in your organization should we notify?

Name: _____

Title: _____

Please cut on the dotted line and fax to 717-485-6573

Property of American Airlines

https://truckmanualshub.com/

Property of American Airlines

https://truckmanualshub.com/

Property of American Airlines

https://truckmanualshub.com/

Corporate Office
JLG Industries, Inc.
1 JLG Drive
McConnellsburg PA. 17233-9533
USA
Phone: (717) 485-5161
Fax: (717) 485-6417

Property of American Airlines

JLG Worldwide Locations

JLG Industries (Australia)
P.O. Box 5119
11 Bolwarra Road
Port Macquarie
N.S.W. 2444
Australia
Phone: (61) 2 65 811111
Fax: (61) 2 65 810122

JLG Industries (UK)
Unit 12, Southside
Bredbury Park Industrial Estate
Bredbury
Stockport
SK6 2sP
England
Phone: (44) 870 200 7700
Fax: (44) 870 200 7711

JLG Deutschland GmbH
Max Planck Strasse 21
D-27721 Ritterhude/lhlpohl
Bei Bremen
Germany
Phone: (49) 421 693 500
Fax: (49) 421 693 5035

JLG Industries (Italia)
Via Po. 22
20010 Pregnana Milanese - MI
Italy
Phone: (39) 02 9359 5210
Fax: (39) 02 9359 5845

JLG Latino Americana Ltda.
Rua Eng. Carlos Stevenson,
80-Suite 71
13092-310 Campinas-SP
Brazil
Phone: (55) 19 3295 0407
Fax: (55) 19 3295 1025

JLG Europe B.V.
Jupiterstraat 234
2132 HJ Foofddorp
The Netherlands
Phone: (31) 23 565 5665
Fax: (31) 23 557 2493

JLG Industries (Norge AS)
Sofeimyrveien 12
N-1412 Sofienyr
Norway
Phone: (47) 6682 2000
Fax: (47) 6682 2001

JLG Polska
Ul. Krolewska
00-060 Warsawa
Poland
Phone: (48) 91 4320 245
Fax: (48) 91 4358 200

JLG Industries (Europe)
Kilmartin Place,
Tannochside Park
Uddingston G71 5PH
Scotland
Phone: (44) 1 698 811005
Fax: (44) 1 698 811055

JLG Industries (Pty) Ltd.
Unit 1, 24 Industrial Complex
Herman Street
Meadowdale
Germiston
South Africa
Phone: (27) 11 453 1334
Fax: (27) 11 453 1342

Plataformas Elevadoras
JLG Iberica, S.L.
Trapadella, 2
P.I. Castellbisbal Sur
08755Castellbisbal
Spain
Phone: (34) 93 77 24700
Fax: (34) 93 77 11762

JLG Industries (Sweden)
Enkopingsvagen 150
Box 704
SE - 175 27 Jarfalla
Sweden
Phone: (46) 8 506 59500
Fax: (46) 8 506 59534