https://truckmanualshub.com/

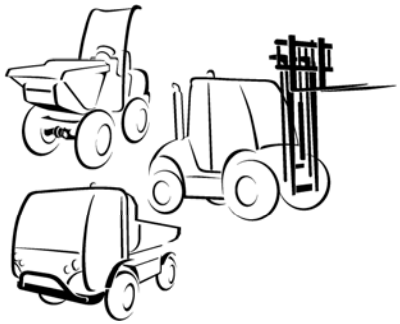

AUSA M-50 x 4

ROTAX ENGINE WORKSHOP MANUAL

https://truckmanualshub.com/

https://truckmanualshub.com/

https://truckmanualshub.com/

TABLE OF CONTENTS

TROUBLESHOOTING **03-02-1**
- **COOLING SYSTEM** **03-02-1**
- **MAGNETO SYSTEM** **03-02-2**
- **LUBRICATION** **03-02-4**
- **CYLINDER AND HEAD** **03-02-6**
- **CRANKSHAFT AND BALANCER SHAFT** **03-02-7**
- **GEARBOX** **03-02-7**
- **REWIND STARTER** **03-02-9**
- **CVT** **03-02-10**
- **ENGINE GENERAL** **03-02-15**

LEAK TEST **03-03-1**
- GENERAL VERIFICATION 03-03-1
- **LEAK TEST PROCEDURE** **03-03-1**
- PREPARATION AND TEST 03-03-1
- INSTALLATION 03-03-3

REMOVAL AND INSTALLATION **03-04-1**
- GENERAL 03-04-3
- ENGINE REMOVAL 03-04-3
- ENGINE INSTALLATION 03-04-8
- ANTI-VIBRATION SYSTEM 03-04-9
- EXHAUST SYSTEM 03-04-9
- SHIFTING SYSTEM 03-04-10

COOLING SYSTEM **03-05-1**
- **WATER PUMP** **03-05-1**
- **COOLING SYSTEM** **03-05-2**
- GENERAL 03-05-3
- COOLING SYSTEM LEAK TEST 03-05-3
- INSPECTION 03-05-3
- DRAINING THE SYSTEM 03-05-4
- COOLANT REPLACEMENT 03-05-4
- THERMOSTAT 03-05-5
- WATER TEMPERATURE SWITCH 03-05-6
- WATER PUMP HOUSING 03-05-6
- WATER PUMP IMPELLER 03-05-7
- WATER PUMP SHAFT 03-05-7
- PRESSURE CAP 03-05-10
- RADIATOR 03-05-10
- COOLANT TANK 03-05-11

https://truckmanualshub.com/

COOLING FAN 03-05-11
TEMPERATURE SENDER 03-05-12

REWIND STARTER 03-06-1
GENERAL 03-06-2
REWIND STARTER 03-06-2
STARTING PULLEY 03-06-5

MAGNETO SYSTEM 03-07-1
GENERAL 03-07-2
MAGNETO HOUSING COVER 03-07-2
OIL SEAL 03-07-4
STATOR 03-07-5
CPS (Crankshaft Position Sensor) 03-07-6
ROTOR 03-07-6

LUBRICATION SYSTEM 03-08-1
GENERAL 03-08-2
ENGINE OIL PRESSURE TEST 03-08-2
OIL CHANGE 03-08-3
OIL FILTER 03-08-3
OIL STRAINER 03-08-4
ENGINE OIL PRESSURE REGULATOR 03-08-6
OIL PUMP 03-08-6

CYLINDER AND HEAD 03-09-1
GENERAL 03-09-3
SPARK PLUG 03-09-3
THERMOSTAT 03-09-3
VALVE COVER 03-09-4
VALVE ADJUSTMENT 03-09-4
CHAIN TENSIONER 03-09-5
CHAIN TENSIONER HOUSING 03-09-5
DECOMPRESSOR 03-09-6
CAMSHAFT TIMING GEAR 03-09-8
ROCKER ARM 03-09-9
TIMING CHAIN 03-09-11
CYLINDER HEAD 03-09-11
CAMSHAFT 03-09-13
VALVE SPRING 03-09-14
VALVE 03-09-16
VALVE GUIDE PROCEDURE 03-09-18
CYLINDER 03-09-19
PISTON 03-09-21
PISTON RINGS 03-09-24

https://truckmanualshub.com/

CRANKSHAFT/BALANCER SHAFT **03-10-1**
CRANKCASE **03-10-1**
CRANKSHAFT/BALANCER SHAFT **03-10-2**
GENERAL 03-10-3
CRANKSHAFT LOCKING PROCEDURE 03-10-3
TIMING CHAIN 03-10-4
TIMING CHAIN GUIDE 03-10-5
CRANKCASE 03-10-5
BALANCER SHAFT 03-10-9
CRANKSHAFT 03-10-10

GEARBOX **03-11-1**
OUTPUT SHAFT AND TRANSMISSION **03-11-1**
CRANKCASE **03-11-2**
GENERAL 03-11-3
OIL SEALS 03-11-3
OUTPUT SHAFT 03-11-3
CRANKCASE 03-11-6
GEARBOX 03-11-12
SHIFTING INDICATOR SWITCH 03-11-21
STARTER DRIVE PINION 03-11-22

CVT **03-12-1**
GENERAL 03-12-2
BELT REPLACEMENT 03-12-2
DRIVE PULLEY 03-12-3
DRIVEN PULLEY 03-12-10

https://truckmanualshub.com/

https://truckmanualshub.com/

TROUBLESHOOTING

The following charts are provided to help in diagnosing the probable source of troubles. It should be used as a guideline. This section pertains to engine mechanical components only. Some related problems can come from other systems such as ignition system, fuel system, etc. and have an impact on the engine. Ensure to check the other systems prior to concluding that the engine is in fault.

COOLING SYSTEM

SYMPTOM	**HIGH ENGINE OPERATING TEMPERATURE.**
CONDITION	NORMAL USE.
Test/Inspection	**1. Check coolant level.** a. Coolant less than recommended level. *Refill.*
	2. Check temperature sensor for electrical/mechanical failure. a. Temperature sensor defective. *Replace.*
	3. Check thermostat. a. Thermostat defective. *Replace.*
	4. Check gasket(s) underneath water pump cover. a. Leakage in water pump cover area. *Retighten screws and/or replace gasket.*
	5. Check leak indicator hole (water pump housing area MAG side) if coolant leaks. a. Coolant leaking from leak indicator hole means a damaged rotary seal inside magneto cover. *Replace both rotary seal and oil seal (refer to COOLING SYSTEM and MAGNETO SYSTEM).*
	6. Check coolant bleeding screw on thermostat housing. a. Screw is loosed/missing and/or gasket ring is missing/broken. *Retighten/add screw and replace gasket ring.*
	7. Check condition of hoses and hose clamps fixation. a. Hoses are brittle and/or hard. *Replace.* b. Hose clamps are loose. *Retighten clamps.*
	8. Check condition of impeller located on the water pump shaft. a. Impeller wings broken and/or impeller thread is damaged. *Replace.*
	9. Check coolant drain screw on water pump housing MAG side (marked “Drain”). a. Copper ring on drain screw leaks. *Retighten screw and/or replace copper gasket ring.*

https://truckmanualshub.com/

SYMPTOM	**HIGH ENGINE OPERATING TEMPERATURE.**
CONDITION	NORMAL USE.
Test/Inspection	**10. Check cooling fan and connection.** a. Fan motor faulty. *Replace.* b. Wire harness is brittle or hard (no connection). *Replace.*
	11. Check cylinder head and/or cylinder base gasket. a. Worn out gasket(s) is (are) causing water leakage. *Replace gasket(s) and refill with coolant and oil (refer to COOLING/LUBRICATION SYSTEM and TECHNICAL DATA).*
	12. Check intermediate gear(s) behind magneto cover. a. Worn out and/or broken gear(s) is (are) causing less coolant supply. *Replace worn out and/or broken gear(s) (refer to LUBRICATION/MAGNETO SYSTEM).*
	13. Check radiator fan switch and fuse 20A. a. Faulty fan switch and/or faulty fuse. *Replace defective part(s).*
	14. Check radiator condition for leakage. a. Radiator cracked or deformed. *Replace radiator.*
	15. Check mud/dust in radiator fins. a. Radiator fin obstructed, hard air cooling. *Clean radiator fins*
	16. Check if water pump shaft is seized. a. Water pump shaft does not turn. *Replace defective part(s).*

MAGNETO SYSTEM

SYMPTOM	**NO SPARK.**
CONDITION	NORMAL USE.
Test/Inspection	**1. Check engine stop switch position.** a. Engine stop switch is in OFF position. *Place engine stop switch to RUN position.*
	2. Check battery. a. Battery shows less power. *Reload battery.* b. Battery has electrical failure. *Replace battery.*
	3. Check condition of fuse(s). a. Faulty fuse(s). *Replace.*

https://truckmanualshub.com/

SYMPTOM	**NO SPARK.**
CONDITION	NORMAL USE.
Test/Inspection	**4. Check spark plug electrode condition.** a. Gap is too big. *Readjust gap (refer to TECHNICAL DATA).* b. Spark plug condition is bad. *Diagnose spark plug condition and replace it (refer to IGNITION SYSTEM).*
	5. Check spark plug cable and ignition wire. a. Cable and/or ignition wire is (are) damaged and/or shows electrical failure. *Replace damaged part(s).*
	6. Check ignition coil for damage and/or electrical failure. a. Ignition coil damaged and/or resistance value out of specification (refer to *TECHNICAL DATA*). *Replace ignition coil.* b. Connector is corroded or ignition coil shows electrical failure. *Clean connector area and/or replace ignition coil.* c. Wire harness is brittle or hard (no connection). *Replace.*
	7. Check CPS (crankshaft position sensor) for damage and/or electrical failure. a. Sensor shows electrical failure and/or damages. *Replace CPS.* b. Connector is corroded. *Clean and reconnect.* c. Resistance value is out of specification (refer to *TECHNICAL DATA*). *Replace CPS.*
	8. Check wire harness for cracks or other damages. a. Harness shows electrical failure and/or other damages. *Replace wire harness and/or damaged wire section.*
	9. Check magneto for damage and/or electrical failure. a. Radial position of rotor wrong due to a broken woodruff key. *Replace* woodruff key. b. Connector on magneto is damaged and/or has electrical failure. *Repair and clean contacts of connector.* c. Coating on stator winding is damaged. *Replace magneto.* d. Resistance value is out of specification (refer to *TECHNICAL DATA*). *Replace magneto.*
	10. Check electronic module. a. Module shows electrical failure or damages. *Replace electronic module.* b. Connectors are corroded. *Clean and reconnect.* c. Electronic module has bad ground to the vehicle frame. *Clean metal surface for good ground.*

https://truckmanualshub.com/

LUBRICATION

SYMPTOM	LOW OR NO OIL PRESSURE/HIGH OIL CONSUMPTION.
CONDITION	NORMAL USE.
Test/Inspection	**1. Check oil level and search for leakage on crankcase and/or defective seals.** a. Crankcase is leaking due to damage. *Rebuild engine with new crankcase and gasket parts. Use a high quality oil (refer to TECHNICAL DATA).* b. Crankcase is leaking due to loose screws. *Retighten screws with recommended torque.* c. Sealing rings, O-rings and/or gaskets are brittle and/or hard or damaged. *Replace damaged parts.* d. Piston rings worn out (blue-colored engine exhaust emission). *Replace piston rings (refer to CYLINDER AND HEAD).* e. Piston rings are broken (low compression and blue-colored engine exhaust emission). *Replace piston rings (refer to CYLINDER AND HEAD).* f. Valve stem seal damaged and/or sealing lip is hard and/or brittle. *Replace all valve stem seals.*
	2. Check oil filter for contamination. a. Oil filter clogged. *Replace oil filter and oil at the same time. Use a high quality oil (refer to TECHNICAL DATA).*
	3. Check oil pressure regulator valve (spring) function. a. Valve spring damaged (valve always open). *Replace spring.* b. Valve stays open in crankcase PTO due to contamination (metallic particles). *Clean and/or repair valve piston.*
	4. Check oil drain plug on engine bottom. a. Plug is loosed and/or gasket ring is missing. *Retighten the plug and/or place gasket ring.*
	5. Check oil strainer on engine bottom. a. Screw(s) is (are) loosed and/or gasket is damaged, brittle or hard. *Retighten screw and/or replace gasket.* b. Oil strainer is clogged due to contamination. *Clean or replace strainer and diagnose causes. Replace possible damaged parts. Use high quality oil (refer to TECHNICAL DATA).*
	6. Check leak indicator hole for oil leaks (water pump housing area MAG side). a. Oil leaking from leak indicator hole means a damaged oil seal inside magneto cover on water pump shaft. *Replace both rotary seal and oil seal (refer to COOLING SYSTEM and MAGNETO SYSTEM).*
	7. Check oil pressure switch function. a. Oil pressure switch damaged. *Replace oil pressure switch.*

https://truckmanualshub.com/

SYMPTOM	**LOW OR NO OIL PRESSURE/HIGH OIL CONSUMPTION.**
CONDITION	NORMAL USE.
Test/Inspection	**8. Check oil orifice(s) on the oil pump suction side.** a. Oil orifice(s) is (are) clogged. *Clean from contamination. Replace oil and oil filter if necessary (refer to MAINTENANCE or LUBRICATION).*
	9. Check oil pump operation. a. Oil pump rotor is out of wear limit. *Replace oil pump shaft (refer to LUBRICATION).* b. Oil pump seized due to oil leakage and/or air inclusion. *Replace oil pump (refer to LUBRICATION).* c. Gears driving oil pump are broken or damaged. *Replace gears.* d. Incorrect oil being used. *Use a high quality oil (refer to TECHNICAL DATA).*
	10. Check plain bearings in crankcase for heavy wear. a. Plain bearings out of specification (increased clearance). *Replace all plain bearings at the same time (refer to CRANKSHAFT).*

SYMPTOM	**OIL CONTAMINATION (WHITE APPEARANCE).**
CONDITION	NORMAL USE.
Test/Inspection	**1. Check leak indicator hole (water pump housing area MAG side) if water and oil leaks.** a. Leakage of oil/water mixture from leak indicator hole means damaged oil seal and rotary seal inside magneto cover on water pump shaft. *Replace both rotary seal and oil seal and refill with recommended oil and/or coolant (refer to COOLING SYSTEM and MAGNETO SYSTEM).*
	2. Check cylinder head and/or cylinder base gasket. a. Gasket damaged or leaking. *Retighten cylinder head with recommended torque and/or replace gasket.*
	3. Check screws for torque. a. Screws not fixed. *Retighten screws with recommended torque and/or replace oil.*
	4. Check oil for particles (may indicate possible damages inside the engine). a. Oil contamination due to metal or plastic particles. *Replace possibly damaged parts. Use a high quality oil (refer to TECHNICAL DATA).*

https://truckmanualshub.com/

CYLINDER AND HEAD

SYMPTOM	**UNUSUAL ENGINE NOISE AND/OR VIBRATION IN IDLE SPEED.**
CONDITION	NORMAL USE.
Test/Inspection	**1. Check operation of decompressor located on camshaft.** a. Decompressor shaft stucks and/or torsion spring is damaged. *Replace spring and/or decompressor mechanism.* b. Loose camshaft gear. *Retighten camshaft gear (refer to CYLINDER AND HEAD).*
	2. Check chain tensioner operation. a. Faulty chain tensioner. *Replace spring and/or mechanism.*
	3. Check valve adjustment. a. Intake and/or exhaust valves not adjusted correctly. *Adjust valves.*

SYMPTOM	**UNUSUAL ENGINE NOISE AND/OR VIBRATION WHILE OPERATING.**
CONDITION	NORMAL USE.
Test/Inspection	**1. Check items 1 and 2 of UNUSUAL ENGINE NOISE AND/OR VIBRATION IN IDLE SPEED.**
	2. Check noise coming from cylinder head area. a. Check valve clearance. *Readjust valve clearance and/or replace defective part(s).* b. Chain guide worn out. *Replace chain guide.* c. Stretched chain and/or worn out sprocket. *Replace chain and sprocket at the same time.* d. Sprocket screw got loose. *Retighten screw with recommended torque.* e. Rocker arm(s) is (are) worn out (valve adjustment). *Readjust valve clearance and/or replace rocker arm(s).* f. Thrust washer(s) on rocker arm shaft is (are) missing. *Fit thrust washer(s) (refer to CYLINDER AND HEAD).*

SYMPTOM	**OIL CONTAMINATION ON CYLINDER AND/OR HEAD.**
CONDITION	NORMAL USE.
Test/Inspection	**1. Check screws for torque.** a. Loose screws. *Retighten screws with recommended torque.* b. Gaskets are brittle, hard, worn out or damaged. *Replace damaged gasket(s).*

https://truckmanualshub.com/

CRANKSHAFT AND BALANCER SHAFT

SYMPTOM	**UNUSUAL ENGINE NOISE AND/OR VIBRATIONS.**
CONDITION	NORMAL USE.
Test/Inspection	**1. Check for possible plain bearing failure.** a. Oil pressure is out of specified values. *Replace damaged parts (refer to LUBRICATION).* b. Connecting rod small end bearing is damaged and/or out of specification. *Replace damaged and/or worn out part(s).* c. Connecting rod big end clearance is out of specification. *Replace damaged and/or worn out part(s).* d. Crankshaft plain bearing MAG/PTO side is damaged and/or out of specification. *Replace crankshaft and plain bearing MAG/PTO at the same time (refer to CRANKSHAFT).*
	2. Check ball bearing(s) on balancer shaft end(s). a. Ball bearing(s) do(es) not move freely. *Replace bearing(s).*
	3. Check that mark on balancer shaft is aligned with crankshaft position mark. a. Mark on balancer shaft and crankshaft are not aligned. *Readjust position of balancer shaft and crankshaft (refer to CRANKSHAFT/BALANCER SHAFT).*

GEARBOX

SYMPTOM	**UNUSUAL ENGINE NOISE AND/OR VIBRATIONS.**
CONDITION	NORMAL USE.
Test/Inspection 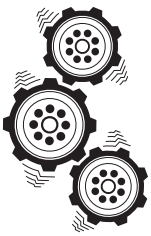	**1. Check oil level in engine.** a. Oil leakage from engine. *Replace damaged gasket(s) and/or oil seal(s), torque screws and refill with oil up to specified level (refer to TECHNICAL DATA).*
	2. Check bearings in the gearbox for free movement. a. Bearing(s) do(es) not move freely. *Replace bearing(s).*
	3. Check for knocking noise. a. Tooth of gears are damaged and/or worn. *Replace respective gears.*

https://truckmanualshub.com/

SYMPTOM	**GEAR INDICATION FAILS.**
CONDITION	NORMAL USE.
Test/Inspection	**1. Check wire harness connector pins (gear indicator) and/or electronical system.** a. Connector pins are corroded and/or damaged. *Clean connector and/or replace wire harness if damaged.* b. Electronical system failed and/or damaged. *Repair and/or replace damaged part(s).*
	2. Check contact screws on PTO side (behind CVT driven pulley) for damage and/or wear. a. Shifting indicator switch(es) pin(s) is (are) worn and/or damaged. *Replace shifting indicator switch(es).* b. Contact(s) is (are) corroded and/or contact screw for wire harness got loose. *Clean contact surface and retighten contact screw(s) with recommended torque.* c. Wire harness has broken cables. *Replace wire harness.*

SYMPTOM	**GEAR(S) IS (ARE) HARD TO SHIFT.**
CONDITION	NORMAL USE.
Test/Inspection	**1. Check shift shaft spline and/or shift forks for wear and/or damages.** a. Shift shaft is worn out and/or shows damaged splines. *Replace shift shaft.* b. Shift drum track(s) and/or splines is (are) worn out or damaged. *Replace shift drum and damaged part(s).* c. Shift fork(s) is (are) worn out and/or engagement pins are damaged. *Replace shift fork(s).* d. Shift fork(s) is (are) worn out and/or fork(s) is (are) damaged. *Replace shift fork(s).* e. Shift gear(s) is (are) worn out. *Replace shift gear(s).* f. Shifting indicator switch(es) pin(s) is (are) worn out (no roundings on top of pin). *Replace shifting indicator switch(es).*
	2. Check engine idle speed (choke in use). a. Idle speed is too high (CVT starts to work). *Adjust idle speed.* b. Choke is in use and increases the engine RPM. *Release choke.*
	3. Check CVT one way clutch on drive pulley. a. CVT one way clutch was not lubricated correctly. *Lubricate CVT one way clutch (refer to CVT).* b. CVT one way clutch is worn out or damaged. *Replace defective part(s) (refer to CVT).*

https://truckmanualshub.com/

SYMPTOM	**GEAR(S) IS (ARE) HARD TO SHIFT.**
CONDITION	NORMAL USE.
Test/Inspection	**4. Check transmission lever and connecting rod.** a. Ball joint and/or ball joint nut is (are) loose. *Retighten or replace the ball joint.*
	5. Check spring on shifter plate. a. Broken spring. *Replace the spring.*
	6. Check for any mud intrusion.s a. CVT parts dirty. *Clean all CVT parts.*

REWIND STARTER

SYMPTOM	**REWIND STARTER ROPE DOES NOT REWIND.**
CONDITION	NORMAL USE.
Test/Inspection	**1. Check rewind spring.** a. Broken spring. *Replace spring (refer to REWIND STARTER).*

SYMPTOM	**REWIND STARTER PAWL DOES NOT ENGAGE.**
CONDITION	NORMAL USE.
Test/Inspection	**1. Check stop spring.** a. Broken stop spring. *Replace.*
	2. Check pawl and pawl lock. a. Pawl and pawl lock are stuck together because of heat. *Replace.*
	3. Check pawl and rope sheaves. a. Pawl and rope sheaves are stuck together because of heat. *Replace.*

https://truckmanualshub.com/

CVT

SYMPTOM	THE ATV ACCELERATES SLOWLY, ESPECIALLY WHEN IT IS STOPPED.
CONDITION	NORMAL USE.
Test/Inspection	**1. Check drive belt condition.** a. Belt is too narrow (drive belt engagement is higher in drive pulley). *Replace belt if width is less than specified (refer to CVT and/or TECHNICAL DATA).*
	2. Check roller(s) on governor cup and/or lever condition on drive pulley sliding half. a. Roller(s) is (are) worn and/or damaged *(refer to CVT).* *Replace governor cup assembly.* b. Lever(s) on drive pulley sliding half is (are) worn and/or damaged *(refer to CVT).* *Replace all levers at the same time (lever kit).*
	3. Check drive pulley sliding half for free axial movement. a. Sliding half is stuck *(refer to CVT).* *Replace damaged part(s).*
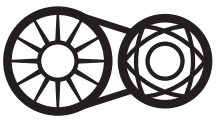	**4. Check condition of drive/driven pulley spring.** a. Drive pulley spring tension is too smooth and/or damaged (refer to CVT). *Replace spring.* b. Driven pulley spring tension is too stiff (refer to CVT). *Replace spring.*
	5. Check carburator adjustment and/or high altitude calibration. a. Carburator is not adjusted according to specified values and/or high altitude calibration. *Readjust carburator.*
	6. Check engine condition. a. Low engine compression. *Replace defective part(s).*
	7. Check ignition condition. a. Faulty spark plug. *Install new spark plug(s).*
	8. Check valve adjustment. a. Intake and/or exhaust valves are not adjusted correctly. *Adjust valves.*
	9. Check differentials operation. a. Vehicle on Neutral is hard to move. *Repair or replace defective part(s).*

https://truckmanualshub.com/

SYMPTOM	**ENGINE MAXIMUM RPM IS TOO HIGH AND TOP SPEED IS NOT REACHED.**
CONDITION	NORMAL USE.
Test/Inspection 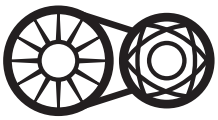	**1. Check items 1 to 3 of THE ATV ACCELERATES SLOWLY, ESPECIALLY WHEN IT IS STOPPED.**
	2. Check drive/driven pulley spring tension. a. Drive pulley spring tension is too stiff. *Replace spring (recommended Bombardier spring).* b. Driven pulley spring tension is too smooth and/or damaged (refer to CVT). *Replace spring.*
	3. Check drive/driven pulley area for contamination and/or water intrusion. a. CVT area is contaminated with water, dirt or oil. *Clean CVT system and replace damaged part(s).*

SYMPTOM	**DRIVE PULLEY NOISE IN IDLE SPEED.**
CONDITION	NORMAL USE.
Test/Inspection	**1. Check slider shoes (drive pulley).** a. Worn slider shoes (increased clearance between governor cup and drive pulley sliding half). *Replace all slider shoes at the same time (slider shoes kit).*
	2. Check driven pulley sliding mechanism (between driven pulley outer and inner half). a. Mechanism is stucked and/or damaged. *Replace driven pulley assembly.*
	3. Check roller(s) and/or levers for wear (located on sliding half of drive pulley). a. Roller(s) on governor cup is (are) worn out and/or damaged *(refer to CVT).* *Replace governor cup assembly.* b. Lever(s) on drive pulley sliding half is (are) worn out and/or damaged *(refer to CVT).* *Replace all levers at the same time (lever kit).*
	4. Check drive pulley screw for torque. a. Loose screw. *Retighten screw with recommended torque.*
	5. Check one-way clutch condition on drive pulley sliding half. a. Bearing(s) do(es) not move freely. *Replace damaged part(s) and lubricate inside of one-way clutch (refer to CVT).* b. Spring sleeve(s) inside one-way clutch is (are) worn out. *Replace both sleeves and springs and lubricate inside of one-way clutch (refer to CVT).* c. Spring(s) inside one-way clutch is (are) worn out. *Replace both pins and springs and lubricate inside of one-way clutch (refer to CVT).*

https://truckmanualshub.com/

SYMPTOM	**DRIVE PULLEY NOISE WHEN ACCELERATING/DECELERATING.**
CONDITION	NORMAL USE.
Test/Inspection 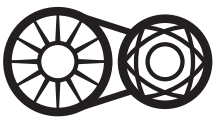	**1. Check items 1 to 5 of DRIVE PULLEY NOISE IN IDLE SPEED.**
	2. Check if belt runs in dry conditions. a. Drive pulley area is wet/contaminated due to water/dirt intrusion. *Clean driven pulley area and/or drain water out of CVT cover.*
	3. Check drive/driven pulley screw for torque. a. Loose screw on drive and/or driven pulley. *Retighten screw with recommended torque.*
	4. Check cam and driven pulley fixed half for wear. a. Cam and/or drive pulley fixed half out of wear limit and/or damaged. *Replace damaged part(s).*
	5. Check torque gear fixed in driven pulley sliding half for wear. a. Torque gear out of wear limit and/or damaged. *Replace torque gear (refer to CVT).*
	6. Check for foreign particles in CVT area (stones, dirt, etc.). a. Small particles damaged belt and/or pulley surface(s). *Clean system and replace damaged parts (refer to CVT).*

SYMPTOM	**VIBRATIONS ORIGINATING FROM DRIVE PULLEY.**
CONDITION	NORMAL USE.
Test/Inspection 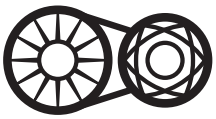	**1. Check tightening torque of drive pulley nut.** a. Moving sliding half. *Retighten nut.*
	2. Check fixed half bushings. a. Excessive gap between bushings and fixed half shaft, thus restraining sliding half movements. *Replace fixed half assembly.*
	3. Check starter ring gear condition. a. Starter ring gear loosened. *Retighten ring gear and/or mount it in original position (balanced system).*
	4. Check if slider shoes are present and/or placed in correct position. a. Slider shoe(s) is (are) missing and/or damaged. *Replace all slider shoes at the same time (slider shoes kit).*

https://truckmanualshub.com/

SYMPTOM	**VIBRATIONS ORIGINATING FROM DRIVEN PULLEY.**
CONDITION	NORMAL USE.
Test/Inspection 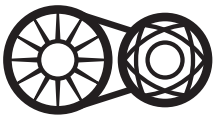	**1. Check fixed and sliding half bushings on driven pulley.** a. Excessive gap between bushings and CVT shaft, thus restraining sliding half movements. *Replace fixed and/or sliding half of driven pulley, polish CVT shaft area with fine emery cloth and wipe clean with a cloth.*

SYMPTOM	**PULLEYS DO NOT DOWN/UP SHIFT PROPERLY.**
CONDITION	NORMAL USE.
Test/Inspection 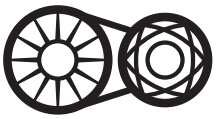	**1. Check drive pulley bushings (cleanliness, wear, etc.).** a. Bushings stick to fixed half pulley shaft. *Clean or replace.* b. Spring seat sticks to sliding half pulley bushing. *Clean system and/or replace sliding half pulley.* c. One-way clutch does not operate properly. *Clean system and/or replace damaged part(s).*
	2. Check driven pulley spring tension. a. Driven pulley spring tension is too weak and/or broken. *Replace.* b. Driven pulley cam is worn or damaged. *Replace.*

SYMPTOM	**BELT GLAZED EXCESSIVELY OR HAVING BAKED APPEARANCE.**
CONDITION	NORMAL USE.
Test/Inspection 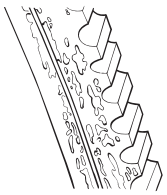 A00D0AY	**1. Check if CVT air intake and/or outlet is clogged.** a. CVT area heats up due to contamination. *Clean air intake and/or outlet from contamination.* b. Fans located on drive pulley fixed half (underneath ring gear) are clogged. *Clean from contamination.*
	2. Check if pulley halves are clean. a. Oil on pulley surfaces. *Clean pulley halves and replace belt.* b. Water intrusion in CVT area. *Find root cause and repair. Drain water and replace belt.*

https://truckmanualshub.com/

SYMPTOM	**BELT WORN EXCESSIVELY IN TOP WIDTH.**
CONDITION	NORMAL USE.
Test/Inspection 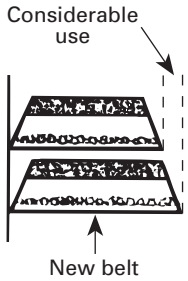 A00D0BY	**1. Check drive belt width.** a. Considerable wear. *Replace belt if narrower than specified (refer to CVT or TECHNICAL DATA).*
	2. Check drive belt identification number. a. Improper belt angle (wrong type of belt). *Replace belt with an appropriate drive belt.*
	3. Check for localized belt wear caused by belt slippage. a. Localized wear. *Replace belt.*

SYMPTOM	**BELT DISINTEGRATION.**
CONDITION	NORMAL USE.
Test/Inspection A00DOEY	**1. Check drive belt identification number.** a. Excessive belt speed. *Using unspecified type of belt. Replace belt with proper type of belt (refer to TECHNICAL DATA).*
	2. Check if pulley halves are clean. a. Oil on pulley surfaces. *Clean pulley surfaces with fine emery cloth and wipe clean using Pulley Flange Cleaner (P/N 413 711 809) and a cloth.* b. Drive/driven pulley halves are damaged through stones inside CVT area. *Clean pulley surfaces with fine emery cloth, wipe clean with a cloth or replace drive/driven pulley halves and belt.*

SYMPTOM	**FLEX CRACKS BETWEEN COGS.**
CONDITION	NORMAL USE.
Test/Inspection 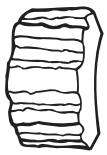 A00D0GY	**1. Check drive belt condition.** a. Considerable use, belt wearing out. *Replace.* b. Brittle belt condition through aging. *Replace belt.*

https://truckmanualshub.com/

ENGINE GENERAL

SYMPTOM	**ENGINE BACKFIRES.**
CONDITION	NORMAL USE.
Test/Inspection 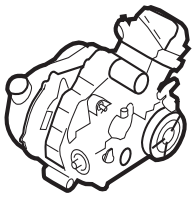	**1. Check spark plug and/or electrical system.** a. Carbon accumulation caused by defective spark plug. *Clean carbon accumulation and replace spark plug.* b. Electrical system has failure. *Replace defective part(s).*
	2. Check leakage on intake manifold. a. Air leak on intake system. *Retighten screws and/or replace intake manifold.*
	3. Check exhaust air leaking. a. Exhaust gasket is leaking. *Retighten screws and/or replace exhaust gasket.*
	4. Check intake valve(s) for leaking. a. Intake valve(s) is (are) leaking. *Repair or replace valve(s).*
	5. Check if fuel supply is insufficient at high RPM. a. Fuel line is contaminated and/or bent (engine gets lean). *Clean and/or replace defective part(s).*
	6. Check carburation. a. Faulty carburetor settings. *Adjust carburetor.*

SYMPTOM	**ENGINE SUDDENLY TURNS OFF.**
CONDITION	NORMAL USE.
Test/Inspection 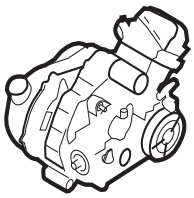	**1. Check spark plug cap contact and/or cable.** a. Spark plug cap loose. *Replug cap.* b. Spark plug cable melted and/or damaged. *Replace spark plug cable.*
	2. Check condition of spark plug (blue spark ideal). a. Red, jumping spark means a damaged spark plug. *Replace spark plug with appropriate heat range (refer to TECHNICAL DATA).* b. Condition of spark plug. *Readjust carburator and/or replace spark plug.*

https://truckmanualshub.com/

SYMPTOM	**ENGINE SUDDENLY TURNS OFF.**
CONDITION	NORMAL USE.
Test/Inspection	**3. Check fuel supply to engine intake.** a. Fuel valve is switched off. *Turn on fuel valve.* b. Run out of fuel. *Turn fuel valve to "RES" position and refill.* c. Poor quality and/or wrong fuel. *Clean from contamination and use appropriate fuel (refer to TECHNICAL DATA).* d. Carburetor contaminated. *Clean jets and carburetor float chamber from contamination.* e. Fuel line clogged and/or bent. *Clean fuel supply from contamination and/or replace defective part(s).* f. Fuel supply insufficient at high RPM. *Clean fuel supply from contamination.*
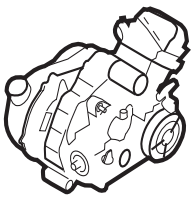	**4. Perform engine leak test. Refer to ENGINE LEAK TEST procedure. Check for possible piston seizure.** a. Damaged head gasket and/or seal and/or leaking inlet/exhaust valve(s). *Replace and/or repair defective parts.*
	5. Piston seizure (piston ring(s) damaged and/or cylinder shows grooves). a. Spark plug heat range is too low. *Replace damaged parts and install spark plug with appropriate heat range (refer to TECHNICAL DATA).* b. Compression ratio is too high. *Install genuine parts.* c. Poor oil quality. *Use a high quality oil.* d. Leaks at air intake manifold (engine gets too lean). *Retighten screws or replace air intake manifold.* e. Contamination (like sand) through engine intake. *Replace defective part(s) and use new air filter.*
	6. Melted and/or perforated piston dome; melted section at ring end gap. a. Spark plug heat range is too low. *Install recommended spark plug (refer to TECHNICAL DATA).* b. Coolant less than recommended level (engine gets too hot). *Repair cooling circuit and/or refill with recommended liquid.*

https://truckmanualshub.com/

SYMPTOM	**ENGINE SUDDENLY TURNS OFF.**
CONDITION	NORMAL USE.
Test/Inspection	**7. Cracked or broken piston.** a. Cracked or broken piston due to excessive piston/cylinder clearance or engine overreving. *Replace piston. Check piston/cylinder clearance (refer to CYLINDER AND HEAD).*
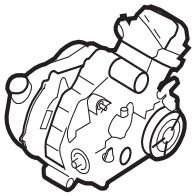	**8. Check connecting rod, crankshaft, rocker arm rollers movement.** a. Connecting rod failure due to lack of oil. *Repair and replace defective parts and use a high quality oil.* b. Crankshaft failure due to lack of oil. *Repair and replace defective parts and use a high quality oil.* c. Oil contamination due to clogged oil filter. *Replace oil filter and oil at the same time, replace defective part(s) (refer to MAINTENANCE CHART).*
	9. Check valve springs exhaust/inlet. a. Broken valve spring damages the cylinder head, valve(s), rocker arm(s)/piston. *Replace defective part(s) and do the valve adjustment.*
	10. Check for water intrusion through intake system into combustion chamber. a. Water in intake system and/or combustion chamber. *Replace defective part(s).*

SYMPTOM	**ENGINE TURNS OVER BUT FAILS TO START.**
CONDITION	NORMAL USE.
Test/Inspection	**1. Check items of ENGINE DOES NOT START — NO SPARK AT SPARK PLUG.**
	2. Check spark plug. a. Inspect spark plug (no spark) or wrong spark plug gap. *Readjust gap and clean spark plug or replace.*
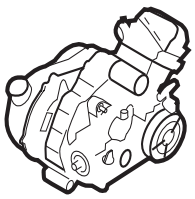	**3. Check for fuel on spark plug.** a. Flooded engine (spark plug wet when removed). *Do not overchoke. Remove wet spark plug, turn ignition switch to OFF and crank engine several times. Install clean dry spark plug. Start engine following usual starting procedure.*
	4. Check engine compression. a. Insufficient engine compression. *Replace defective part(s) (ex.: piston, ring(s), etc.).* b. Valve seat worn and/or damaged. *Repair by performing valve guide procedure (refer to CYLINDER AND HEAD).* *Readjust valve clearance.*

https://truckmanualshub.com/

SYMPTOM	**ENGINE DOES NOT OFFER MAXIMUM POWER AND/OR DOES NOT REACH MAXIMUM OPERATING RPM.**
CONDITION	NORMAL USE.
Test/Inspection	**1. Check items of ENGINE SUDDENLY TURNS OFF.**
	2. Check air intake system. a. Air filter is clogged due to contamination. *Replace air filter.*
	3. Check spark plug condition and/or gap. a. Fouled spark plug or wrong spark plug gap. *Readjust gap and clean spark plug or replace.*
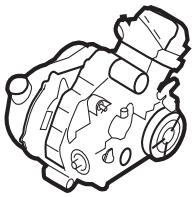	**4. Check spark plug type.** a. Improper spark plug heat range. *Install recommended spark plug (refer to TECHNICAL DATA).*
	5. Check engine compression and perform engine leak test. Refer to ENGINE LEAK TEST procedure. Check for possible piston seizure. a. Damaged head gasket and/or seal and/or leaking inlet/exhaust valve(s). *Replace and/or repair defective parts.* b. Worn piston and/or piston ring(s). *Replace (refer to CYLINDER AND HEAD).*
	6. Check for water in fuel (wrong fuel). a. There is water in fuel or wrong fuel. *Drain fuel system, search for leakage and refill it with appropriate fuel.*
	7. Check drive belt/CVT condition. a. Worn belt. *Replace belt if width is less than specified (refer to CVT).*

SYMPTOM	**HIGH ENGINE OPERATING TEMPERATURE.**
CONDITION	NORMAL USE.
Test/Inspection	**1. Check if cooling system shows any failure (see COOLING SYSTEM).** a. System is leaking. *Repair and/or replace damaged part(s).*
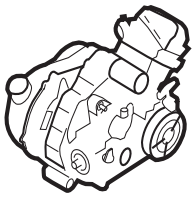	**2. Check condition and heat range of spark plug.** a. Melted spark plug tip or inadequate heat range. *Install recommended spark plug (refer to TECHNICAL DATA).*
	3. Check air inlet and outlet of the CVT cover. a. Air circulation is clogged (overheating). *Clean air circulation from contamination.* b. Drive belt worn and/or damaged. *Replace belt with an appropriate drive belt (refer to TECHNICAL DATA).*

https://truckmanualshub.com/

SYMPTOM	**STARTER TURNS, BUT ENGINE DOES NOT CRANK.**
CONDITION	NORMAL USE.
Test/Inspection 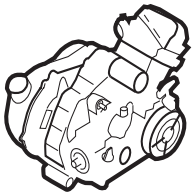	**1. Check gear condition on electric starter.** a. Worn and/or damaged starter gear. *Replace electric starter and/or starter drive.*
	2. Check condition of starter pinion gear. a. Worn and/or damaged starter pinion and/or ring gear. *Replace starter drive and/or drive pulley fixed half.*
	3. Check splines on starter drive. a. Poor movement of pinion gear on splines. *Clean and/or replace starter drive.*

SYMPTOM	**ENGINE DOES NOT START — NO SPARK AT SPARK PLUG (SEE MAGNETO SYSTEM).**
CONDITION	AT ENGINE CRANKING.
Test/Inspection	**1. Verify spark plug condition.** a. Defective, improperly set, worn out, fouled. *Identify source of problem and correct. Replace spark plug.*
	2. Verify condition of ignition coil and resistance with an ohmmeter. a. Mechanically damaged part. Vibration problem. Electrically damaged part. *Replace ignition coil.*
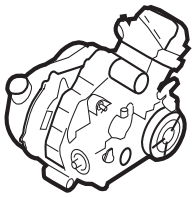	**3. Verify condition of CPS and resistance with an ohmmeter and connector condition.** a. Defective CPS. Corroded connector terminal. *Replace CPS. Clean terminals and apply silicone dielectric grease.* b. Mechanically damaged part. Vibration problem. Electrically damaged part. *Replace CPS and/or tighten mounting screw(s).* c. Metallic particles caused a short circuit between the soldered connections. *Clean CPS from metallic dust.*
	4. Check magneto for damage and/or electrical failure. a. Windings of stator have electrical failure (no charging causes an empty battery). *Replace magneto.*

https://truckmanualshub.com/

https://truckmanualshub.com/

LEAK TEST

GENERAL VERIFICATION

Before performing the cylinder leak test, verify the following:

– intake port/air filter contaminated (clogged) with dirt, sand, etc. (leads to worn valves, piston rings and finally to leak of power)

CAUTION: In case of piston ring and/or valve replacement always clean the whole engine and replace oil and oil filter.

– blue exhaust gas means damaged/worn piston rings
– clamp(s) tightness
– radiator and hoses
– oily contamination on leak indicator hole (speed sensor area) means a damaged oil seal on water pump shaft
– coolant out of leak indicator hole means a damaged rotary seal on water pump shaft (refer to COOLING SYSTEM)
– coolant escaping from water pump housing means damaged gasket(s) and/or loosened screws (refer to COOLING SYSTEM).

NOTE: For all the checkpoints mentioned above see the appropriate engine section to diagnose and repair the engine.

LEAK TEST PROCEDURE

PREPARATION AND TEST

NOTE: The following procedures should be done with a cold engine.

Disconnect battery.

⚠ WARNING

Always respect this order for disassembly; disconnect BLACK (-) cable first. Electrolyte or fuel vapors can be present in engine compartment and a spark may ignite them and possibly cause personal injuries.

Remove:

– LH side panel
– radiator cap
– Inlet hose of CVT cover.

Unplug and remove spark plug cable.

Remove spark plug from cylinder head.

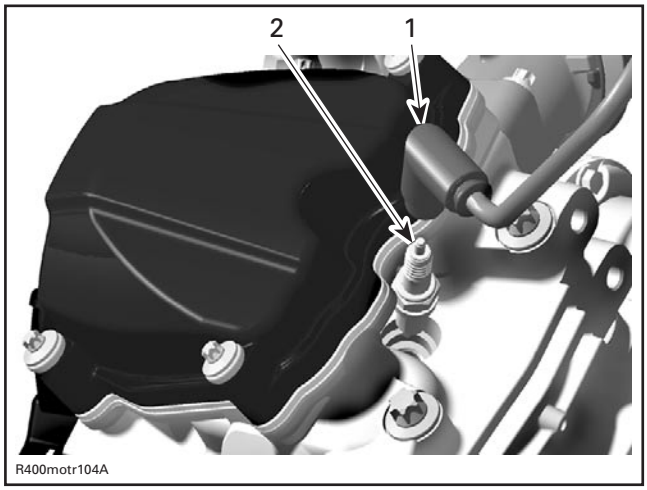

1. *Spark plug cable*
2. *Spark plug*

Remove valve cover (refer to CYLINDER AND HEAD).

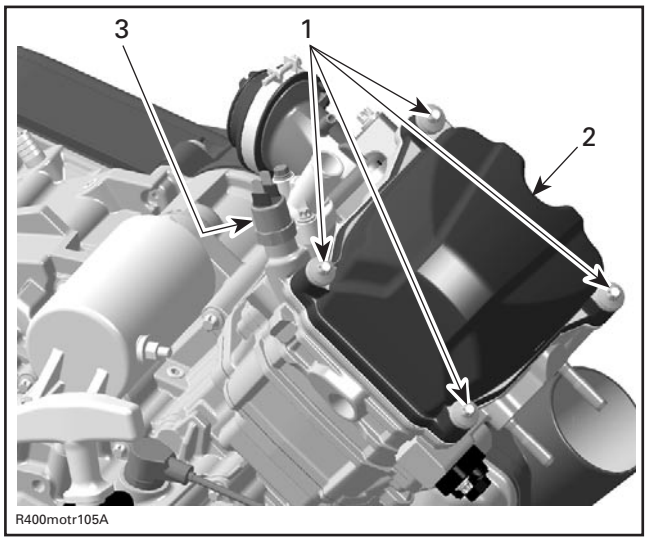

1. *Valve cover screws*
2. *Valve cover*
3. *Oil pressure switch*

https://truckmanualshub.com/

Prepare

Rotate crankshaft until piston is at TDC.

To place piston at ignition TDC, it is possible to use two procedures.

First possible procedure:

– Remove CVT cover. Refer to CVT section.
– Turn the drive pulley until piston is at TDC.

Second possible procedure:

– Using rewind starter, rotate the crankshaft until piston is at ignition TDC.

To fix piston at ignition TDC, it is possible to use two procedures.

First possible procedure:

Lock camshaft using camshaft locking tool (P/N 529 035 926) (refer to CYLINDER AND HEAD).

CAUTION: When removing camshaft screw always lock camshaft using locking tool (P/N 529 035 926) to avoid stretching the timing chain.

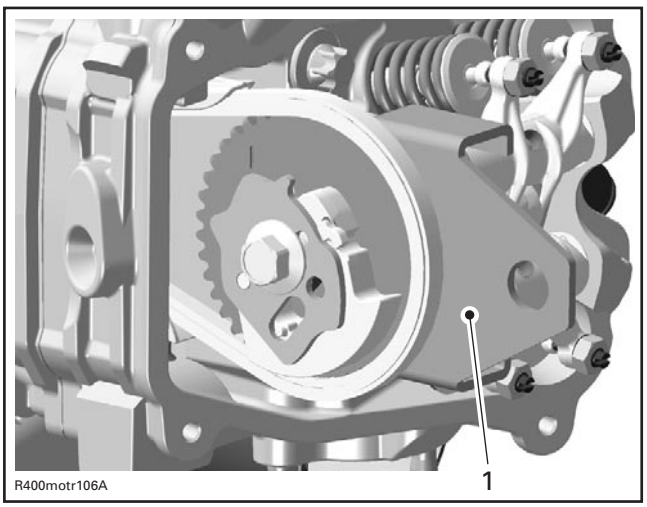

1. Camshaft locking tool

Second possible procedure:

Using crankshaft locking bolt (P/N 529 035 617) for crankshaft fixation at TDC (refer to CRANKSHAFT, see CRANKSHAFT LOCKING PROCEDURE).

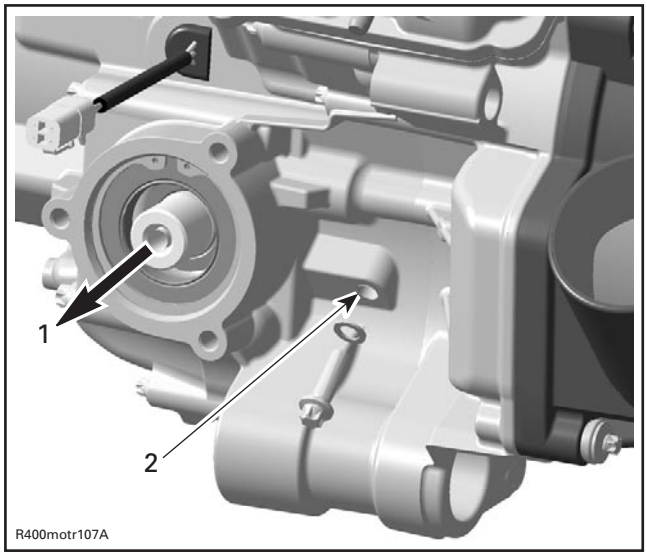

1. Vehicle front side
2. Position for crankshaft locking bolt

Test

Connect to adequate air supply.

Set needle of measuring gauge to zero.

NOTE: Each tester will have specific instruction on the gauge operation and required pressure.

Install gauge adapter into previously cleaned spark plug hole.

Supply combustion chamber with air pressure.

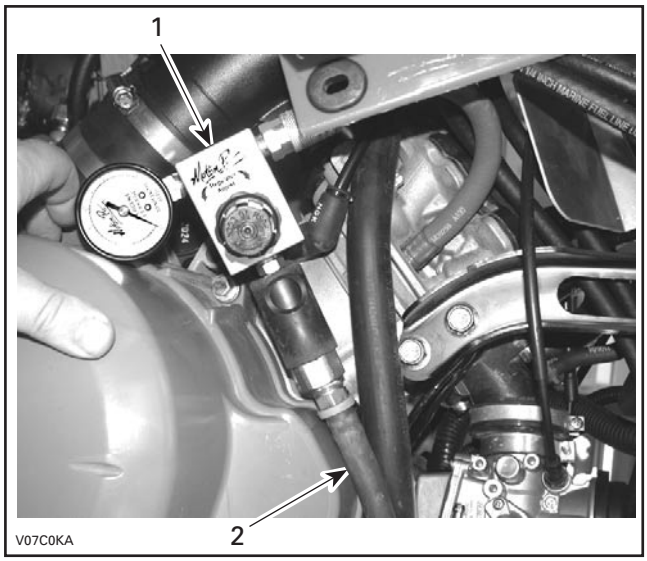

1. Leak tester
2. Air supply hose

https://truckmanualshub.com/

Note the amount of leaking or percentage (depending on tester).

LEAKAGE PERCENTAGE	ENGINE CONDITION
0% to 7%	Excellent condition.
8% to 15%	Fair condition; proceed with tune up or adjustment.
16% to 30%	Poor condition; engine will run and performance might be down in some cases.
31% and higher	Very poor condition; diagnose and repair engine.

Diagnose

Listen for air leaks.

- air escaping on intake port/carburetor means leaking intake valve(s)
- air escaping on exhaust port means leaking exhaust valve(s)
- air bubbles out of radiator means leaking cylinder head gasket
- air/oil escaping from crankcase means damaged gasket and/or loosened screws (refer to GEAR BOX)
- air/coolant escaping from cylinder/head means damaged gasket(s) and/or loosened screws (refer to CYLINDER AND HEAD)
- air escaping into crankcase area means excessively worn cylinder and/or broken piston rings.

NOTE: For all the checkpoints mentioned above see the appropriate engine section to diagnose and repair the engine.

INSTALLATION

NOTE: At reassembly, use the torque values and Loctite products from the exploded views (refer to particular engine sections).

For installation, reverse the preparation procedure.

Install a new valve cover gasket.

https://truckmanualshub.com/

https://truckmanualshub.com/

COOLING SYSTEM

WATER PUMP

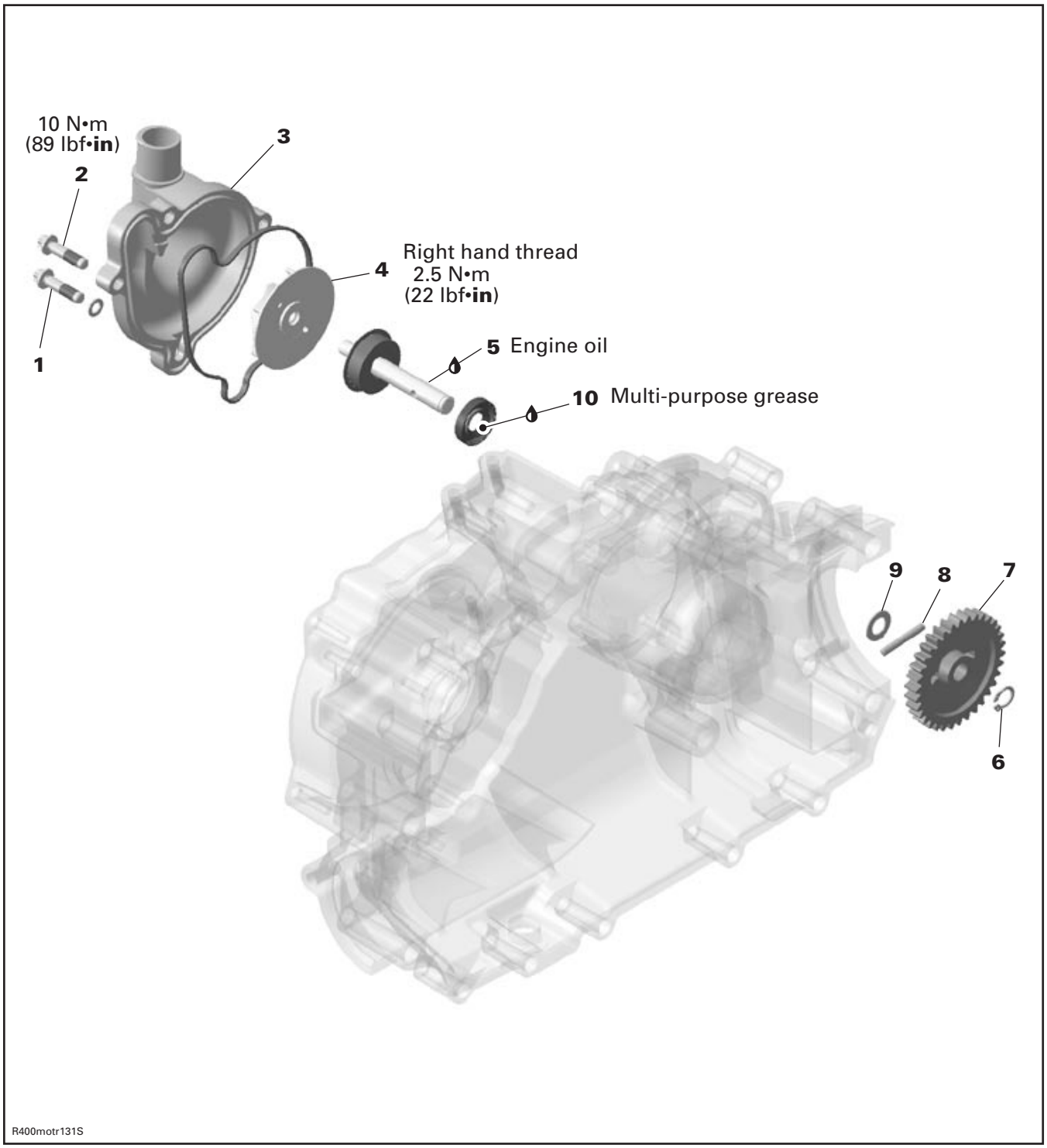

https://truckmanualshub.com/

COOLING SYSTEM

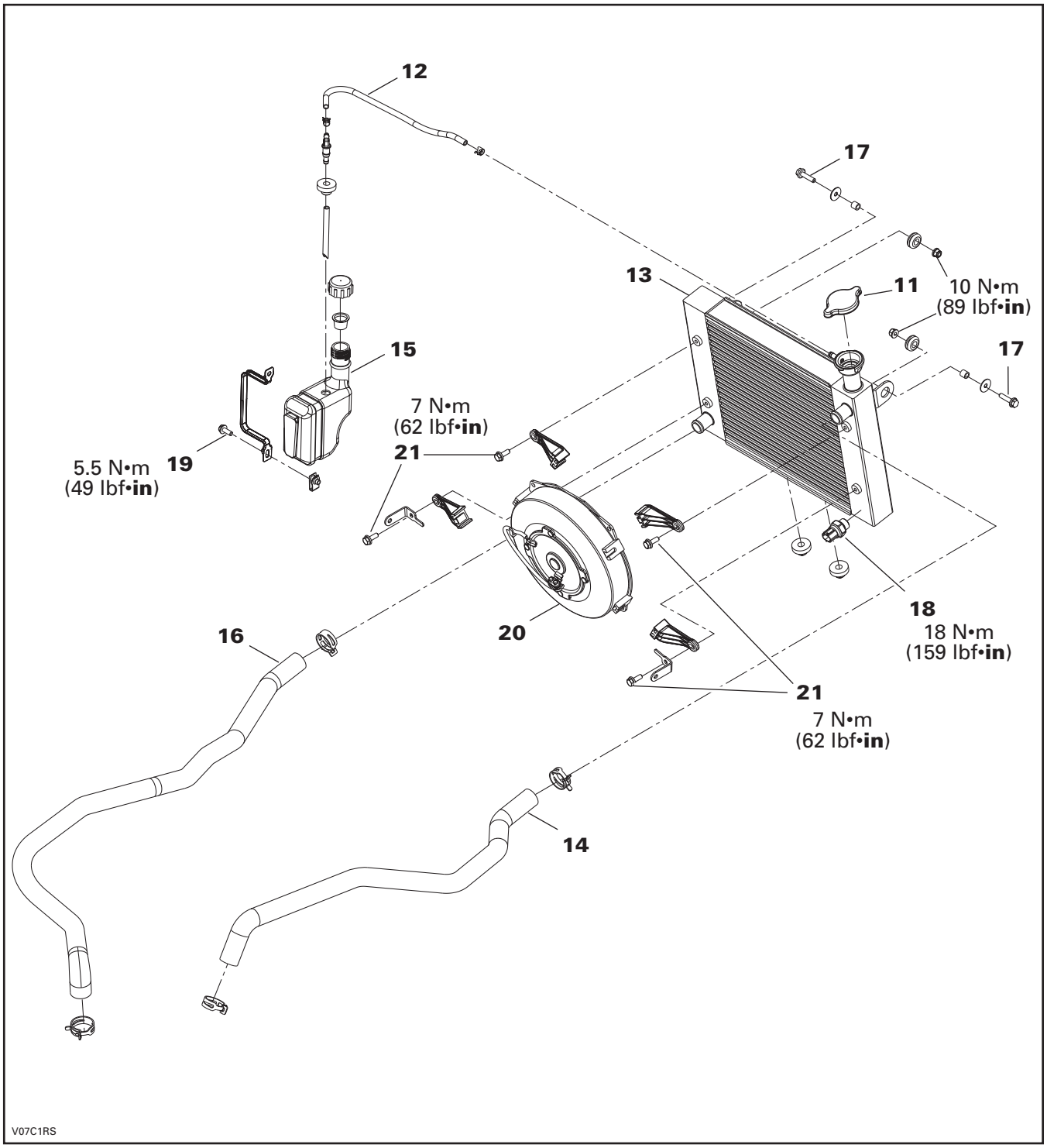

https://truckmanualshub.com/

GENERAL

During assembly/installation, use the torque values and service products as in the exploded views.

Clean threads before applying a threadlocker. Refer to SELF-LOCKING FASTENERS and LOCTITE APPLICATION at the beginning of this manual for complete procedure.

⚠ WARNING

Torque wrench tightening specifications must strictly be adhered to.

Locking devices (ex.: locking tabs, elastic stop nuts, self-locking fasteners, etc.) must be installed or replaced with new ones where specified. If the efficiency of a locking device is impaired, it must be renewed.

COOLING SYSTEM LEAK TEST

⚠ WARNING

To avoid potential burns, do not remove the radiator cap or loosen the engine drain plug if the engine is hot.

Open the access panel and remove the radiator cap **no. 11**.

Install special plug (radiator cap) (P/N 529 021 400) and a hose pincher (P/N 295 000 076) on overflow hose **no. 12**. Pressurize all system through coolant reservoir to 103 kPa (15 PSI).

1. *Hose pincher*
2. *Overflow hose*

1. *Special plug*

Check all hoses, radiator **no. 13** and cylinder/base for coolant leaks. Spray a soap/water solution and look for air bubbles.

INSPECTION

Check general condition of hoses and clamp tightness.

Check the leak indicator hole if there is oil or water.

NOTE: Flowing water indicates a damaged rotary seal **no. 5**. Oil out of the leak indicator hole indicates a non working oil seal **no. 10**.

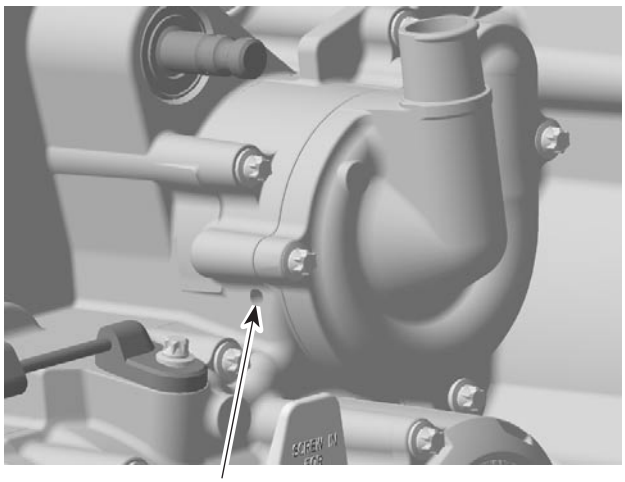

1. *Leak indicator hole*

https://truckmanualshub.com/

DRAINING THE SYSTEM

⚠ WARNING

Never drain or refill cooling system when engine is hot.

To drain cooling system, partially unscrew cooling drain plug **no. 1** on the engine MAG side and remove radiator cap **no. 11**.

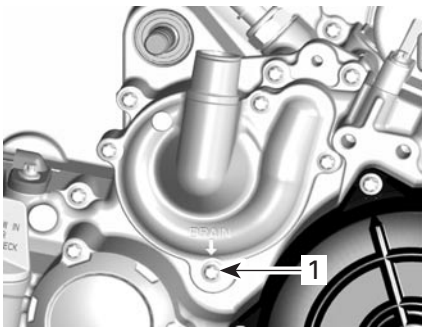

1. Cooling drain plug

CAUTION: If the drain plug is removed completely, pay attention to the gasket ring no. 2. Never use the gasket ring a second time. Always install a new one.

When cooling system is drained completely, screw the cooling drain plug and torque it to 10 N•m (89 lbf•**in**).

COOLANT REPLACEMENT

Recommended Coolant

Use Bombardier premixed coolant (P/N 293 600 038) or a blend of 50% antifreeze with 50% water. Do not reinstall radiator cap.

CAUTION: To prevent rust formation or freezing condition, always replenish the system with the Bombardier premixed coolant or with 50% antifreeze and 50% water. Do not use tap water, straight antifreeze or straight water in the system. Tap water contains minerals and impurities which build up in the system. During cold weather, straight water causes the system to freeze while straight antifreeze thickens and does not have the same efficiency. Always use ethylene glycol antifreeze containing corrosion inhibitors specifically recommended for aluminum engines.

System Capacity

Refer to TECHNICAL DATA.

Coolant Replacement Procedure

⚠ WARNING

To avoid potential burns, do not remove the radiator cap or loosen the engine drain plug if the engine is hot.

Drain the system completely.

Pinch radiator inlet hose **no. 14** between radiator and thermostat housing with a large hose pincher (P/N 529 032 500).

1. Hose pincher

Unscrew bleeding screw on top of thermostat housing.

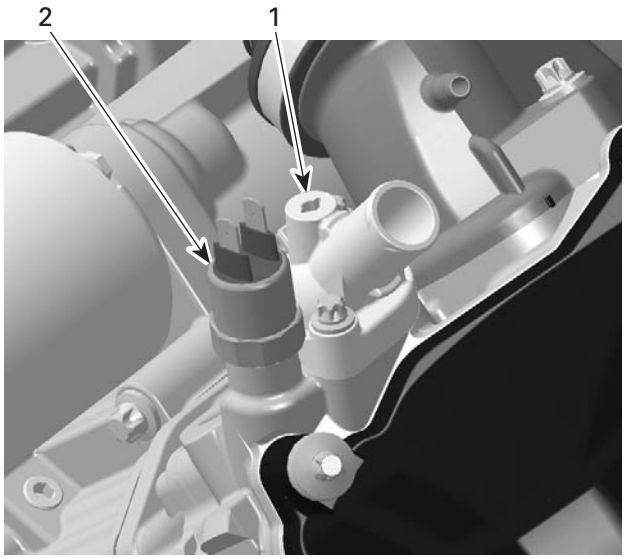

1. Bleeding screw area
2. Water temperature switch

https://truckmanualshub.com/

With vehicle on a flat surface, engine cold, refill radiator **no. 13**. When the coolant comes out by the thermostat housing hole, install the bleeding screw and remove the hose pincher. Install the pressure cap.

NOTE: Do not forget gasket ring when bleeding screw is installed. Torque bleeding screw to 5 N•m (44 lbf•**in**).

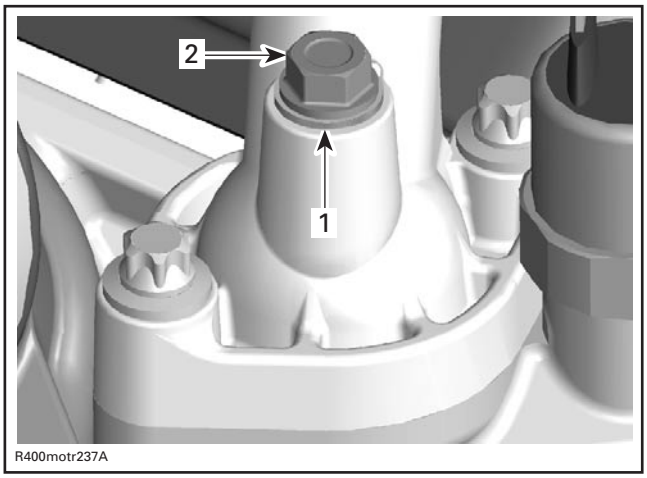

1. *Gasket ring*
2. *Bleeding screw*

Refill coolant tank **no. 15** up to cold level mark. Install the coolant tank cap. Run engine until thermostat opens then stop engine.

When engine has completely cooled down, recheck coolant level in radiator and coolant tank and top up if necessary.

Each year or every 100 hours, check coolant concentration (freezing point) with proper tester.

THERMOSTAT

The thermostat is a single action type.

Removal

NOTE: The thermostat is located on the top of cylinder head, on intake side.

Install a hose pincher on both radiator hoses.

Remove:

– bleeding screw on thermostat cover

– thermostat housing screws and pull thermostat cover

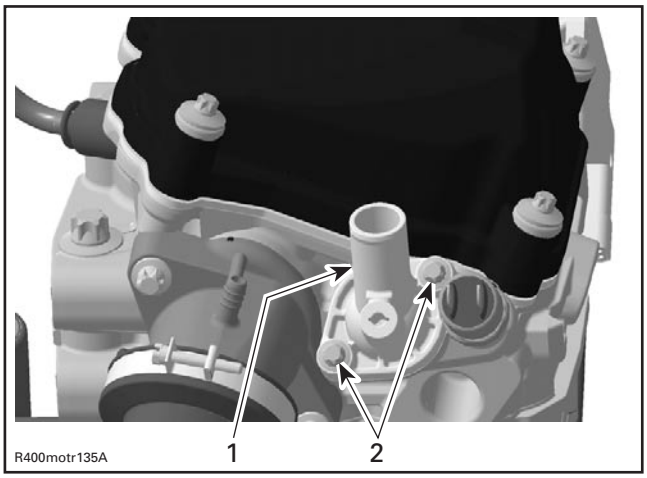

1. *Thermostat cover*
2. *2 screws*

– thermostat with gasket out of the hole.

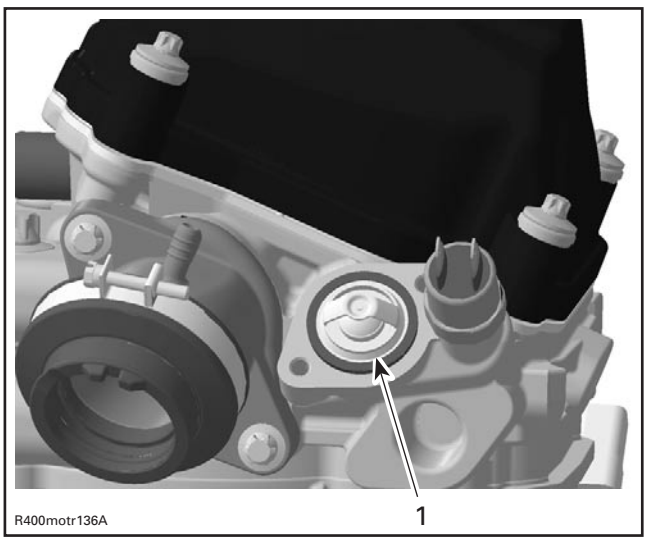

1. *Thermostat with gasket*

Test

To check thermostat, put in water and heat water. Thermostat should open when water temperature reaches 65°C (149°F).

Check if the gasket is not brittle, hard or damaged. If so, replace thermostat and gasket.

Installation

For installation, reverse the removal procedure, pay attention to the following details.

Install the thermostat cover then torque screws to 7 N•m (62 lbf•**in**).

Check coolant level in radiator and coolant tank and top up if necessary.

https://truckmanualshub.com/

WATER TEMPERATURE SWITCH

Removal

NOTE: The temperature switch is located on the top of cylinder head, on intake side.

Install a hose pincher on both radiator hoses.

Unplug the water temperature switch then remove it.

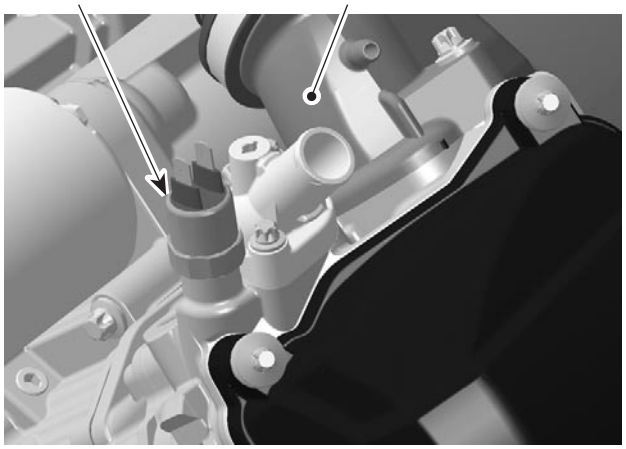

1. Water temperature switch
2. Intake port

Test

To check water temperature switch, put in coolant and heat coolant.

The water temperature switch should operate when coolant temperature reaches 115°C (239°F).

Replace coolant temperature switch if necessary.

Installation

For installation, reverse the removal procedure.

CAUTION: Never use the gasket ring a second time. Always install a new one.

Torque temperature switch to 16 N•m (142 lbf•**in**).

Check coolant level in radiator and coolant tank and top up if necessary.

WATER PUMP HOUSING

It is located on the engine MAG side.

Removal

Drain cooling system.

Remove:

– radiator outlet hose **no. 16**

– screws **no. 1** and **no. 2** retaining water pump housing **no. 3**

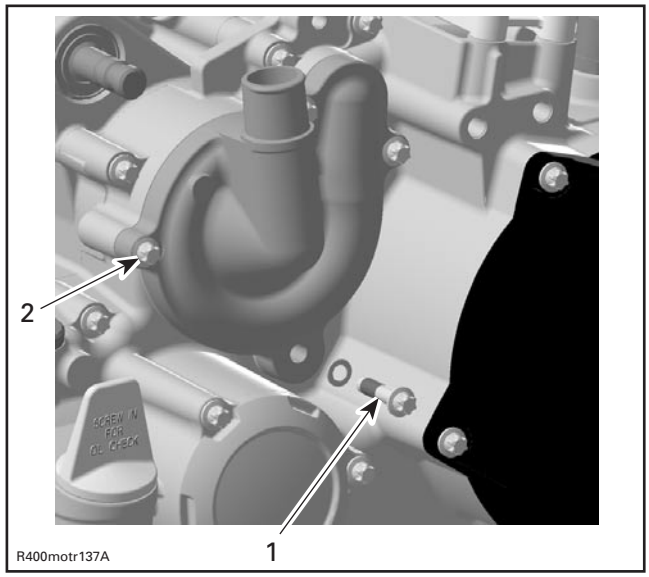

1. Screws M6 x 25 with sealing ring
2. Screws M6 x 25

– water pump housing **no. 3**.

Inspection

Check if gasket is brittle, hard or damaged and replace as necessary.

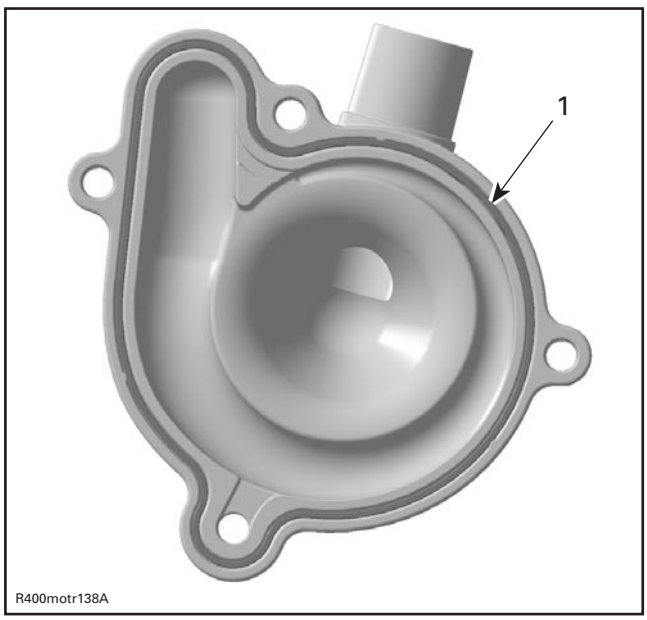

1. Gasket

https://truckmanualshub.com/

Installation

The installation is the opposite of the removal procedure.

CAUTION: To prevent leaking, take care that the gasket is exactly in groove when you reinstall the water pump housing.

Tightening sequence for screws on water pump housing is as per following illustration (criss-cross).

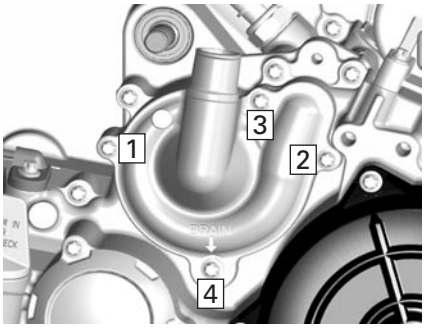

R400motr231B

WATER PUMP IMPELLER

Removal

Remove:

– water pump housing **no. 3**
– impeller **no. 4**.

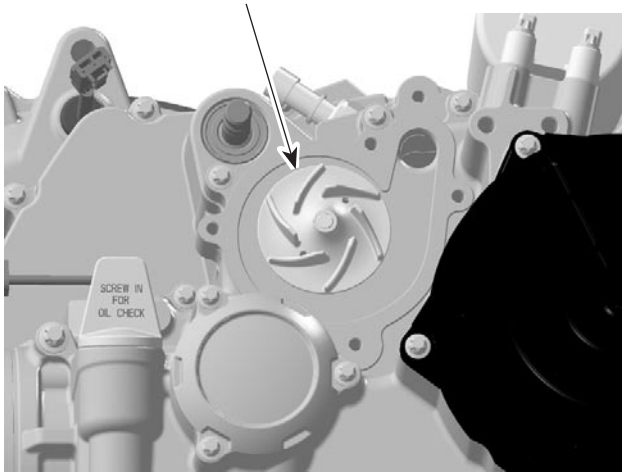

R400motr140A

1. Impeller

CAUTION: Water pump shaft **no. 5** and impeller **no. 4** have right-hand threads. Remove by turning counterclockwise and install by turning clockwise.

Inspection

Check impeller for cracks or other damage. Replace impeller if damaged.

Installation

The installation is the opposite of the removal procedure. Pay attention to the following detail.

CAUTION: Be careful not to damage impeller wings during installation.

WATER PUMP SHAFT

Removal

Remove:

– water pump housing **no. 3**
– impeller **no. 4**
– magneto housing cover
(refer to MAGNETO SYSTEM)
– retaining ring **no. 6** with appropriate pliers

CAUTION: Never use the retaining ring a second time. Always install a new one.

– water pump gear **no. 7**

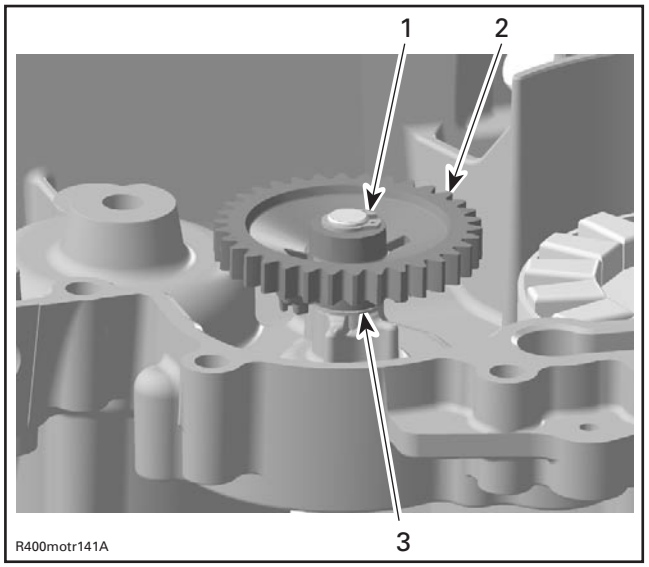

R400motr141A

1. Retaining ring
2. Water pump gear
3. Thrust washer

https://truckmanualshub.com/

NOTE: The water pump gear is held by a needle pin **no. 8** on the water pump shaft.

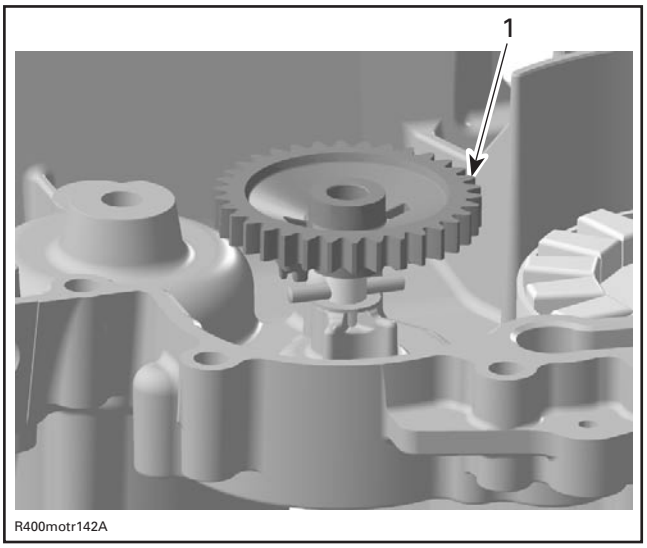

1. Water pump gear

– needle pin **no. 8** and thrust washer **no. 9**.

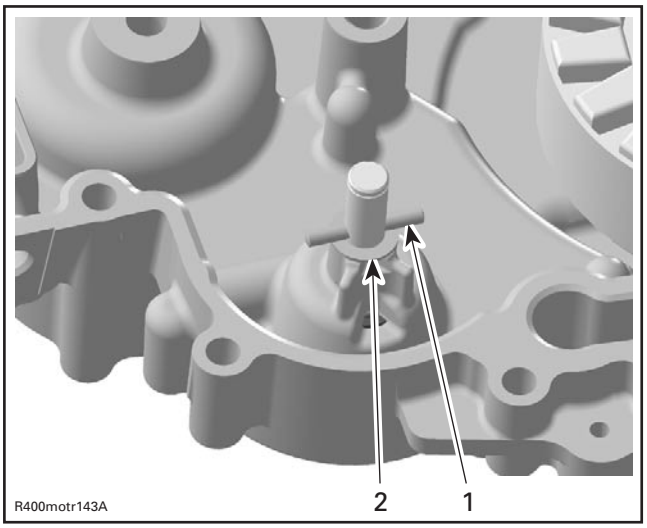

1. Needle pin
2. Thrust washer

CAUTION: When removing water pump shaft, always replace rotary seal with water pump shaft **no. 5** and oil seal **no. 10** (behind rotary seal).

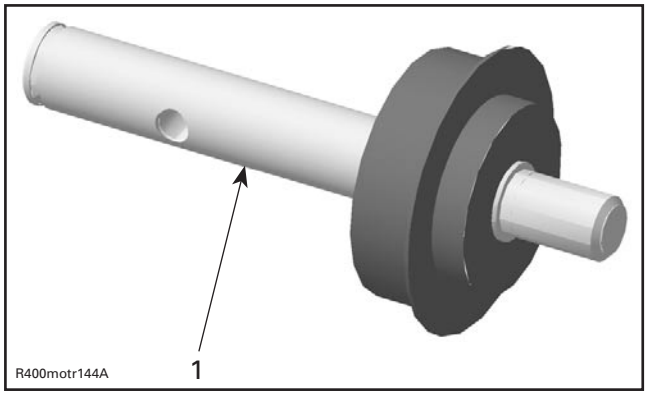

1. Water pump shaft with rotary seal

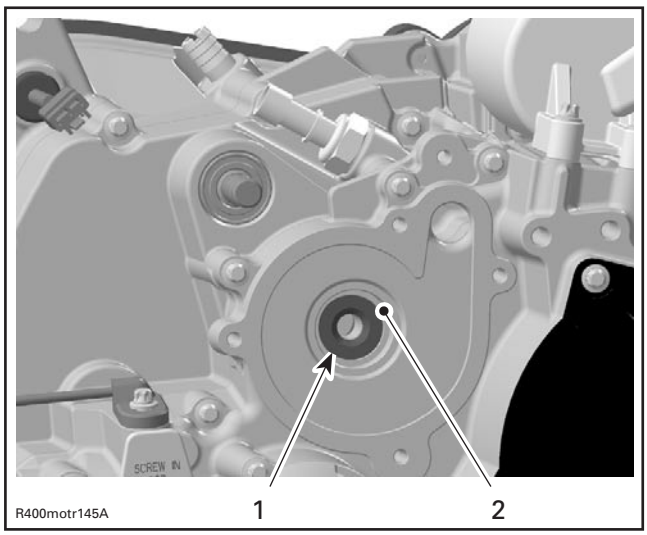

1. Oil seal behind the rotary seal
2. Rotary seal bore

Extract the water pump shaft with rotary seal **no. 5** together with oil seal **no. 10** from inside magneto housing cover with a pusher.

CAUTION: Be careful not to damage the surface of the rotary seal bore in magneto housing cover.

https://truckmanualshub.com/

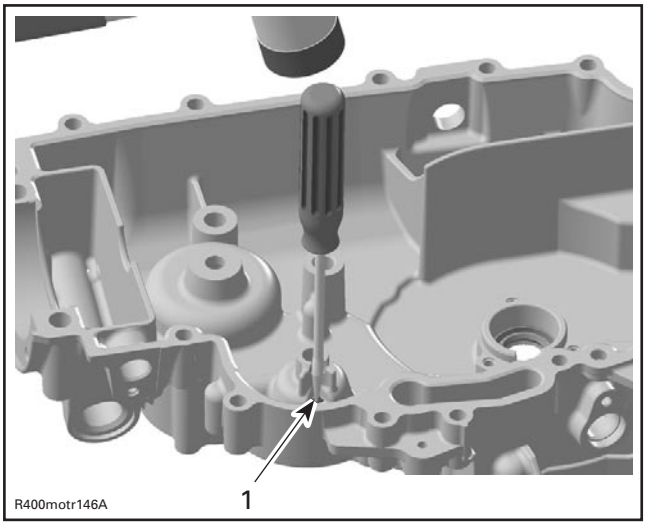

1. Special area for oil seal removal

Inspection

Inspect water pump gear for wear and damage on the snap mechanism to the needle pin. Replace if damaged.

Water pump shaft with rotary seal must rotate freely. Otherwise, replace it.

NOTE: When removing water pump shaft, always replace together retaining ring, oil seal, water pump shaft with rotary seal with new parts.

Installation

For installation, reverse the removal procedure. However, pay attention to the following.

NOTE: Never use oil in the press fit area of the oil seal and rotary seal.

Push water pump shaft oil seal in place by using the oil seal pusher (P/N 529 035 757).

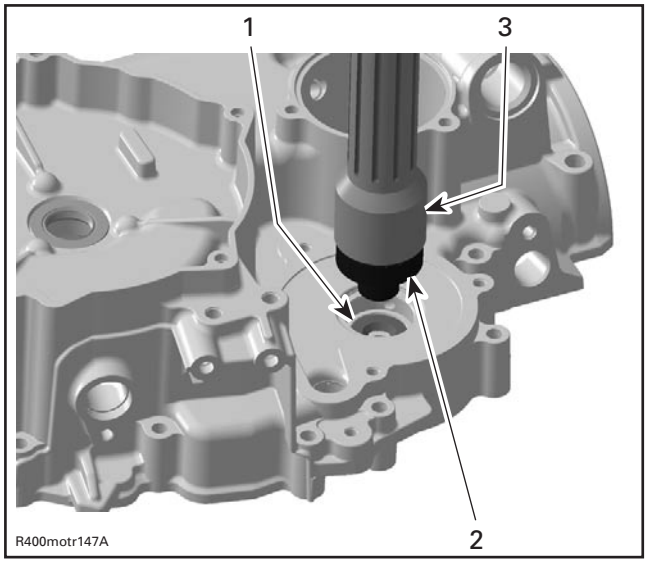

1. Oil seal for the water pump shaft
2. Oil seal pusher (P/N 529 035 757)
3. Handle for insertion jig (P/N 420 877 255)

It is recommended to install the water pump shaft assembly using the water pump ceramic seal installer (P/N 529 035 766).

NOTE: The water pump shaft assembly has to be pushed using the outside area of the rotary seal.

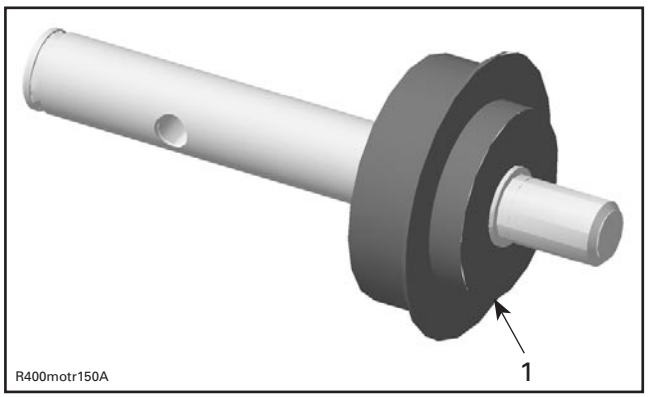

1. Surface to push water pump shaft assembly in place

CAUTION: Never use a hammer for the rotary seal installation. Only use a press to avoid damaging the ceramic component.

https://truckmanualshub.com/

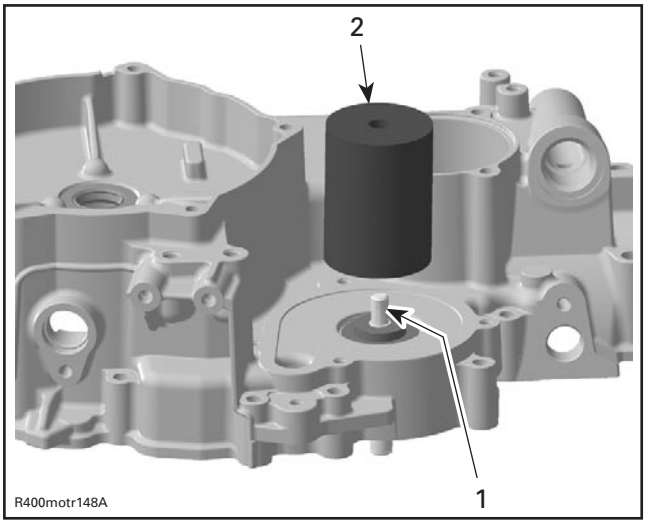

1. Water pump shaft with rotary seal
2. Water pump ceramic seal installer (P/N 529 035 766)

NOTE: For installation use the torque values in the exploded view. Ensure to use multi-purpose grease for oil seal **no. 10** and engine oil in water pump shaft bore/shaft.

Tighten screws in the following sequence.

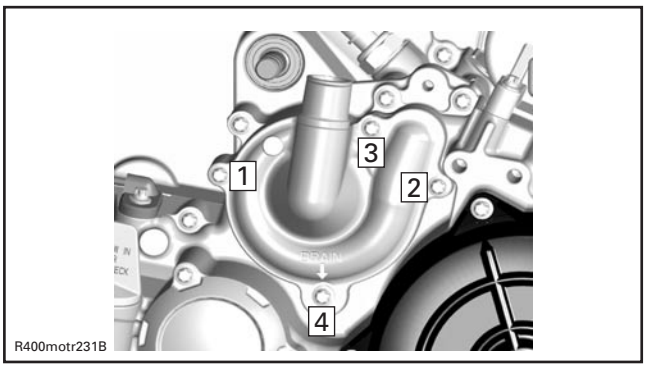

PRESSURE CAP

Check if radiator cap **no. 11** pressurizes the system. If not, install a new 110 kPa (16 PSI) cap (do not exceed this pressure).

RADIATOR

Removal

Drain cooling system.

Remove:

– front facia and both inner fenders (refer to BODY)
– radiator inlet **no. 14** and radiator outlet **no. 16** hoses

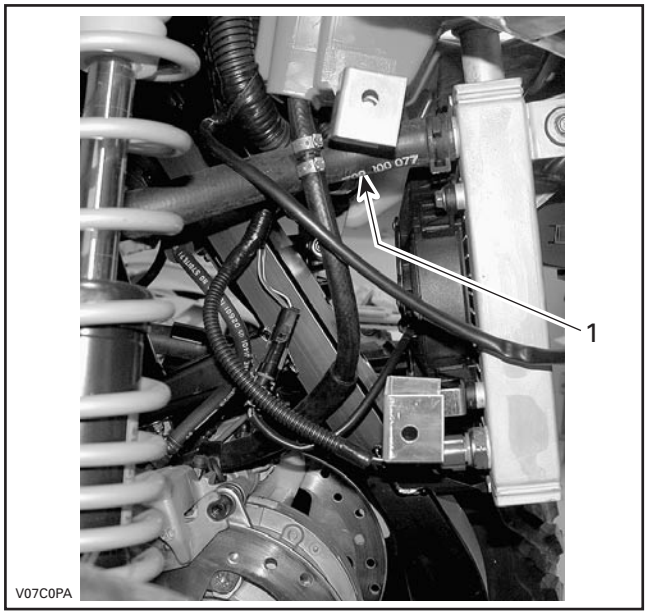

1. Radiator inlet hose

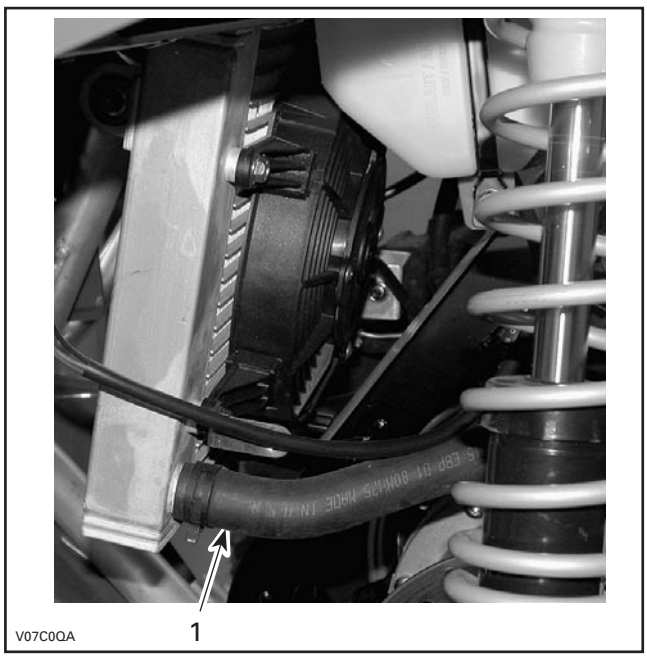

1. Radiator outlet hose

– overflow hose **no. 12**
– mounting bolts **no. 17**.

https://truckmanualshub.com/

1. Radiator mounting bolts

Unplug temperature sender connector **no. 18** then remove the radiator **no. 13**.

Inspection

Check radiator air passage for clogging or damage.

Remove insects, mud or other obstructions with compressed air or low pressure water.

Check for any coolant leakage from radiator and hoses.

Installation

For installation, reverse the removal procedure. Pay attention to the following detail.

Fill up the radiator. Refer to the COOLANT REPLACEMENT PROCEDURE, at the beginning of this section.

COOLANT TANK

Overflow Coolant Tank

The coolant expands as the temperature (up to 100 - 110°C (212 - 230°F)) and pressure rise in the system. If the limiting system working pressure cap is reached 110 kPa (16 PSI), the pressure relief valve in the pressure cap is lifted from its seat and allows coolant to flow through the overflow hose into the overflow coolant tank **no. 15**.

Removal

Remove:

– LH inner fender (refer to BODY)

– coolant tank support bolt **no. 19**

– overflow hose **no. 12**

– coolant tank **no. 15**.

Empty coolant tank.

Installation

The installation is the reverse of the removal procedure.

COOLING FAN

Test

NOTE: No key required for this test.

Unplug the temperature sender connector.

Install a jumper wire end in connector. Replace the cooling fan **no. 20** if it does not work.

Removal

Remove both inner fenders. Refer to BODY.

Unplug cooling fan connector.

Remove bolts **no. 21**.

Remove the cooling fan.

Installation

For the installation, reverse the removal procedure.

https://truckmanualshub.com/

TEMPERATURE SENDER

Test

Remove temperature sender **no. 18**, see below for procedure.

Put the temperature sender in water and heat water.

Using a multimeter, check the resistance from temperature sender. Temperature sender should open when water temperature reaches the following degree.

WATER TEMPERATURE	85°C (185°F)

Change temperature sender if resistance does not change when water temperature is equal or over specification.

Removal

Drain coolant.

Remove the LH inner fender (refer to BODY).

Unplug temperature sender connector.

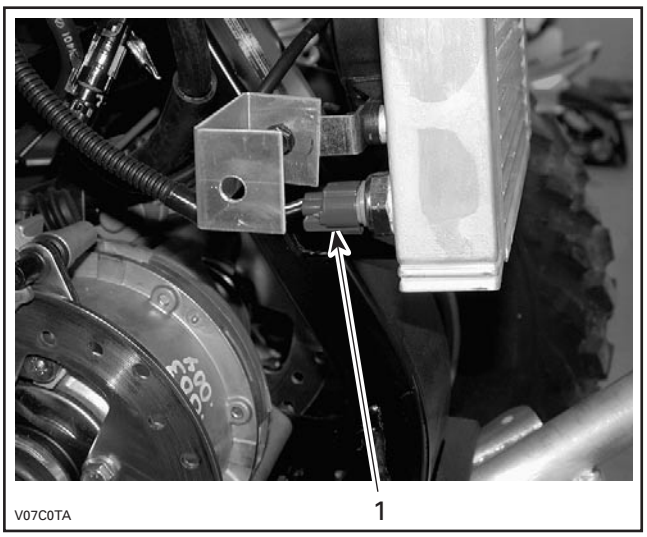

1. Temperature sender connector

Unscrew temperature sender **no. 18**.

Installation

The installation is the reverse of the removal procedure, pay attention to the following details.

Check O-ring and change if necessary.

CAUTION: Do not apply any product on the threads or on the O-ring.

https://truckmanualshub.com/

MAGNETO SYSTEM

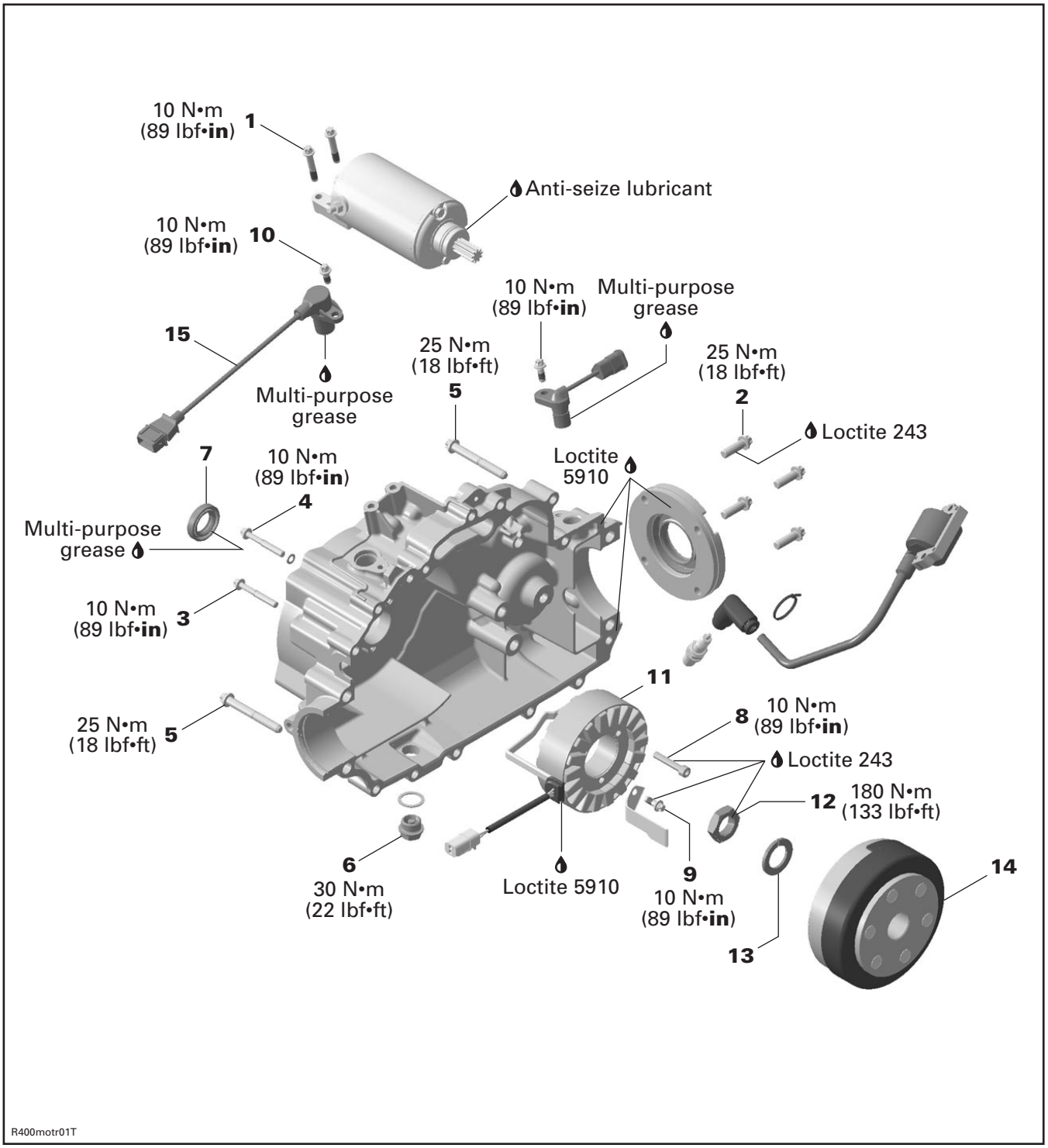

https://truckmanualshub.com/

GENERAL

The engine removal is necessary to work on magneto components except for the CPS (Crankshaft Position Sensor) and oil seal.

Always perform the electric tests before removing or installing whatever component.

During assembly/installation, use the torque values and service products as in the exploded views.

Clean threads before applying a threadlocker. Refer to SELF-LOCKING FASTENERS and LOCTITE APPLICATION at the beginning of this manual for complete procedure.

⚠ WARNING

Torque wrench tightening specifications must strictly be adhered to.

Locking devices (ex.: locking tabs, elastic stop nuts, self-locking fasteners, cotter pin, etc.) must be installed or replaced with new ones where specified. If the efficiency of a locking device is impaired, it must be renewed.

MAGNETO HOUSING COVER

Removal

Remove engine from vehicle.

Remove disconnect unit.

Lock crankshaft at TDC (refer to CYLINDER AND HEAD).

Remove:

– rewind starter (refer to REWIND STARTER)

– water pump cover (refer to COOLING SYSTEM)

– electric starter screws **no. 1**

– screws **no. 2** holding output shaft cover in place

NOTE: Only remove the two front screws **no. 2**. To ease lifting the magneto cover it is recommended to loosen the screws behind.

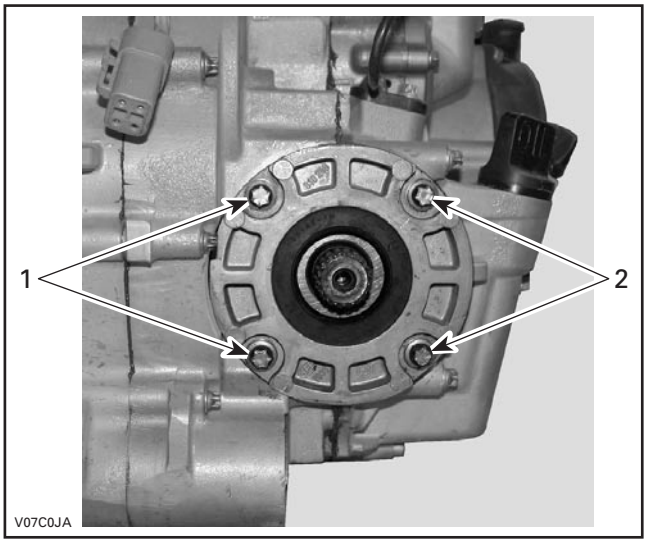

1. Unscrew these screws
2. Remove these screws

– screws **nos. 3**, **4** and **5**

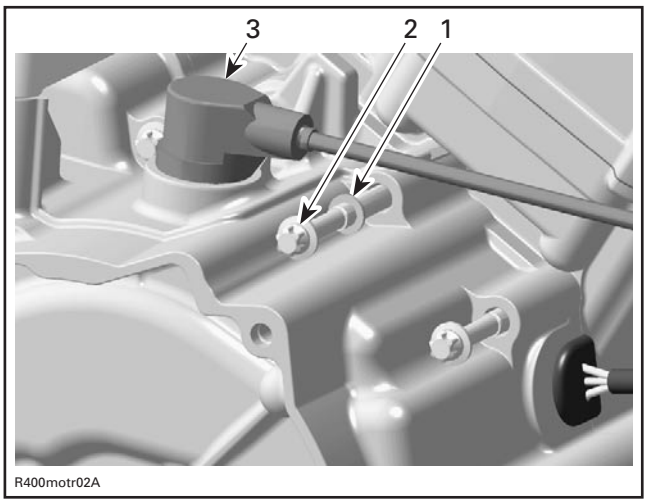

1. Gasket ring
2. Screw M6
3. CPS (Crankshaft Position Sensor)

– magneto housing cover **no. 6**.

NOTE: Lift the magneto housing cover from the provided area using two flat screwdrivers prying equally at the same time.

https://truckmanualshub.com/

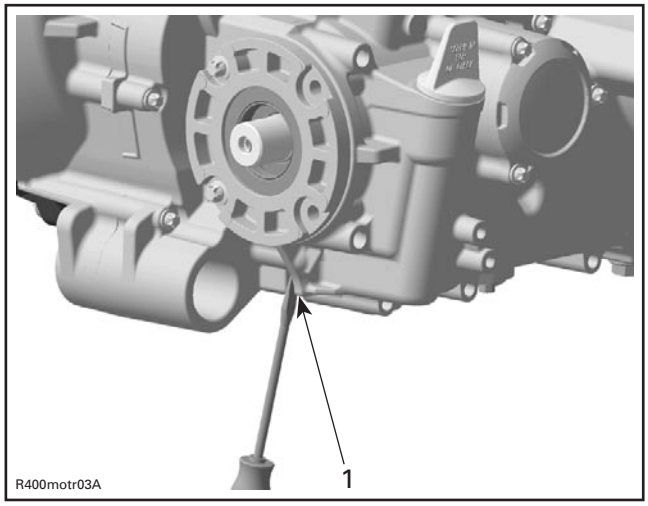

1. Special area for removal of magneto housing cover

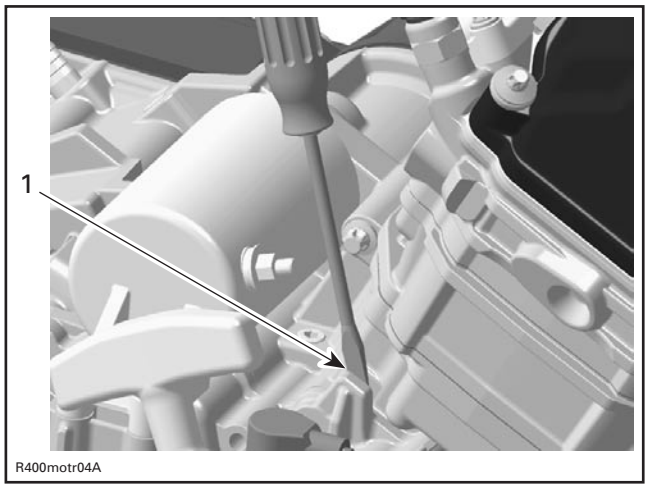

1. Special area for removal of magneto housing cover

Inspection

Check magneto housing cover for cracks or other damages. Replace if necessary.

Installation

NOTE: Clean all metal component in a non-ferrous metal cleaner. Use Bombardier gasket remover (P/N 413 708 500), or suitable equivalent. To remove remaining Loctite 5910 on the contact surface, use a copper brush.

⚠ WARNING

Wear safety glasses and work in a well ventilated area when working with strong chemical products. Also wear suitable non-absorbent gloves to protect your hands.

For installation, reverse the removal procedure. However, pay attention to the following.

IMPORTANT: When beginning the application of the crankcase sealant, the assembly and the first torquing should be done within 10 minutes. It is suggested to have all you need on hand to save time.

NOTE: It is recommended to apply this specific sealant as described here to get an uniform application without lumps. If you do not use the roller method, you may use your finger to uniformly distribute the sealant (unlike the Drei Bond sealing compound, using a finger will not affect the adhesion).

Use the silicone-based Loctite 5910 (P/N 293 800 081) on mating surfaces.

NOTE: The sealant curing time is similar to the Loctite 518 without using the Primer N.

CAUTION: Do not use Loctite 515 or 518 to seal crankcase. Do not use Loctite Primer N with the Loctite 5910. Using these products or non silicone-based sealant over a previously sealed housing with Loctite 5910 will lead to poor adhesion and possibly a leaking housing. These products are chemically incompatible. Even after cleaning, the Loctite 5910 would leave incompatible microscopic particles.

Use a plexyglass plate and apply some sealant on it. Use a soft rubber roller (50 - 75 mm (2 - 3 in)) (available in arts products suppliers for printmaking) and roll the sealant to get a thin uniform coat on the plate (spread as necessary). When ready, apply the sealant on magneto mating surfaces.

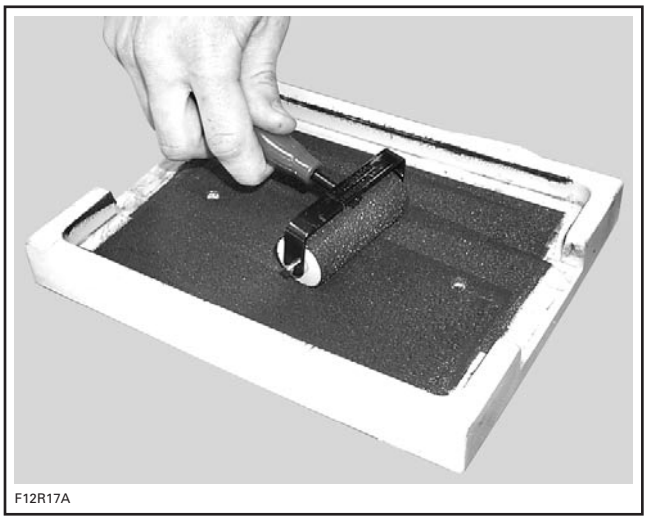

Do not apply in excess as it will spread out inside crankcase.

https://truckmanualshub.com/

NOTE: Do not use Loctite Primer N with this sealant. The sealant curing time is similar to the Loctite 518 without using the Primer N, which is 4 to 24 hours.

CAUTION: Apply Loctite 5910 all around the crankcase MAG slit surface except the areas described below.

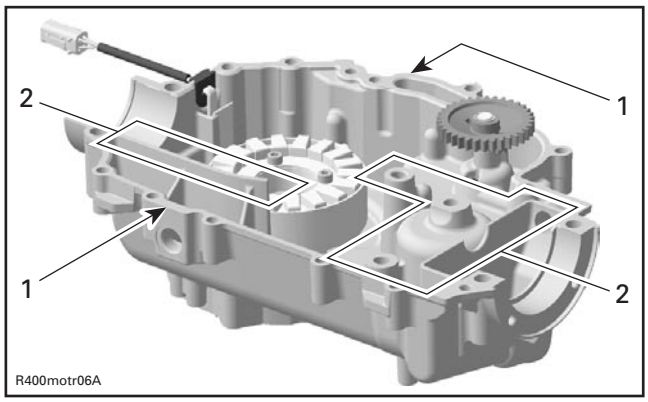

1. *Mating surface on the magneto housing cover*
2. *No need to apply Loctite 5910*

CAUTION: Ensure the sealing ring is present on the crankcase mag side. Use oil seal protector (P/N 529 035 935) to avoid damaging the oil seal during reinstallation of the magneto housing cover.

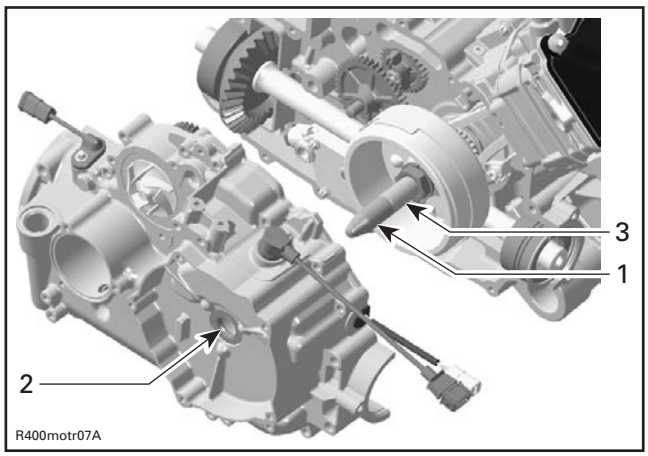

1. *Oil seal protector*
2. *Magneto housing cover*
3. *Crankshaft MAG side*

Refer to the following illustration for proper installation of screws.

CAUTION: Never use the gasket ring on screw no. 4 a second time. Always install a new one.

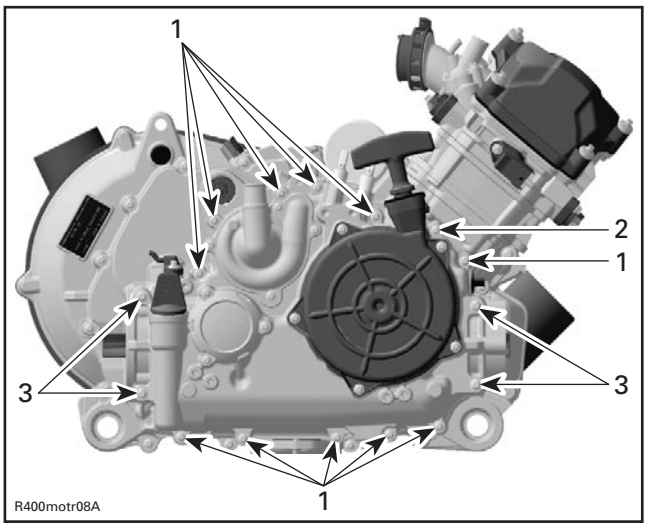

1. *Screws M6 x 45*
2. *Screws M6 x 45 with sealing ring*
3. *Screws M8 x 65*

Tightening sequence for screws on magneto housing cover is as per following illustration.

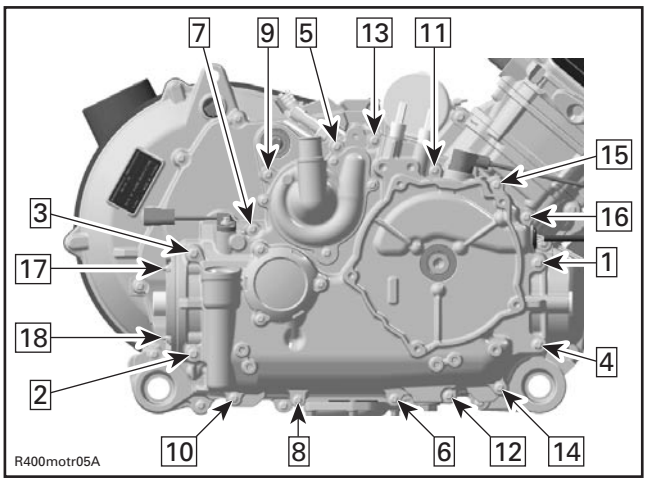

OIL SEAL

Remove rewind starter (refer to REWIND STARTER).

Inspection

Check the oil seal **no. 7** on the magneto housing cover. If brittle, hard or damaged, replace it.

Removal

NOTE: The oil seal **no. 7** can be removed even if the cover is not removed.

Pry out oil seal with a screwdriver.

CAUTION: Be careful not to damage the oil seal bore when using a screwdriver.

https://truckmanualshub.com/

Installation

With Magneto Housing Cover Removed

Using the oil seal installer (P/N 529 035 759) and the inserting jig handle (P/N 420 877 650), install the oil seal in its location.

NOTE: Never use oil in the press fit area of oil seal.

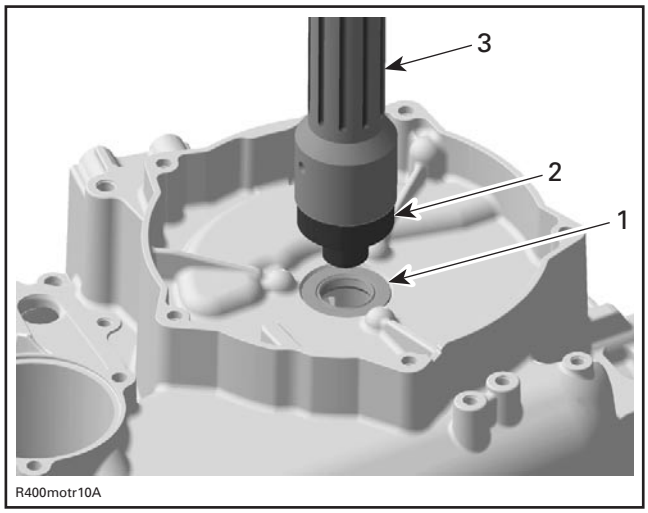

1. *Oil seal*
2. *Oil seal installer (P/N 529 035 759)*
3. *Handle for insertion jig (P/N 420 877 650)*

Reinstall other removed parts in the reverse order.

CAUTION: Always use the oil seal protector (P/N 529 035 935) to avoid damaging the oil seal during magneto housing cover installation.

Without Magneto Housing Cover Removed

Using a suitable tube, with the proper diameter, install the oil seal as per following illustration.

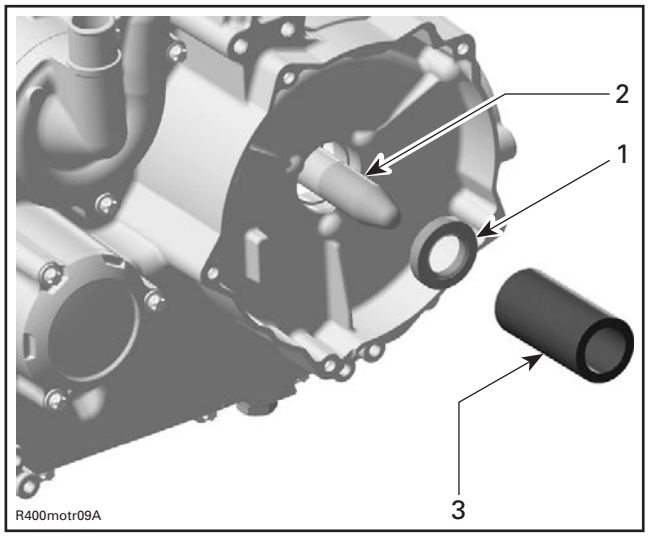

1. *Oil seal*
2. *Oil seal protector*
3. *Tube*

CAUTION: Use the oil seal protector (P/N 529 035 935) to avoid damaging the oil seal during installation.

STATOR

Removal

Remove:

– magneto housing cover **no. 6**
– screws **nos. 8** and **9**
– stator **no. 11**.

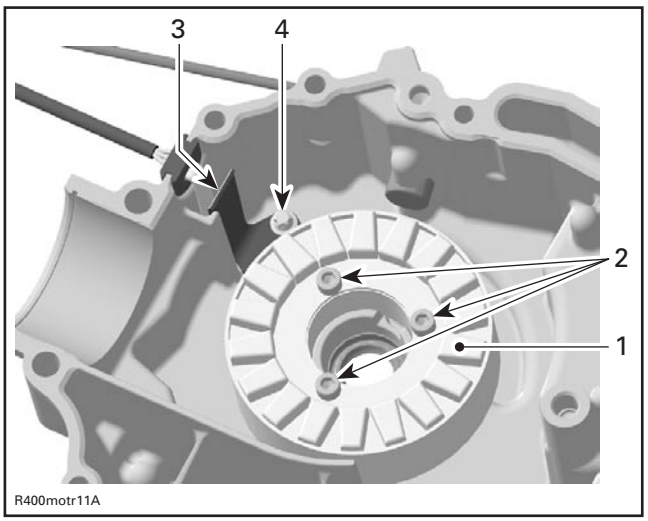

1. *Stator*
2. *Stator screws*
3. *Holding strip*
4. *Holding strip screw*

Inspection

Check stator condition. If damaged replace it.

For electrical inspection, refer to CHARGING SYSTEM.

Installation

For installation, reverse the removal procedure. However, pay attention to the following.

CAUTION: When installing the stator take care that the cable is in place (guide for the wire).

https://truckmanualshub.com/

NOTE: There is only one position for the stator (notch in the magneto housing cover).

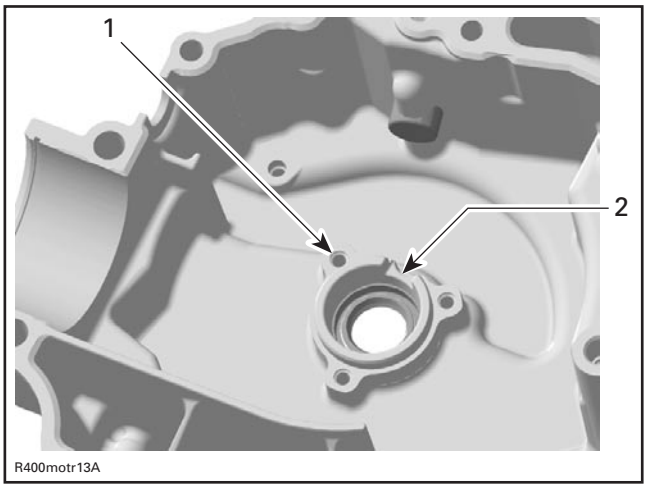

1. *Thread for cable holding strip*
2. *Notch for stator*

CPS (Crankshaft Position Sensor)

The CPS is located on the top of magneto housing cover, behind the exhaust pipe support.

Removal

Lift up the console (refer to BODY) then unplug the CPS connector.

Remove the RH side panel.

Unscrew the CPS screw **no. 10**.

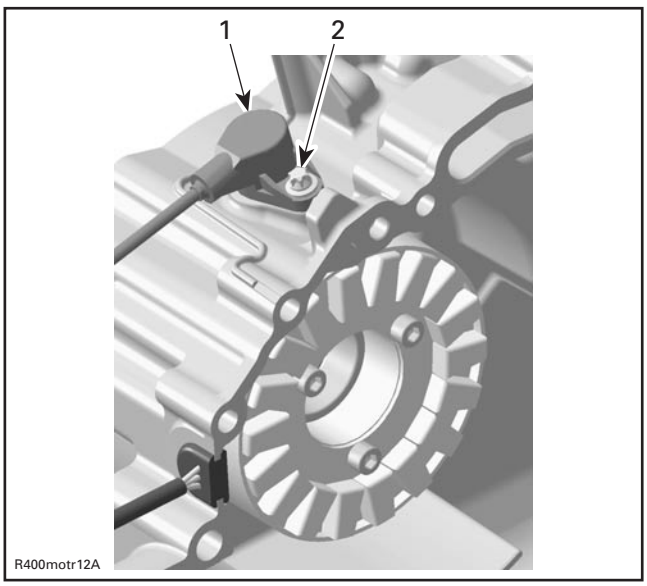

1. *Crankshaft position sensor*
2. *Screw*

Remove the CPS **no. 15**.

Inspection

Check the CPS condition and replace it if necessary.

To test the sensor refer to IGNITION SYSTEM.

Installation

For installation, reverse the removal procedure.

ROTOR

Removal

Lock crankshaft with locking bolt (P/N 529 035 617). Refer to CRANKSHAFT/BALANCER SHAFT.

Remove:

– magneto housing cover **no. 6**
– nut **no. 12** retaining rotor **no. 14**
– serrated washer **no. 13**.

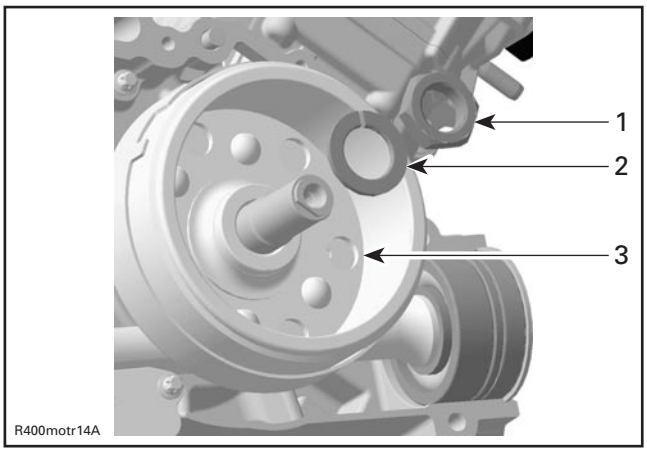

1. *Nut*
2. *Serrated washer*
3. *Rotor*

Install magneto puller (P/N 529 035 748) and crankshaft protector (P/N 420 876 557) then remove rotor.

NOTE: Use grease to place protector on crankshaft end prior to screw on the magneto puller.

Inspection

Check woodruff key and keyway on the crankshaft and the serrated washer for wear or damages. Replace as necessary.

Installation

For installation, reverse the removal procedure. However, pay attention to the following.

CAUTION: When installing the rotor, take care that the tapers are clean. Serrated washer no. 13 has to be put in place correctly.

https://truckmanualshub.com/

LUBRICATION SYSTEM

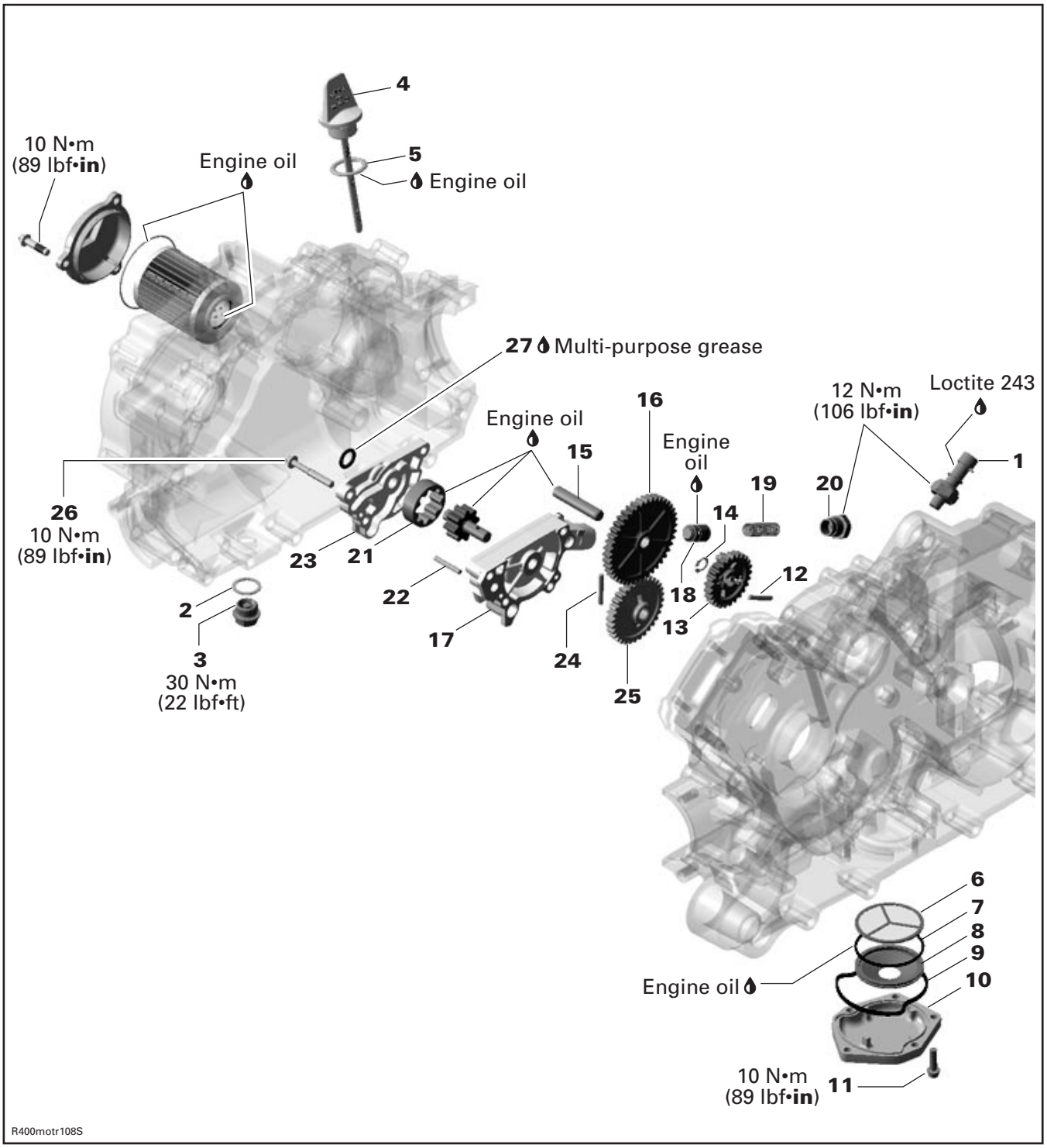

https://truckmanualshub.com/

GENERAL

Prior to change the oil, ensure vehicle is on a level surface.

Oil and oil filter must be replaced at the same time. Oil change and oil filter replacement should be done with a warm engine.

⚠ WARNING

The engine oil can be very hot. Wait until engine oil is warm.

During assembly/installation, use the torque values and service products as in the exploded views.

Clean threads before applying a threadlocker. Refer to SELF-LOCKING FASTENERS and LOCTITE APPLICATION at the beginning of this manual for complete procedure.

⚠ WARNING

Torque wrench tightening specifications must strictly be adhered to.

Locking devices (ex.: locking tabs, elastic stop nuts, self-locking fasteners, cotter pin, etc.) must be installed or replaced with new ones where specified. If the efficiency of a locking device is impaired, it must be renewed.

Dispose oil and filter as per your local environmental regulations.

ENGINE OIL PRESSURE TEST

NOTE: The engine oil pressure test should be done with a **warm engine** and the **recommended oil**.

Remove the oil pressure switch **no. 1** in the area of the cylinder head (exhaust side), mounted on the crankcase MAG side and install the oil pressure gauge (P/N 529 035 652).

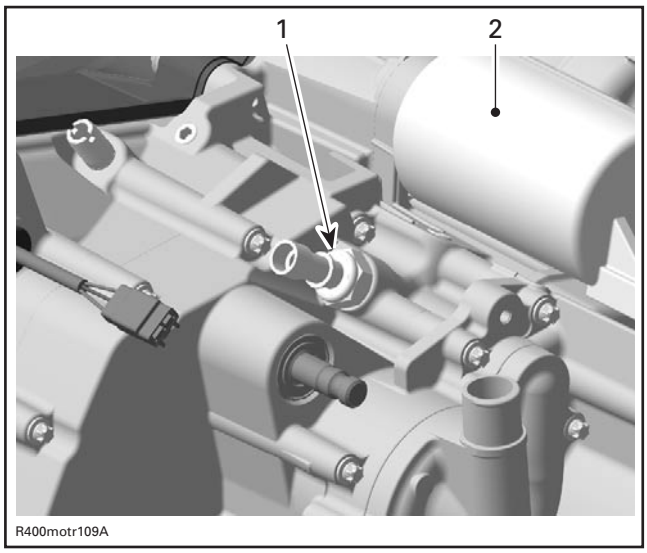

1. Oil pressure switch
2. Electrical starter

NOTE: Oil pressure switch works between 30 kPa (4 PSI) and 60 kPa (9 PSI).

The engine oil pressure should be within the following values.

PRESSION/RPM	1300 RPM	6000 RPM
MINIMAL	70 kPa (10 PSI)	350 kPa (51 PSI)
NOMINAL	**350 kPa (51 PSI)**	**500 kPa (73 PSI)**
MAXIMAL	550 kPa (80 PSI)	700 kPa (102 PSI)

If the engine oil pressure is out of specifications, check the points described in TROUBLESHOOTING section.

To install oil pressure switch, reverse the removal procedure.

https://truckmanualshub.com/

OIL CHANGE

Removal

Place a drain pan under the engine magnetic drain plug area.

Clean the magnetic drain plug area.

Unscrew magnetic drain plug **no. 3** then remove dipstick **no. 4**.

CAUTION: Pay attention not to lose the O-ring **no. 5** on dipstick.

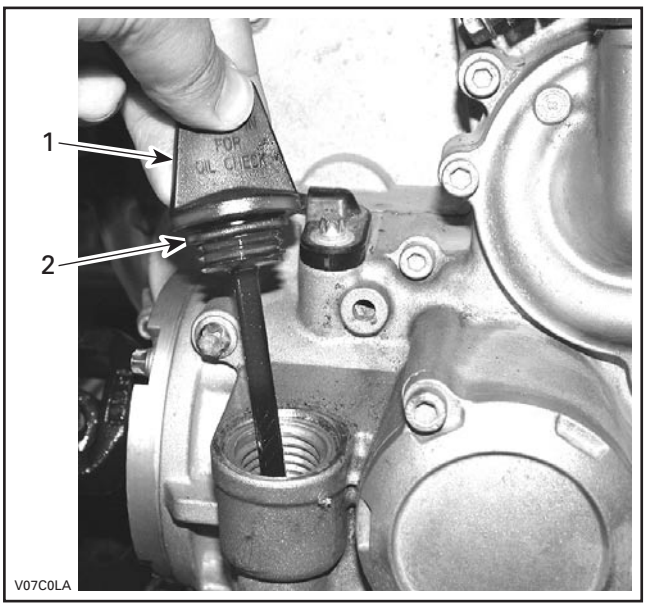

1. *Dipstick*
2. *O-ring*

Wait a while to allow oil to flow out of oil filter.

Inspection

Oil condition gives information about the engine condition. See TROUBLESHOOTING section.

Clean the magnetic drain plug from metal shavings and dirt. Presence of debris gives an indication of failure inside the engine. Check engine to correct the problem.

Change gasket ring on magnetic drain plug if damaged.

Installation

The installation is the reverse of removal procedure.

CAUTION: Never use the gasket ring **no. 2** a second time. Always replace by a new one.

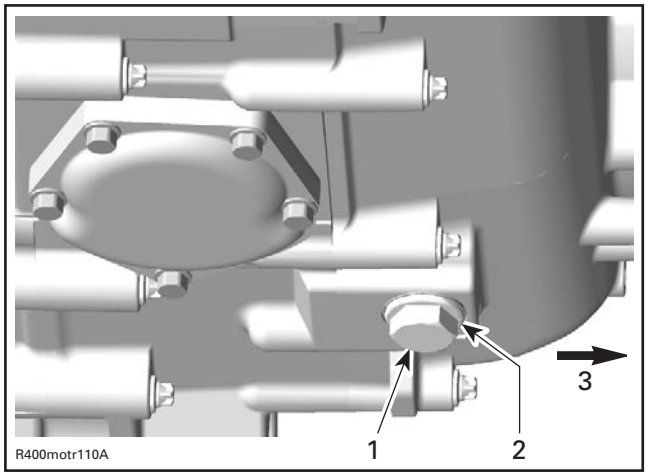

1. *Magnetic drain plug*
2. *Gasket ring*
3. *Engine MAG side*

System Capacity

Refer to TECHNICAL DATA.

OIL FILTER

Removal

Remove:

- engine oil (refer to OIL CHANGE)
- oil filter screws
- oil filter cover
- oil filter.

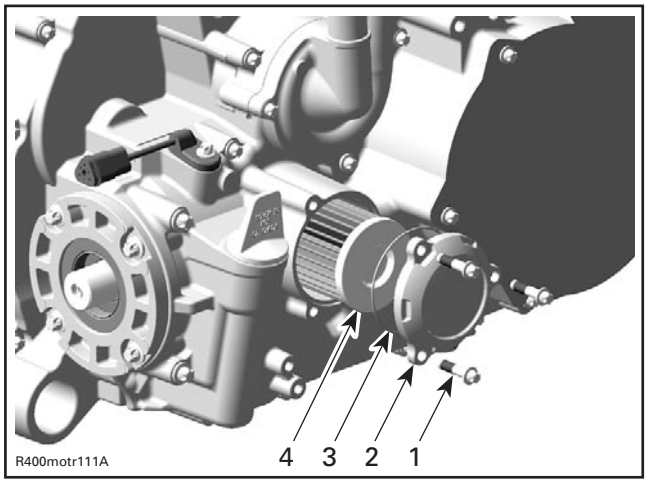

1. *Oil filter screws*
2. *Oil filter cover*
3. *O-ring*
4. *Oil filter*

https://truckmanualshub.com/

Inspection

Check oil filter cover O-ring, change it if necessary.

Check and clean the oil filter inlet and outlet area for dirt and other contaminations.

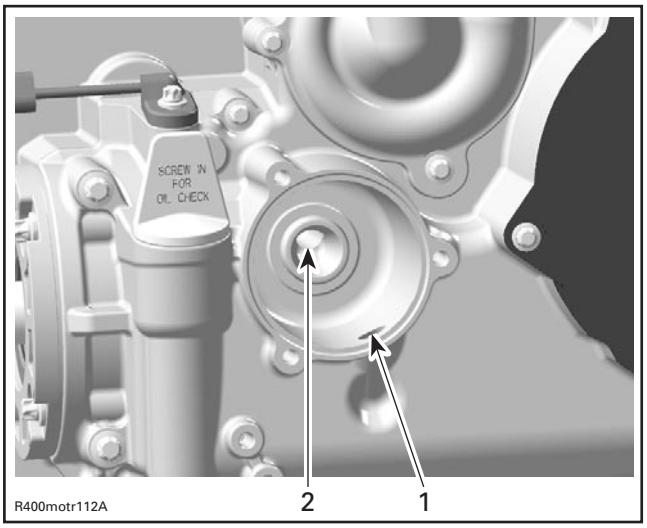

1. *Inlet bore from the oil pump to the oil filter*
2. *Outlet bore to the engine oil providing system*

Installation

The installation is the opposite of the removal procedure. Pay attention to the following details.

Apply oil on rubber seal of oil filter to ensure proper installation.

Install O-ring on oil filter cover.

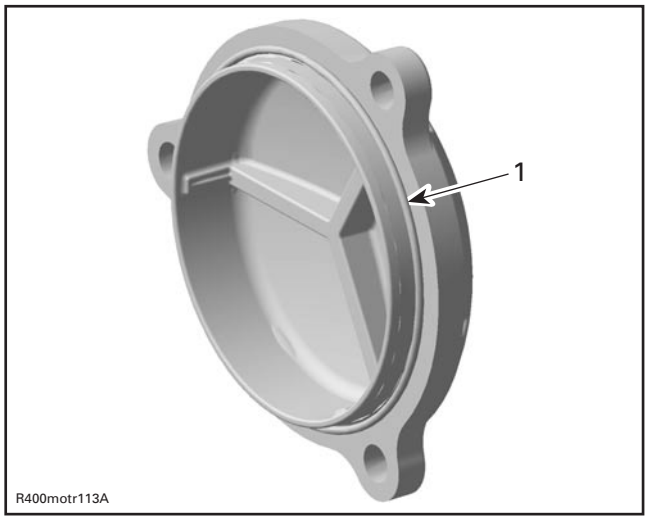

1. *O-ring in place*

OIL STRAINER

Removal

Remove:

- engine oil (refer to OIL CHANGE)
- air box (refer to AIR INTAKE SILENCER)
- disconnect unit bolts from engine
- exhaust support bolts
- upper engine support bolts.

Install the lifting engine tool (P/N 529 035 898).

Remove:

- front and rear engine mounting bolts
- front engine mounting bracket
- CVT outlet and inlet hoses
- exhaust nuts
- carburetor from grommet.

Lift engine and disconnect the rear propeller shaft.

Remove:

- screws **no. 11** retaining oil strainer cover **no. 10**

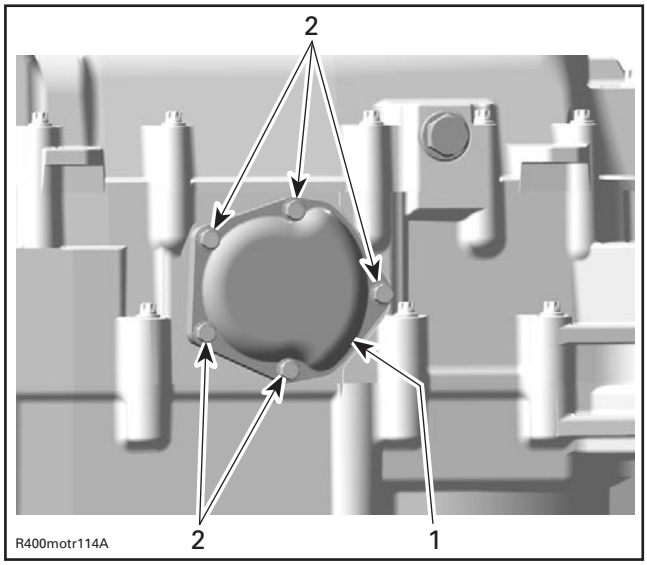

1. *Oil strainer cover*
2. *5 screws*

https://truckmanualshub.com/

– oil collector **no. 8** and O-ring **no. 7**
– oil strainer **no. 6**.

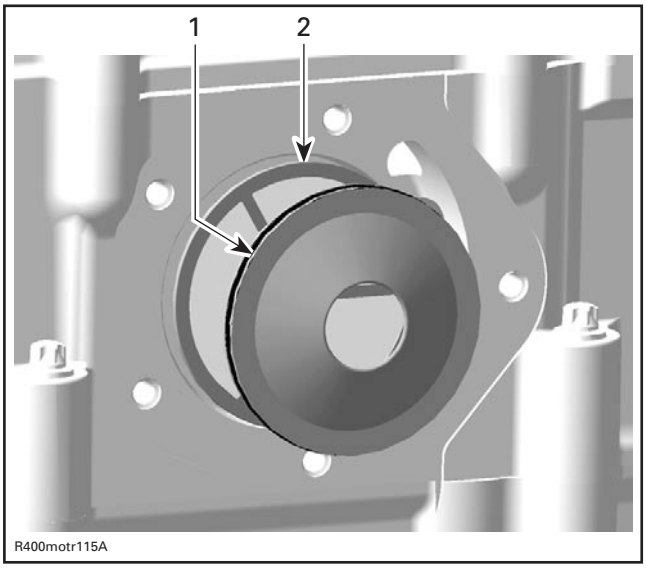

1. *Oil collector with O-ring*
2. *Oil strainer*

Cleaning and Inspection

Clean oil strainer with a part cleaner then use an air gun to dry it.

⚠ WARNING

Always wear eye protector. Chemicals can cause a rash break out in and an injury to your eyes.

Inspect O-ring **no. 7** and rubber ring **no. 9**.

If O-ring and/or rubber ring is (are) brittle, cracked or hard, replace the defective part(s).

Clean both contact surfaces of oil strainer cover.

Check and clean the oil inlet and outlet area for dirt and other contaminations.

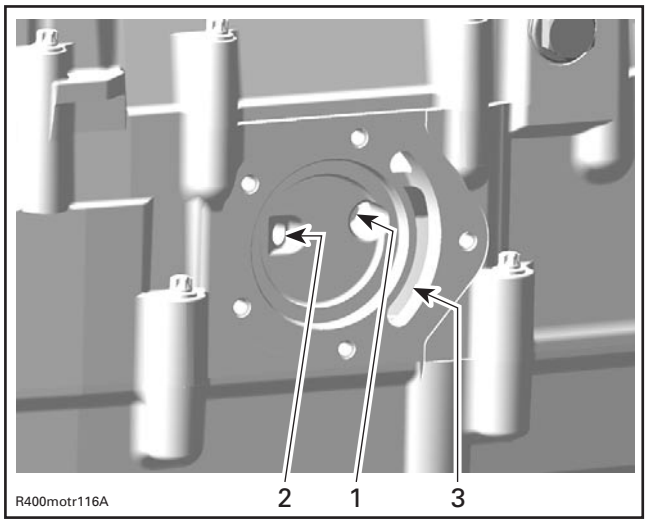

1. *Oil inlet to the oil pump*
2. *Oil return from the oil pressure regulator system*
3. *Oil return from the engine oil circulation*

Installation

For installation, reverse the removal procedure.

Torque oil strainer cover screws as per following sequence.

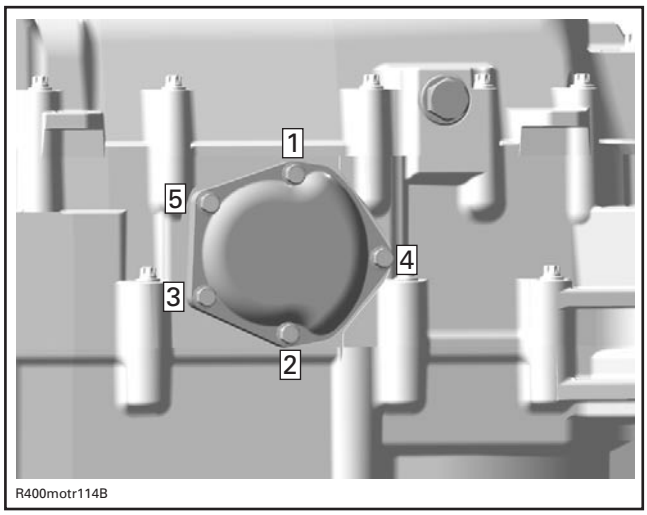

Refill engine at the proper level with the recommended oil. Refer to TECHNICAL DATA for capacity.

Start engine and let idle for a few minutes. Ensure oil filter and magnetic drain plug areas are not leaking.

Stop engine. Wait a while to allow oil to flow down to crankcase then check oil level. Refill as necessary.

https://truckmanualshub.com/

ENGINE OIL PRESSURE REGULATOR

The oil pressure regulator is located on the engine MAG side (behind magneto housing cover).

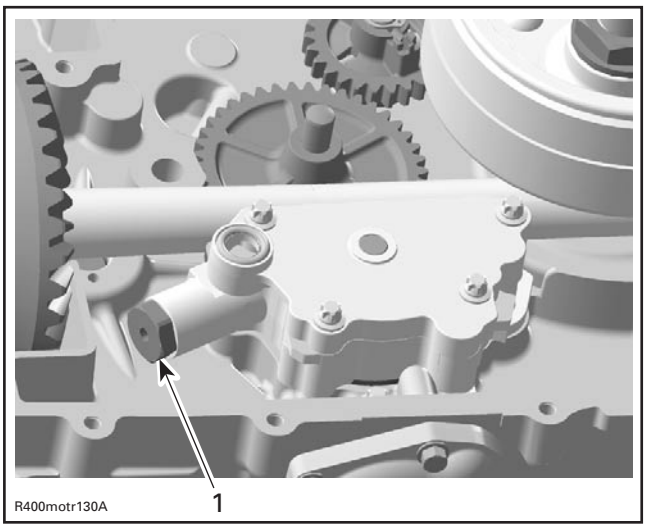

1. Oil pressure regulator plug

NOTE: The oil pressure regulator system works when the oil pressure exceeds 500 kPa (73 PSI).

Removal

Remove:

- vehicle from vehicle (refer to REMOVAL and INSTALLATION)
- water pump housing (refer to COOLING SYSTEM)
- magneto housing cover (refer to MAGNETO SYSTEM)
- oil pressure regulator plug **no. 20**, compression spring **no. 19** and valve piston **no. 18**.

⚠ WARNING

Oil pressure regulator plug on oil pump housing is spring loaded.

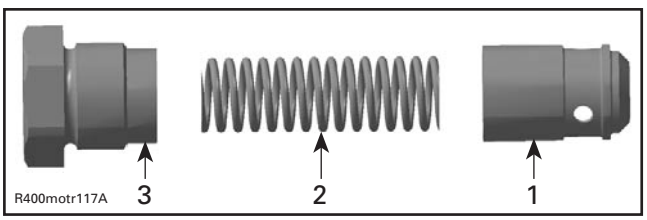

1. Valve piston
2. Compression spring
3. Oil pressure regulator plug

Inspection

Inspect valve piston for scoring or other damages.

Check compression spring for free length.

COMPRESSION SPRING FREE LENGTH	
NEW NOMINAL	64 mm (2.519 in)
SERVICE LIMIT	62 mm (2.441 in)

Replace both parts if important wear or damage are present.

Clean bore and threads in the oil pump housing from metal shavings and other contaminations.

Installation

For installation, reverse the removal procedure.

OIL PUMP

The oil pump is located on the engine MAG side (refer to ENGINE OIL PRESSURE REGULATOR).

Removal

Remove:

- engine from vehicle (refer to REMOVAL AND INSTALLATION)
- water pump housing (refer to COOLING SYSTEM)
- magneto housing cover (refer to MAGNETO SYSTEM)

NOTE: The following steps to remove the gears **no. 13** and **no. 16** are not necessary to replace only the oil pump.

- retaining ring **no. 14** then drive gear **no. 13**

CAUTION: Never use the retaining ring a second time. Always replace by a new one.

NOTE: Drive gear is snapped on a needle pin. This needle pin passes through the balancing shaft.

- needle pin **no. 12**
- pin **no. 15**
- intermediate gear **no. 16**

https://truckmanualshub.com/

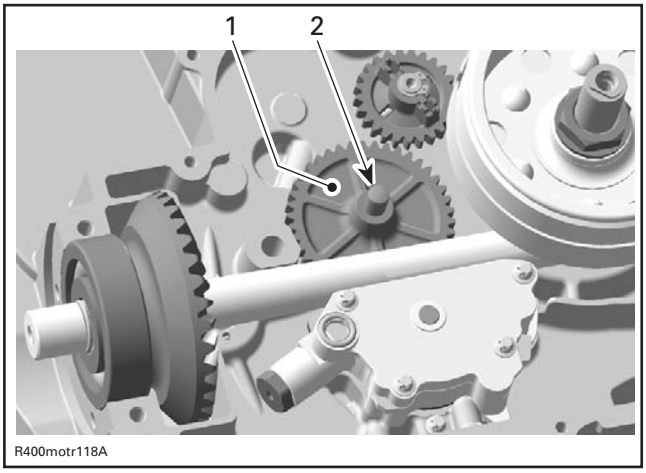

1. *Intermediate gear*
2. *Pin*

– screws **no. 26**

– oil pump cover **no. 23**

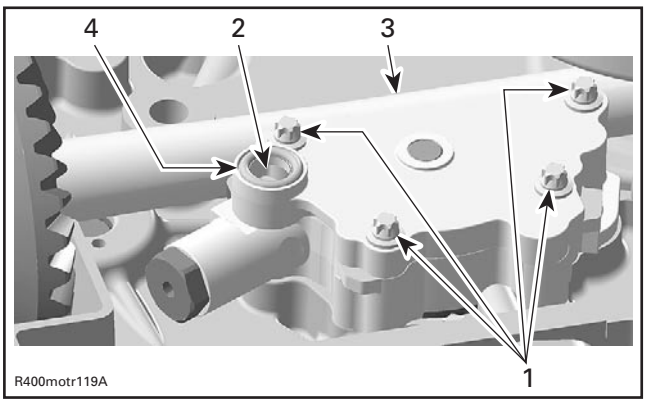

1. *4 screws*
2. *Oil from the pump to the oil filter in the magneto housing cover*
3. *Oil pump cover*
4. *Oil seal to crankcase MAG side*

NOTE: To remove oil pump system, lift the dowel pins **no. 22** a bit. The oil pump housing with oil pump shaft assembly will be easier to remove.

CAUTION: Pay attention not to drop the dowel pins inside the engine.

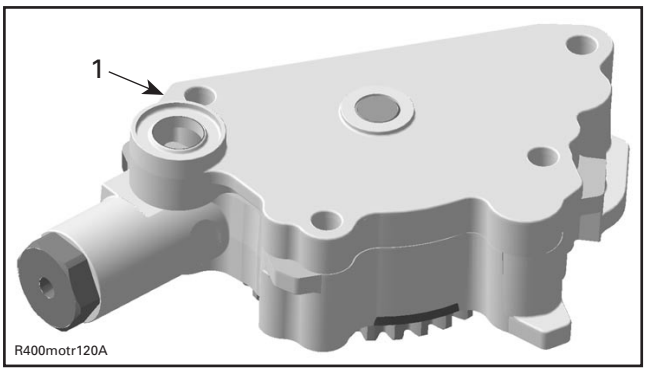

1. *Oil pump system*

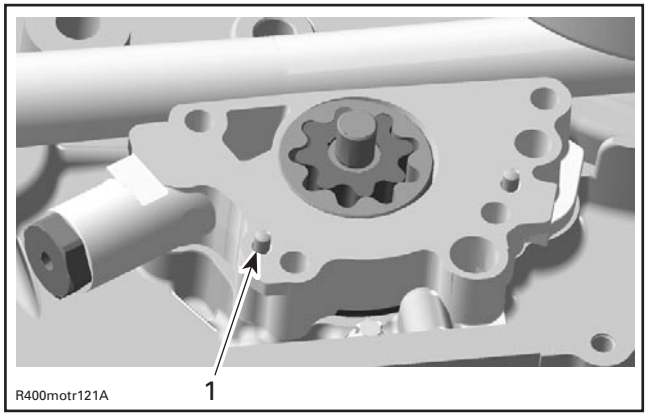

1. *Dowel pins*

– oil pump gear **no. 25**

NOTE: Oil pump gear is snapped on needle pin. This needle pin passes through the oil pump shaft. Use screwdrivers to remove this gear.

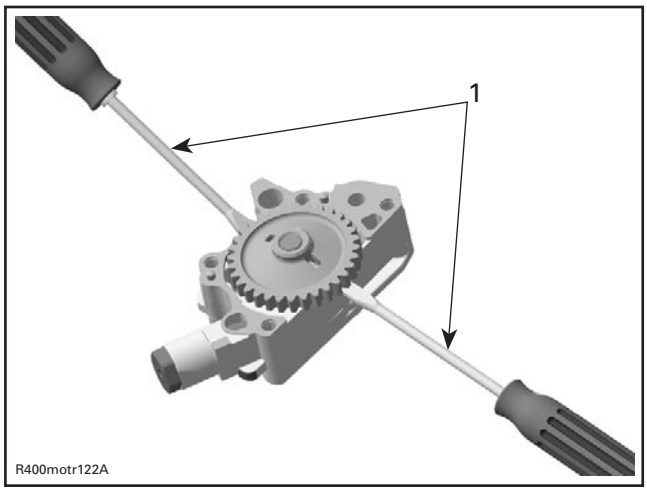

1. *Flat screwdrivers*

https://truckmanualshub.com/

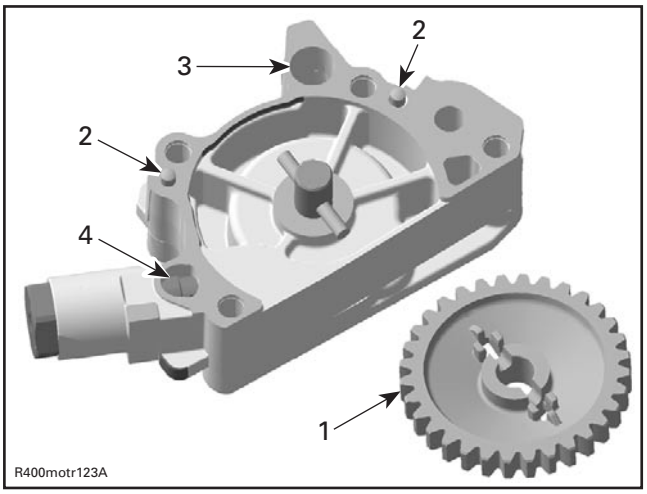

1. *Oil pump gear*
2. *Dowel pins*
3. *Suction side of the oil pump*
4. *Outlet from the engine oil pressure regulator valve*

– needle pin **no. 24**

– oil pump shaft assembly **no. 21**

– oil pump housing **no. 17**.

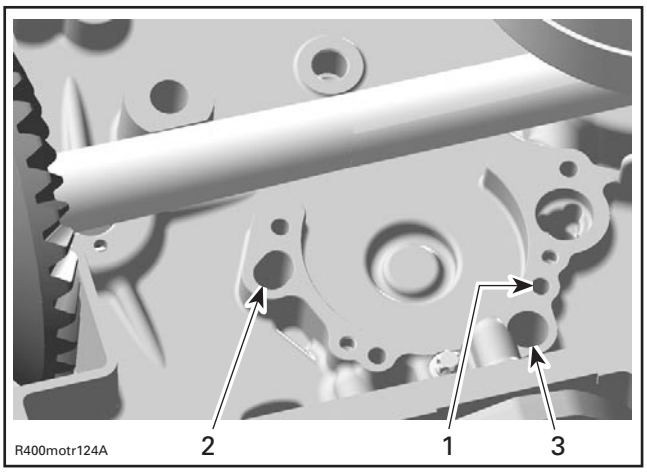

1. *Oil inlet to the oil pump (leads to strainer on engine bottom)*
2. *Oil return from the oil pressure regulator system*
3. *Bore for dowel pin support*

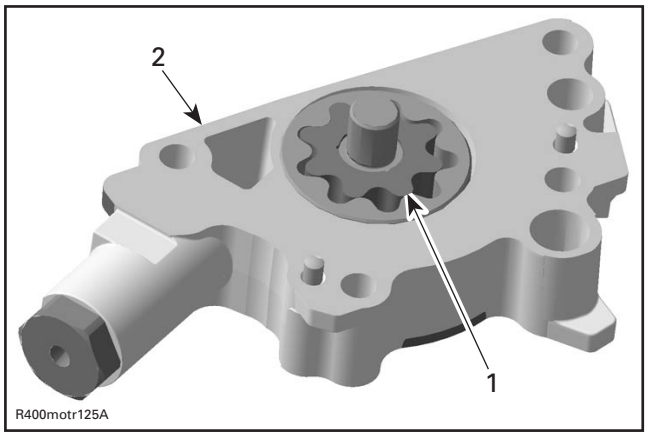

1. *Oil pump shaft assembly*
2. *Oil pump housing*

Inspection

Inspect oil pump shaft assembly, housing and cover for marks or other damages.

Replace O-ring **no. 27** if brittle or hard. This O-ring is located on the oil pump housing.

Check inner rotor for corrosion pin-holes or other damages. If so, replace oil pump shaft assembly. Ensure to also check oil pump housing and cover. If damaged, replace the complete oil pump assembly.

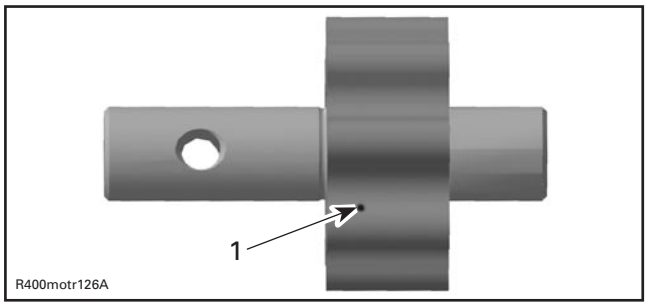

1. *Pittings on the teeth*

Using a feeler gauge, measure the clearance between inner and outer rotor.

https://truckmanualshub.com/

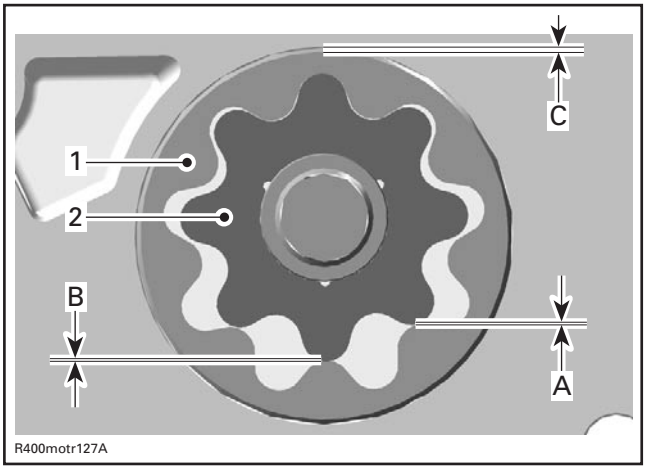

1. Outer rotor
2. Inner rotor

OUTER AND INNER ROTOR CLEARANCE mm (in)	
SERVICE LIMIT	
A	0.25 mm (.009 in)
B	
C	

If clearance between inner and outer rotor exceeds the tolerance, replace oil pump shaft assembly. Ensure to also check oil pump housing and cover. If damaged, replace the complete oil pump assembly.

If clearance between outer rotor and its bore in oil pump exceeds the tolerance, replace the complete oil pump assembly.

Using a dial indicator, measure side wear as shown.

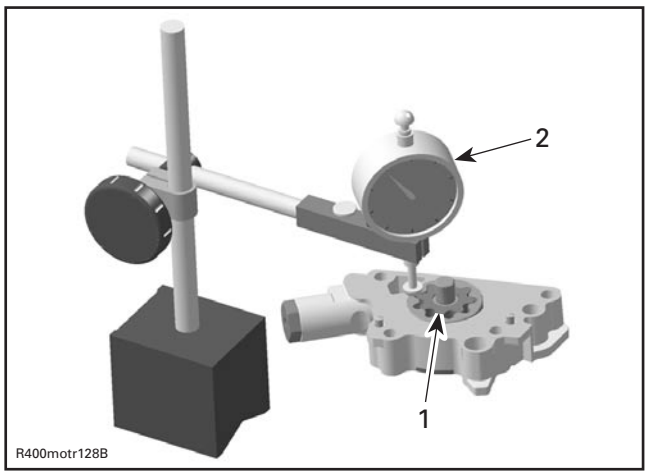

1. Oil pump housing surface
2. Dial indicator

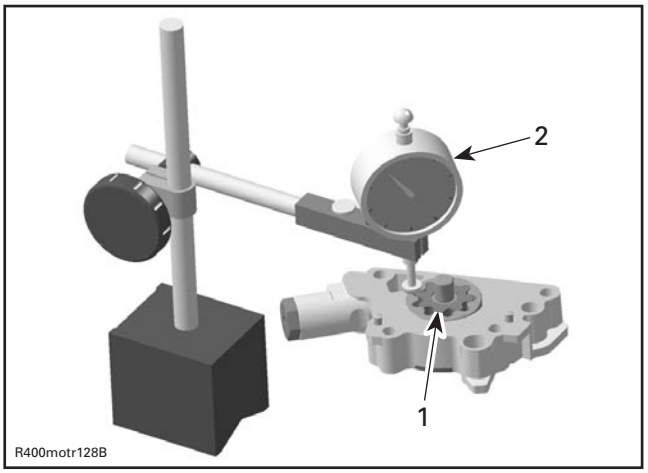

1. Oil pump outer rotor surface
2. Dial indicator

Difference between pump housing and outer rotor should not exceed 0.1 mm (.004 in). If so, replace replace the complete oil pump assembly.

NOTE: When the axial clearance of the oil pump shaft assembly increases, the oil pressure decreases.

Check the inside of oil pump housing and its cover for scoring or other damages. If so, change the complete oil pump assembly.

Installation

For installation, reverse the removal procedure.

Tightening oil pump housing screws as per following sequence.

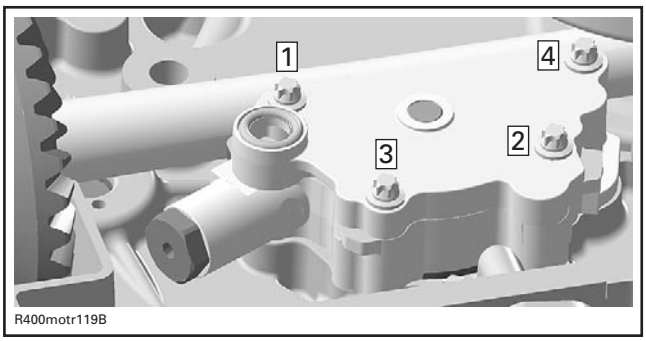

Install the O-ring **no. 27** on oil pump cover.

CAUTION: Never apply any sealing compound on split surfaces of oil pump.

Final Test

After engine is completely reassembled, start engine and make sure oil pressure is within specifications.

https://truckmanualshub.com/

https://truckmanualshub.com/

CYLINDER AND HEAD

NOTE: For cylinder head, cylinder and piston removal, it is not necessary to remove engine from vehicle.

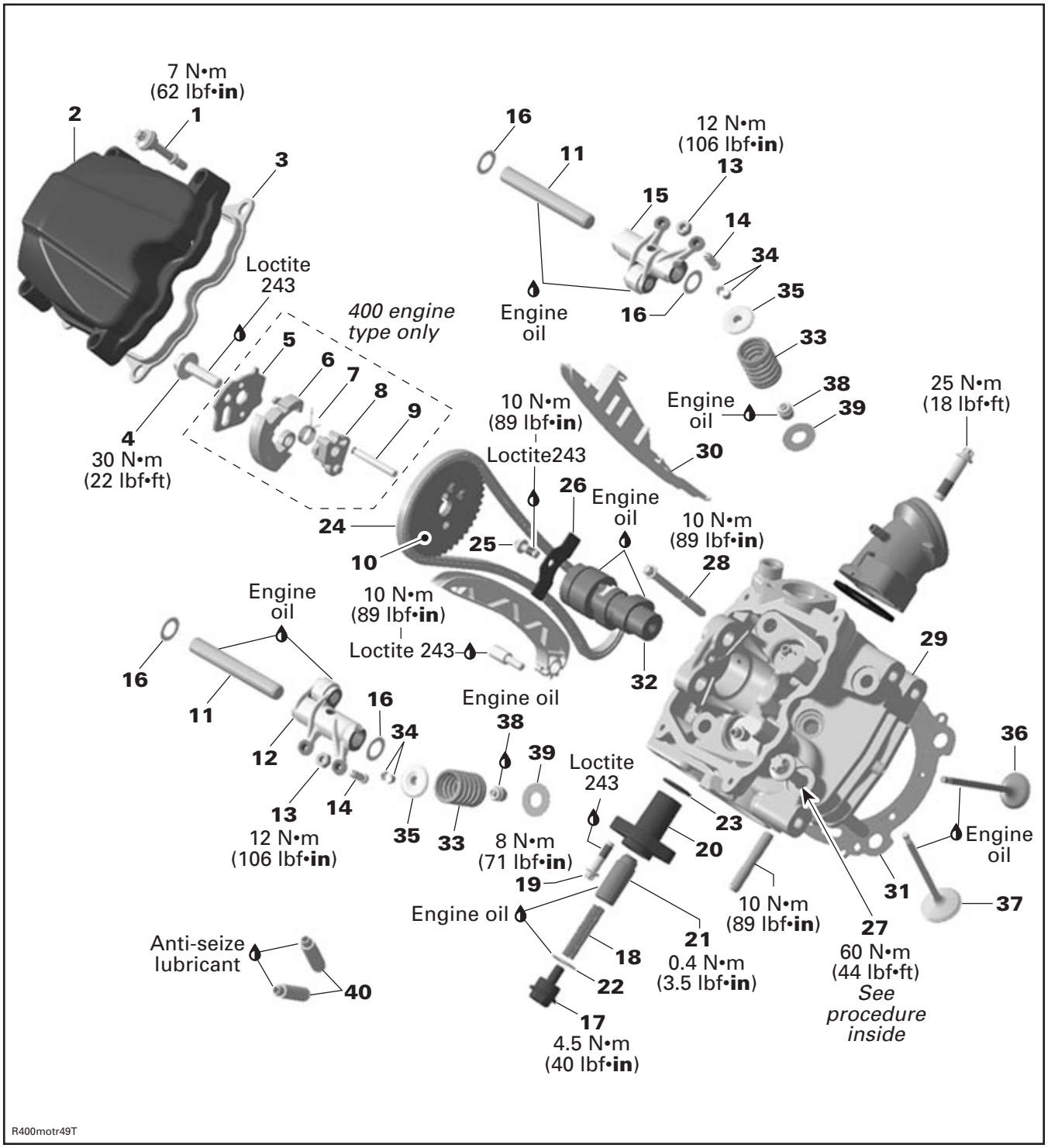

https://truckmanualshub.com/

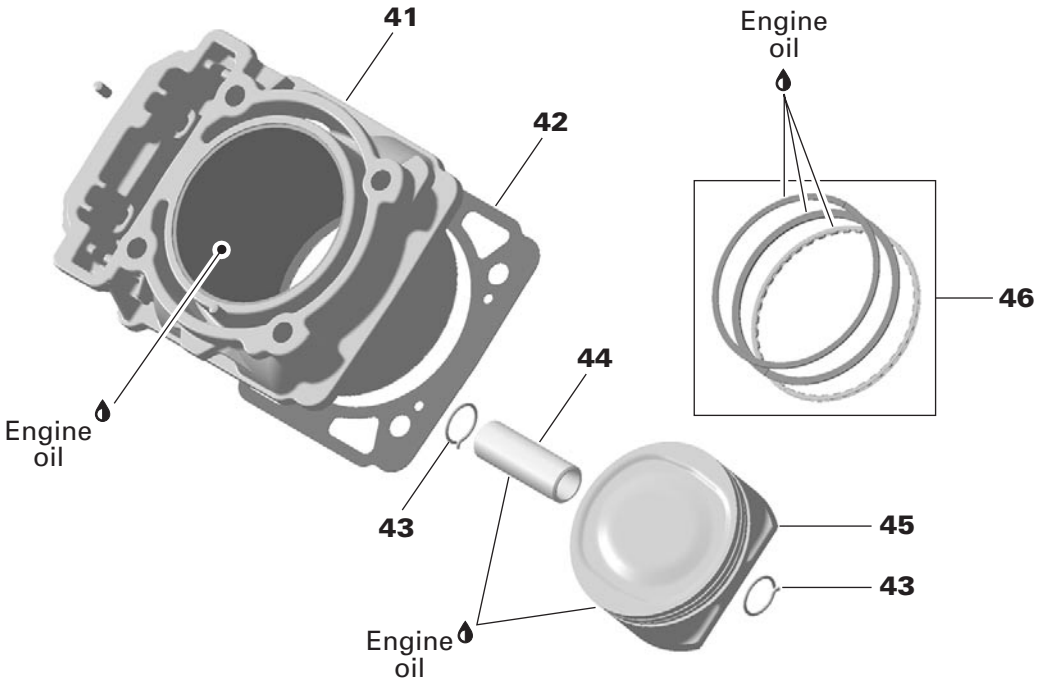

R400motr50S

https://truckmanualshub.com/

GENERAL

NOTE: When diagnosing an engine problem, always perform a cylinder leak test. This will help pin-point a problem. Refer to the instructions included with your leak tester and LEAK TEST section for procedures.

Always place the vehicle on level surface.

NOTE: For a better understanding, the many illustrations are taken with engine out of vehicle. To perform the following instructions, it is not necessary to remove engine from vehicle.

Always disconnect BLACK (-) cable from the battery, then RED (+) cable before working on the engine.

⚠ WARNING

Always disconnect battery or starter cables exactly in the specified order, BLACK (-) cable first.

Even if the removal of many parts is not necessary to reach another part, it is recommended to remove these parts in order to check them.

During assembly/installation, use the torque values and service products as in the exploded views.

Clean threads before applying a threadlocker. Refer to SELF-LOCKING FASTENERS and LOCTITE APPLICATION at the beginning of this manual for complete procedure.

⚠ WARNING

Torque wrench tightening specifications must strictly be adhered to.

Locking devices (ex.: locking tabs, elastic stop nuts, self-locking fasteners, cotter pin, etc.) must be installed or replaced with new ones where specified. If the efficiency of a locking device is impaired, it must be renewed.

When disassembling parts that are duplicated in the engine, (e.g.: valves), it is a strongly recommended to note their position (PTO, MAG side) and to keep them as a "group". If you find a defective component, it would be much easier to find the cause of the failure among its group of parts (e.g.: you found a worn valve guide. A bent spring could be the cause and it will be easy to know which one among the springs is the cause to replace it if you grouped them at disassembly). Besides, since used parts have matched together during the engine operation, they will keep their matched fit when you reassemble them together within their "group".

Intake port/air filter contaminated (clogged) with dirt, sand, etc. (leads to worn valves, piston rings and finally to leak of power).

CAUTION: In case of piston rings and/or valve replacement, always clean the whole engine and change oil and oil filter.

SPARK PLUG

Removal

Unplug the spark plug wire.

Clean spark plug area before disassembly.

Unscrew spark plug.

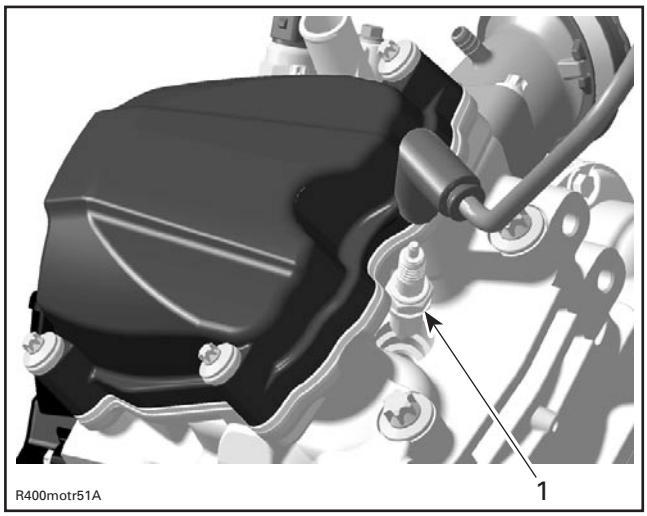

1. Spark plug on engine PTO side

Inspection

Check spark plug condition (refer to IGNITION SYSTEM).

NOTE: To check spark, place connected spark plug with threads against crankcase to simulate electrical ground and crank the engine.

Installation

For installation, reverse the removal procedure. Pay attention to the following details.

Check spark plug gap (refer to TECHNICAL DATA).

Screw spark plug. Torque spark plug to 20 N•m (15 lbf•ft). Reinstall the spark plug wire.

THERMOSTAT

Refer to COOLING SYSTEM.

https://truckmanualshub.com/

VALVE COVER

Removal

Remove:

– valve cover screws **no. 1**

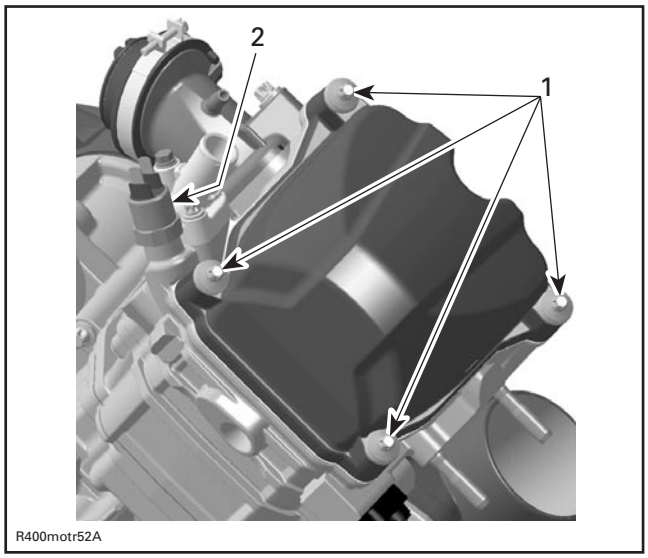

1. *Valve cover screws*
2. *Water temperature switch*

– valve cover **no. 2** and profile sealing ring **no. 3**.

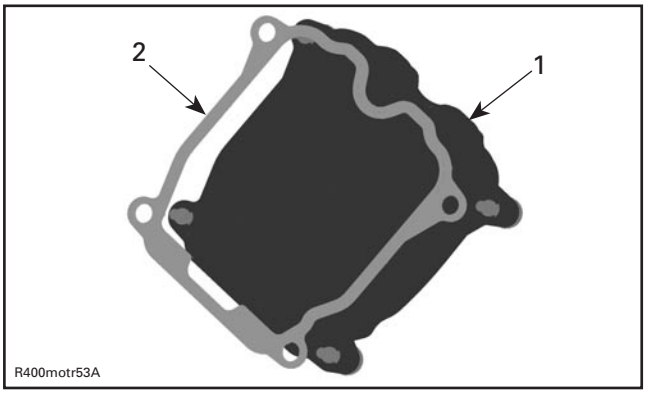

1. *Valve cover*
2. *Profile sealing ring*

Inspection

Check the profile sealing ring on the valve cover if it is brittle, cracked or hard. If so, replace the profile sealing ring.

Installation

For installation, reverse the removal procedure.

Install the valve cover screws in a criss-cross sequence.

VALVE ADJUSTMENT

Lock crankshaft at the TDC compression position (refer to CRANKSHAFT/BALANCER SHAFT, see CRANKSHAFT LOCKING PROCEDURE).

Remove valve cover (refer to VALVE COVER above).

Hold adjusting screw **no. 14** and loosen locking nut **no. 13**.

Using feeler gauge, check the valve clearance.

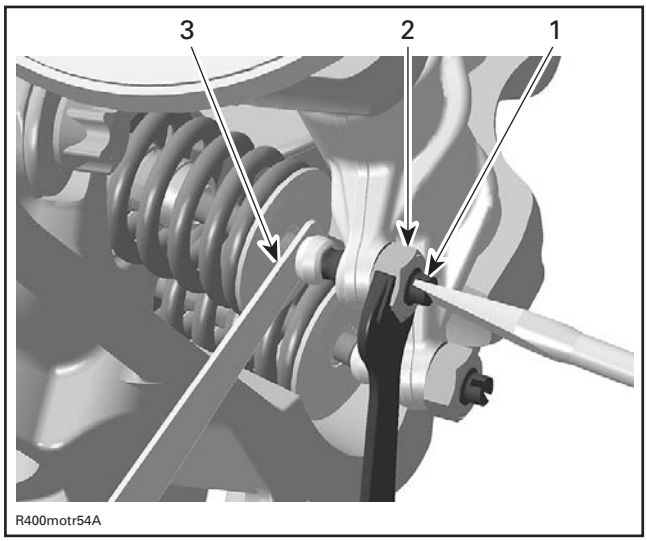

1. *Adjustment screws*
2. *Locking nuts*
3. *Feeler gauge*

VALVE CLEARANCE	
EXHAUST	0.11 to 0.19 mm (.0043 to .0075 in)
INTAKE	0.06 to 0.14 mm (.0024 to .0055 in)

NOTE: Use mean value of exhaust/intake to ensure a proper valve adjustment.

Hold the adjusting screw at the proper position and torque the locking nut.

Repeat the procedure for each valve.

Before installing valve cover, recheck all valve adjustments.

https://truckmanualshub.com/

CHAIN TENSIONER

Removal

⚠ WARNING

Chain tensioner is spring loaded.

⚠ WARNING

Never perform this operation immediately after the engine has been run because the exhaust system can be very hot. Wait until exhaust system is warm or cold.

Remove:

- chain tensioner plug **no. 17**
- O-ring **no. 22**
- spring **no. 18**
- chain tensioner plunger **no. 21**.

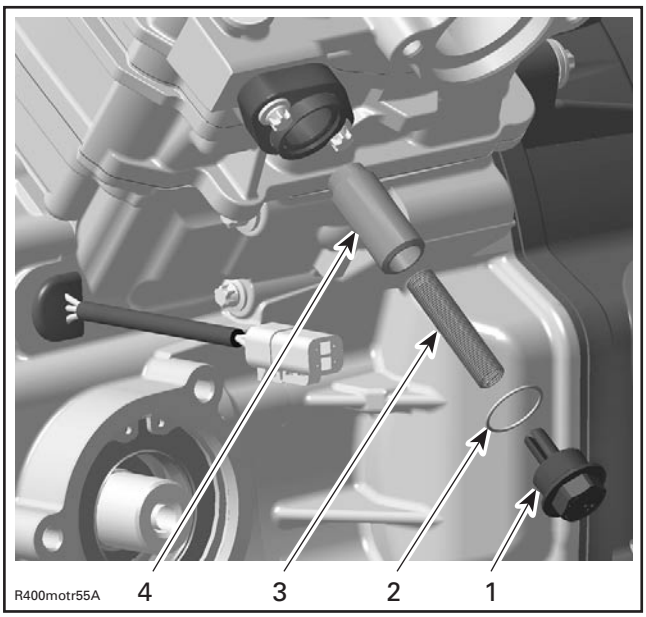

1. *Chain tensioner plug*
2. *O-ring*
3. *Spring*
4. *Chain tensioner plunger*

Inspection

Check chain tensioner plunger for free movement and/or scoring.

Check if possible chain guides for wear. Replace as necessary.

Check if O-ring **no. 22** is brittle, cracked or hard. Replace as necessary.

Check spring condition. Replace if broken or worn.

Installation

For installation, reverse the removal procedure. However, pay attention to the following.

Screw the plunger until it touches the chain guide.

Install a spring end in plunger groove and the other in the plug groove. Screw plug.

CAUTION: Do not forget to place the O-ring no. 22 on chain tensioner plug.

CHAIN TENSIONER HOUSING

Removal

Remove:

- chain tensioner
- screw **no. 19**
- chain tensioner housing **no. 20** with O-ring **no. 23**.

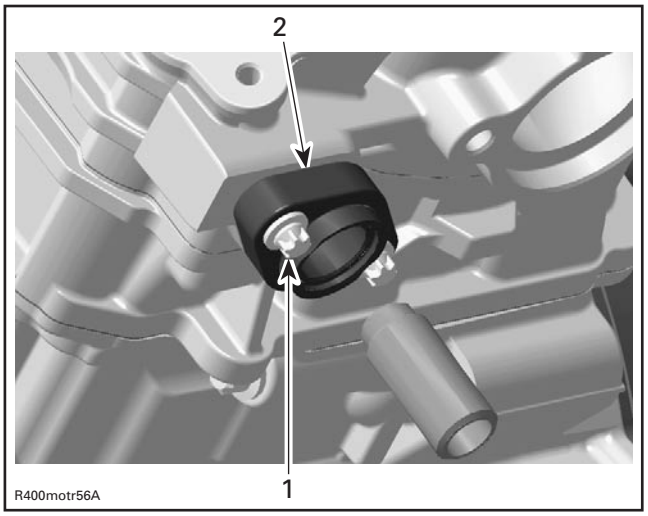

1. *Chain tensioner screw*
2. *Chain tensioner housing*

Inspection

Check the housing for cracks or other damages. Replace it if necessary.

Check if O-ring **no. 23** is brittle, cracked or hard. Replace as necessary.

Installation

Reverse the removal procedure.

https://truckmanualshub.com/

DECOMPRESSOR

330 Engines

This engine is not equipped with a decompressor system. Therefore parts **no. 5** to **no. 8** are not present and camshaft screw **no. 4** is shorter.

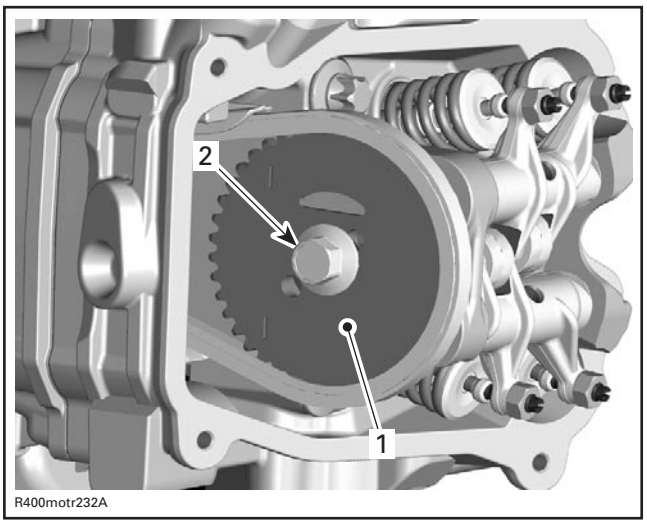

1. *Camshaft timing gear*
2. *Camshaft screw*

400 Engines

Removal

Remove:

- valve cover
- camshaft screw **no. 4**
- decompressor washer **no. 5**
- centrifugal weight **no. 6** together with torsion spring **no. 7** and spacer **no. 8**
- decompressor shaft **no. 9**.

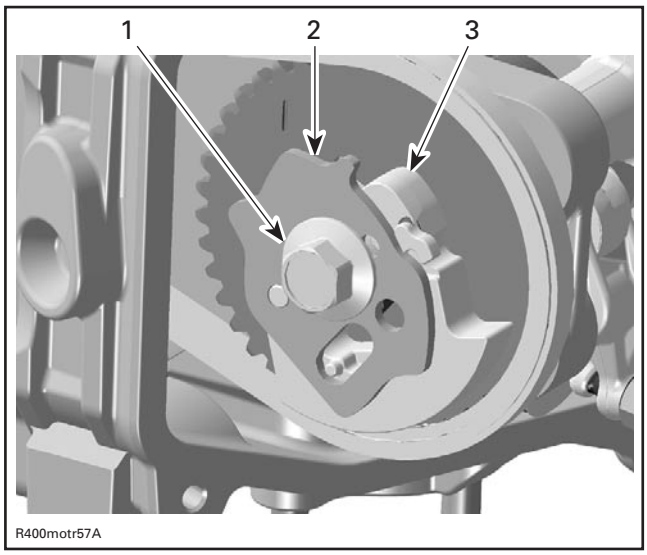

1. *Camshaft screw*
2. *Decompressor washer*
3. *Centrifugal weight*

Inspection

Check decompressor shaft for service limit, replace if out of specifications.

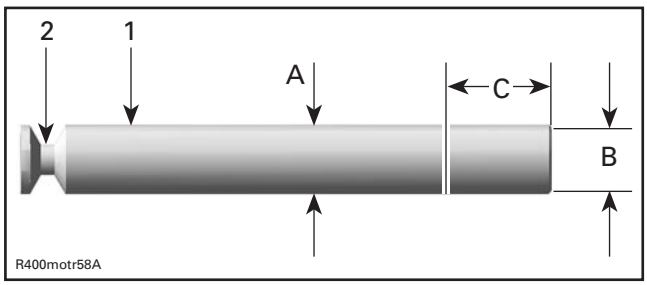

1. *Decompressor shaft*
2. *Groove for centrifugal weight*

A. *Measure here the bearing seat to cylinder head*
B. *Measure top end (contact to camshaft lobe exhaust)*
C. *7 mm (.276 in)*

https://truckmanualshub.com/

DECOMPRESSOR SHAFT MEASUREMENT A	
NEW MINIMUM	5.578 mm (.219 in)
NEW MAXIMUM	5.590 mm (.220 in)
SERVICE LIMIT	5.450 mm (.215 in)

DECOMPRESSOR SHAFT MEASUREMENT B	
NEW MINIMUM	5.300 mm (.210 in)
NEW MAXIMUM	5.350 mm (.211 in)
SERVICE LIMIT	5.050 mm (.199 in)

Check torsion spring, edge and bearing bore of centrifugal weight for visible wear. If so, replace them together.

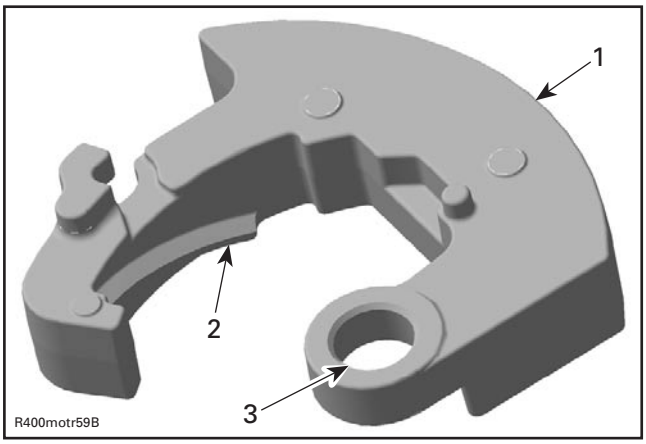

1. *Centrifugal weight*
2. *Edge of centrifugal weight*
3. *Bearing bore*

Installation

The installation is the reverse of the removal procedure, but pay attention to the following details.

Position the end of torsion spring properly in the centrifugal weight location.

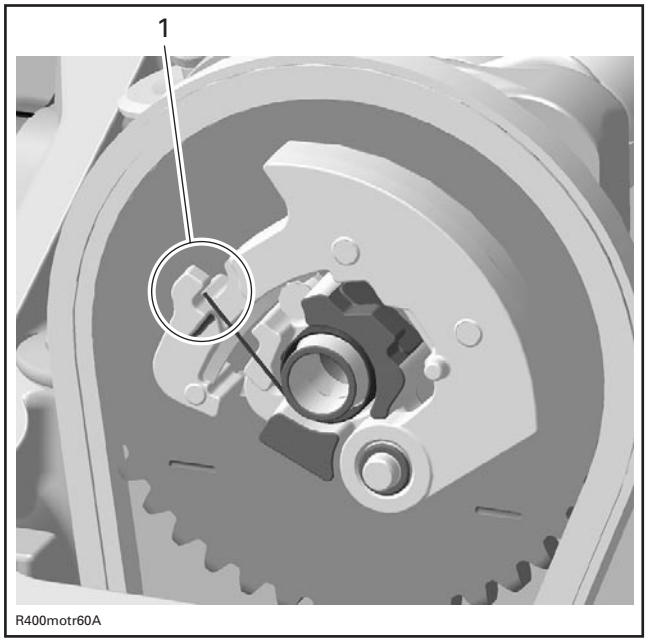

1. *Position of torsion spring end*

Engage the edge of centrifugal weight into the decompressor shaft groove then put the parts in place.

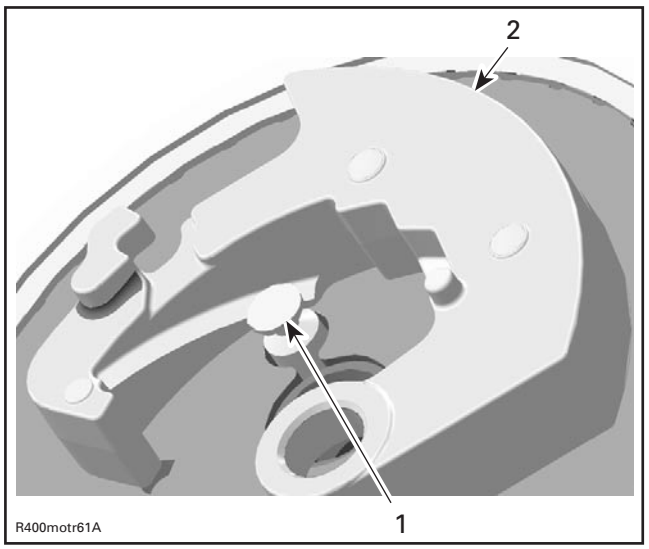

1. *Decompressor shaft groove*
2. *Centrifugal weight*

CAUTION: Take care before and after cover installation that the centrifugal system moves (slides) easily.

https://truckmanualshub.com/

CAMSHAFT TIMING GEAR

Removal

Remove:

– valve cover

– chain tensioner

Using the camshaft locking tool (P/N 529 035 926), lock the camshaft at TDC compression position to prevent timing chain stretching.

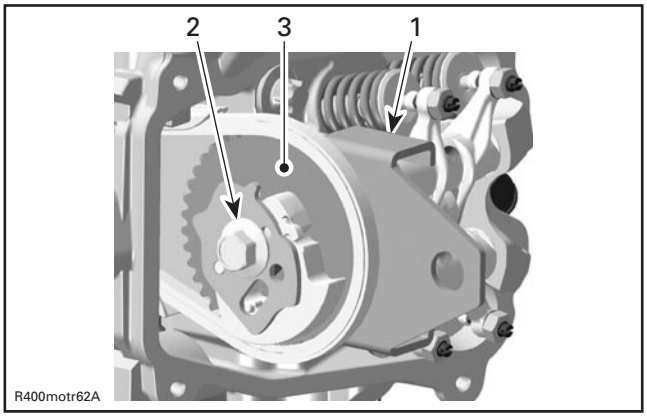

1. Camshaft locking tool
2. Camshaft screw
3. Camshaft timing gear

Lock crankshaft at the TDC compression position to have the crankshaft position defined for reassembly (refer to CRANKSHAFT/BALANCER SHAFT, see CRANKSHAFT LOCKING PROCEDURE).

– decompressor (**400 engine type only**)

– camshaft timing gear **no. 10**.

NOTE: Secure timing chain **no. 24** with a retaining wire.

Inspection

Check camshaft timing gear for wear or deterioration.

If gear is worn or damaged, replace it as a set (camshaft timing gear and timing chain).

For crankshaft timing gear, refer to CRANKSHAFT/BALANCER SHAFT.

Installation

For installation, reverse the removal procedure. Pay attention to the following details.

Clean mating surface and threads of camshaft prior to assemble camshaft timing gear.

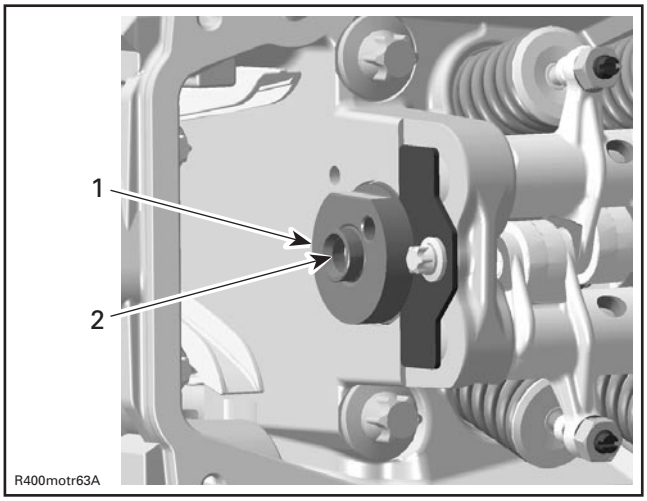

1. Mating surface on camshaft
2. Threads for camshaft screw

Camshaft timing gear must be at TDC position before installing the timing chain.

Install camshaft timing gear so that the timing gear tabs are located into the flat zone of the camshaft. The printed marks on the camshaft timing gear have to be parallel to the cylinder head base. See the following illustration for a proper positioning.

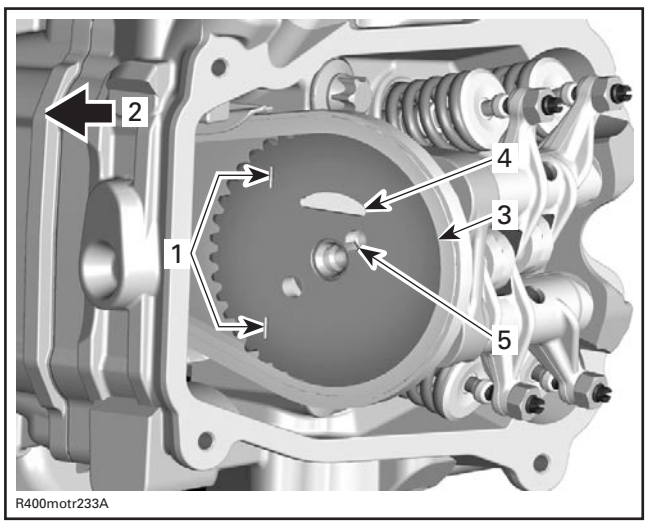

1. Printed marks on camshaft timing gear
2. Cylinder head base
3. Camshaft timing gear
4. Timing gear tab
5. Decompressor shaft bore

https://truckmanualshub.com/

CAUTION: Crankshaft and camshaft must be locked on TDC position to place camshaft timing gear and timing chain in the proper position. Double-check position of timing gear with camshaft locking tool (P/N 529 035 926)

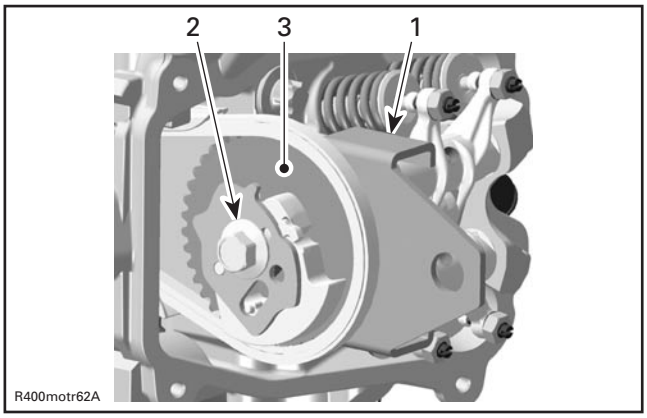

1. *Camshaft locking tool*
2. *Camshaft screw*
3. *Camshaft timing gear*

When the camshaft timing gear and the timing chain are installed, remove the crankshaft locking bolt as well as the camshaft locking tool.

Reinstall all other removed parts.

ROCKER ARM

Removal

Lock crankshaft at the TDC compression position, refer to CRANKSHAFT/BALANCER SHAFT, see CRANKSHAFT LOCKING PROCEDURE.

Remove:

– valve cover

– chain tensioner

– camshaft timing gear **no. 10**

– Allen screws **no. 25** and camshaft retaining plate **no. 26**

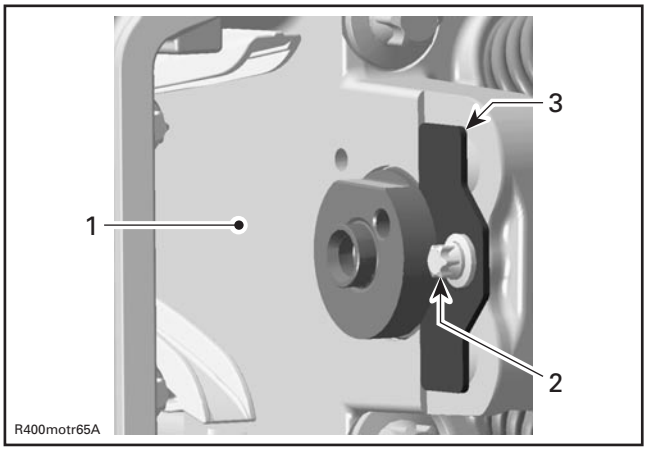

1. *Cylinder head*
2. *Allen screws*
3. *Camshaft retaining plate*

– rocker arm shafts **no. 11**

– rocker arm assembly (exhaust side **no. 12** and intake side **no. 15**) with adjustment screws **no. 14** and nuts **no. 13**

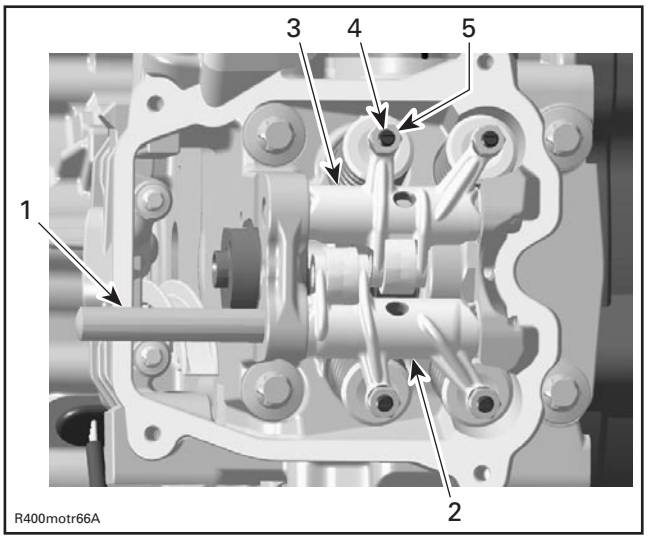

1. *Rocker arm shaft*
2. *Rocker arm (exhaust side)*
3. *Rocker arm (intake side)*
4. *Adjusting screw*
5. *Locking nut*

https://truckmanualshub.com/

– thrust washers **no. 16**.

CAUTION: Pay attention not to lose thrust washers or drop them into the timing chain compartment.

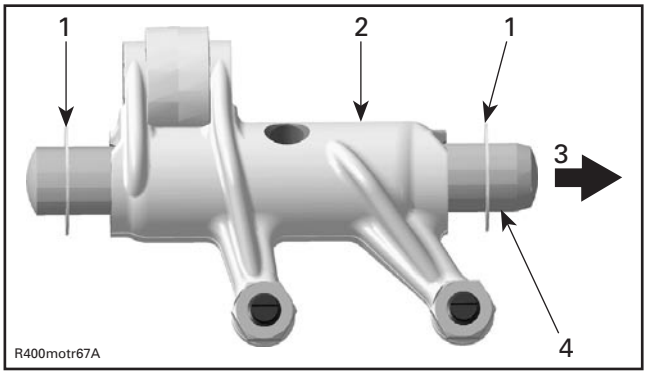

1. 2 thrust washers
2. Rocker arm (exhaust side)
3. Cylinder head — spark plug side
4. Big taper to PTO side

Inspection

Rocker Arm

Inspect each rocker arm for cracks and scored friction surfaces. If so, replace rocker arm assembly.

Check the rocker arm rollers for free movement, wear and excessive radial play. Replace rocker arm assembly if necessary.

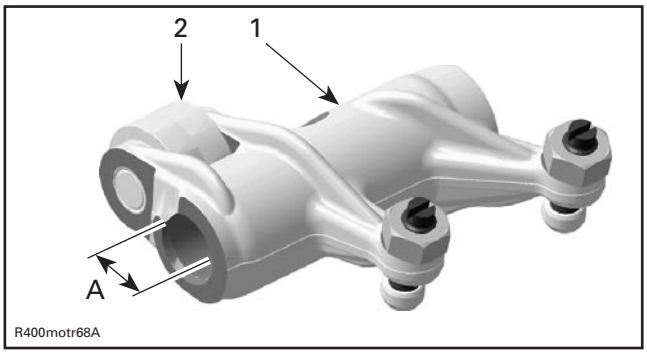

1. Rocker arm (exhaust side)
2. Roller
A. Bore for rocker arm shaft

Measure rocker arm bore diameter. If diameter is out of specification, change the rocker arm assembly.

ROCKER ARM BORE DIAMETER	
NEW MINIMUM	12.036 mm (.4739 in)
NEW MAXIMUM	12.050 mm (.4744 in)
SERVICE LIMIT	12.060 mm (.4748 in)

Check adjustment screws for free movement, cracks and/or excessive play.

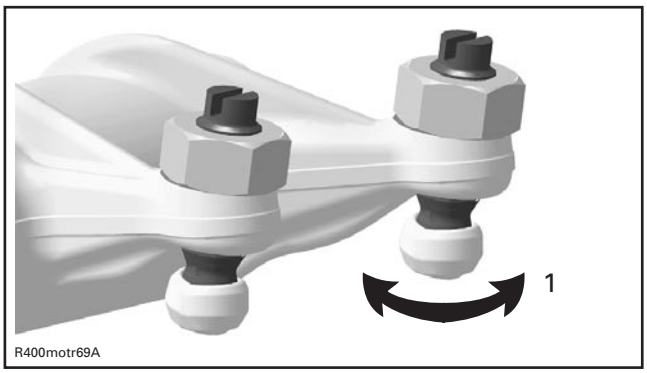

1. Free movement of adjustment screw top

Rocker Arm Shaft

Check for scored friction surfaces; if so, replace parts.

Measure rocker arm shaft diameter.

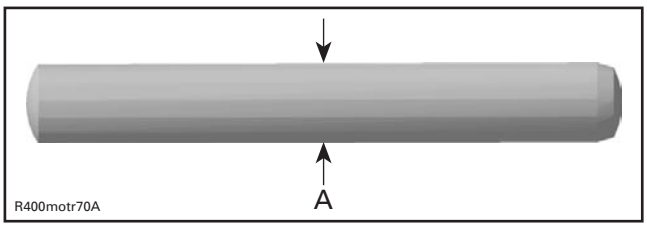

A. Measure rocker arm shaft diameter here

ROCKER ARM SHAFT DIAMETER	
NEW MINIMUM	12.007 mm (.4727 in)
NEW MAXIMUM	10.018 mm (.4731 in)
SERVICE LIMIT	11.990 mm (.4720 in)

Any area worn excessively will require parts replacement.

Installation

NOTE: Use the same procedure for exhaust or intake rocker arm.

Apply engine oil on rocker arm shaft.

Install the rocker arm shafts with the chamfered edge first and use following procedure:

– Insert a rocker arm pin through rocker arm pin bore.

– Install a thrust washer **no. 16** then the proper rocker arm **nos. 12** or **15** depending if you work on intake or exhaust side.

https://truckmanualshub.com/

– Push in rocker arm shaft **no. 11** until its chamfer reaches the end of rocker arm bore.

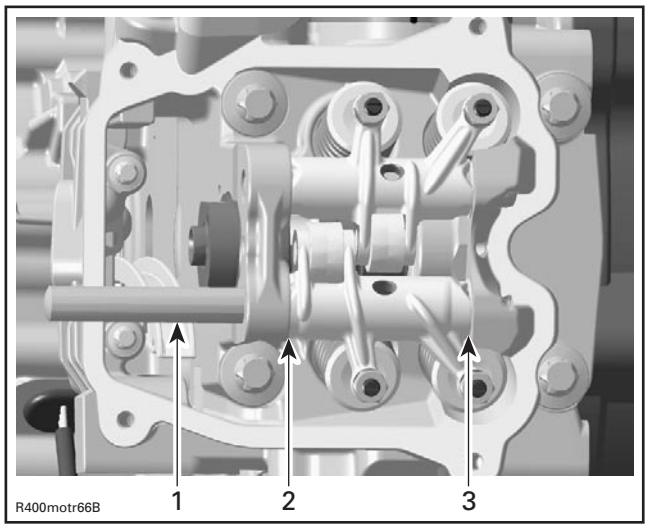

1. Rocker arm shaft
2. Thrust washer (MAG side)
3. Thrust washer (PTO side)

– Place the other thrust washer **no. 16** and push rocker arm shaft to end position.

Install the other rocker arm by using the previous procedure.

Install the camshaft retaining plate **no. 26**.

Install all other removed parts.

TIMING CHAIN

Refer to CRANKSHAFT/BALANCER SHAFT, see TIMING CHAIN.

CYLINDER HEAD

Removal

Lock crankshaft at TDC compression position, refer to CRANKSHAFT/BALANCER SHAFT, see CRANKSHAFT LOCKING PROCEDURE.

Drain coolant (refer to COOLING SYSTEM).

NOTE: Before removing cylinder head, blow out remaining coolant by air pressure. During cylinder head removal, the remaining coolant in cylinder head could overflow into the engine and a little quantity of coolant could drop into the engine. In this case, the engine oil will be contaminated.

Disconnect:

– spark plug wire
– temperature switch connectors.

Remove:

– both side panels and both inner fenders (refer to BODY)
– exhaust pipe spring
– exhaust pipe nuts
– radiator inlet hose
– carburetor clamp (cylinder head side only)
– chain tensioner (see CHAIN TENSIONER above)
– valve cover and profile sealing ring (see VALVE COVER above)
– camshaft timing gear
– cylinder head screws **no. 28**
– cylinder head screws **no. 27** retaining cylinder head and cylinder to cylinder base.

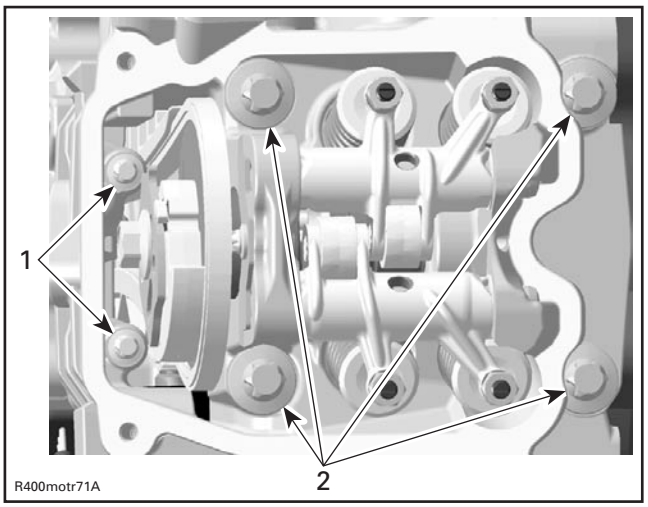

1. Cylinder head screws M6
2. Cylinder head screws M10

https://truckmanualshub.com/

Pull up cylinder head **no. 29**.

Remove:

– chain guide **no. 30**

– gasket **no. 31** (discard).

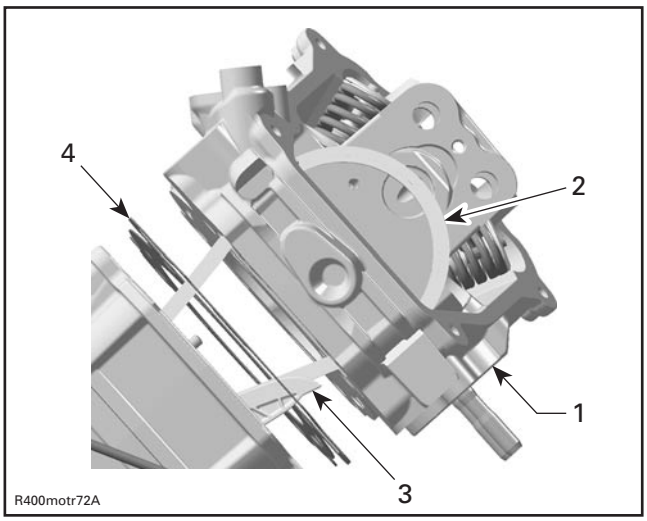

1. Cylinder head
2. Timing chain
3. Chain guide
4. Head gasket

Inspection

Check for cracks between valve seats, if so, replace cylinder head.

Check mating surface between cylinder and cylinder head for contamination. If so, clean both surfaces.

Clean oil support through the cylinder head from contamination.

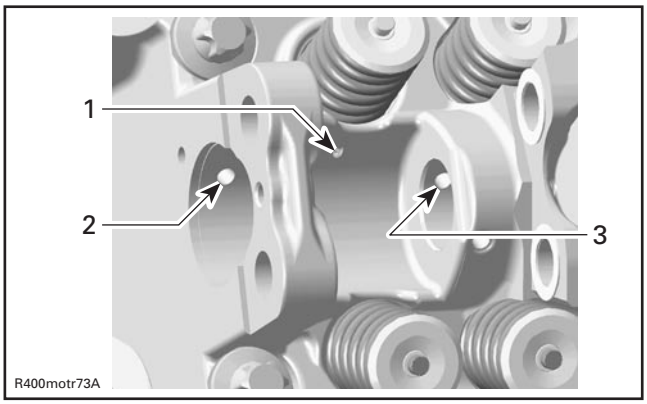

1. Oil port to lubricate camshaft lobes intake/exhaust
2. Oil supply to camshaft bearing journal MAG side
3. Oil supply to camshaft bearing journal PTO side

Installation

For installation, reverse the removal procedure. Pay attention to the following details.

Ensure dowel pins are in place.

Install a new gasket **no. 31**.

First, torque cylinder head screws **no. 27** in criss-cross sequence to 20 N•m (15 lbf•ft) then finish tightening by applying the recommended torque indicated in the exploded view.

Torque cylinder head screws **no. 28** with the recommended values in the exploded view.

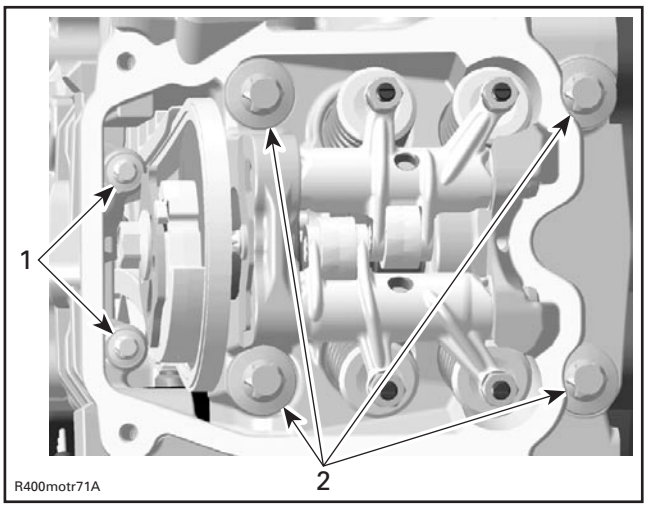

1. Cylinder head screws M6
2. Cylinder head screws M10

Check chain guide **no. 30** for movement.

CAUTION: Chain guide has to be fixed between cylinder and cylinder head.

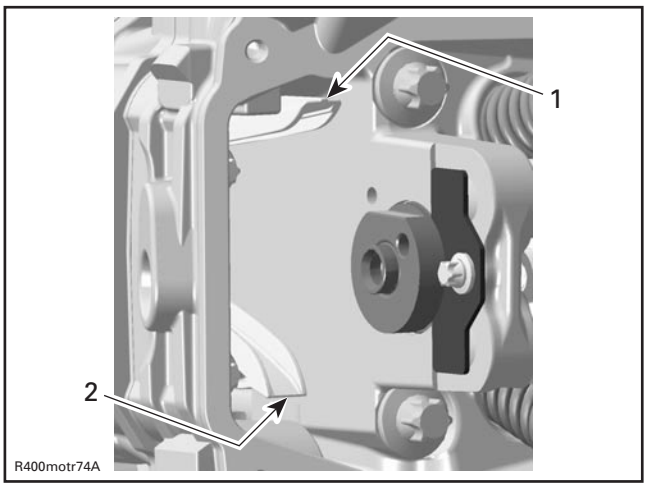

1. Chain guide (fixed between cylinder and cylinder head)
2. Chain tensioner guide (mounted in crankcase)

Remove crankshaft locking bolt then reinstall plug with sealing ring.

https://truckmanualshub.com/

CAMSHAFT

Removal

The camshaft can be removed with the cylinder head installed.

Remove:

– valve cover (see VALVE COVER above)

– chain tensioner (see CHAIN TENSIONER above)

– camshaft timing gear
(see CAMSHAFT TIMING GEAR above)

– camshaft retaining plate **no. 26**

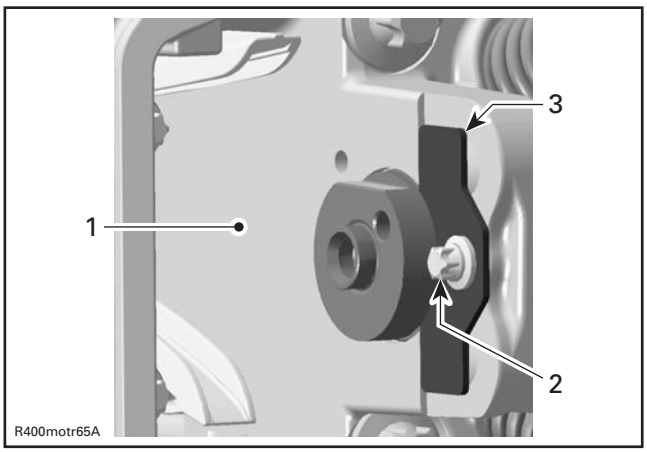

1. Cylinder head
2. Allen screws
3. Camshaft retaining plate

– rocker arms (see ROCKER ARM above)

– camshaft **no. 32**.

NOTE: Rotate camshaft so that intake/exhaust lobe shows to upper side of cylinder head to ease removal of the camshaft.

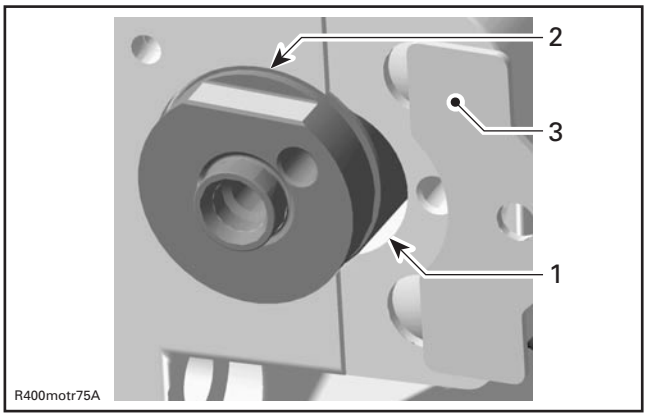

1. Area for camshaft lobes
2. Camshaft
3. Camshaft retaining plate

Inspection

Check each lobe and bearing journal of camshaft for scoring, scuffing, cracks or other signs of wear.

Measure camshaft bearing journal diameter and lobe height using a micrometer.

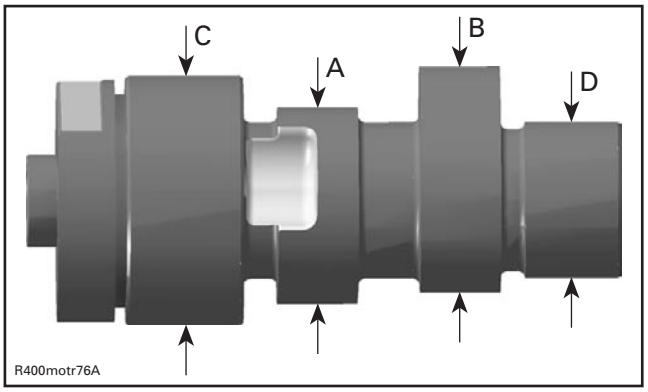

A. Camshaft lobe (exhaust valves)
B. Camshaft lobe (intake valves)
C. Camshaft bearing journal MAG side
D. Camshaft bearing journal PTO side

CAMSHAFT LOBE — EXHAUST VALVES	
NEW MINIMUM	32.027 mm (1.2609 in)
NEW MAXIMUM	32.047 mm (1.2617 in)
SERVICE LIMIT	32.000 mm (1.2598 in)
CAMSHAFT LOBE — INTAKE VALVES	
NEW MINIMUM	32.343 mm (1.2733 in)
NEW MAXIMUM	32.363 mm (1.2741 in)
SERVICE LIMIT	32.300 mm (1.2717 in)
CAMSHAFT BEARING JOURNAL — MAG SIDE	
NEW MINIMUM	34.959 mm (1.3763 in)
NEW MAXIMUM	34.975 mm (1.3770 in)
SERVICE LIMIT	34.950 mm (1.3760 in)
CAMSHAFT BEARING JOURNAL — PTO SIDE	
NEW MINIMUM	21.959 mm (.8645 in)
NEW MAXIMUM	21.980 mm (.8654 in)
SERVICE LIMIT	21.950 mm (.8642 in)

https://truckmanualshub.com/

Measure clearance between both ends of camshaft and cylinder head.

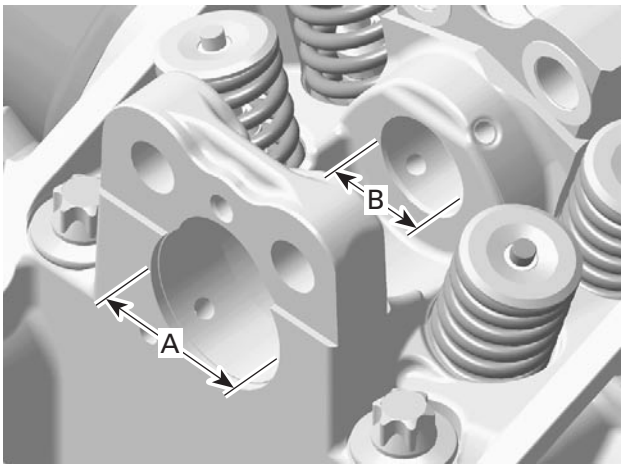

A. Cylinder head — camshaft bore MAG side
B. Cylinder head — camshaft bore PTO side

CAMSHAFT BORE — MAG SIDE MEASURED IN DIAMETER	
NEW MINIMUM	35.000 mm (1.3780 in)
NEW MAXIMUM	35.025 mm (1.3789 in)
SERVICE LIMIT	35.040 mm (1.3795 in)
CAMSHAFT BORE — PTO SIDE MEASURED IN DIAMETER	
NEW MINIMUM	22.000 mm (.8661 in)
NEW MAXIMUM	22.021 mm (.8670 in)
SERVICE LIMIT	22.040 mm (.8677in)

Replace parts that are not within specifications.

Installation

For installation, reverse the removal procedure. Pay attention to the following details.

Install camshaft in the opposite way of the removal then place the camshaft retaining plate in the slot.

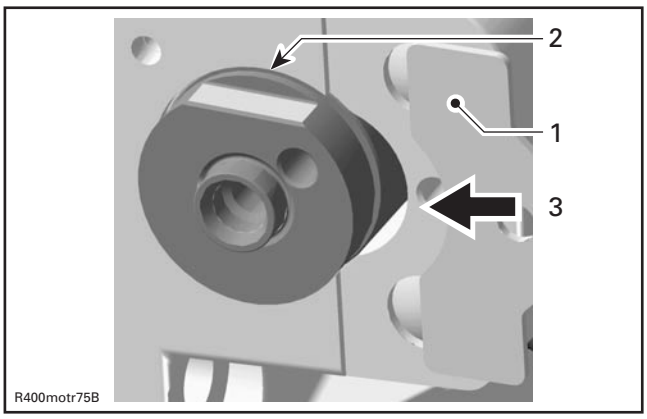

1. Camshaft retaining plate position
2. Slot retaining camshaft
3. Direction of movement

For other parts, refer to proper installation procedure.

VALVE SPRING

Removal

Remove:

– rocker arms (see ROCKER ARM above)

– cylinder head (see CYLINDER HEAD above).

Compress valve spring **no. 33**; use valve spring compressor clamp (P/N 529 035 724) and valve spring compressor cup (P/N 529 035 725).

⚠ WARNING

Always wear safety glasses when disassembling valve springs. Be careful when unlocking valves. Components could fly away because of the strong spring preload.

https://truckmanualshub.com/

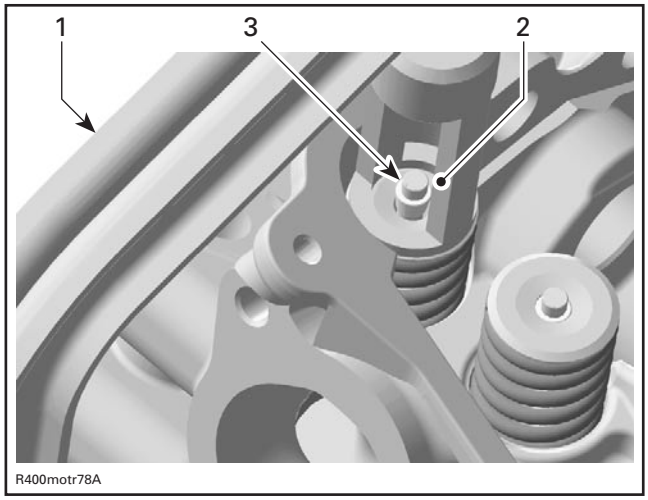

1. Valve spring compressor clamp (P/N 529 035 724)
2. Valve spring compressor cup (P/N 529 035 725)
3. Valve cotter

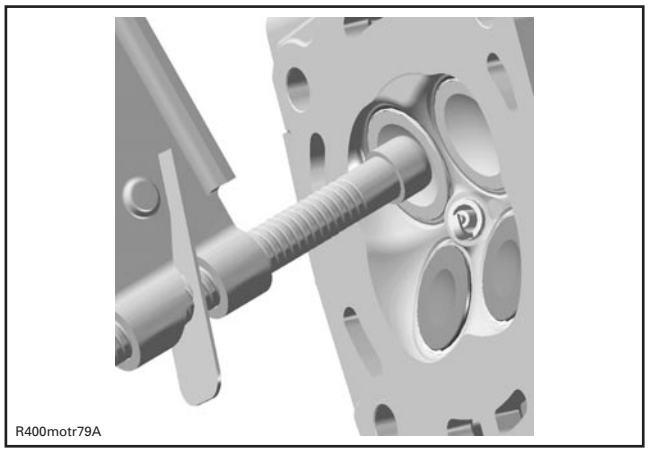

LOCATE VALVE SPRING COMPRESSOR CLAMP IN CENTER OF THE VALVE

Remove valve cotters **no. 34**.

Withdraw valve spring compressor, valve spring retainer **no. 35** and valve spring **no. 33**.

Inspection

Check valve spring for visible damages. If so, replace valve spring.

Check valve spring for free length and straightness.

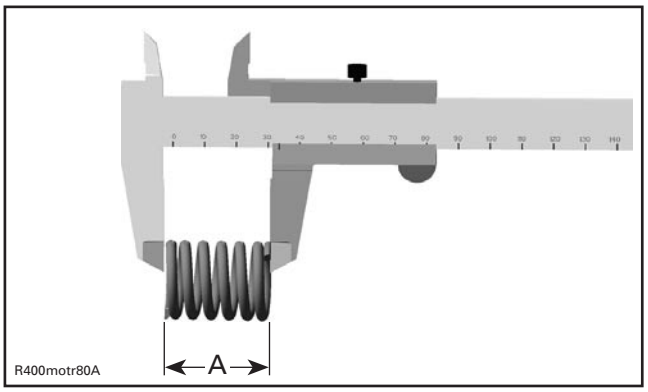

A. Valve spring length

VALVE SPRING FREE LENGTH	
NEW NOMINAL	40.81 mm (1.607 in)
SERVICE LIMIT	39.00 mm (1.535 in)

Replace valves springs if not within specifications.

Installation

For installation, reverse the removal procedure. Pay attention to the following details.

Colored area of the valve spring must be placed on top.

NOTE: Valve cotter must be properly engaged in valve stem grooves.

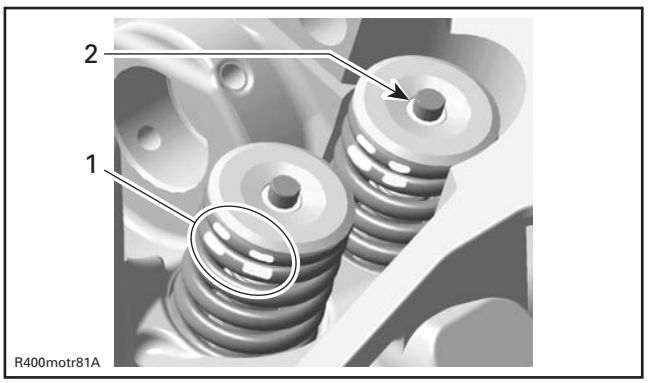

1. Position of the valve spring
2. Valve cotters

https://truckmanualshub.com/

VALVE

Removal

Remove valve spring.

Push valve stem then pull valves **no. 36** (intake) and **no. 37** (exhaust) out of valve guide **no. 40**.

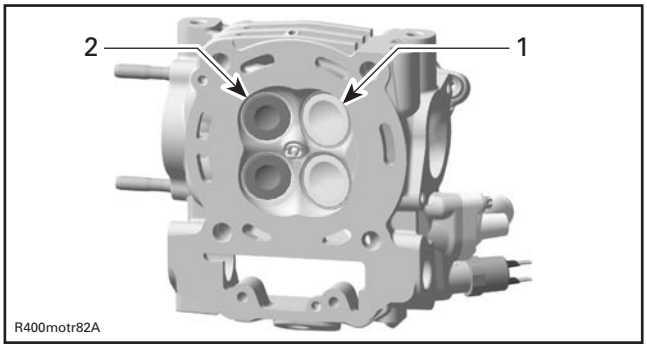

1. Intake valve 31 mm
2. Exhaust valve 27 mm

Remove valve stem seal **no. 38** with special pliers such as Snap-ON YA 8230.

Inspection

Valve Stem Seal

Inspection of valve stem seals is not needed because new seals should always be installed whenever cylinder head is removed.

Valve

Inspect valve surface, check for abnormal stem wear and bending. If out of specification, replace by a new one.

VALVE OUT OF ROUND	
NEW NOMINAL	
EXHAUST	0.005 mm (.0002 in)
INTAKE	
SERVICE LIMIT	
EXHAUST	0.06 mm (.0024 in)
INTAKE	

Valve Stem and Valve Guide Clearance

Measure valve stem and valve guide in three places using a micrometer and a small bore gauge.

NOTE: Clean valve guide to remove carbon deposits before measuring.

Change valve if valve stem is out of specification or has other damages such as wear or friction surface.

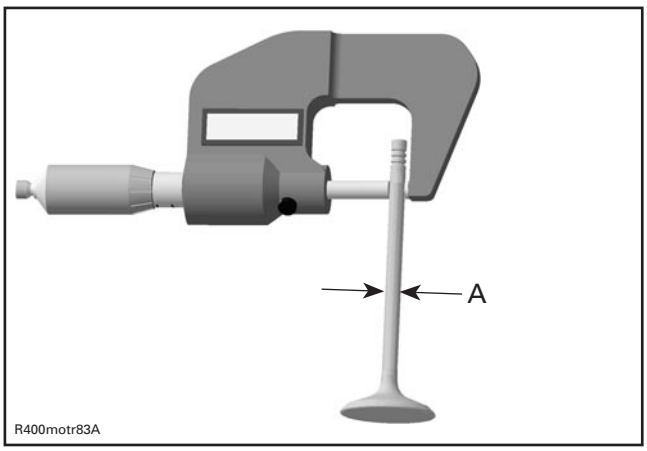

A. Valve stem diameter

https://truckmanualshub.com/

VALVE STEM DIAMETER	
NEW MINIMUM	
EXHAUST	4.956 mm (.1951 in)
INTAKE	4.966 mm (.1955 in)
NEW MAXIMUM	
EXHAUST	4.970 mm (.1957 in)
INTAKE	4.980 mm (.1960 in)
SERVICE LIMIT	
EXHAUST	4.930 mm (.1941 in)
INTAKE	

Replace valve guide out of cylinder head if valve guide is out of specification or has other damages such as wear or friction surface (see VALVE GUIDE PROCEDURE below).

VALVE GUIDE DIAMETER	
SERVICE LIMIT	
EXHAUST	5.050 mm (.1988 in)
INTAKE	

Valve Face and Seat

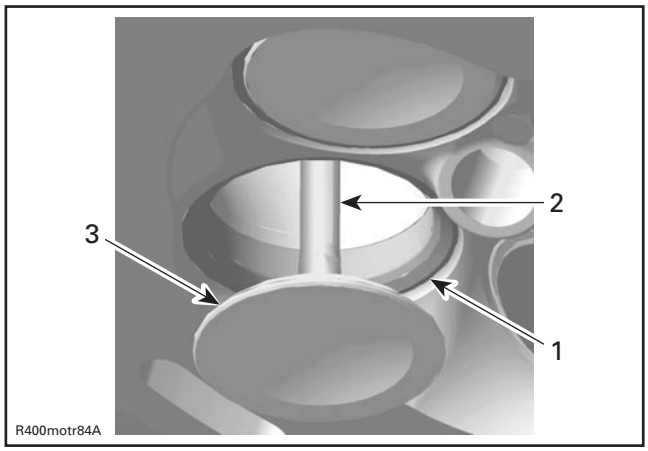

1. Valve seat
2. Exhaust valve contaminated area
3. Valve face (contact surface to valve seat)

Check valve face and seat for burning or pittings and replace valve or cylinder head if there are signs of damage.

Ensure to seat valves properly. Apply some lapping compound to valve face and work valve on its seat with a lapping tool (see VALVE GUIDE PROCEDURE below).

Measure valve face contact width.

NOTE: The location of contact area should be in center of valve seat.

Measure valve seat width using a caliper.

VALVE SEAT CONTACT WIDTH	
NEW	
EXHAUST	1.25 to 1.55 mm (.049 to .061 in)
INTAKE	1.15 to 1.35 mm (.045 to .053 in)
SERVICE LIMIT	
EXHAUST	2 mm (.078 in)
INTAKE	1.8 mm (.07 in)

If valve seat contact width is too wide or has dark spots, replace the cylinder head.

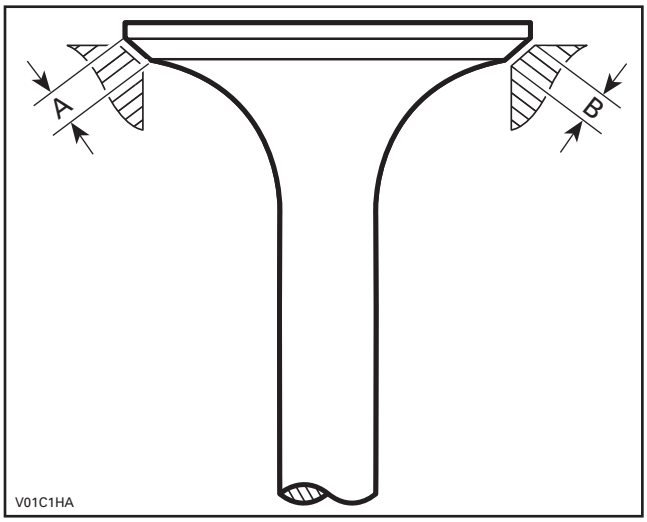

A. Valve face contact width
B. Valve seat contact width

https://truckmanualshub.com/

Installation

For installation, reverse the removal procedure. Pay attention to the following details.

CAUTION: Make sure the thrust washer no. 39 is installed before installing valve stem seal no. 38.

Apply engine oil on valve stem and install it.

CAUTION: Be careful when valve stem is passed through sealing lips of valve stem seal.

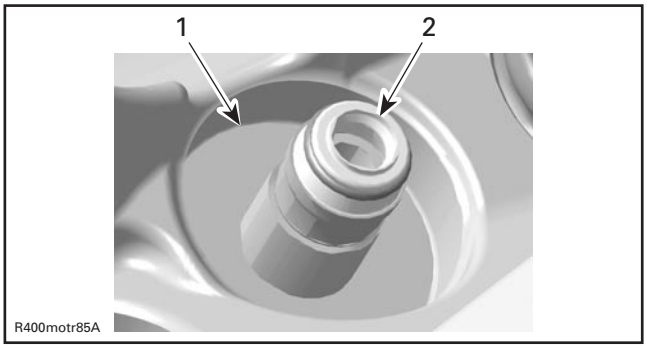

1. Thrust washer
2. Sealing lips of valve stem seal

To ease installation of cotters, apply oil or grease on them so that they remain in place while releasing the spring.

After spring is installed, ensure it is properly locked by tapping on valve stem end with a soft hammer so that valve opens and closes a few times.

CAUTION: An improperly locked valve spring will cause engine damage.

VALVE GUIDE PROCEDURE

Removal

Remove:

– cylinder head (see CYLINDER HEAD above)
– valve spring (see VALVE SPRING above)
– valves (see VALVE above).

NOTE: Clean valve guide area from contamination before removal.

Using valve guide remover (P/N 529 035 924), remove valve guide **no. 40** with a hammer.

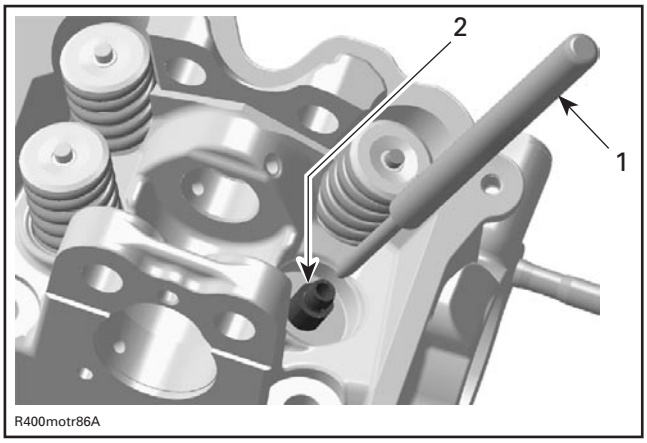

1. Valve guide remover
2. Valve guide

Inspection

Always replace valve stem seals whenever cylinder head is removed.

Clean the valve guide bore before reinstalling the valve guide into cylinder head.

Installation

For installation, reverse the removal procedure. Pay attention to the following details.

Use valve guide installer (P/N 529 035 853) to install valve guide **no. 40**.

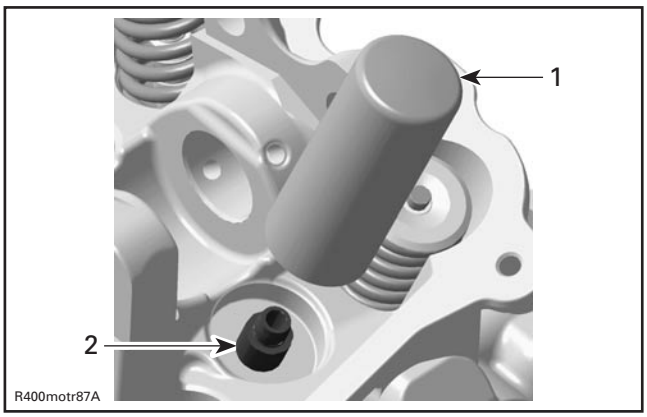

1. Valve guide installer
2. Valve guide

NOTE: Apply anti-seize lubricant (P/N 293 800 070) on valve guide prior to install it into the cylinder head.

https://truckmanualshub.com/

CAUTION: Push valve guide **no. 40** in the cold cylinder head as per following illustration.

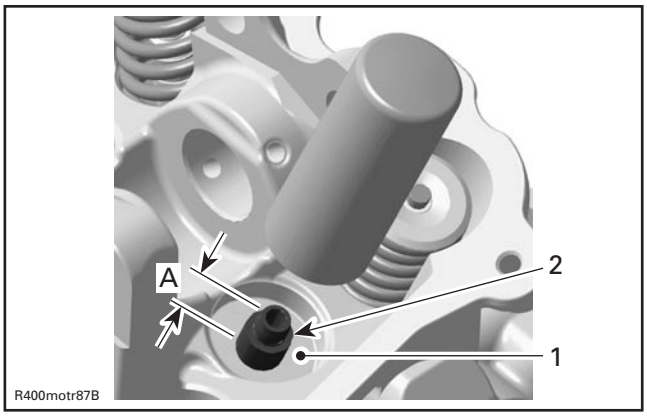

1. Thrust surface of cylinder head
2. Valve guide
A. Measurement from thrust surface to valve guide top

VALVE GUIDE MEASUREMENT A	
NEW MINIMUM	14.00 mm (.5512 in)
NEW MAXIMUM	14.40 mm (.5669 in)

Valve guide to be adjusted in diameter by using a reamer.

VALVE GUIDE DIAMETER	
NEW MINIMUM	
EXHAUST	5.006 mm (.1971 in)
INTAKE	
NEW MAXIMUM	
EXHAUST	5.018 mm (.1976 in)
INTAKE	

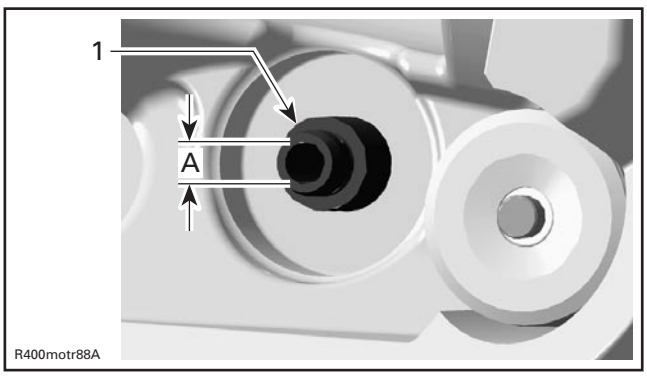

1. Valve guide
A. Valve guide diameter

NOTE: Ensure to turn reamer in the right direction. Use cutting oil and make brakes to clean reamer/valve guide from metal shavings.

Apply some lapping compound to valve face and work valve on its seat with a lapping tool.

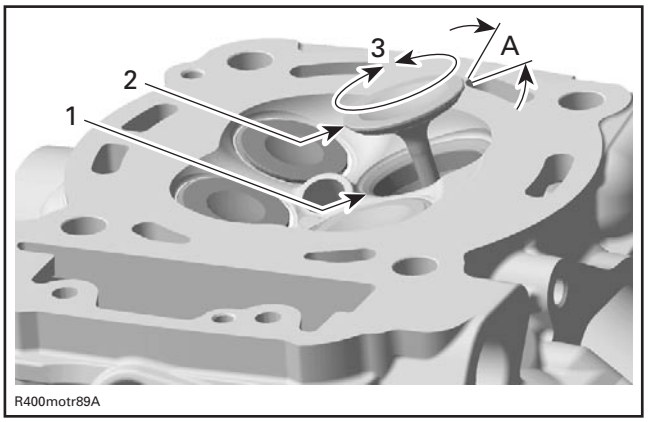

1. Valve seat
2. Valve face (contact surface to valve seat)
3. Turn valve while pushing against cylinder head
A. Valve seat angle 45°

NOTE: Ensure to seat valves properly. Apply marking paste to ease checking contact pattern.

Repeat procedure until valve seat/valve face fits together.

CYLINDER

Removal

Lock crankshaft at TDC compression position, refer to CRANKSHAFT/BALANCER SHAFT, see CRANKSHAFT LOCKING PROCEDURE.

Using the camshaft locking tool (P/N 529 035 926), lock the camshaft at TDC compression position to prevent timing chain stretching.

Remove:

– chain tensioner
  (see CHAIN TENSIONER above)
– decompressor
– camshaft timing gear
– cylinder head (see CYLINDER HEAD above).

https://truckmanualshub.com/

Pull cylinder **no. 41**.

Discard cylinder gasket **no. 42**.

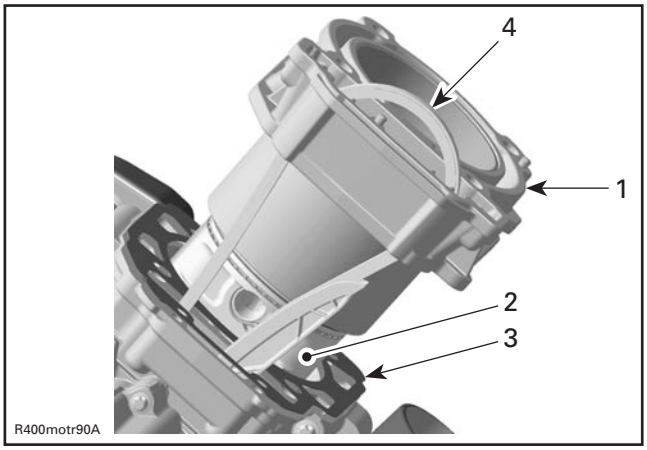

1. Cylinder
2. Piston assembly
3. Cylinder base gasket
4. Camshaft timing chain

Inspection

Cylinder

Check cylinder for cracks, scoring and wear ridges on the top and bottom of the cylinder. If so, replace cylinder.

Cylinder Taper

Measure cylinder bore and if it is out of specifications, replace cylinder and piston ring set **no. 46**.

Measure cylinder bore at 3 recommended positions. See the following illustration.

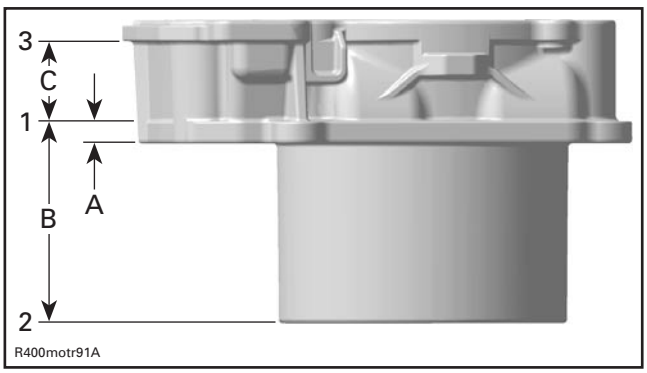

1. First measuring of diameter
2. Second measuring of diameter
3. Third measuring of diameter
A. 7 mm (.276 in) from cylinder bottom
B. 68 mm (2.68 in)
C. 32 mm (1.260 in)

CYLINDER TAPER IN DIAMETER	
NEW MAXIMUM	0.038 mm (.0015 in)
SERVICE LIMIT	0.090 mm (.004 in)

Distance between measurements should not exceed the service limit mentioned above.

Cylinder Out of Round

Measure cylinder diameter in piston axis direction from top of cylinder. Take another measurement 90° from first one and compare.

NOTE: Take the same measuring points like described in CYLINDER TAPER above.

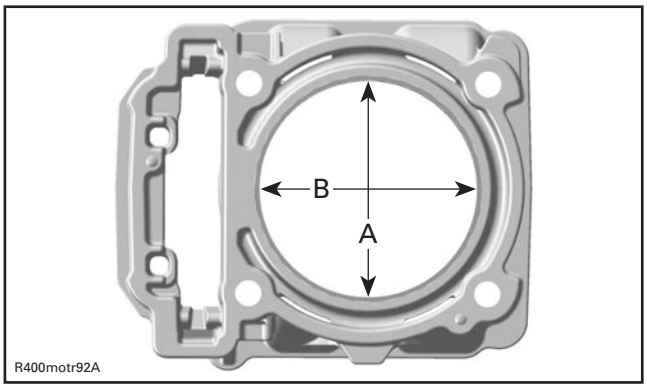

A. Perpendicular to crankshaft axis
B. Parallel to crankshaft axis

CYLINDER OUT OF ROUND	
NEW MAXIMUM	0.015 mm (.0006 in)
SERVICE LIMIT	0.02 mm (.0008 in)

CAUTION: Always replace gasket no. 42 before installing the cylinder.

Installation

For installation, reverse the removal procedure. Pay attention to the following details.

Apply engine oil in the bottom area of the cylinder bore and also on the band of the piston ring compressor tool.

MODELS	PISTON RING COMPRESSOR
OUTLANDER 330	529 035 977
OUTLANDER 400	529 035 919

https://truckmanualshub.com/

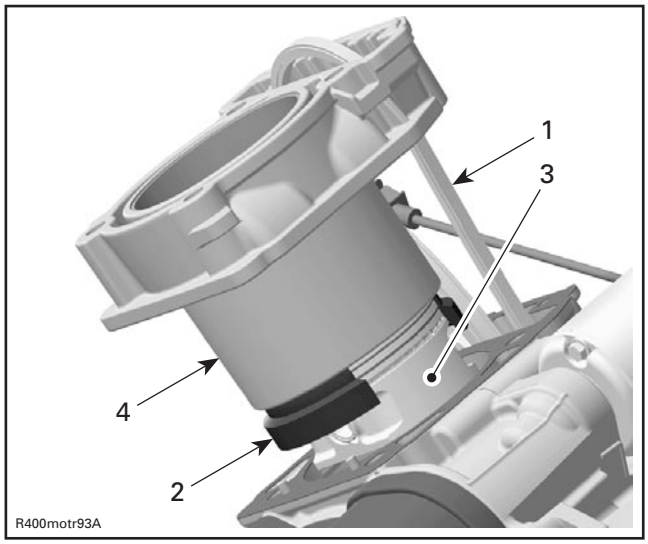

1. Timing chain
2. Piston ring compressor tool
3. Piston
4. Cylinder

NOTE: Put timing chain through the chain pit then put the cylinder in place.

Install cylinder head and the other parts in accordance with the proper installation procedures.

PISTON

Removal

Remove:

– cylinder head (see CYLINDER HEAD above)

– cylinder (see CYLINDER above).

Place a rag under piston and in the area of timing chain compartment.

⚠ WARNING

Piston circlips are spring loaded.

Remove one piston circlip **no. 43** and discard it.

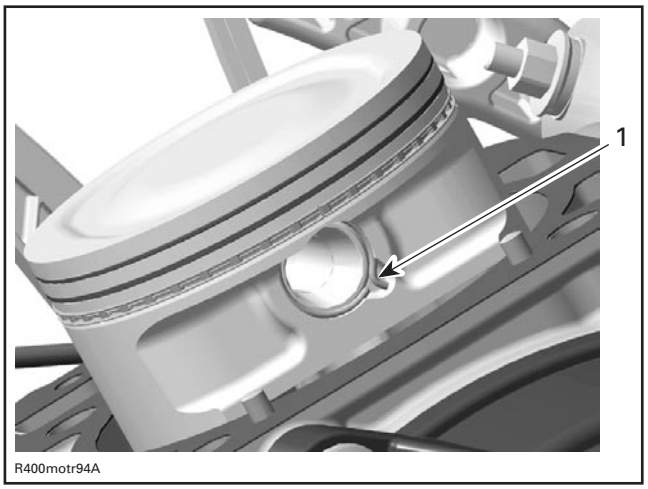

1. Piston circlip

NOTE: The removal of both piston circlips is not necessary to remove piston pin.

Push piston pin **no. 44** out of piston.

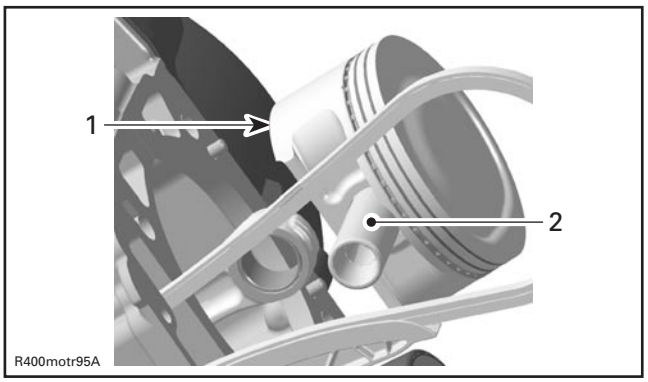

1. Piston
2. Piston pin

Detach piston **no. 45** from connecting rod.

https://truckmanualshub.com/

Inspection

Piston

Inspect piston for scoring, cracking or other damages. Replace piston and piston rings if necessary.

Using a micrometer, measure piston at 8 mm (.315 in) perpendicularly (90°) to piston pin.

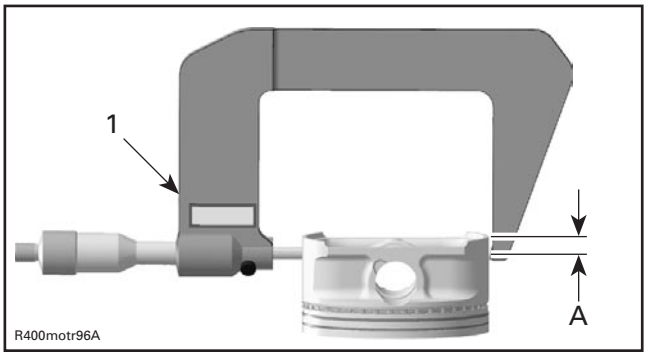

1. Measuring perpendicularly (90°) to piston pin
A. 8 mm (.315 in)

The measured dimension should be as described in the following table. If not, replace piston.

PISTON MEASUREMENT	
NEW NOMINAL	
OUTLANDER 330	81.950 to 81.966 mm (3.2264 to 3.2270 in)
OUTLANDER 400	90.950 to 90.966 mm (3.5807 to 3.5813 in)

Piston/Cylinder Clearance

Adjust and lock a micrometer to the piston dimension.

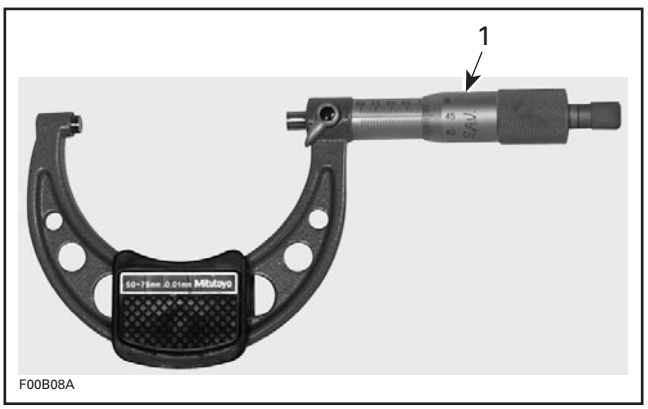

1. Micrometer set to the piston dimension

With the micrometer set to the dimension, adjust a cylinder bore gauge to the micrometer dimension and set the indicator to 0 (zero).

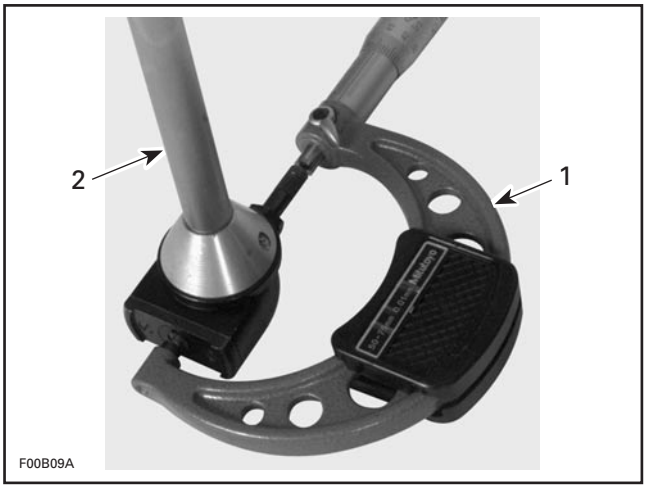

1. Use the micrometer to set the cylinder bore gauge
2. Dial bore gauge

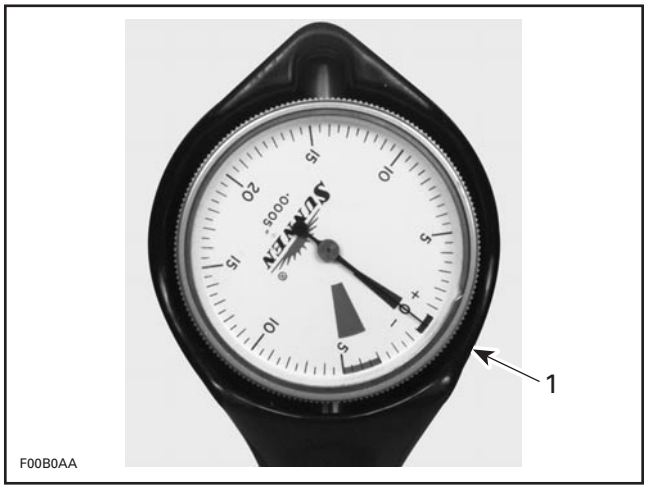

TYPICAL
1. Indicator set to 0 (zero)

Position the dial bore gauge 20 mm (.787 in) above cylinder base, measuring perpendicularly (90°) to piston pin axis.

Read the measurement on the cylinder bore gauge. The result is the exact piston/cylinder wall clearance.

PISTON/CYLINDER CLEARANCE	
NEW NOMINAL	
OUTLANDER 330	0.057 to 0.087 mm (.0022 to .0034 in)
OUTLANDER 400	0.027 to 0.057 mm (.0011 to .0022 in)
SERVICE LIMIT	
ALL MODELS	0.010 mm (.004 in)

https://truckmanualshub.com/

NOTE: Make sure used piston is not worn. See PISTON MEASUREMENT above.

If clearance exceeds specified tolerance, replace cylinder.

NOTE: Make sure the cylinder bore gauge indicator is set exactly at the same position as with the micrometer, otherwise the reading will be false.

Piston Pin

Using synthetic abrasive woven, clean piston pin from deposits.

Inspect piston pin for scoring, cracking or other damages.

Measure piston pin. See the following illustration for the proper measurement positions.

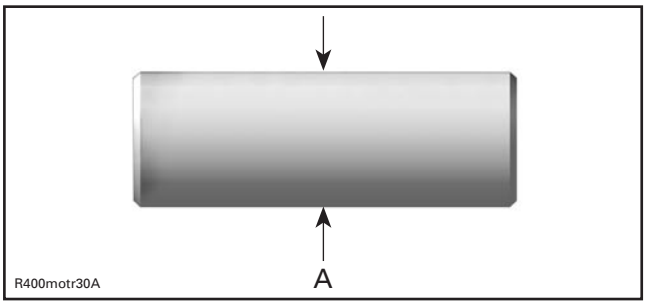

A. Piston pin diameter

PISTON PIN DIAMETER	
NEW MINIMUM	19.996 mm (.7872 in)
NEW MAXIMUM	20.000 mm (.7874 in)
SERVICE LIMIT	19.980 mm (.7866 in)

Replace piston pin if diameter is out of specifications.

Piston Pin/Connecting Rod Bushing Clearance

Measure inside diameter of connecting rod.

CONNECTING ROD SMALL END DIAMETER	
NEW MINIMUM	20.010 mm (.7878 in)
NEW MAXIMUM	20.020 mm (.7881 in)
SERVICE LIMIT	20.060 mm (.7898 in)

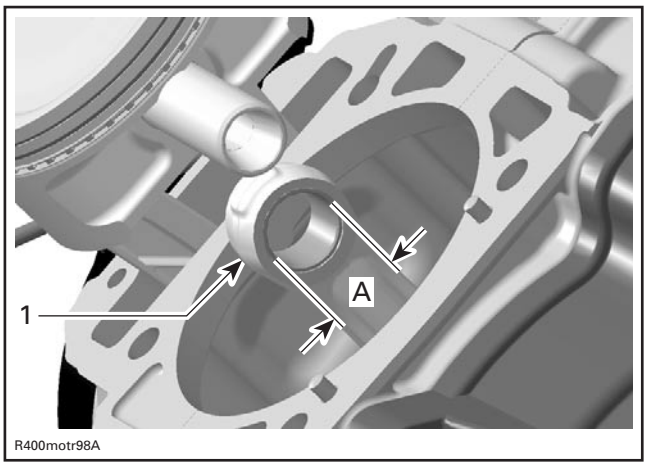

1. Connecting rod small end
A. Connecting rod small end diameter

Replace crankshaft if diameter of connecting rod small end is out of specifications. Refer to CRANKSHAFT/BALANCER SHAFT for removal procedure.

Installation

For installation, reverse the removal procedure. Pay attention to the following details.

Apply engine oil on the piston pin.

Insert piston pin into piston and connecting rod.

CAUTION: Take care that piston will be installed with the punched arrow on piston top to the exhaust side.

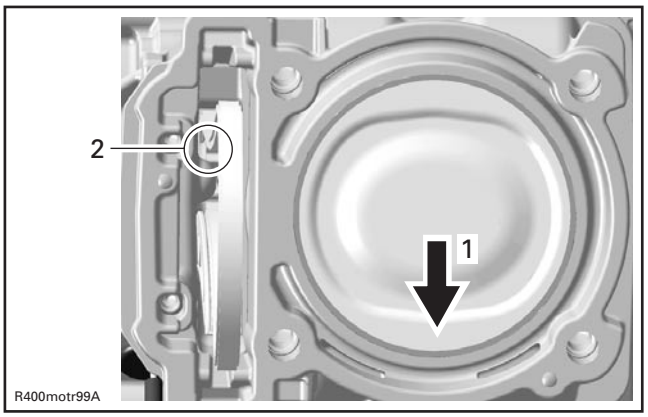

1. Arrow should indicate to the exhaust side
2. Area of timing chain compartment

Use the piston circlip installer (P/N 529 035 921) to assemble the new piston circlip as per following procedure:

https://truckmanualshub.com/

CAUTION: Always replace disassembled piston circlip(s) by new ones. Place a rag on cylinder base to avoid dropping the circlip inside the engine.

– Place circlip **no. 43** in sleeve as per following illustration.

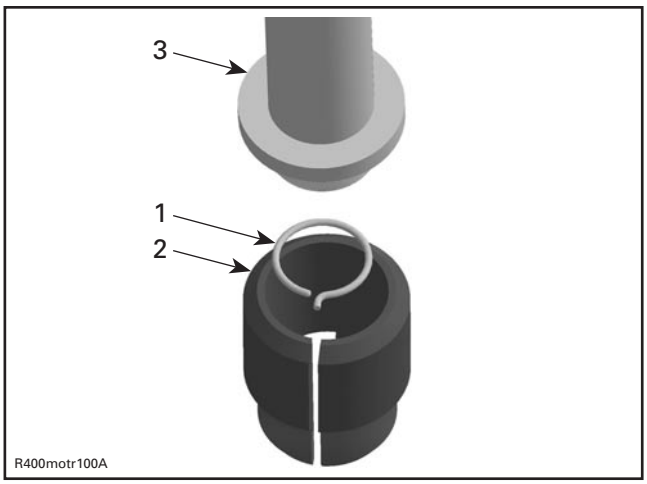

1. Circlip
2. Sleeve
3. Assembly jig from piston clip installer

– Push taper side of assembly jig until circlip reaches middle of sleeve.
– Align sleeve with piston pin axis and push assembly jig until circlip engages in piston.

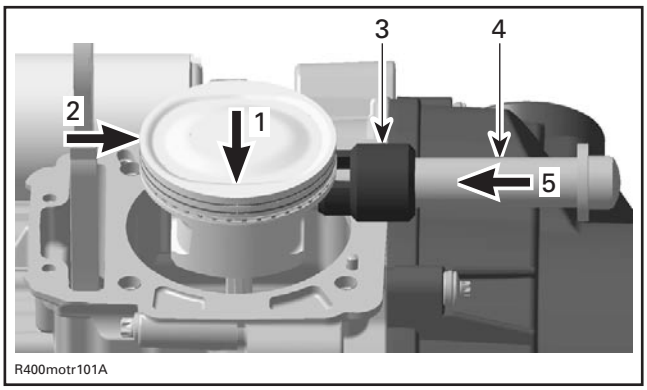

1. Arrow should indicate to the exhaust side
2. Hold piston while pushing circlip in place
3. Sleeve
4. Assembly jig
5. Direction to push circlip

NOTE: Take care that the hook of the piston circlip is positioned properly.

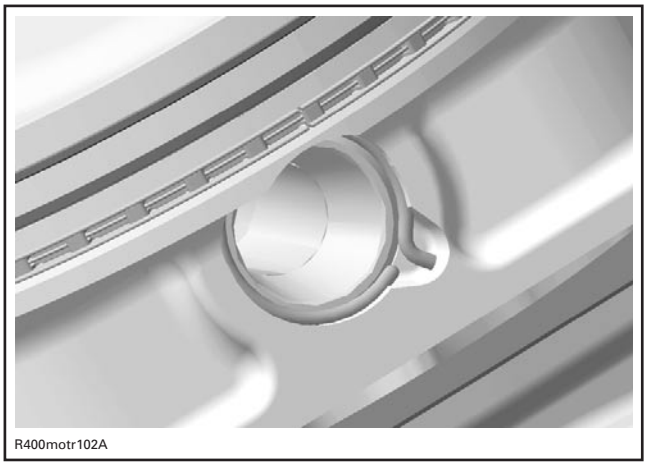

CORRECT POSITION OF THE PISTON CIRCLIP

PISTON RINGS

Removal

Remove:

– cylinder head
– cylinder
– piston pin.

Inspection

Ring/Piston Groove Clearance

Using a feeler gauge measure each ring/piston groove clearance. If the clearance is too large, the piston and the piston rings should be replaced.

RING/PISTON GROOVE CLEARANCE	
NEW MINIMUM	
UPPER COMPRESSION RING	0.03 mm (.0012 in)
LOWER COMPRESSION RING	0.02 mm (.0008 in)
OIL SCRAPER RING	0.01 mm (.0004 in)
NEW MAXIMUM	
UPPER COMPRESSION RING	0.070 mm (.0028 in)
LOWER COMPRESSION RING	0.060 mm (.0026 in)
OIL SCRAPER RING	0.045 mm (.0018 in)
SERVICE LIMIT	
ALL	0.15 mm (.0059 in)

https://truckmanualshub.com/

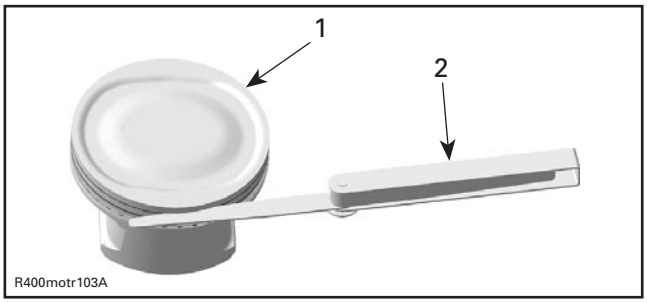

1. Piston
2. Feeler gauge

Ring End Gap

RING END GAP	
NEW MINIMUM	
UPPER COMPRESSION RING	0.20 mm (.008 in)
LOWER COMPRESSION RING	0.20 mm (.008 in)
OIL SCRAPER RING	0.20 mm (.008 in)
NEW MAXIMUM	
UPPER COMPRESSION RING	0.40 mm (.014 in)
LOWER COMPRESSION RING	0.40 mm (.014 in)
OIL SCRAPER RING	0.70 mm (.028 in)
SERVICE LIMIT	
ALL	1.5 mm (.059 in)

Measure position for ring end gap in the area of 8 to 16 mm (.315 to .630 in) from top of cylinder.

NOTE: In order to correctly position the ring in the cylinder, use piston as a pusher.

Using a feeler gauge, check ring end gap. Replace ring if gap exceeds above described specified tolerance.

Installation

For installation, reverse the removal procedure. Pay attention to the following details.

NOTE: First install spring and then rings of oil scraper ring.

Install the oil scraper ring first, then the lower compression ring with the word “N and TOP “ facing up, then the upper compression ring with the word “N and TOP“ facing up.

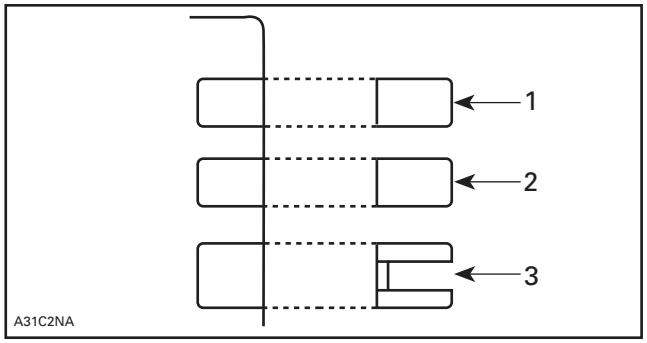

1. Upper compression ring
2. Lower compression ring
3. Oil scraper ring

CAUTION: Ensure that top and second rings are not interchanged.

NOTE: Use a ring expander to prevent breakage during installation. The oil ring must be installed by hand.

Check that rings rotate smoothly after installation.

Space the piston ring end gaps 120° apart and do not align the gaps with the piston pin bore or the thrust side axis.

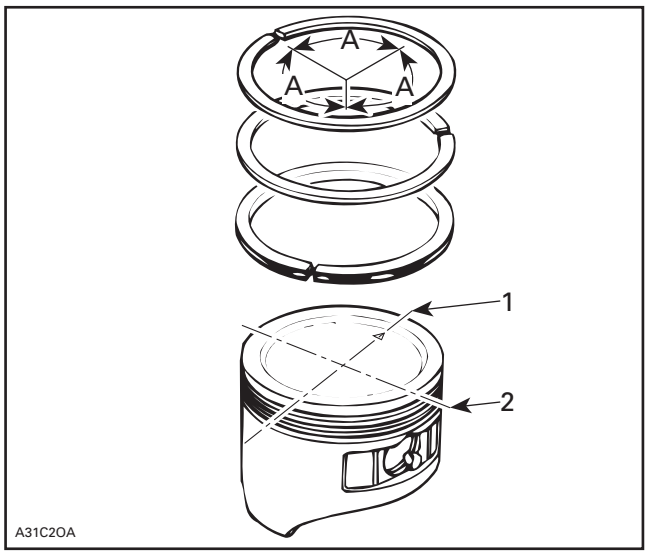

1. DO NOT align ring gap with piston thrust side axis
2. DO NOT align ring gap with piston pin bore axis
A. 120°

https://truckmanualshub.com/

https://truckmanualshub.com/

CRANKSHAFT/BALANCER SHAFT

CRANKCASE

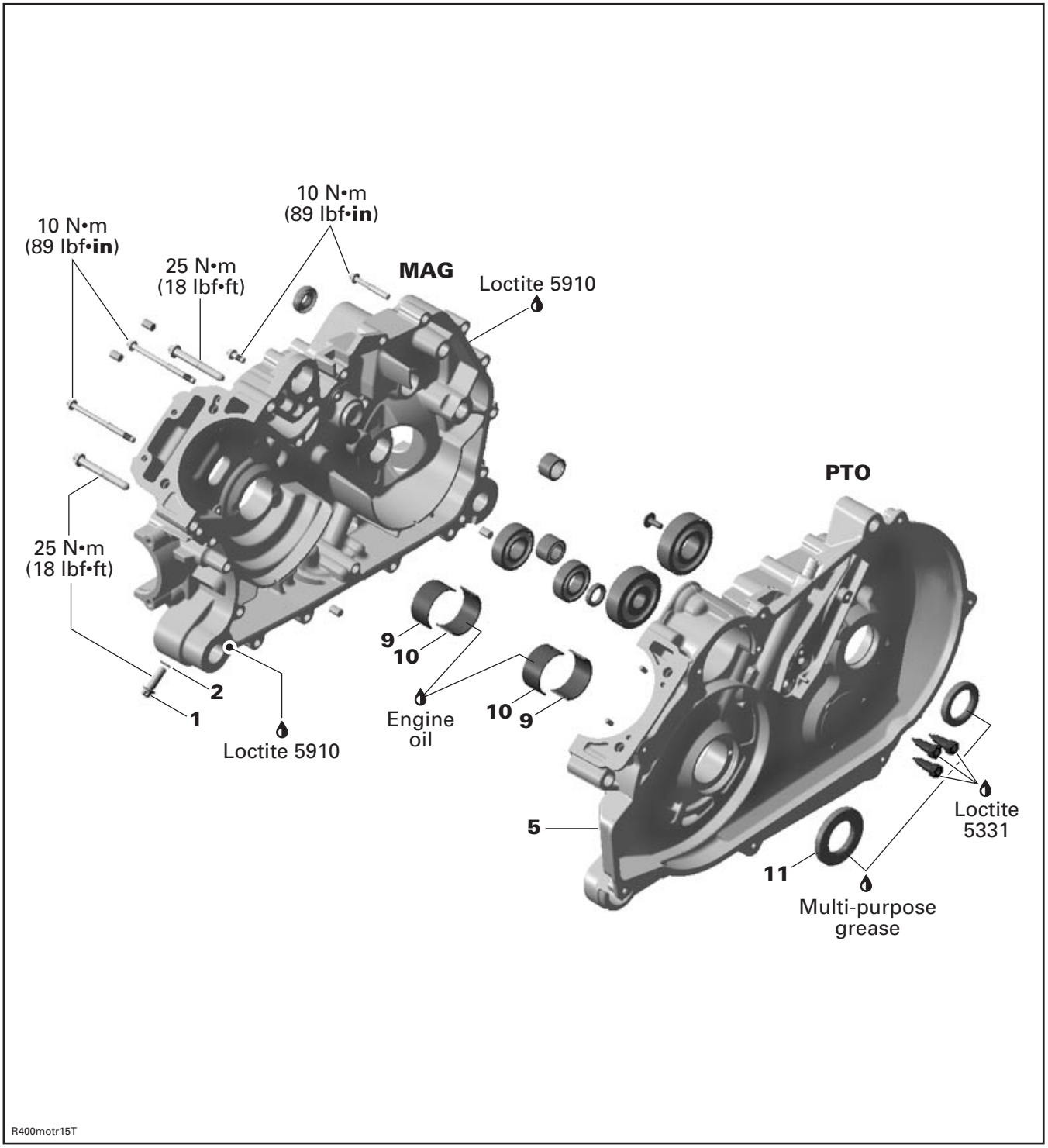

https://truckmanualshub.com/

CRANKSHAFT/BALANCER SHAFT

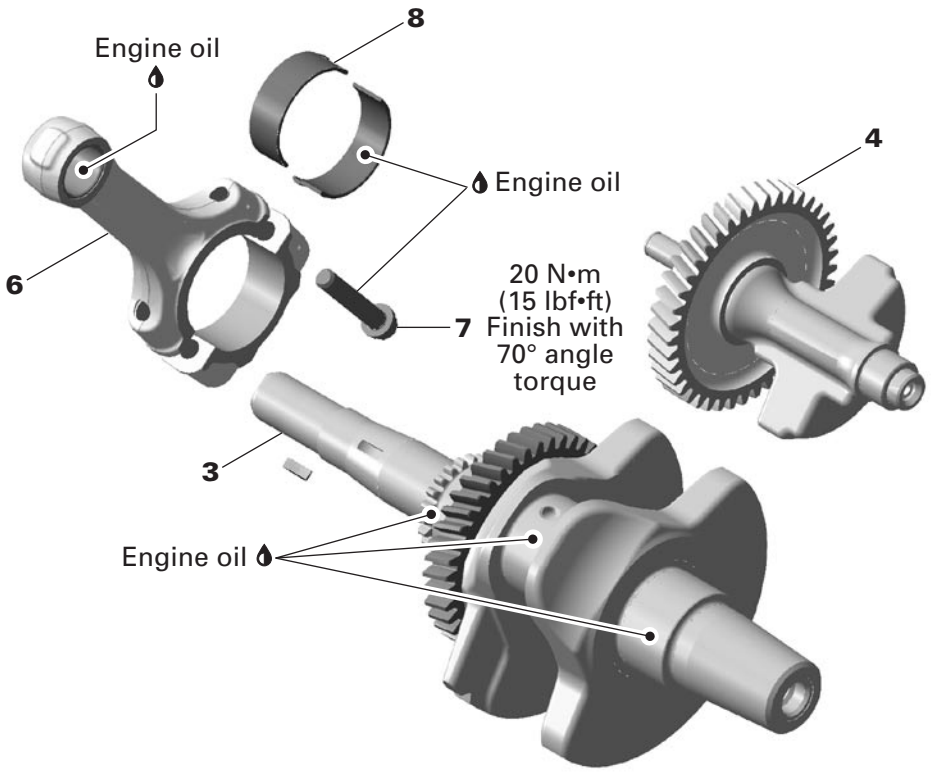

R400motr16S

https://truckmanualshub.com/

GENERAL

During assembly/installation, use the torque values and service products as in the exploded views.

Clean threads before applying a threadlocker. Refer to SELF-LOCKING FASTENERS and LOCTITE APPLICATION at the beginning of this manual for complete procedure.

⚠ WARNING

Torque wrench tightening specifications must strictly be adhered to.

Locking devices (ex.: locking tabs, elastic stop nuts, self-locking fasteners, etc.) must be installed or replaced with new ones where specified. If the efficiency of a locking device is impaired, it must be renewed.

CRANKSHAFT LOCKING PROCEDURE

Removal

Unplug spark plug cable then remove the spark plug.

Remove valve cover (refer to CYLINDER AND HEAD).

To place piston at TDC, pull rewind starter to rotate crankshaft until piston is at TDC compression position.

Remove screw **no. 1** and sealing washer **no. 2**.

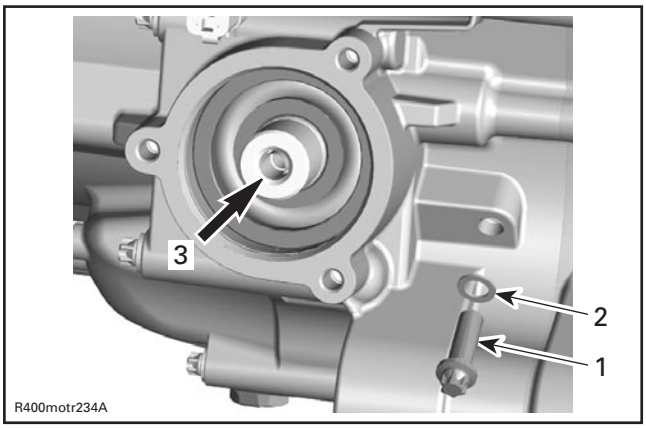

1. *Screw*
2. *Sealing washer*
3. *Output shaft on front side of vehicle*

Use a screwdriver to check if groove in crankshaft is aligned with the hole.

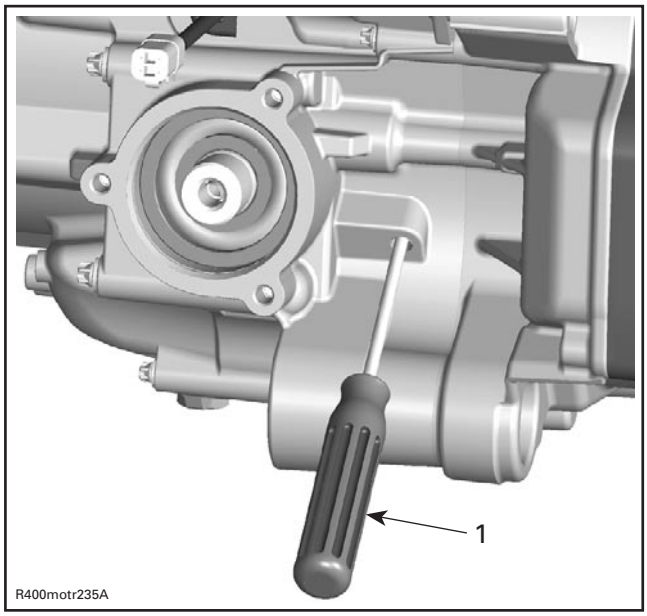

1. *Screwdriver*

Lock crankshaft with crankshaft locking bolt (P/N 529 035 617).

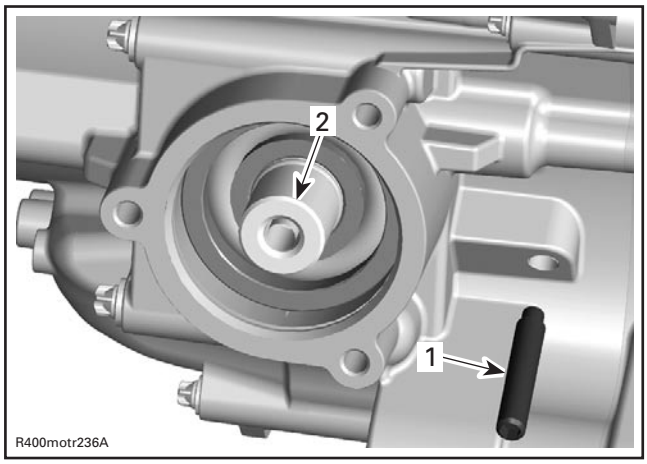

1. *Crankshaft locking bolt*
2. *Front output shaft area*

Install camshaft locking tool (P/N 529 035 926).

NOTE: At piston TDC, the printed marks on the camshaft timing gear have to be parallel to cylinder head base as per following illustration.

https://truckmanualshub.com/

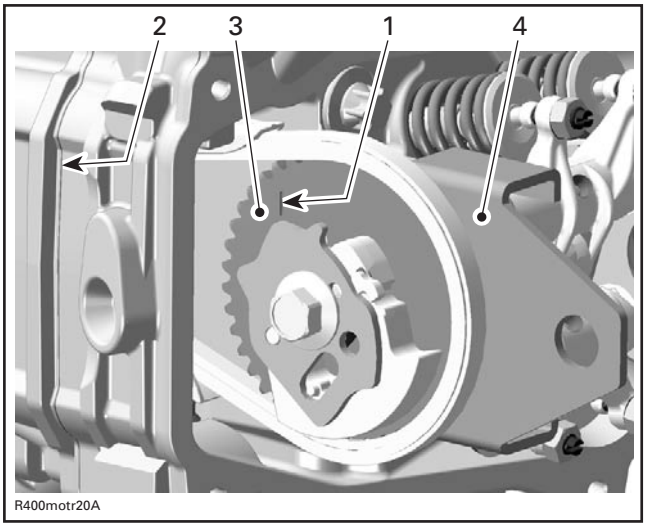

1. Printed mark on camshaft timing gear
2. Cylinder head base
3. Camshaft timing gear
4. Camshaft locking tool

NOTE: The Outlander 330 is not equipped with a decompressor system.

TIMING CHAIN

Inspection

Distance between chain tensioner guide and end of chain tensioner housing is a general information about the valve train (chain) condition.

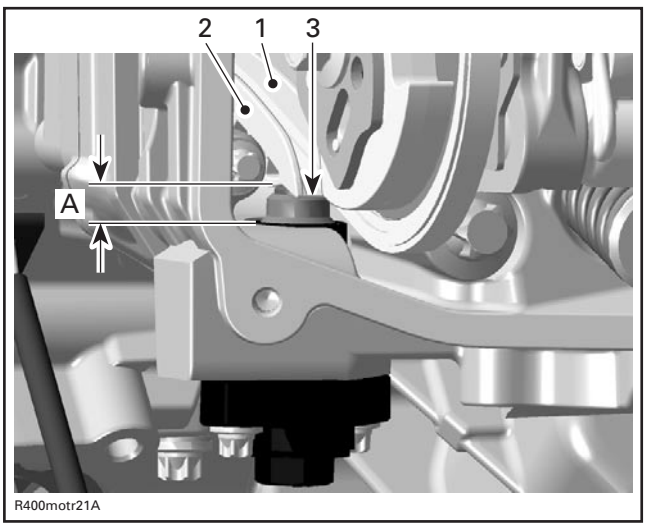

1. Timing gear
2. Chain tensioner guide
3. Chain tensioner plunger
A. Chain tensioner plunger protrusion

CHAIN TENSIONER PLUNGER PROTRUSION	
SERVICE LIMIT	18.5 mm to 20 mm (.71 in to .79 in)

If protrusion exceeds service limit, replace timing chain, camshaft timing gear, chain guide and chain tensioner guide at the same time.

Check timing chain on camshaft timing gear for excessive radial play.

Check chain condition for wear and rollers condition.

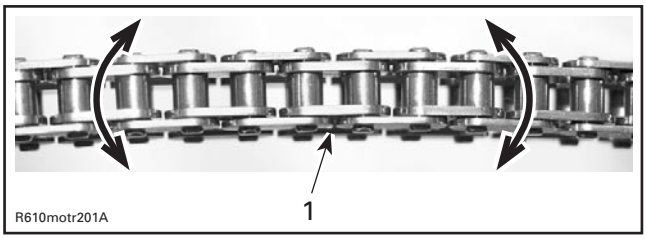

1. Timing chain

If chain is excessively worn or damaged, replace it as a set (camshaft timing gear and timing chain).

Removal

Remove:

- engine from vehicle (refer to REMOVAL AND INSTALLATION)
- valve cover, chain tensioner and camshaft timing gear (refer to CYLINDER AND HEAD)
- magneto cover and rotor (refer to MAGNETO SYSTEM)
- output shaft (refer to GEARBOX).

If the chain is not changed, note the operation direction to reinstall it in the same way.

Installation

The installation is essentially the reverse of the removal procedure but, pay attention to the following details.

Ensure to perform proper valve timing. Lock crankshaft and camshaft at ignition TDC (refer to CYLINDER AND HEAD).

Install chain then, adjust chain tension (refer to CYLINDER AND HEAD).

CAUTION: Improper valve timing will damage engine components.

https://truckmanualshub.com/

TIMING CHAIN GUIDE

Removal

Remove:

– engine from vehicle
(refer to REMOVAL AND INSTALLATION)
– magneto and rotor (refer to MAGNETO)
– bearing screw at the bottom of chain guide.

Pull the chain guide downward to remove it.

Inspection

Check chain tensioner guide for wear, cracks or other damages. Replace if necessary.

Installation

Clean bearing screw threads then apply Loctite 243 on the screw threads.

Install the guide in crankcase housing then torque bearing screw to 10 N•m (89 lbf•**in**).

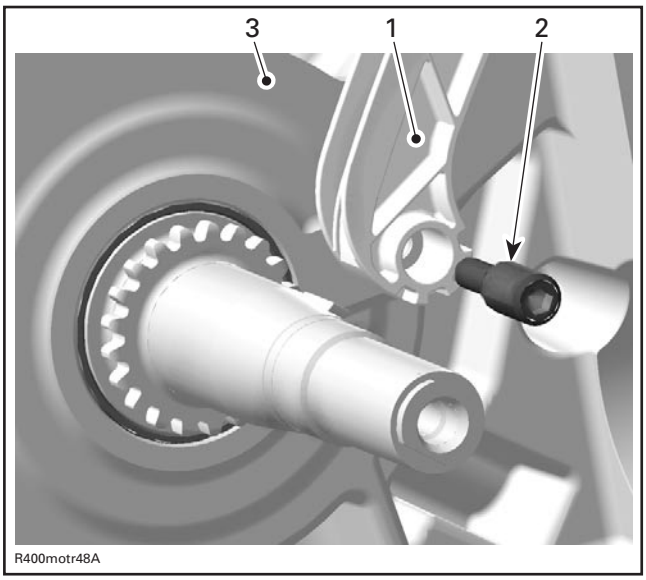

1. *Chain tensioner guide*
2. *Bearing screw*
3. *Crankcase MAG side*

Reinstall all removed parts in accordance with the proper installation procedures.

CRANKCASE

To reach the balancer shaft and the crankshaft, it is necessary to separate the crankcase.

The procedures to remove, inspect and install the balancer shaft and the crankshaft are explain further in this section. For all gearbox parts refer to GEARBOX).

Removal

Remove:

– engine from vehicle
(refer to REMOVAL AND INSTALLATION)
– magneto housing cover and rotor
(refer to MAGNETO SYSTEM)

NOTE: Oil pump removal from crankcase MAG side not necessary, but recommended to see condition of oil pump (refer to LUBRICATION SYSTEM).

– output shaft (refer to GEARBOX)
– timing chain (see TIMING CHAIN above)
– cylinder head and cylinder
(refer to CYLINDER AND HEAD)
– drive pulley (refer to CVT, see DRIVE PULLEY).

Measure axial clearance between the crankshaft **no. 3** and crankcase PTO **no. 5** with a feeler gauge.

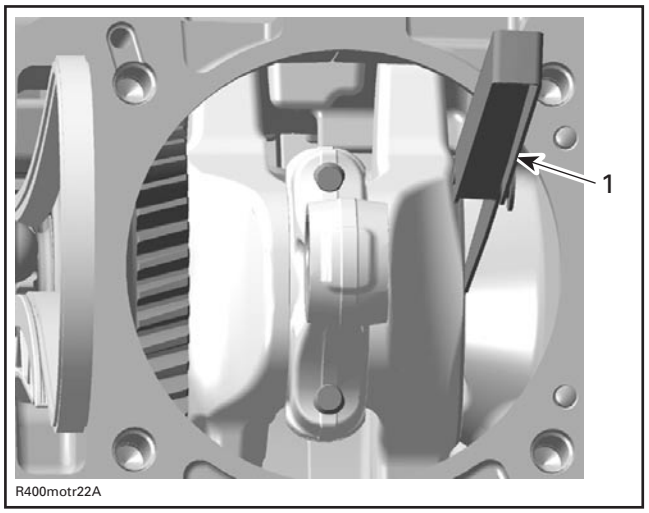

1. *Feeler gauge*

CRANKSHAFT AXIAL CLEARANCE	
MINIMUM (new)	0.1 mm (.0039 in)
MAXIMUM (new)	0.4 mm (.0157 in)

https://truckmanualshub.com/

If measurement is out of specification, inspect butting faces of crankshaft and crankcase (MAG/PTO side) for excessive wear.

Remove:

– timing chain
– intermediate gear
– retaining ring and drive gear.

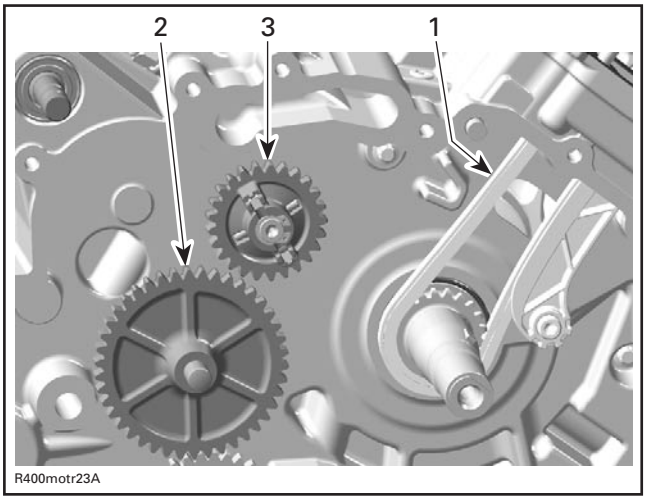

1. Timing chain
2. Intermediate gear
3. Drive gear

Disassembly

Remove screws retaining crankcase MAG.

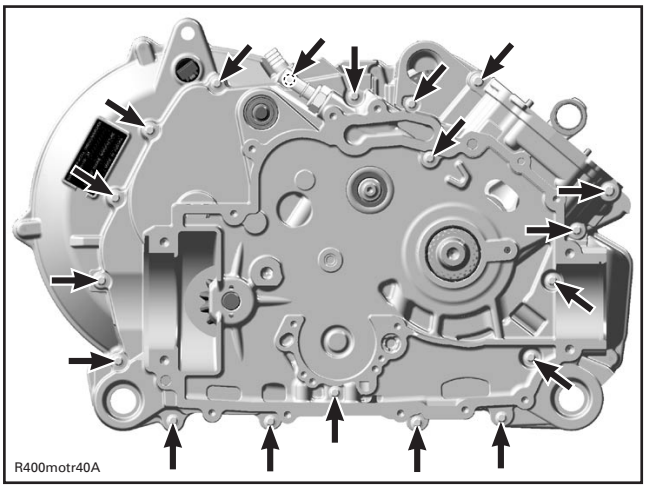

19 SCREWS

Split crankcase housings.

NOTE: Hit with a soft hammer to ease lifting crankcase MAG.

Remove balancer shaft and crankshaft (see BALANCER SHAFT and CRANKSHAFT above).

Inspection

NOTE: To check some parts, it is recommended to remove all components in both crankcase housing.

Clean crankcase from contaminations and blow the oil supply lines with compressed air.

⚠ WARNING

Use safety goggles to avoid injury to your eyes.

Check plain bearings **no. 9** and **no. 10** for scorings or other damages.

Measure plain bearing inside diameter. Replace if the measurement is out of specification.

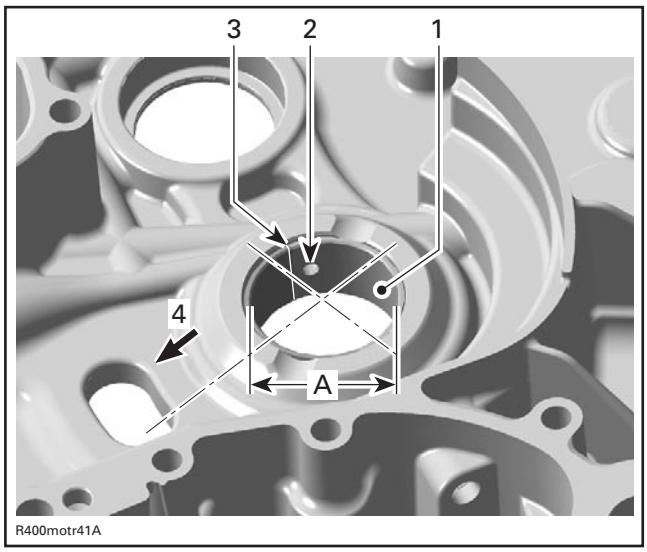

1. MAG plain bearing without groove
2. Oil bore
3. Split of the plain bearing halves
4. Cylinder base direction
A. Plain bearing inside diameter to be measured in area of oil bore

https://truckmanualshub.com/

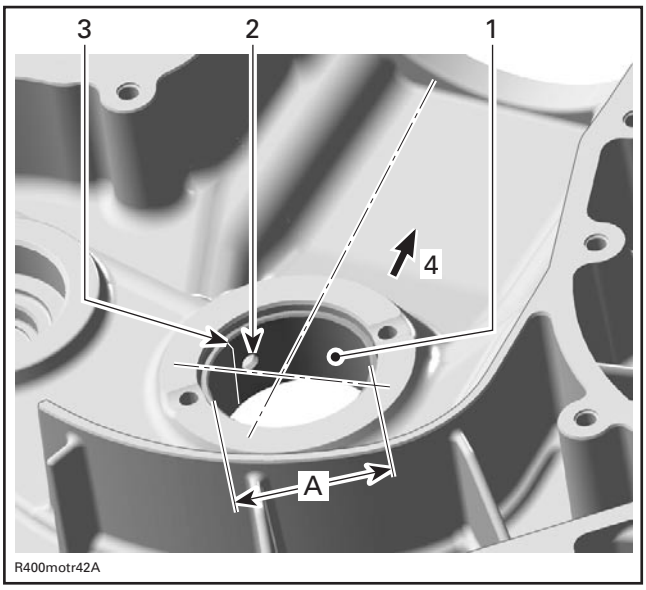

1. PTO plain bearing without groove
2. Oil bore
3. Split of the plain bearing halves
4. Cylinder base direction
A. Plain bearing inside diameter to be measured in area of oil bore

PLAIN BEARING INSIDE DIAMETER (MAG/PTO)	
SERVICE LIMIT	42.070 mm (1.6563 in)

Check oil seal **no. 11** if brittle, hard or otherwise damaged**.** Replace if necessary.

NOTE: The oil seal is removed easily with a flat screwdriver.

Plain Bearing Removal Procedure

CAUTION: Always support crankcase housings properly when ball bearings, needle bearings or plain bearings are removed. Crankcase housing damages may occur if this procedure is not performed correctly.

NOTE: Always use a press for removal or installation of plain bearing halves.

Remove plain bearings **no. 9** and **no. 10** with the plain bearing remover/installer (P/N 529 035 917).

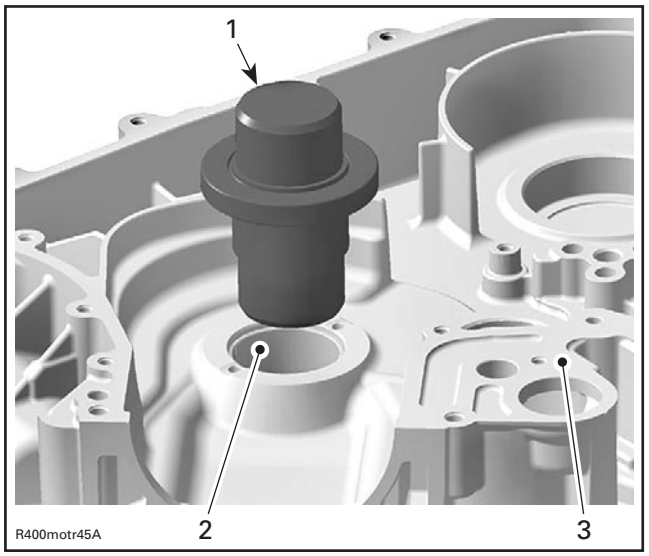

PUSH PLAIN BEARINGS OUTSIDE

1. Plain bearing remover/installer
2. Plain bearing
3. Crankcase PTO

To install the plain bearing turn the plain bearing remover/installer up side down.

NOTE: Use crankcase support MAG (P/N 529 035 916) and crankcase support PTO (P/N 529 035 754) when removing or pushing plain bearing in place.

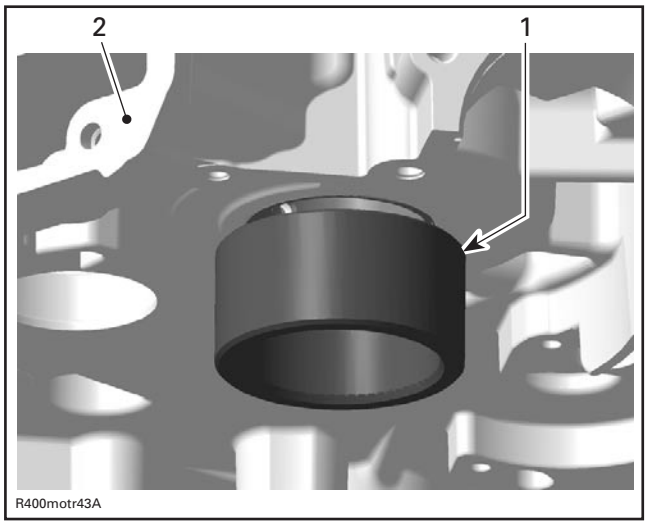

1. Crankcase support MAG (P/N 529 035 916)
2. Crankcase MAG side

https://truckmanualshub.com/

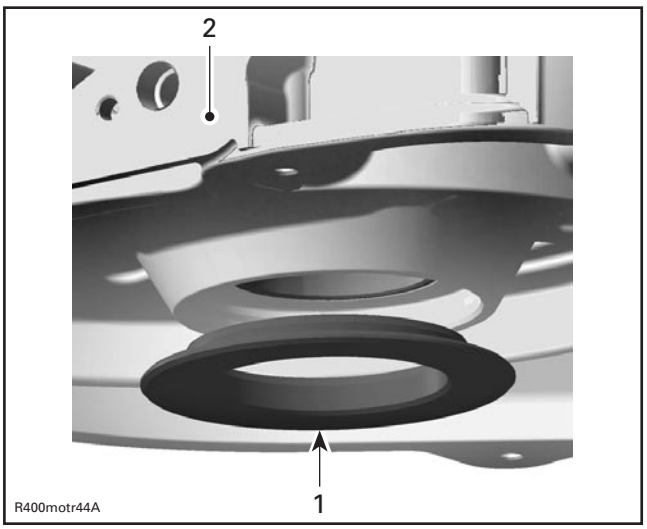

1. Crankcase support PTO (P/N 529 035 754)
2. Crankcase PTO side

NOTE: Mark oil bore position on crankcase to align new plain bearing with crankcase thrust surface.

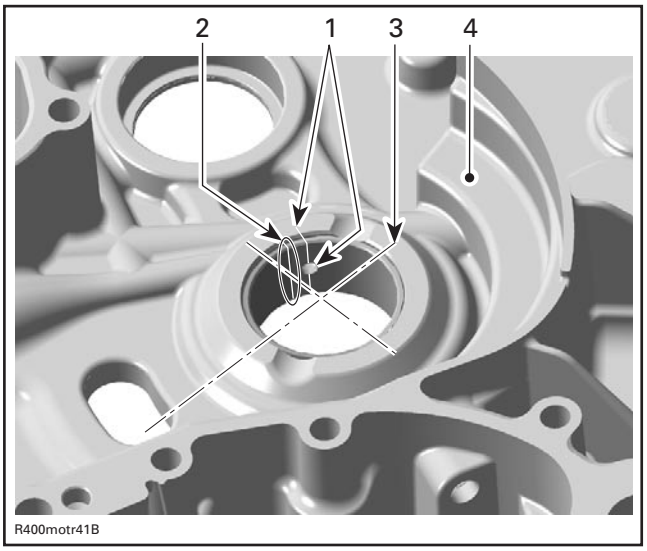

1. Mark on crankcase and oil bore position
2. Split between bearing halves
3. Perpendicular axle to cylinder base
4. Crankcase MAG

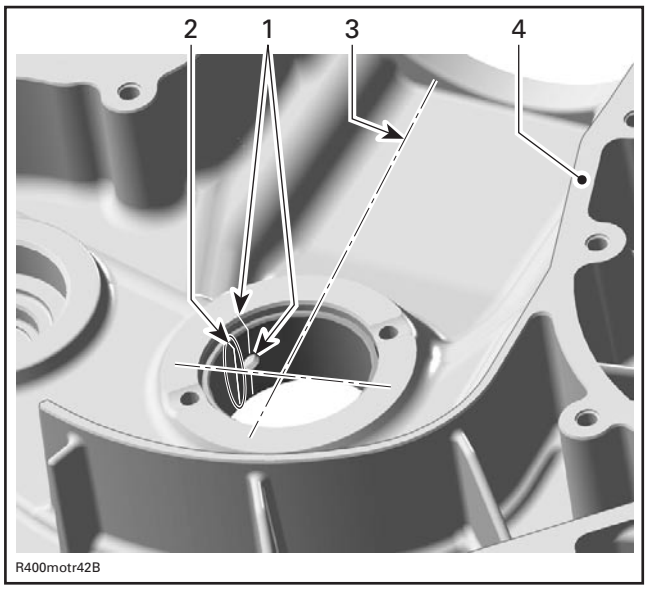

1. Mark on crankcase and oil bore position
2. Split between bearing halves
3. Perpendicular axle to cylinder base
4. Crankcase PTO

CAUTION: Push plain bearings MAG/PTO correctly in place to ensure oil supply to crankshaft (oil bore and split between plain bearing halves).

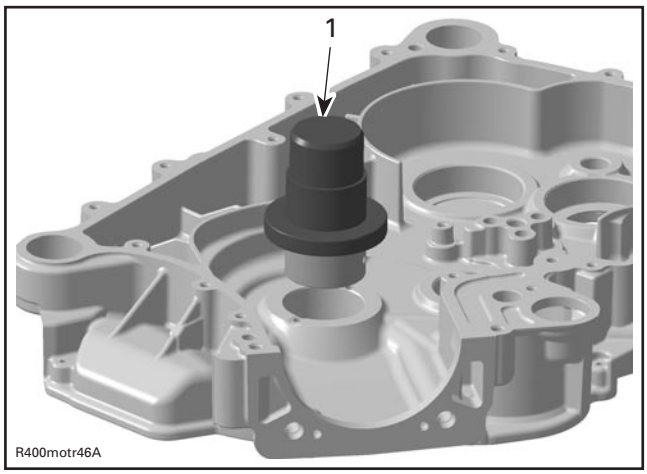

PUSH PLAIN BEARINGS INSIDE

1. Plain bearing installer

https://truckmanualshub.com/

Install a new oil seal **no. 11** with the crankshaft oil seal installer (P/N 529 035 760).

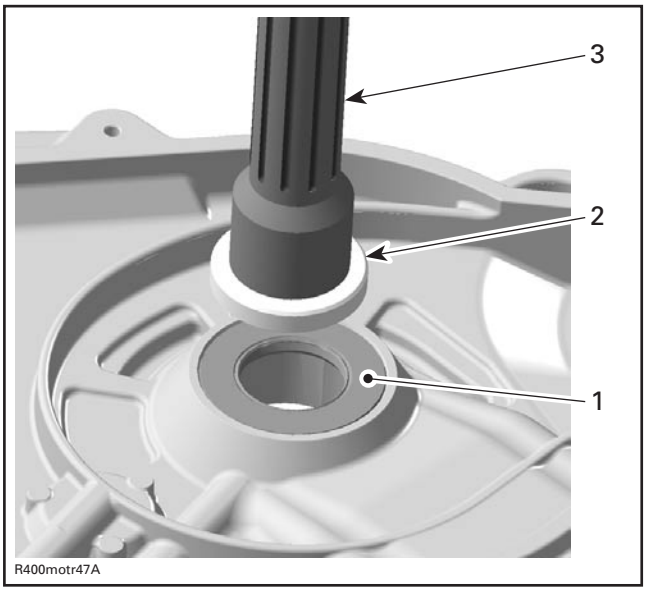

1. *Crankcase PTO oil seal*
2. *Crankshaft oil seal installer*
3. *Insertion jig handle*

Assembly

The assembly of crankcase is the reverse of removal procedure. However, pay attention to the following details.

Clean oil passages and make sure they are not clogged.

Before closing the crankcase, refer to GEARBOX to perform an inspection of gearbox parts and find the proper procedure to clean mating surfaces, apply Loctite 5910 and close crankcase with the proper torquing sequence.

BALANCER SHAFT

Removal

Split crankcase housing (refer to CRANKCASE above).

Remove the crankshaft locking bolt.

Align the dot of crankshaft gear with the balancer shaft gear dot then remove balancer shaft **no. 4**.

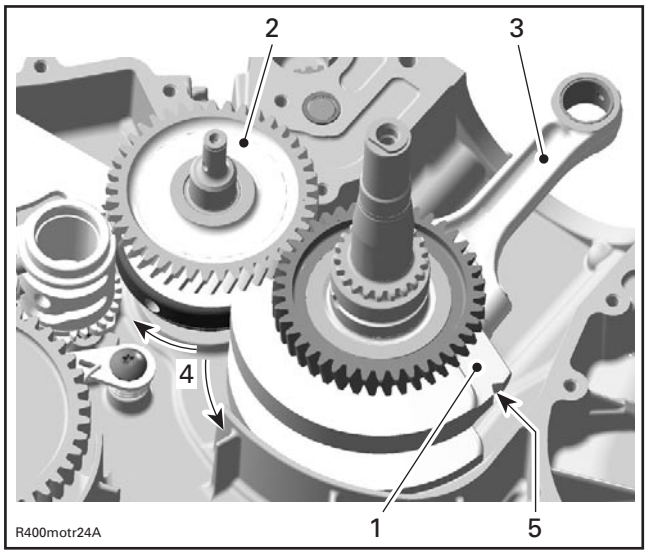

1. *Crankshaft*
2. *Balancer shaft*
3. *Connecting rod*
4. *Rotate crankshaft for balancer shaft removal*
5. *Groove for fixation at TDC*

Inspection

Check balancer shaft and replace if damaged.

Check ball bearings on MAG and PTO side for excessive play and smooth operation. Replace if necessary (see GEARBOX for proper procedure).

If the gear on the balancer shaft is damaged, replace balancer shaft.

Check gears on the crankshaft and replace crankshaft if necessary (refer to CRANKSHAFT below).

Installation

For installation, reverse the removal procedure. Pay attention to following detail.

Align the dot on crankshaft gear with the balancer shaft gear dot.

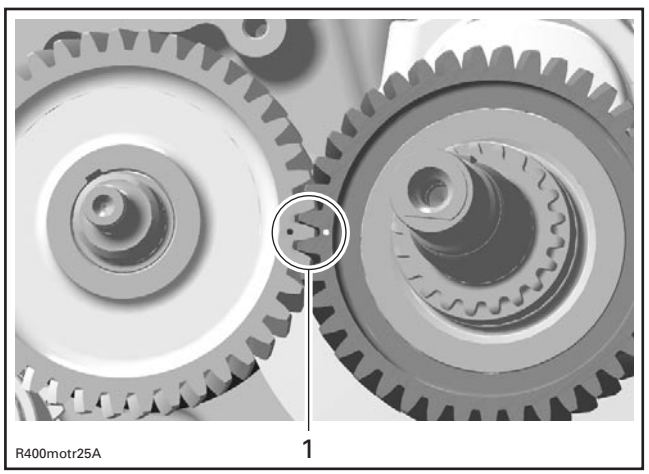

1. *Punched marks located in the gears*

https://truckmanualshub.com/

CRANKSHAFT

Removal

Remove:

– balancer shaft (see BALANCER SHAFT above)
– crankshaft **no. 3**.

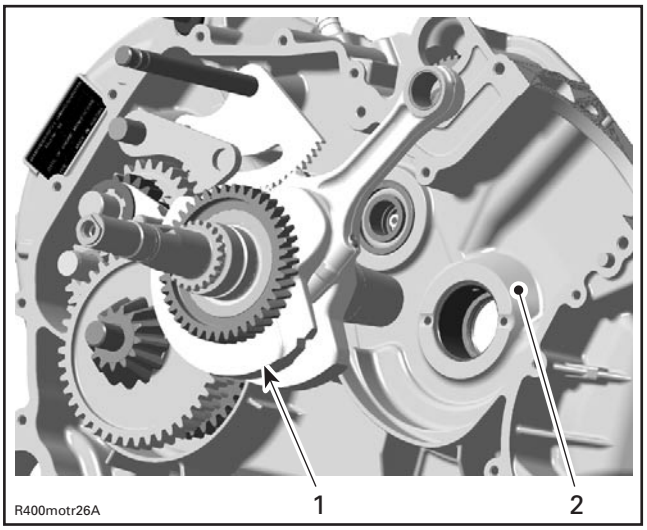

1. Crankshaft
2. Crankcase PTO

Inspection

Replace crankshaft if the gears are worn or otherwise damaged.

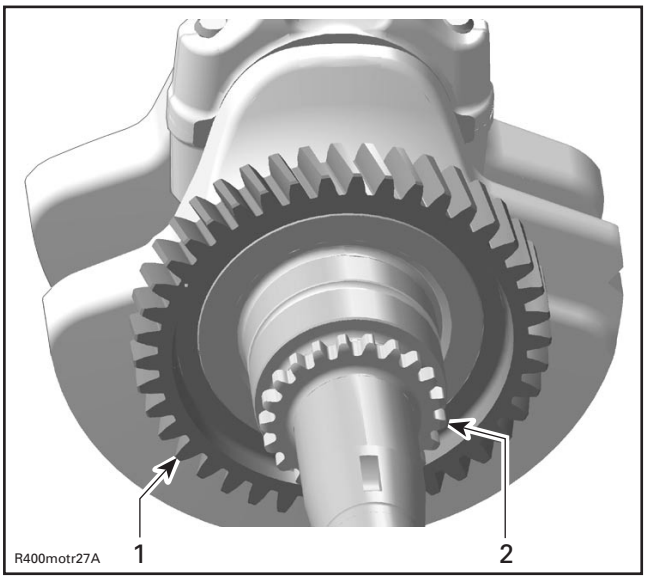

1. Balancer gear
2. Crankshaft timing gear

Connecting Rod Big End Axial Play

Using a feeler gauge, measure distance between butting face of connecting rod and crankshaft counterweight. If the distance exceeds specified tolerance, replace the crankshaft.

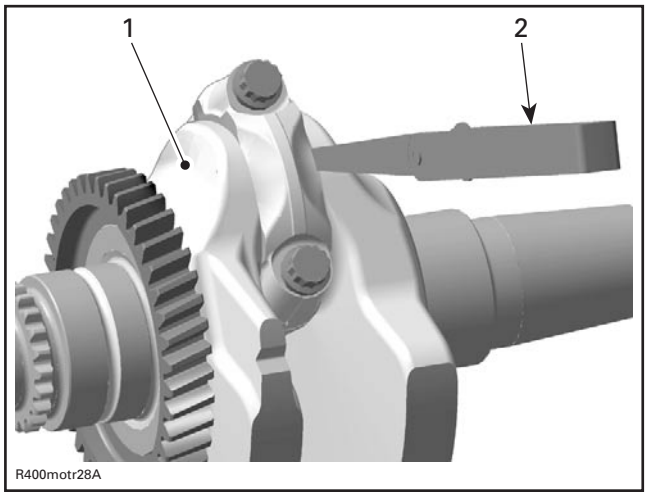

1. Crankshaft
2. Feeler gauge

CONNECTING ROD BIG END	
MINIMUM (new)	0.100 mm (.004 in)
MAXIMUM (new)	0.352 mm (.014 in)
SERVICE LIMIT	0.5 mm (.02 in)

Connecting Rod/Piston Pin Clearance

Measure piston pin. Compare to inside diameter of connecting rod **no. 6**.

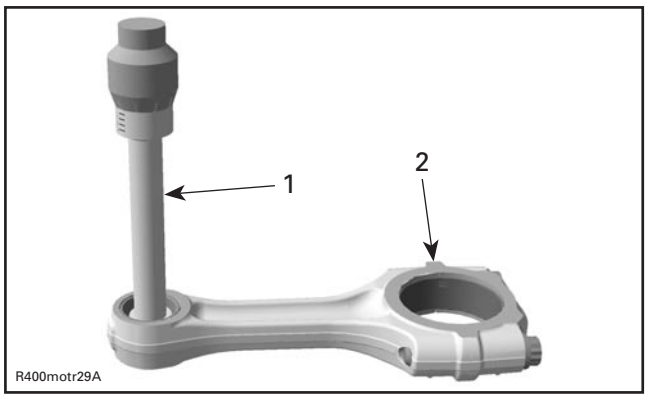

1. Bore gauge
2. Connecting rod

https://truckmanualshub.com/

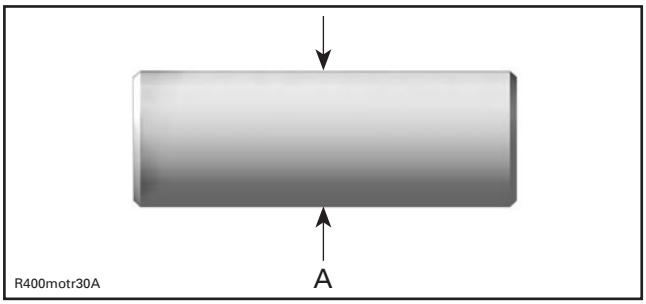

A. Piston pin diameter in the area of the bushing

CONNECTING ROD SMALL END DIAMETER	
MINIMUM (new)	20.010 mm (.7878 in)
MAXIMUM (new)	20.020 mm (.7882 in)
SERVICE LIMIT	20.060 mm (.7898 in)

PISTON PIN DIAMETER	
MINIMUM (new)	19.996 mm (.7872 in)
MAXIMUM (new)	20.000 mm (.7874 in)
SERVICE LIMIT	19.980 mm (.7866 in)

PISTON PIN BORE CLEARANCE	
SERVICE LIMIT	0.080 mm (.0035 in)

If the connecting rod small end diameter is out of specification, replace connecting rod.

Connecting Rod Big End Radial Play

NOTE: Prior to remove connecting rod from the crankshaft, mark big end halves together to ensure a correct reinstallation (cracked surface fits in only one position).

Remove connecting rod **no. 6** from crankshaft **no. 3**.

CAUTION: Always replace connecting rod screws no. 7 if removing the connecting rod. It is recommended to replace bushings no. 8, if connecting rod is installed.

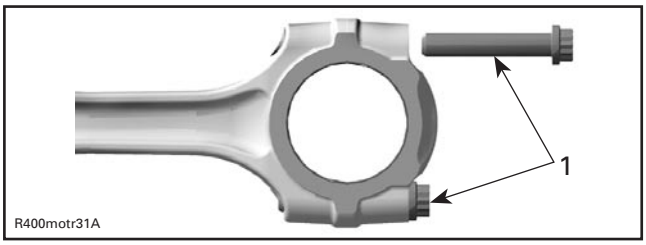

1. Connecting rod screw

Measure crankpin. Compare to inside diameter of connecting rod big end.

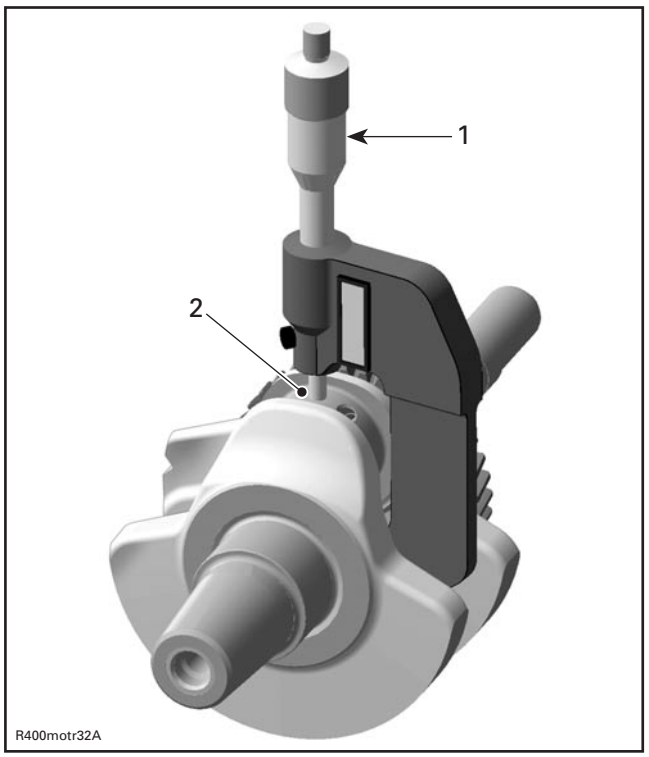

1. Micrometer
2. Crankpin area for bushings

To measure the connecting rod big end diameter, use the **OLD** screws **no. 7**.

Install the **OLD** bushings **no. 8** as they were mounted initially.

Do the torque procedure as described further.

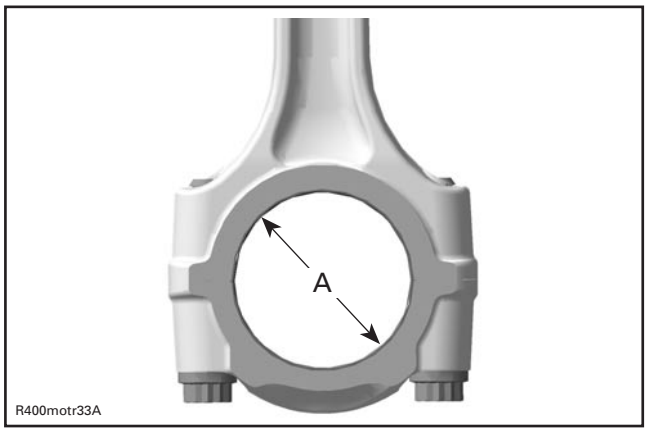

A. Connecting rod big end bushing

CRANKSHAFT PIN DIAMETER	
MINIMUM (new)	40.009 mm (1.575 in)
MAXIMUM (new)	40.025 mm (1.576 in)
SERVICE LIMIT	39.980 mm (1.574 in)

https://truckmanualshub.com/

CONNECTING ROD BIG END DIAMETER	
SERVICE LIMIT	40.100 mm (1.579 in)

CONNECTING ROD BIG END CLEARANCE	
SERVICE LIMIT	0.09 mm (.0035 in)

Crankshaft Radial Play MAG/PTO Side

Measure crankshaft on MAG/PTO side. Compare to inside diameter of MAG/PTO bushing (refer to GEARBOX).

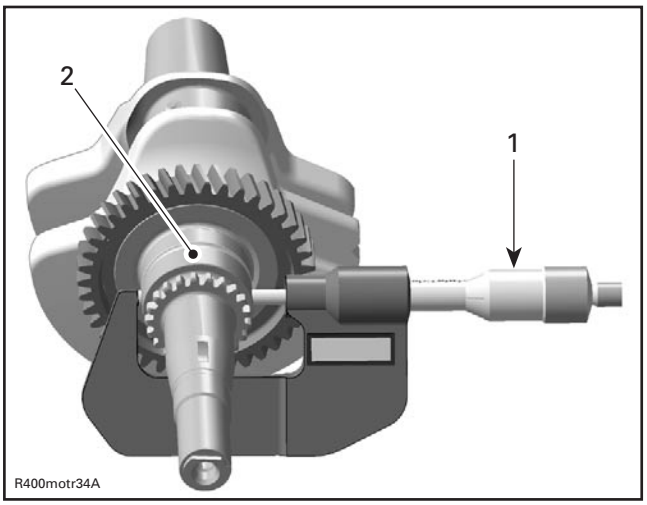

1. Micrometer
2. Crankshaft area for MAG bushing

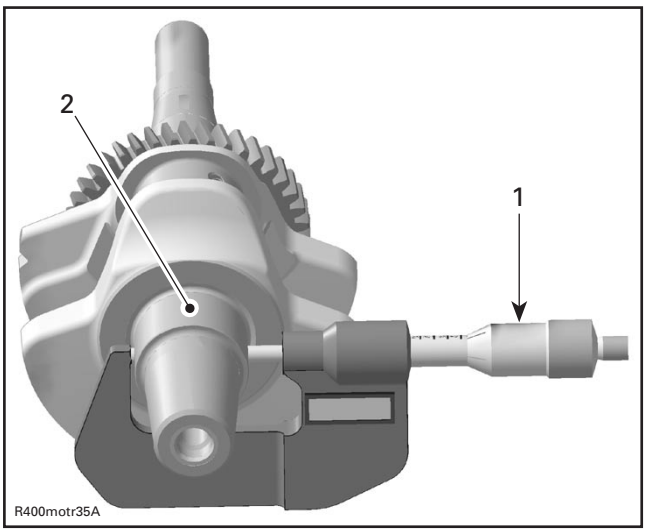

1. Micrometer
2. Crankshaft area for PTO bushing

CRANKSHAFT MAG/PTO DIAMETER	
MINIMUM (new)	42.024 mm (1.6545 in)
MAXIMUM (new)	42.040 mm (1.6551 in)
SERVICE LIMIT	42.000 mm (1.6535 in)

CRANKSHAFT MAG RADIAL CLEARANCE	
SERVICE LIMIT	0.07 mm (.0028 in)

Installation

For installation, reverse the removal procedure. Pay attention to following details.

Use **NEW** bushings **no. 8**, when connecting rod big end diameter is out of specification.

Put bushings correctly in place and clean the split surface on both sides (cracked area) carefully.

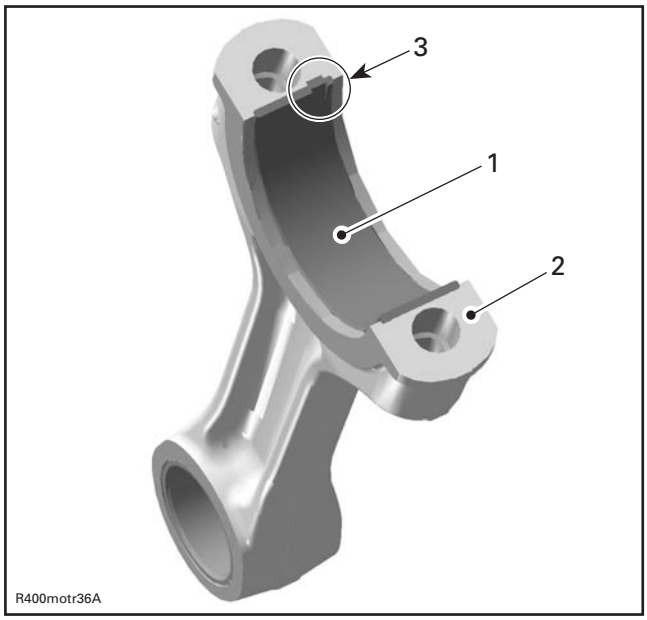

1. Half bushing of connecting rod big end
2. Split surface of the connecting rod
3. Nose of bushing in line with connecting rod groove

Torque **NEW** connecting rod screws **no. 7** as per following procedure:

– Install screws with half of recommended torque in the exploded view. Do not apply any thread locker product.
– Torque with the recommended values in the exploded view.
– Finish tightening the screws with an additional 70° turn using an angle torque wrench.

https://truckmanualshub.com/

CAUTION: Failure to strictly follow this procedure may cause screw to loosen and lead to engine damage. The bushing tapered end must be against the counterweight. Besides, as the "crankpin" screw has been stretched from the previous installation, it is very important to **use a new screw at assembly**.

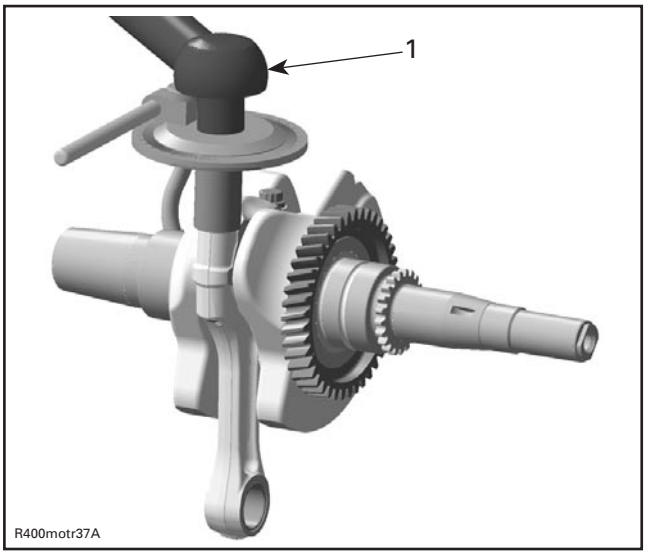

1. Angle torque wrench

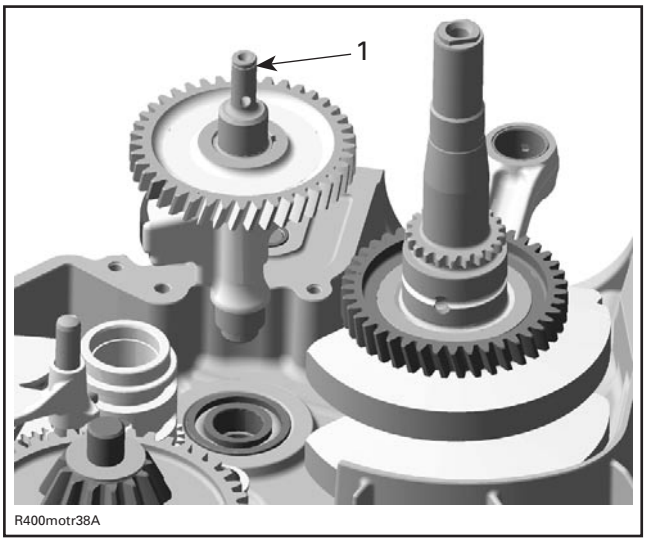

1. Insertion of balancer shaft

Align the marks of crankshaft and balancer shaft.

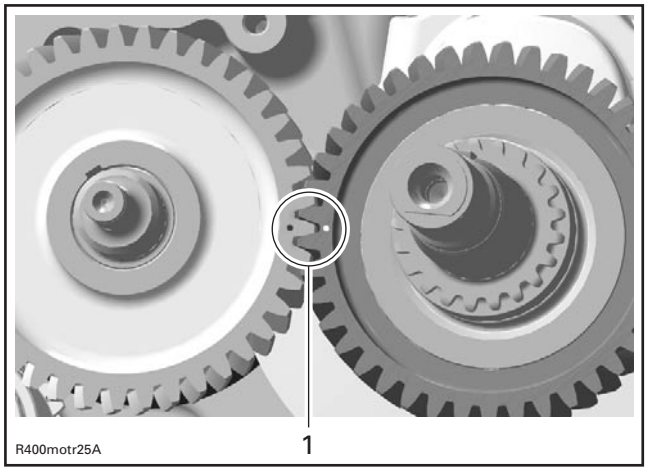

1. Punched marks located in the gears

After reinstalling of crankcase MAG, measure axial clearance of crankshaft with a feeler gauge on the PTO side between PTO crankcase and crankshaft thrust surface.

CAUTION: Install crankshaft locking bolt (P/N 529 035 617) right away to put crankshaft in TDC position before installing the camshaft and rockers (refer to CYLINDER AND HEAD).

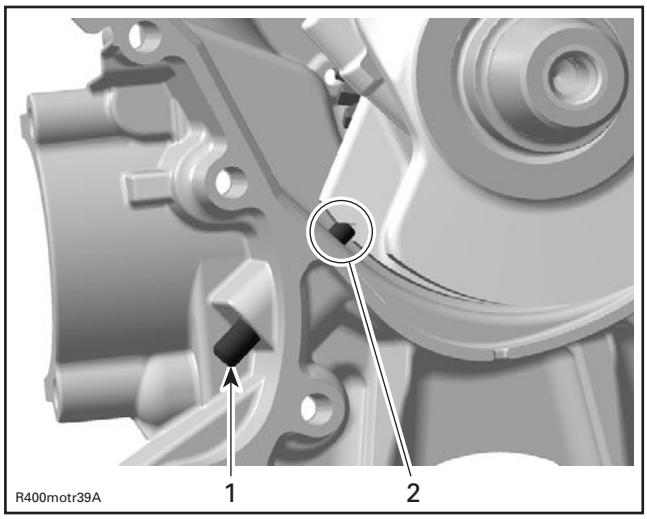

1. Crankshaft locking bolt (P/N 529 035 617)
2. Engagement groove for TDC position of the piston

NOTE: Always degrease tapers on both sides of the crankshaft before reinstalling rotor or CVT.

CAUTION: Make sure the woodruff key on crankshaft MAG is present and correctly in place.

https://truckmanualshub.com/

https://truckmanualshub.com/

GEARBOX

OUTPUT SHAFT AND TRANSMISSION

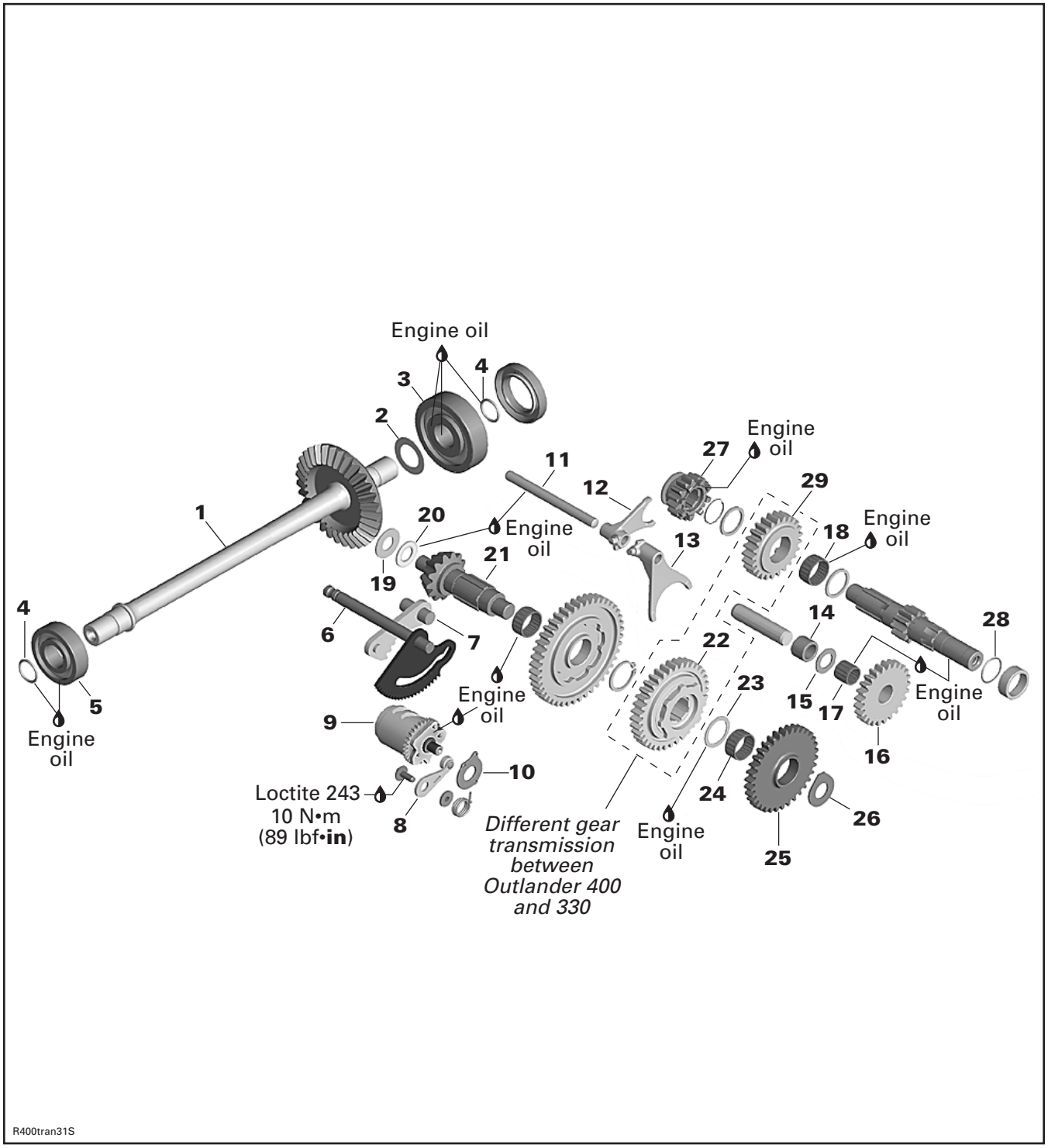

https://truckmanualshub.com/

CRANKCASE

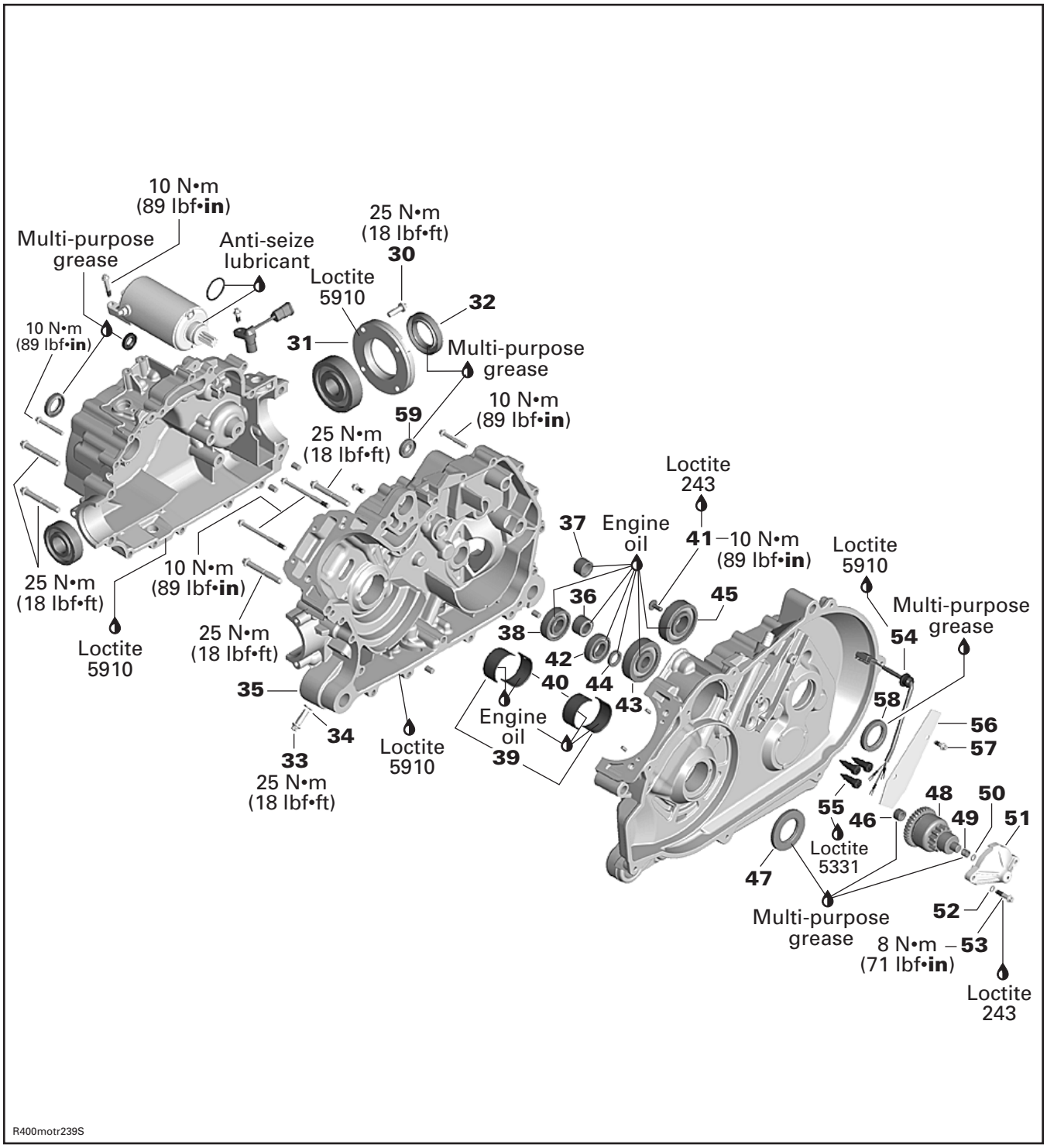

https://truckmanualshub.com/

GENERAL

To remove gearbox, the engine removal is necessary.

During assembly/installation, use the torque values and service products as in the exploded views.

Clean threads before applying a threadlocker. Refer to SELF-LOCKING FASTENERS and LOCTITE APPLICATION at the beginning of this manual for complete procedure.

⚠ WARNING

Torque wrench tightening specifications must strictly be adhered to.

Locking devices (ex.: locking tabs, elastic stop nuts, self-locking fasteners, etc.) must be installed or replaced with new ones where specified. If the efficiency of a locking device is impaired, it must be renewed.

To remove oil seals **no. 32**, **no. 47**, **no. 58** and **no. 59**, the engine removal/disassembly is NOT necessary (see OIL SEALS below).

OIL SEALS

Removal

NOTE: To remove oil seals **no. 47** and/or **no. 58,** it is necessary to remove drive and/or driven pulley (ies).

Remove oil seals **no. 32**, **no. 47**, **no. 58** and **no. 59** with a small flat screwdriver.

CAUTION: Avoid scoring crankshaft MAG end and/or shift shaft and/or main shaft during oil seal removal.

Inspection

Check bearings behind each oil seal for contamination and/or metal shavings.

Check oil seal running surface of main shaft, crankshaft MAG and shift shaft for grooves. Replace if necessary (see GEARBOX below).

Installation

The installation is the reverse of removal procedure.

Pay attention to the following details.

Use a suitable ring to push oil seals in place.

CAUTION: Oil seal must be installed with sealing lip toward engine.

Measure output shaft axial clearance prior to remove output shaft **no. 1**. This measure will indicate if bevel gear adjustment is necessary.

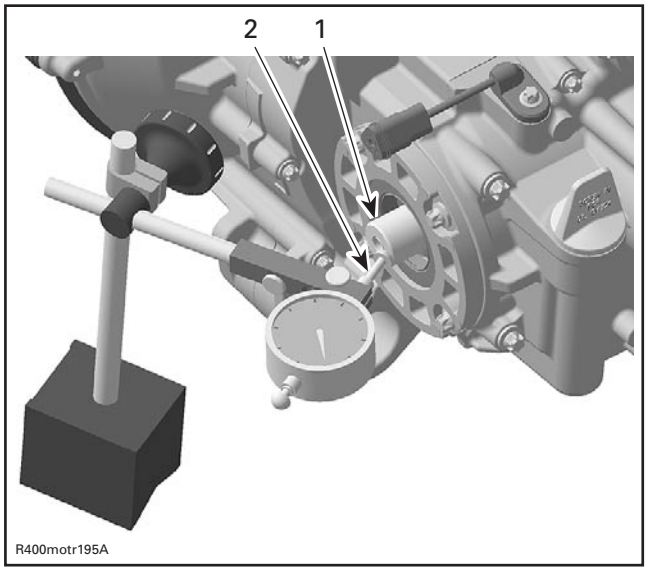

1. Output shaft
2. Dial indicator

OUTPUT SHAFT AXIAL CLEARANCE	
SERVICE LIMIT	0.30 mm (.012 in)

If the output shaft axial clearance is out of specification, perform the bevel gear adjustment procedure (see BEVEL GEAR ADJUSTMENT below).

OUTPUT SHAFT

Removal

Remove:

– disconnect unit bolts

NOTE: The oil seal **no. 32** is easily replaced without disassembly of the bearing cover **no. 31**. Use the output shaft oil seal installer (P/N 529 035 941) for installation of the oil seal.

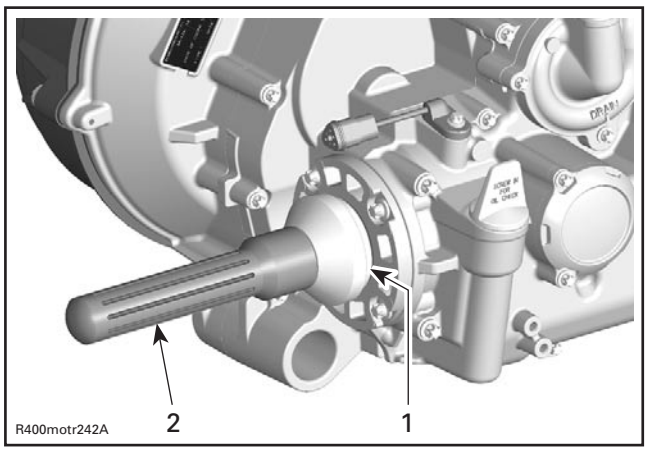

1. Output shaft oil seal installer
2. Insertion jig handle

https://truckmanualshub.com/

– bearing cover screws **no. 30**

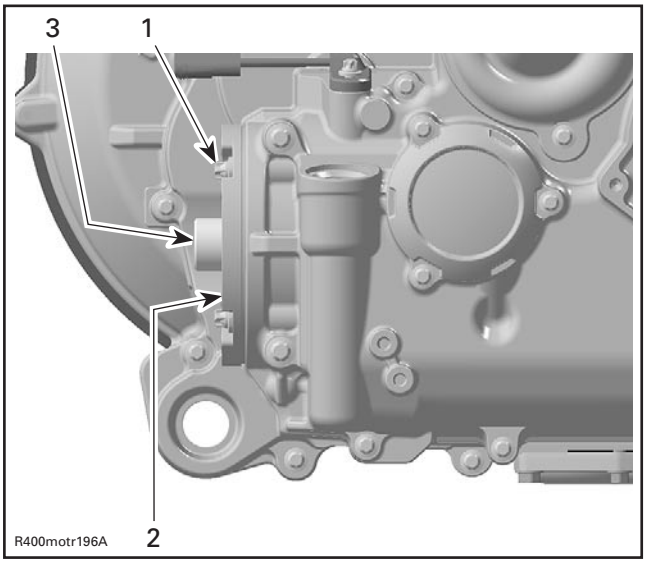

1. Remaining screw M8
2. Bearing cover
3. Output shaft spline

– bearing cover **no. 31** including oil seal **no. 32**

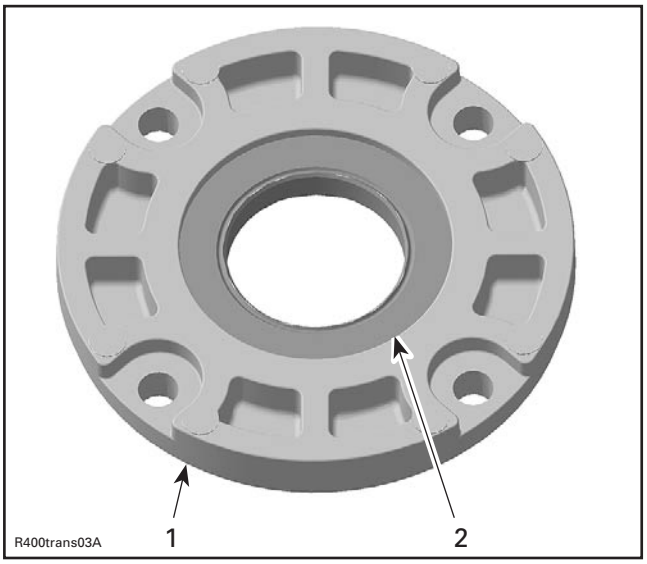

1. Bearing cover
2. Oil seal ring (apply Loctite 5910)

– magneto housing and rotor
(refer to MAGNETO SYSTEM)

– output shaft

CAUTION: Use a soft hammer to remove output shaft from crankcase MAG side.

– O-ring **no. 4** and bearing **no. 5**

NOTE: Both bearings on output shaft have a transition fit.

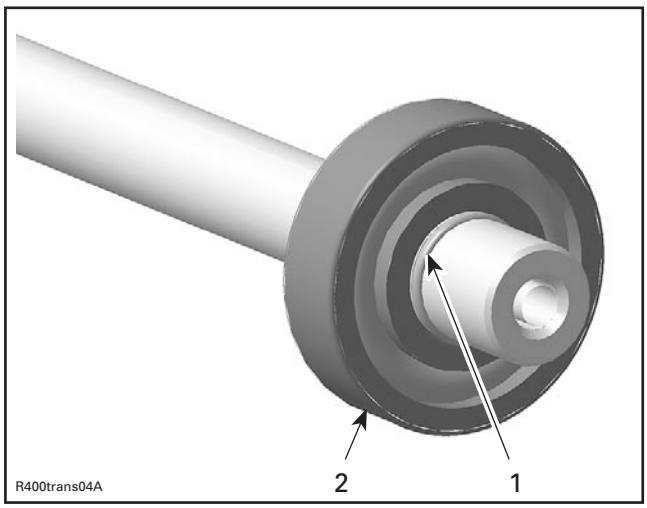

1. O-ring
2. Bearing with writing to the outside

– O-ring **no. 4** and bearing **no. 3**

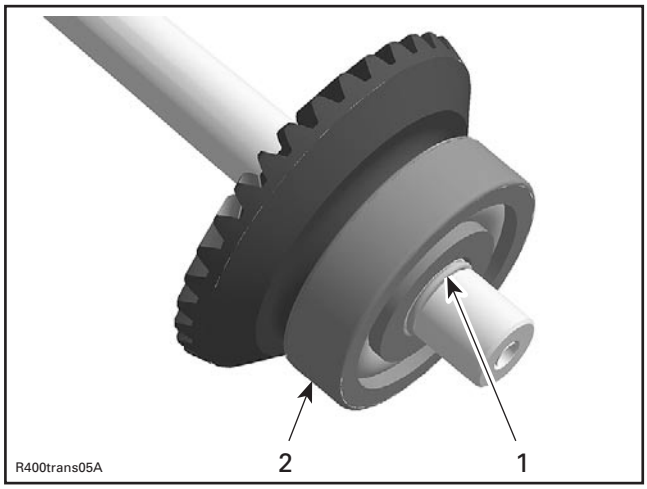

1. O-ring
2. Bearing with writing to the outside

– shim **no. 2**.

https://truckmanualshub.com/

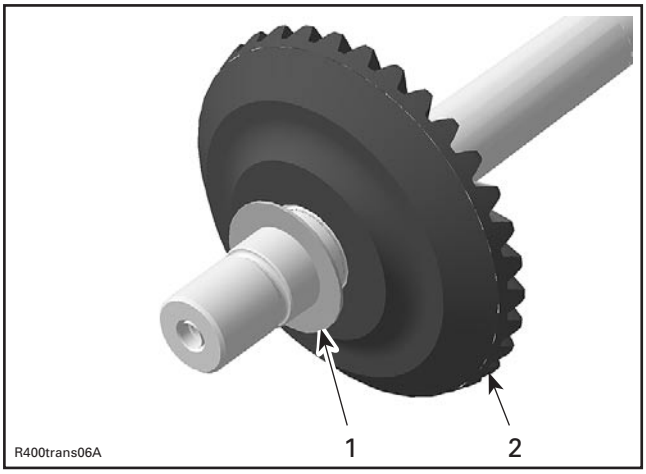

1. Shim
2. Output shaft gear

Inspection

Check output shaft for cracks and other visible damages.

CAUTION: Always replace output shaft no. 1 and bevel gear shaft no. 21 at the same time.

Check output shaft bearings for excessive play and smooth operation. Replace if necessary.

Replace oil seal **no. 32** if brittle, hard or damaged.

Replace O-rings **no. 4** if brittle, hard or damaged.

Clean crankcase split surface and especially the bearing areas from metal particles or other contamination.

Installation

For installation, reverse the removal procedure. Pay attention to following details.

Adjust axial play as per following procedure:

1. Use soft hammer to put bearing **no. 3** exactly in place against crankcase MAG side.

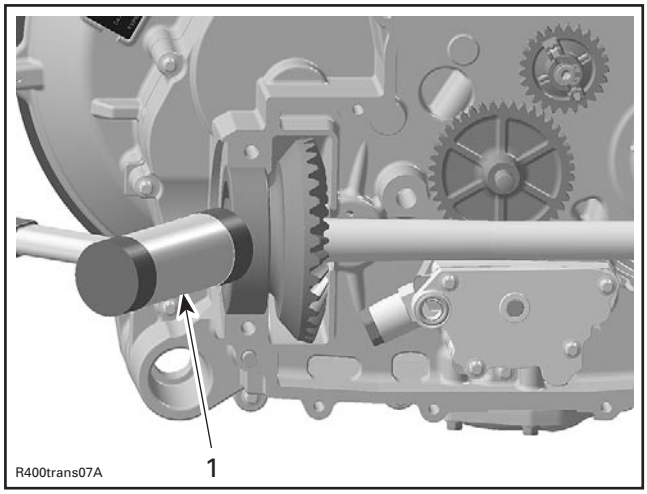

1. Soft hammer

2. Push output shaft as per following illustration.

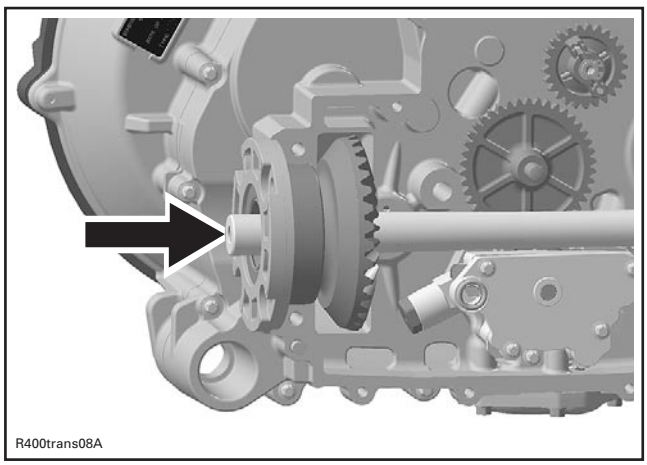

WAY TO PUSH THE BEVEL GEARS TOGETHER

3. Install bearing cover **no. 30** and measure axial gap between bearing and output shaft gear with a feeler gauge.

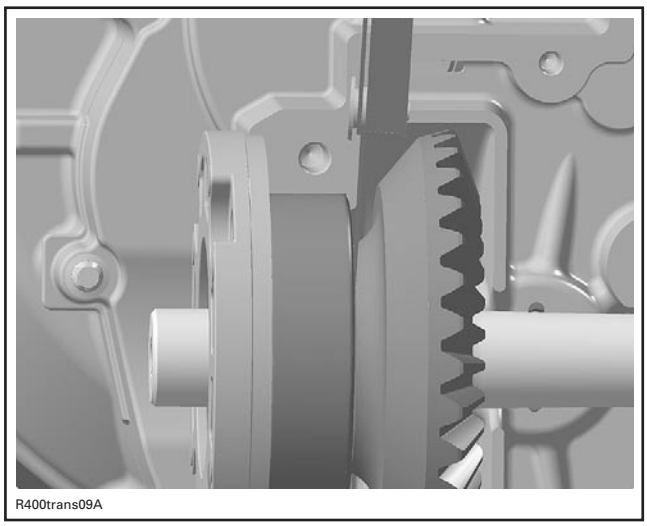

https://truckmanualshub.com/

4. Remove output shaft again and rebuild it with proper shim.
5. Take measured thickness and choose shim as per the following table.

MEASURED THICKNESS	SHIM THICKNESS
0.79 to 0.88 mm (.0311 to .0346 in)	0.70 mm (.0276 in)
0.89 to 0.98 mm (.0350 to .0386 in)	0.80 mm (.0315 in)
0.99 to 1.08 mm (.0390 to .0425 in)	0.90 mm (.0354 in)
1.09 to 1.18mm (.0429 to .0465 in)	1.00 mm (.0394 in)
1.19 to 1.28 mm (.0469 to .0504 in)	1.10 mm (.0433 in)
1.29 to 1.38 mm (.0508 to .0543 in)	1.20 mm (.0472 in)
1.39 to 1.48 mm (.0547 to .0583 in)	1.30 mm (.0512 in)
1.49 to 1.58 mm (.0587 to .0622 in)	1.40 mm (.0511 in)

6. Finish with ball bearing cover **no. 31**.

CRANKCASE

Disassembly

Remove:

– engine from vehicle
(refer to REMOVAL AND INSTALLATION)
– magneto housing cover and rotor
– output shaft.

Measure the axial clearance of bevel gear with a feeler gauge.

NOTE: Bevel gear axial clearance should be measured before crankcase housings separation.

BEVEL GEAR AXIAL CLEARANCE	
SERVICE LIMIT	0.15 mm (.059 in)

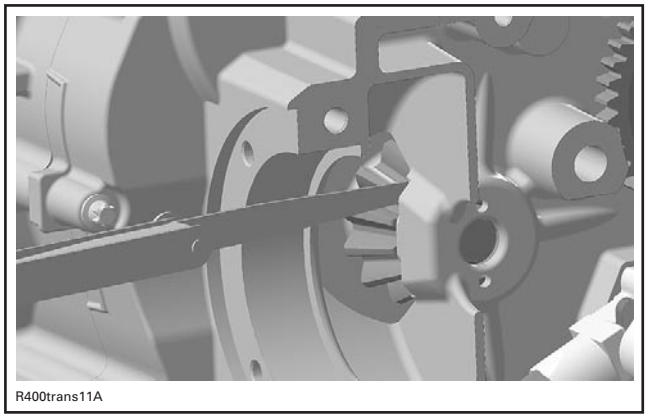

MEASURE AXIAL CLEARANCE OF BEVEL GEAR

Remove:

– cylinder head and cylinder
– timing chain
– drive and intermediate gear of water and oil pump

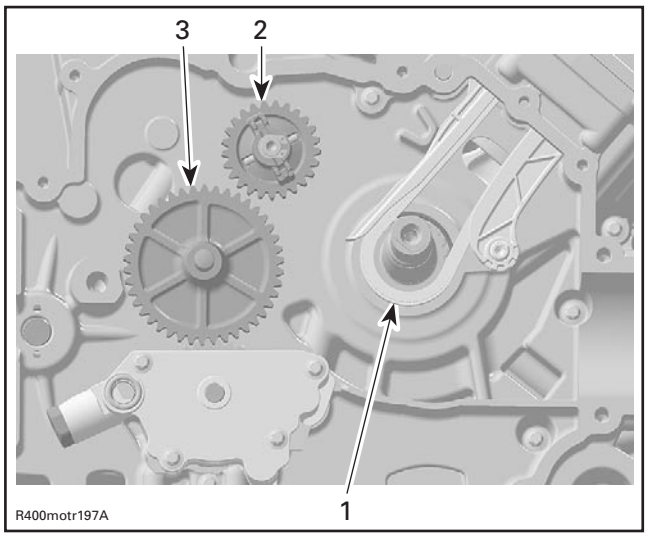

1. *Timing chain*
2. *Intermediate gear*
3. *Drive gear*

https://truckmanualshub.com/

– screws retaining crankcase housing.

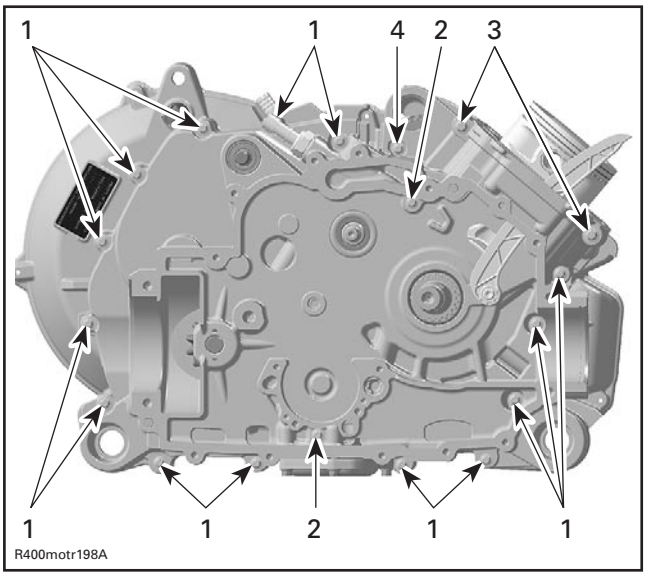

1. 14 screws M6 x 45
2. 2 screws M6 x 85
3. 2 screws M8 x 65
4. 1 screw M6 x 16

Place the crankcase housings on a wood stand, MAG side upwards.

Lift crankcase housing **no. 35** with 2 screwdrivers.

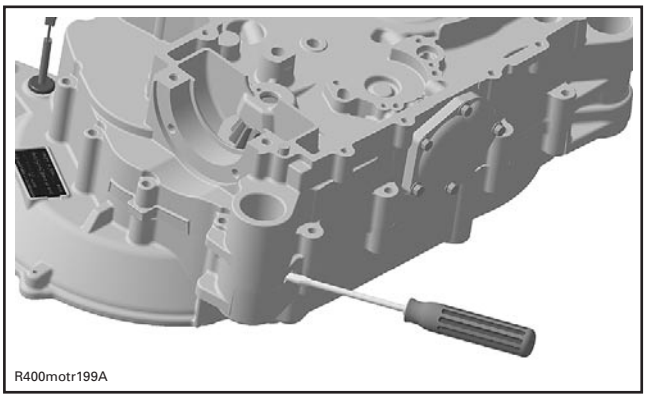

POSITION FOR BIG FLAT SCREWDRIVER

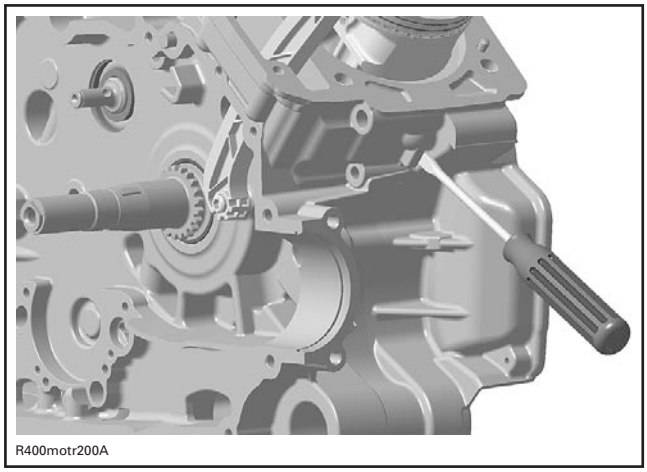

POSITION FOR BIG FLAT SCREWDRIVER

Inspection

NOTE: To check some parts, it is recommended to remove all components in both crankcase halves.

Clean crankcase from contaminations and blow the oil supply lines with compressed air.

⚠ WARNING

Use safety goggles to avoid injury to your eyes.

Check bearings **nos. 38**, **no. 42**, **no. 43** and **no. 45** as well as needle bearings **no. 36** and **no. 37** for excessive play and smooth operation. Replace if necessary.

Check plain bearings **no. 39** and **no. 40** for scorings or other damages.

Measure plain bearing inside diameter. Replace if the measurement is out of specification (refer to CRANKSHAFT/BALANCER SHAFT, see CRANKCASE).

Bearing Removal Procedure

⚠ WARNING

Clean oil, outside and inside, from housing.

CAUTION: Make sure to support crankcase housings properly when ball bearings, needle bearings or plain bearings are removed; otherwise, crankcase housings could be damaged.

https://truckmanualshub.com/

To remove bevel gear needle bearing **no. 36** and main shaft needle bearing **no. 37**, use a punch.

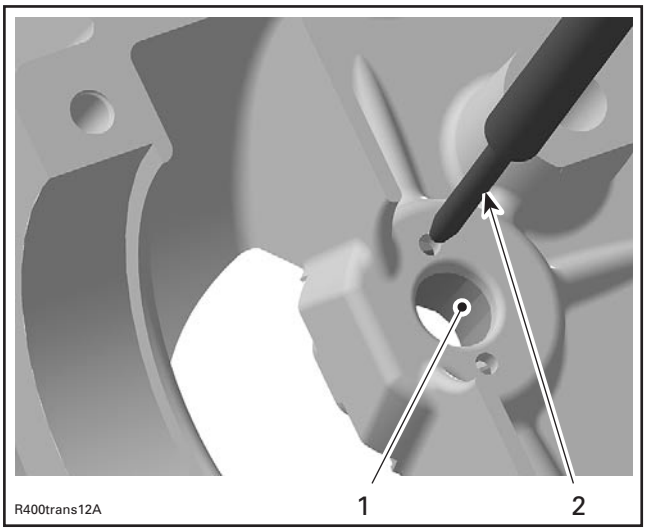

1. *Bevel gear needle bearing*
2. *Punch*

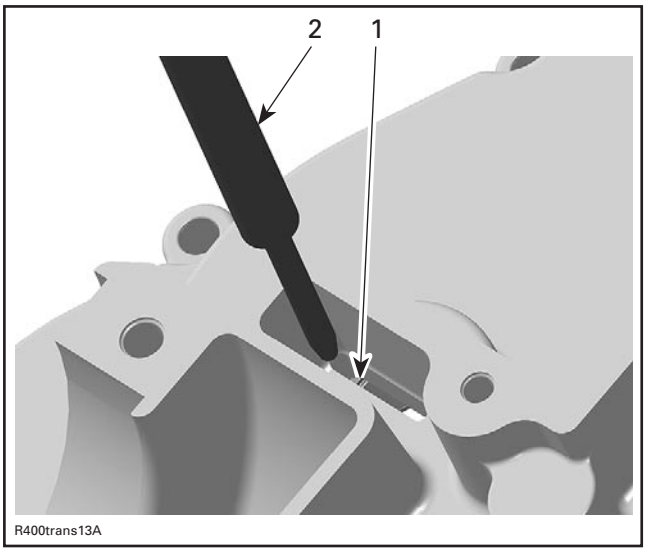

1. *Main shaft needle bearing location*
2. *Punch*

Remove plain bearings **no. 39** and **no. 40** with the proper plain bearing remover (refer to CRANKSHAFT/ BALANCER SHAFT).

To remove ball bearings **no. 42** and **no. 43**, use a blind hole bearing puller.

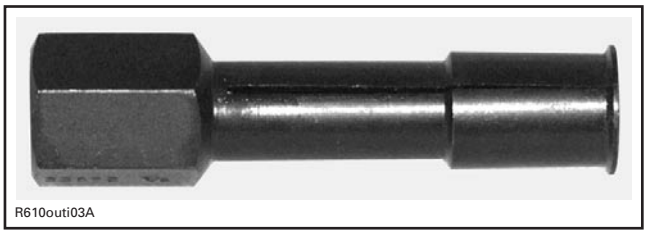

Ball bearings **no. 38** and **no. 45** can be easily removed with a suitable pusher from outside in.

The oil seals **no. 46**, **no. 49**, **no. 60** and **no. 61** are removed easily with a flat screwdriver.

NOTE: To remove oil seals **no. 34**, **no. 49**, **no. 60** and **no. 61,** the engine removal/disassembly is NOT necessary (see OIL SEAL PROCEDURE above).

For ball bearing **no. 47**, remove screw **no. 43** then push bearing from outside in with a punch.

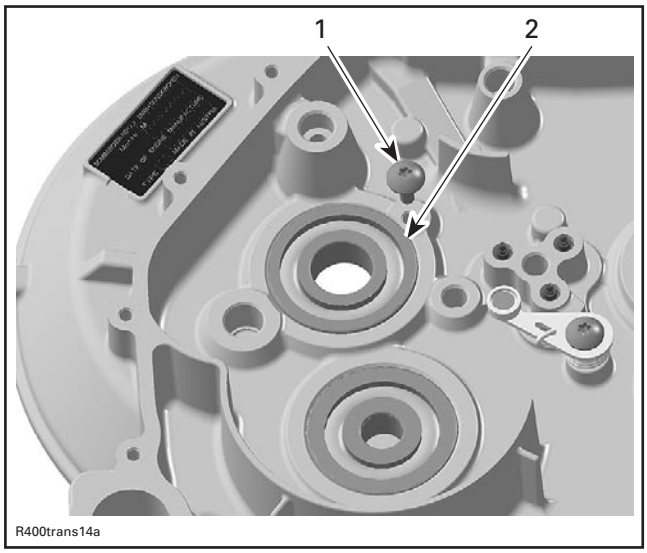

1. *Screw M6*
2. *Main ball bearing PTO side*

Use needle bearing remover (P/N 529 035 756) to remove needle bearing **no. 48**.

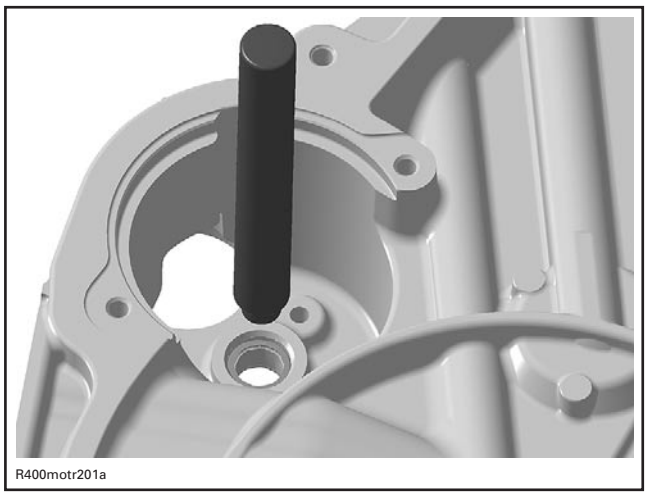

https://truckmanualshub.com/

Bearing Installation Procedure

Unless otherwise instructed, never use hammer to install ball bearings, needle bearings or plain bearings. Use press machine only.

⚠ WARNING

Clean oil, outside and inside, from housing.

Install plain bearings **no. 40** and **no. 41** with the proper plain bearing installer (refer to CRANKSHAFT/ BALANCER SHAFT).

NOTE: Place crankcase housings on a wood stand, MAG side upwards before installing needle bearings **no. 38** and **no. 39**.

NEEDLE BEARING INSTALLER	
Main shaft bearing	529 035 762
Bevel gear bearing	529 035 763
Starter drive bearing	529 035 943

Install needle bearing **no. 37** with the needle bearing installer (P/N 529 035 762) and insertion jig handle (P/N 420 877 650).

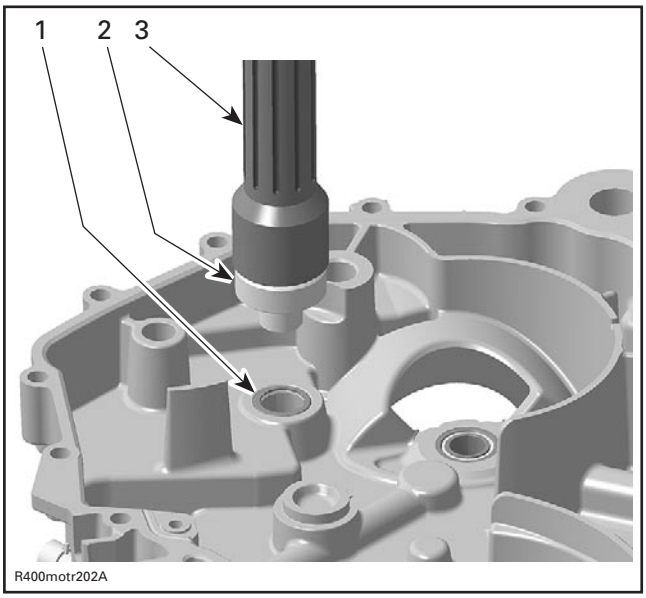

1. *Main shaft needle bearing*
2. *Needle bearing installer*
3. *Insertion jig handle*

Install needle bearing **no. 36** using needle bearing installer (P/N 529 035 763) and insertion jig handle (P/N 420 877 650).

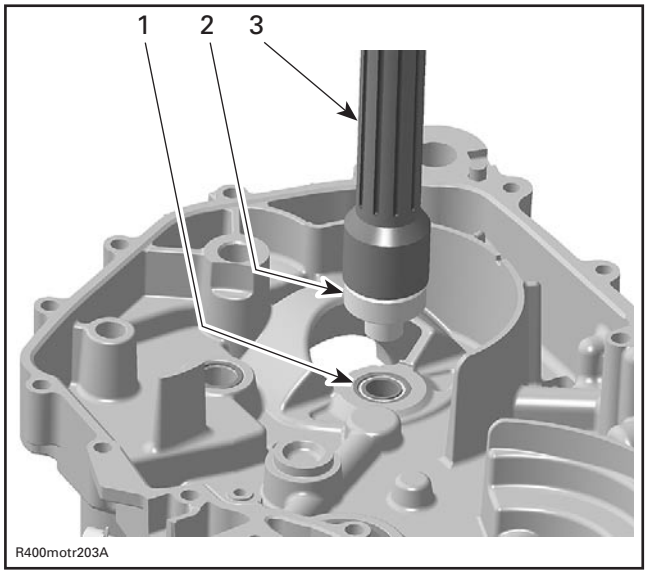

1. *Bevel gear needle bearing*
2. *Needle bearing installer*
3. *Insertion jig handle*

Install needle bearing **no. 46** using needle bearing installer (P/N 529 035 934) and insertion jig handle (P/N 420 877 650).

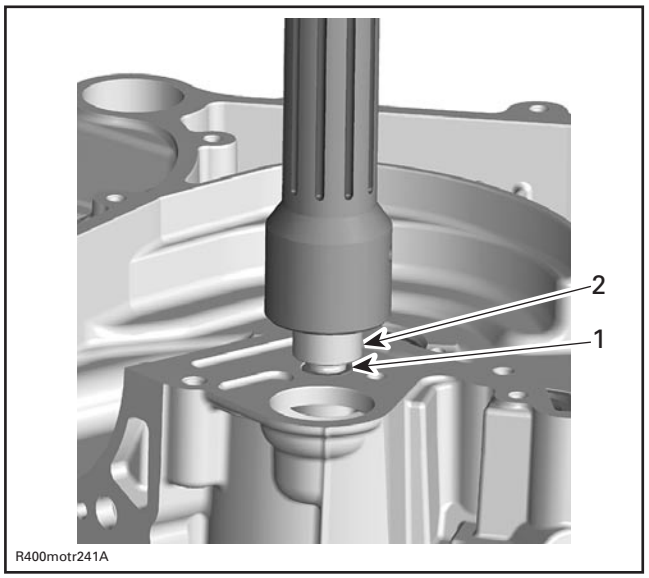

1. *Starter drive needle bearing PTO side*
2. *Needle bearing installer*

CAUTION: Ball bearings have to be installed with closed bearing cage to the engine outside.

Use a suitable installer for installing ball bearings **no. 38**, **no. 42**, **no. 43** and **no. 45**.

https://truckmanualshub.com/

Install new oil seals with the proper installer.

OIL SEAL INSTALLER	
Crankshaft oil seal	529 035 760
Balancer shaft oil seal	529 035 933
Main shaft oil seal	529 035 934

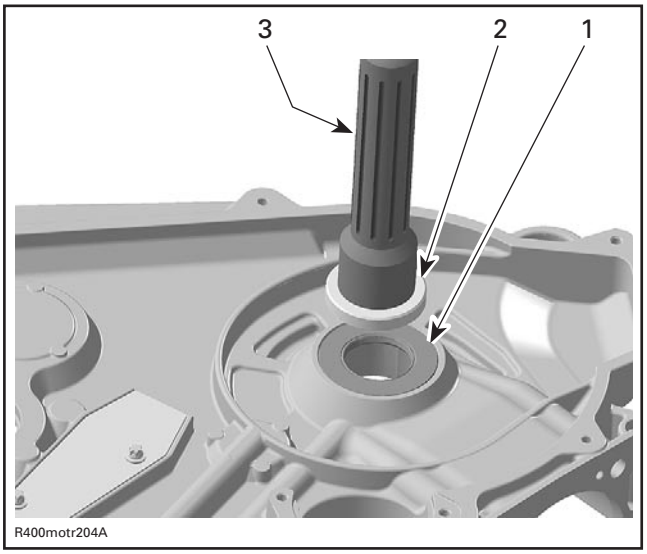

1. *Crankcase oil seal PTO side*
2. *Oil seal installer*
3. *Insertion jig handle*

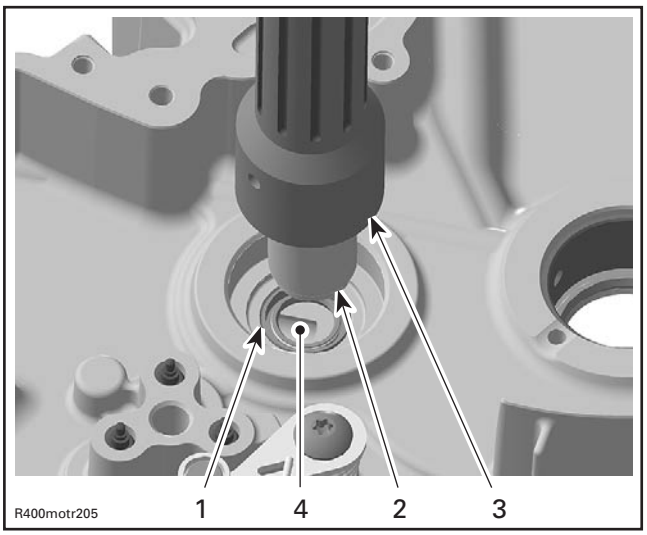

1. *Balancer shaft oil seal PTO side*
2. *Oil seal installer*
3. *Insertion jig handle*
4. *Bore for engine blow-by*

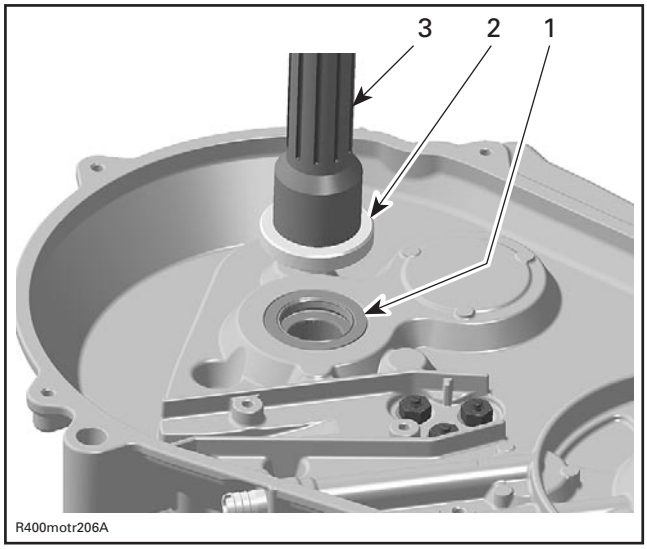

1. *Main shaft oil seal PTO side*
2. *Oil seal installer*
3. *Insertion jig handle*

Assembly

The assembly of crankcase is essentially the reverse of removal procedure. However, pay attention to the following details.

Clean oil passages and make sure they are not clogged.

Clean all metal components in a solvent.

Crankcase mating surfaces are best cleaned using a combination of the chisel gasket remover (P/N 413 708 500) and a brass brush. Brush a first pass in one direction then make the final brushing perpendicularly (90°) to the first pass cross (hatch).

CAUTION: Do not wipe with rags. Use a new clean hand towel only.

IMPORTANT: When beginning the application of the crankcase sealant, the assembly and the first torquing should be done within 10 minutes. It is suggested to have all you need on hand to save time.

NOTE: It is recommended to apply this specific sealant as described here to get a uniform application without lumps. If you do not use the roller method, you may use your finger to uniformly distribute the sealant (unlike the Drei Bond sealing compound, using a finger will not affect the adhesion).

Use the silicone-based Loctite 5910 (P/N 293 800 081) on mating surfaces.

NOTE: The sealant curing time is similar to the Loctite 518 without using the Primer N.

https://truckmanualshub.com/

CAUTION: Do not use Loctite 515 or 518 to seal crankcase. Do not use Loctite Primer N with the Loctite 5910. Using these products or non silicone-based sealant over a previously sealed crankcase with Loctite 5910 will lead to poor adhesion and possibly a leaking crankcase. These products are chemically incompatible. Even after cleaning, the Loctite 5910 would leave incompatible microscopic particles.

Use a plexiglas plate and apply some sealant on it. Use a soft rubber roller (50 - 75 mm (2 - 3 in)) (available in arts products suppliers for printmaking) and roll the sealant to get a thin uniform coat on the plate (spread as necessary). When ready, apply the sealant on crankcase mating surfaces.

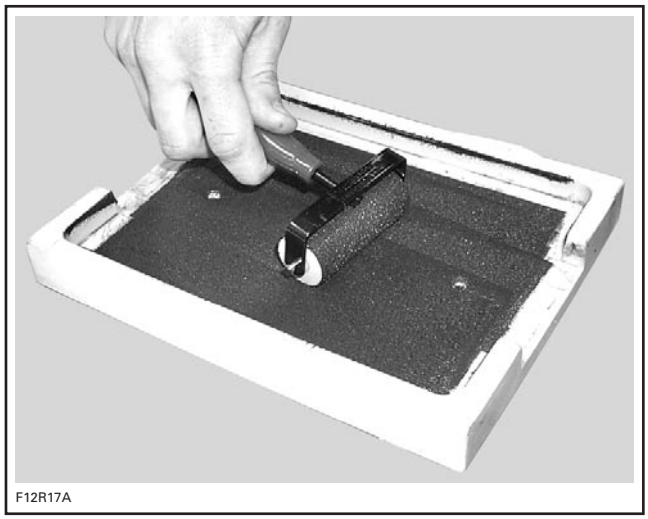
F12R17A

Do not apply in excess as it will spread out inside crankcase.

NOTE: Do not use Loctite Primer N with this sealant. The sealant curing time is similar to the Loctite 518 without using the Primer N, which is 4 to 24 hours.

CAUTION: Do not forget to place O-ring **no. 28** including distance sleeve. Chamfered bore of distance sleeve has to face the engine.

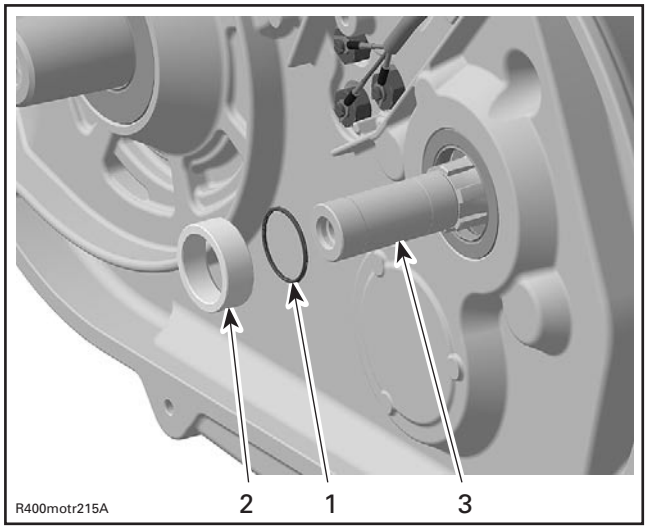

R400motr215A

1. *O-ring*
2. *Distance sleeve*
3. *Main shaft end PTO side*

Torque crankcase screws by hand as per following sequence. Repeat procedure, retightening all screws to 10 N•m (89 lbf•**in**).

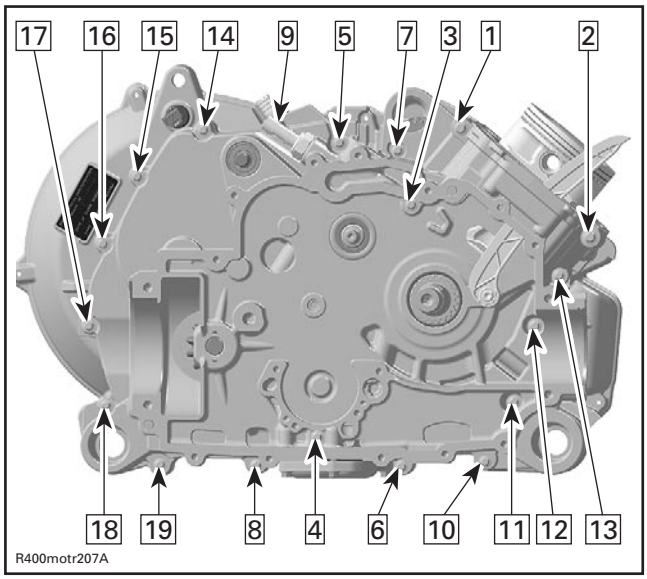

R400motr207A

https://truckmanualshub.com/

GEARBOX

General

The only difference between gearbox of the Outlander 400 to 330 is the transmission ratio of gears **no. 22** and **no. 29** (high range gear).

During and after gearbox disassembly, inspect the condition of each part closely. In particular, check for:

- gear teeth damage
- worn or scoured bearing surfaces
- worn or scoured shift fork
- worn or scoured shift fork shaft
- rounded engagement dogs and slots
- bent shift forks
- bent shift fork shaft
- worn shift fork engagement pins
- worn tracks on shift drum
- worn shift fork engagement groove
- worn splines on shafts and gears.

Removal

Remove output shaft.

Separate crankcase.

Remove:

- balancer shaft
- parking lever **no. 7**
- shift shaft **no. 6**

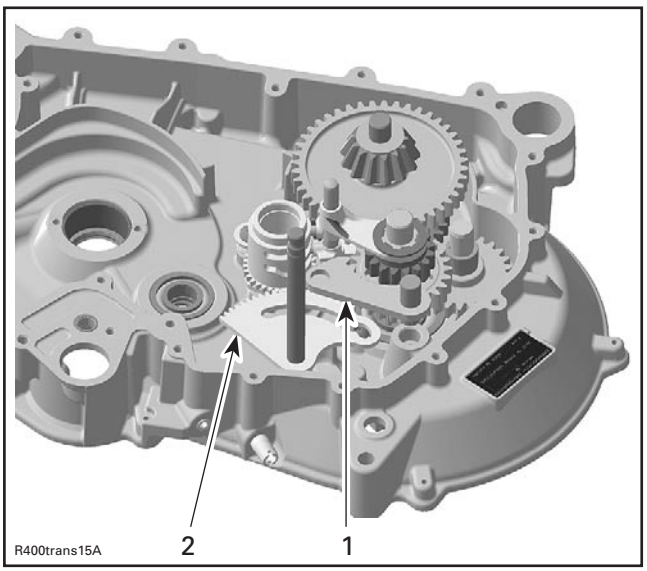

1. *Parking lever*
2. *Shift shaft*

- shift fork shaft **no. 11**

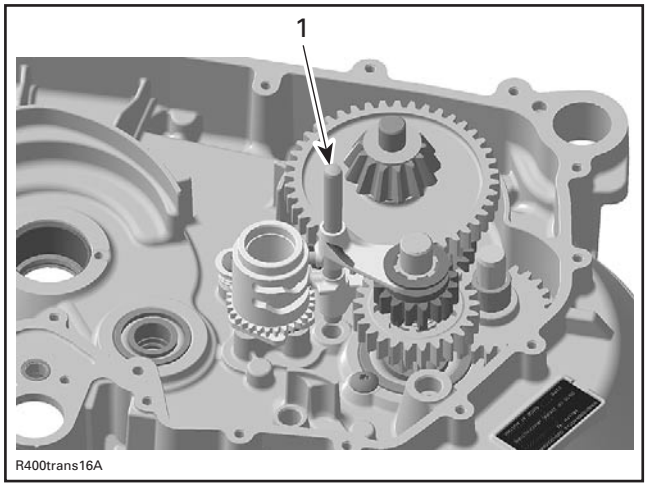

1. *Shift fork shaft*

- shift fork **no. 12**.

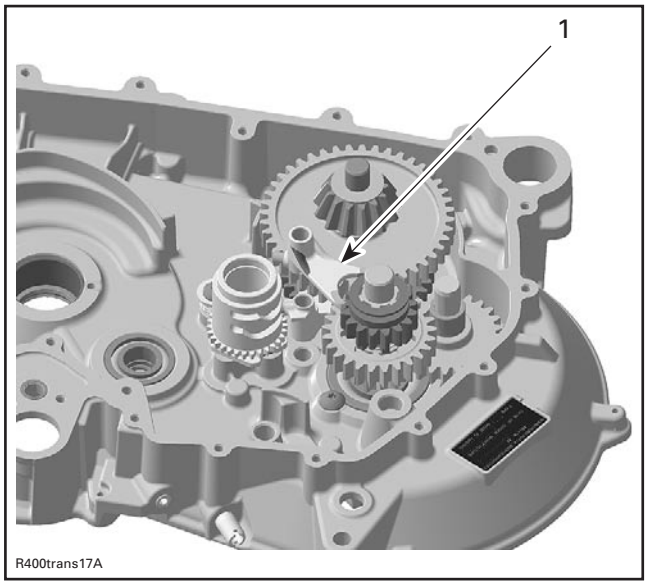

1. *Shift fork (engaged in main shaft gear)*

Disengage shift fork **no. 13** from shift drum **no. 9**.

https://truckmanualshub.com/

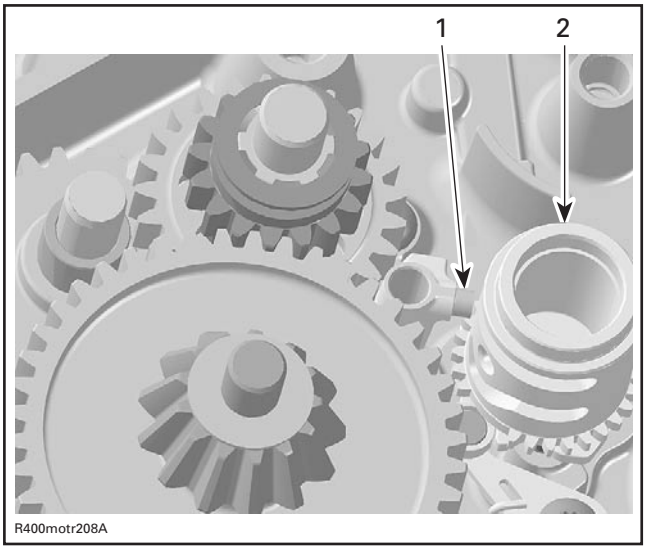

1. Shift fork engagement pin
2. Shift drum

Insert a flat screwdriver in the slot of index lever **no. 8**. Turn screwdriver counterclockwise and remove shift drum.

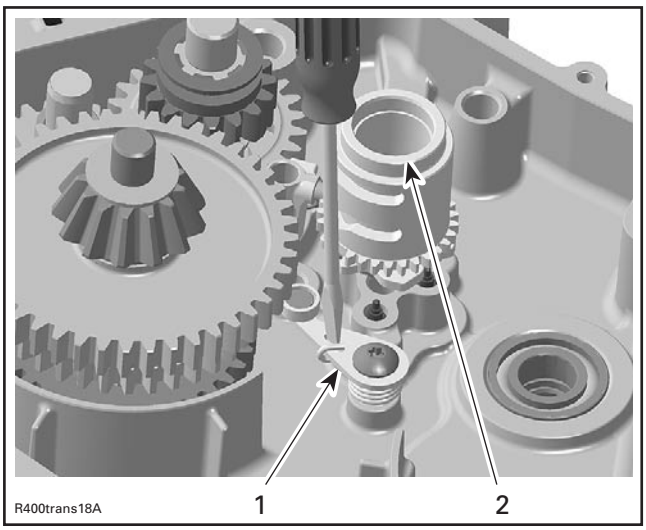

1. Index lever
2. Shift drum

Remove:

- shift fork **no. 13**
- bevel gear shaft **no. 21** with low range gear assembly
- main gear **no. 27**
- O-ring **no. 28** including distance sleeve from main shaft on engine PTO side
- main shaft with high range gear assembly
- gear selection **no. 22**, thrust washer **no. 23**, reverse gear **no. 25**, needle bearing **no. 24** and shim **no. 26**
- distance sleeve **no. 14**, thrust washer **no. 15**, intermediate gear **no. 16**, needle bearing **no. 17** and intermediate gear shaft **no. 18**.

NOTE: It is not necessary to remove index lever **no. 8**. Check index lever for visible damage and if it moves freely. Replace if necessary.

Inspection

Check both shift forks for visible damage, wear or bent shift fork claws.

Measure the shift fork claw thickness.

SHIFT FORK CLAW THICKNESS	
MINIMUM (new)	4.800 mm (.189 in)
MAXIMUM (new)	4.900 mm (.193 in)
SERVICE LIMIT	4.750 mm (.187 in)

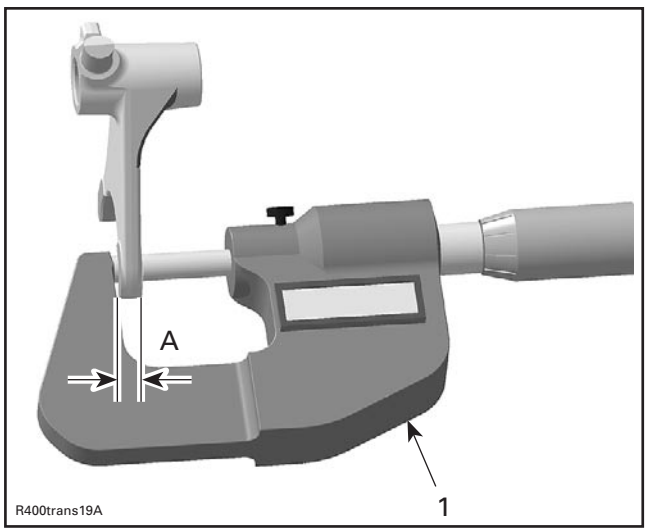

1. Micrometer
A. Shift fork claw thickness

Check shift drum tracks for scoring or heavy wear like rounded engagement slots.

Check index washer on shift drum for scoring or visible damages.

https://truckmanualshub.com/

Replace isolating washer **no. 10** if there are signs of wear or visible damages.

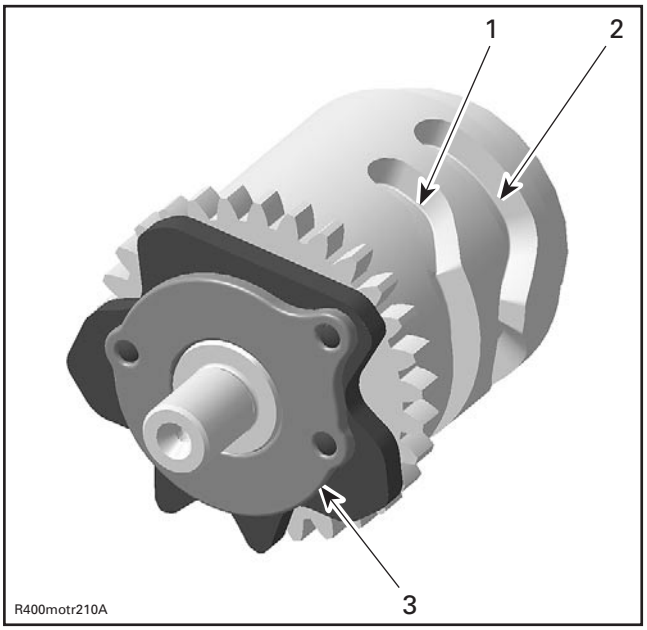

1. Track for the low/reverse gear shift fork
2. Track for the high gear shift fork
3. Isolating washer on the shift drum

Check shift shaft **no. 6** for worn splines and gears.

Parking lever **no. 7** for cracks or other damages.

Index lever with roller **no. 8** must have free movement.

Measure the gap of shift fork engagement groove.

NOTE: Both gears **no. 22** and **no. 27** have same gap width and same service limit.

GAP OF SHIFT FORK ENGAGEMENT GROOVE	
MINIMUM (new)	5.00 mm (.197 in)
MAXIMUM (new)	5.10 mm (.201 in)
SERVICE LIMIT	5.20 mm (.205 in)

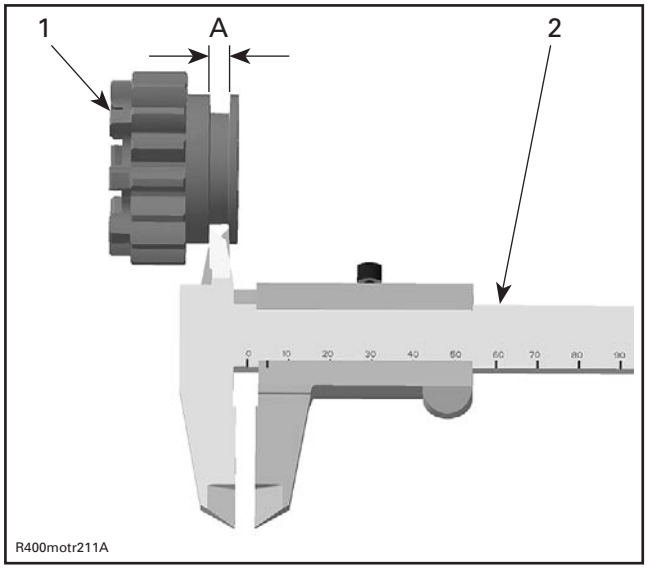

1. Main gear
2. Caliper
A. Gap for engagement of shift fork

Check main shaft for wear.

MAINSHAFT	
SERVICE LIMIT	
MAG SIDE	17.990 mm (.708 in)
PTO SIDE	24.950 mm (.982 in)

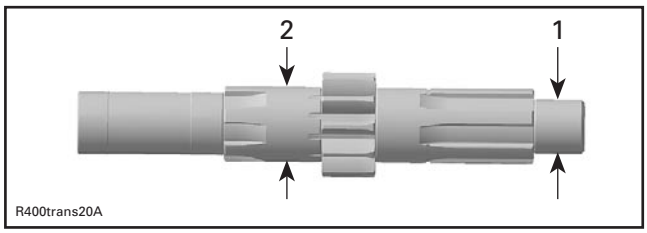

1. Mag side
2. PTO side

Check bevel gear shaft.

BEVEL GEAR SHAFT	
SERVICE LIMIT	
PTO SIDE	24.990 mm (.984 in)

https://truckmanualshub.com/

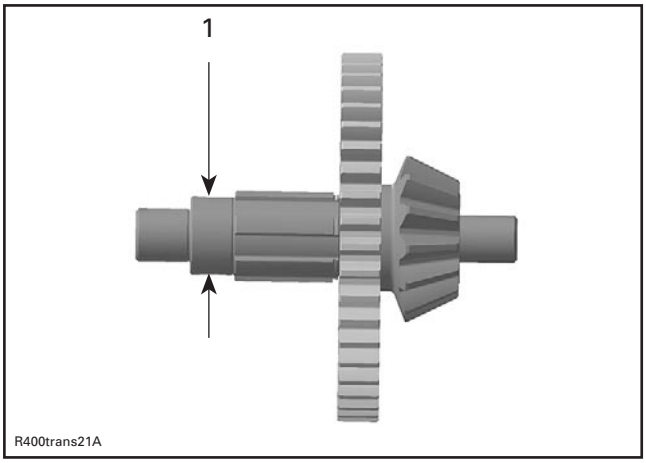

1. PTO side

Check all bearings, bearing points, tooth flanks, taper grooves and annular grooves. Annular grooves must have sharp edges.

Replace gears only together with the corresponding meshing gears.

NOTE: Always replace circlips and use special pliers to install them.

Check all shims for wear. Always replace shim by a new one with the same thickness, when reassembling the gearbox with existing output shaft **no. 1** and bevel gear shaft **no. 21**.

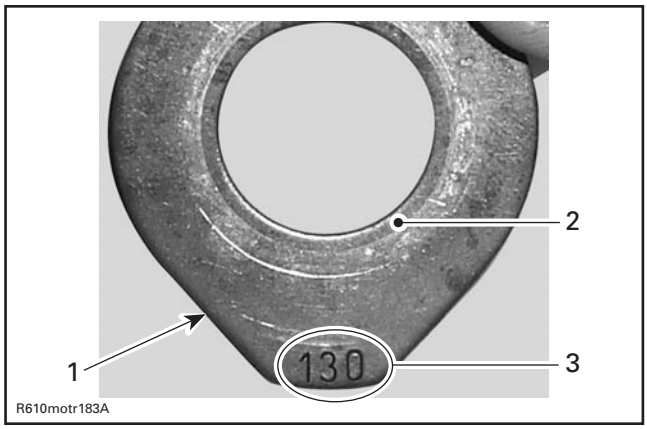

1. Thrust washer for adjusting the bevel gear crankcase on CVT side
2. Area where wear signs appear
3. Adjustment thickness of the washer

Installation

For installation, reverse the removal procedure. Pay attention to the following details.

NOTE: Run all gears before installing the crankcase MAG.

Install:

- intermediate gear shaft **no. 18**, needle bearing **no. 17**, intermediate gear **no. 16**, thrust washer **no. 15** and distance sleeve **no. 14**
- shim **no. 26**, needle bearing **no. 24**, reverse gear **no. 25**, thrust washer **no. 23** and gear selection **no. 22**
- main shaft with high range gear assembly
- O-ring **no. 28** including distance sleeve on main shaft end PTO side

CAUTION: Place O-ring no. 28 including distance sleeve right away. Chamfered bore of distance sleeve has to face the engine.

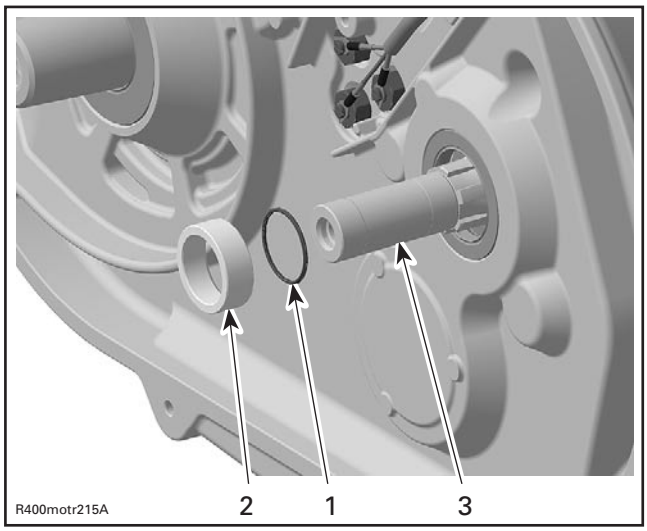

1. O-ring
2. Distance sleeve
3. Main shaft end PTO side

- main gear **no. 27**
- bevel gear shaft **no. 21** with low range gear assembly

NOTE: If a new bevel gear assembly **no. 1** and **no. 21** is used, it is necessary to make the shim adjustment. See below. If the existing bevel gear is used, it is mandatory to use new shims **no. 19**, **no. 26** with same thickness and also new axial needle bearing **no. 20**

- shift forks **no. 13** and **no. 12**.

Put shift forks in place and afterward insert pin **no. 11** with the chamfer on top for a better installation of crankcase MAG side.

https://truckmanualshub.com/

Insert a flat screwdriver in the slot of index lever **no. 8**. Turn screwdriver counterclockwise and install shift drum on park position as per the following illustration.

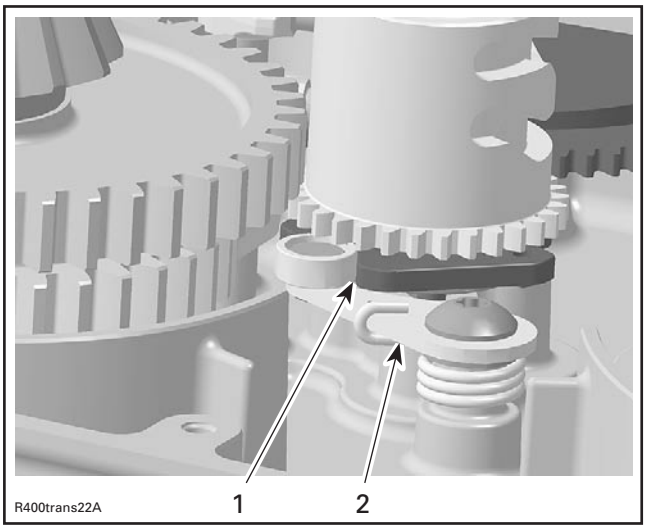

1. Park position (flat area on index washer)
2. Index lever

Insert shift shaft **no. 6** with mark in line to first tooth on shift drum.

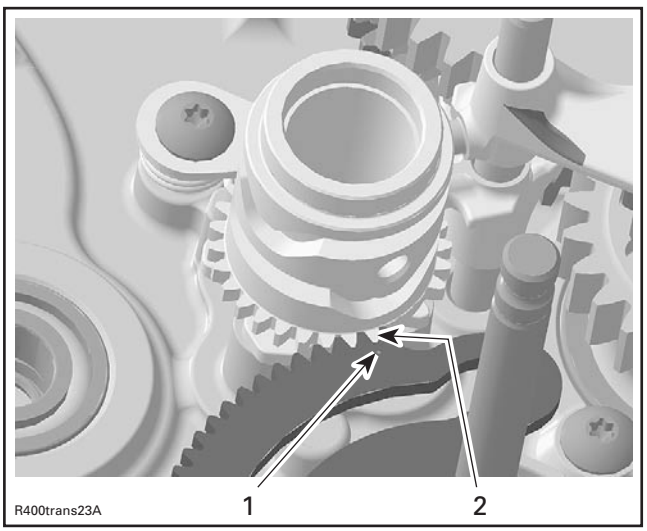

1. Mark on shift shaft
2. First tooth on shift drum

Install parking lever **no. 7**.

Bevel Gear Adjustment

Use following course of calculation to adjust bevel gear in place between crankcase PTO and MAG.

NOTE: Only necessary if the output shaft axial clearance of the bevel gear is out of specification.

Measure following items and enter measurement in the following list:

LETTER	MEASUREMENT 1	MEASUREMENT 2
A	2 mm (.0787 in)	2 mm (.0787 in)
B		
C		
D		
E		
F		
G		
H		
I		
J		

https://truckmanualshub.com/

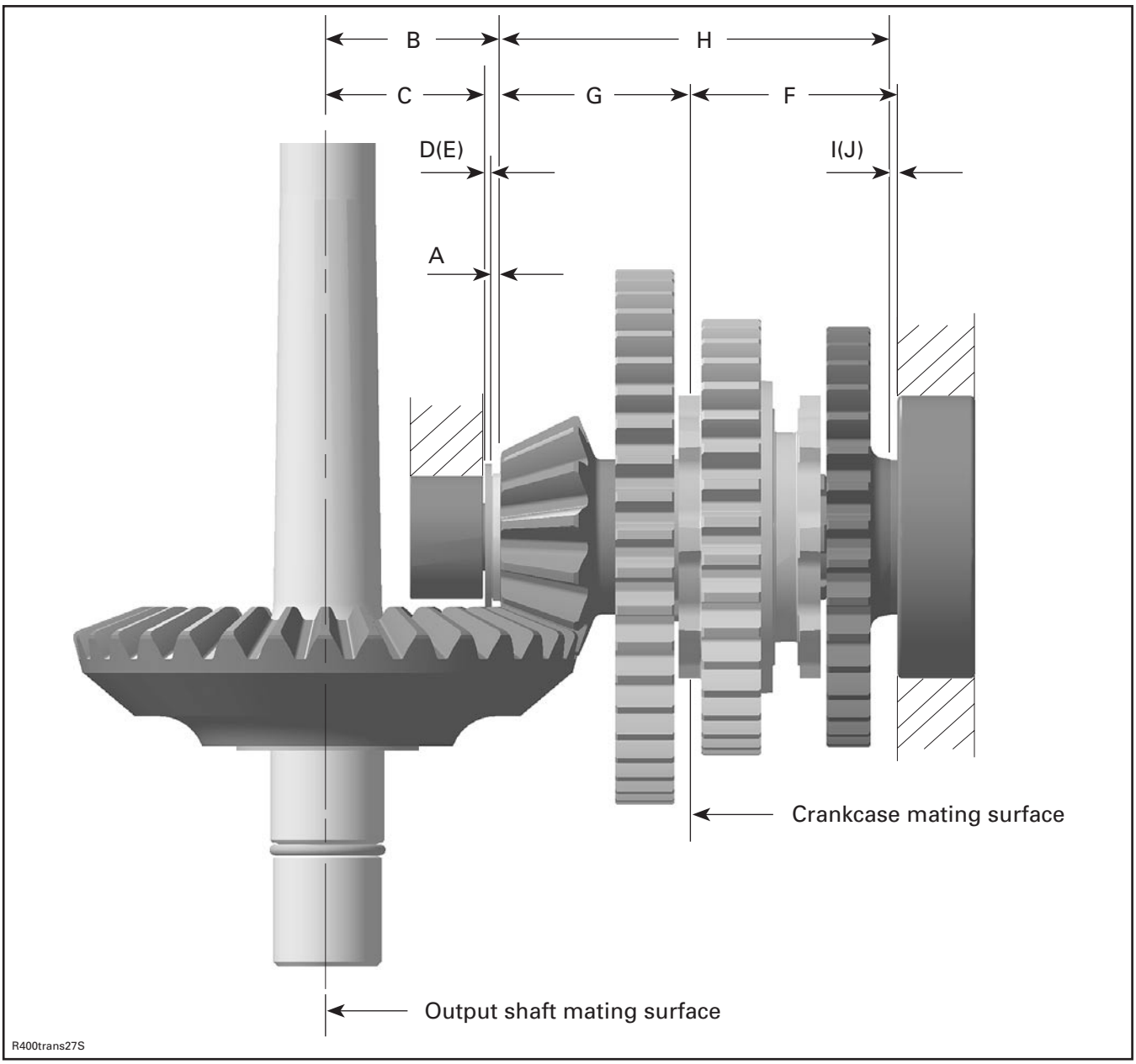

https://truckmanualshub.com/

Measure shim on MAG side:

NOTE: Clean mating surface of crankcase before measurement. Refer to crankcase assembly procedure.

- A = 2 mm (.0787 in) nominal thickness of axial needle bearing **no. 20**.
- B = Distance between butting face and theoretical center of bevel gear taper. K is defined by manufacturer and written on surface of bevel gear PTO end.

Use following course of calculation to find out value B.

B = (K/100) + 37.8

NOTE: Value K is a number between - 10 and + 10 and equals the (±) deviation to the nominal value of 37.8 mm (1.488 in) in hundreth of a millimeter.

For example, number K = - 3 equals - 0.03 mm (- 0.0012 in) to the nominal value of 37.8 mm.

B = (-3/100) + 37.8 = 37.77

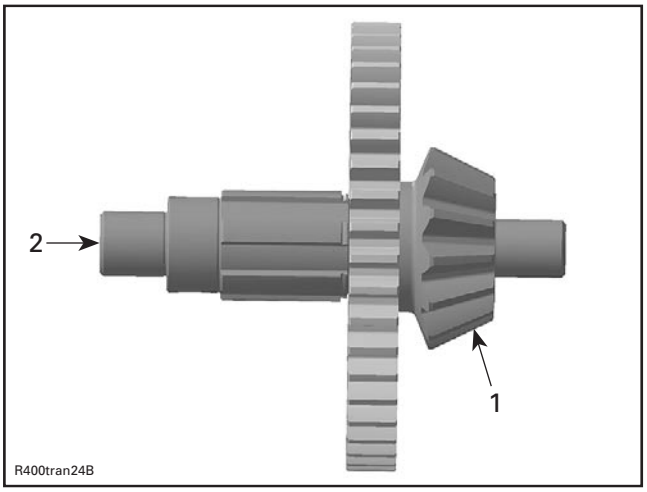

1. *Bevel gear*
2. *Area of written number K to find out value **B***

- C = Distance between butting face (MAG side) to mating surface of crankcase MAG.

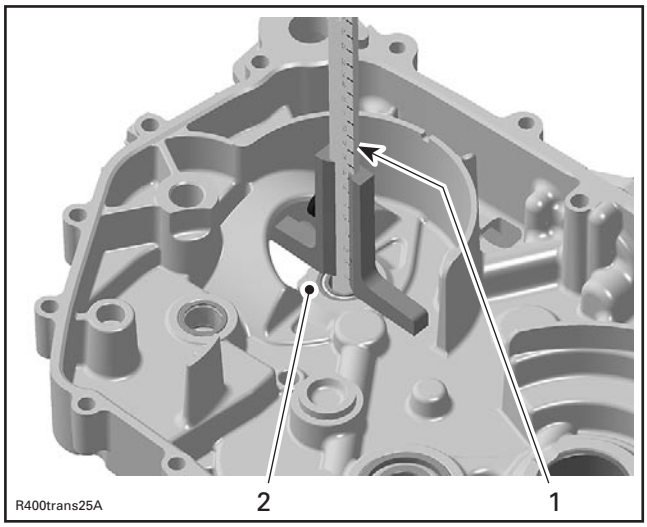

1. *Depth gauge — measurement **C***
2. *Butting face inside of crankcase MAG*

- D = Theoretical shim thickness.
- E = Shim selected in accordance with D.

Use following course of calculation to get the theoretical thickness D for washer **no. 19**.

D = B - C - A

NOTE: Take theoretical value D and choose shim E (MAG side shim) from the below table.

CALCULATED THICKNESS (D)	SHIM NUMBER (E)
1.20 mm to 1.29 mm (.0472 to .0508 in)	120
1.30 mm to 1.39 mm (.0512 to .0547 in)	130
1.40 mm to 1.49 mm (.0551 to .0587 in)	140
1.50 mm to 1.59 mm (.0591 to .0626 in)	150
1.60 mm to 1.69 mm (.0630 to .0665 in)	160
1.70 mm to 1.79 mm (.0669 to .0705 in)	170
1.80 mm to 1.89 mm (.0709 to .0744 in)	180

NOTE: For example, if the measured thickness is 1.53 mm (.0602 in), choose the shim 150. The shim number 150 represents a value equal at 1.50 mm (.0591 in).

https://truckmanualshub.com/

Measure shim on PTO side:

NOTE: Clean mating surfaces of crankcase before measurement. Refer to crankcase assembly procedure.

- F = Distance between mating surface (crankcase PTO) to ball bearing inner race.

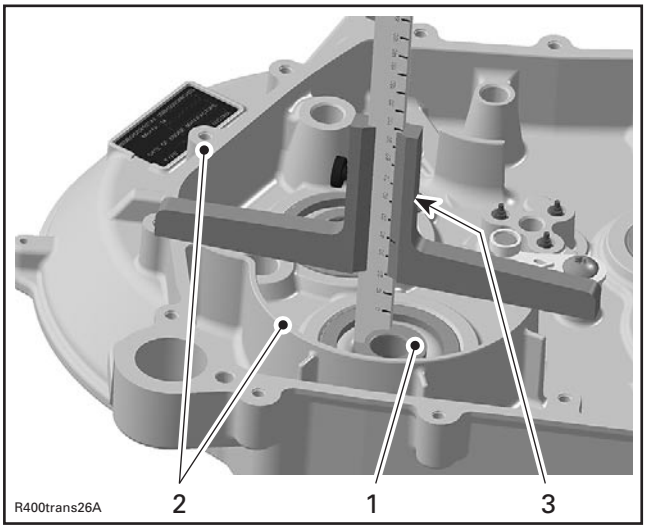

1. *Ball bearing inner race*
2. *Mating surface of crankcase PTO*
3. *Depth gauge*

- G = Distance between mating surface of crankcase MAG and butting face.

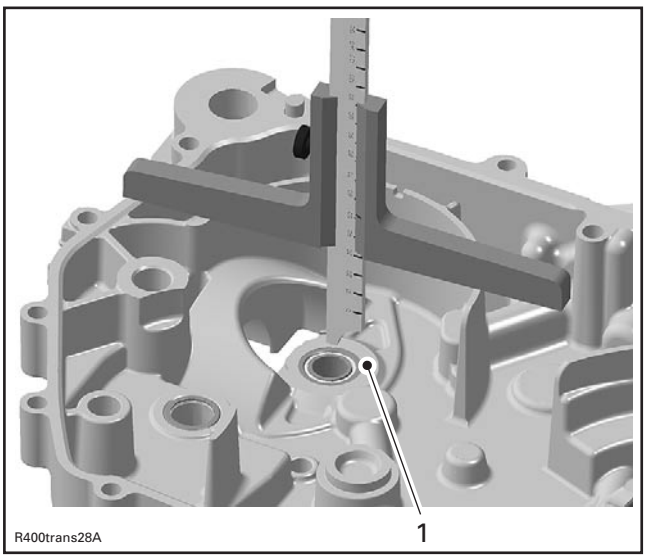

1. *Butting surface*

- H = Distance between butting faces of bevel gear shaft.

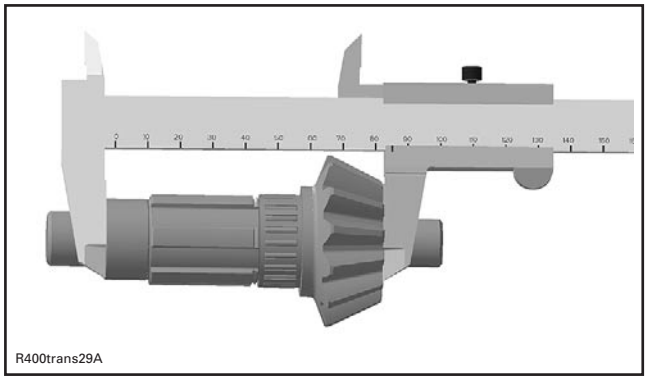

- I = Theoretical shim thickness.
- J = Shim selected in accordance with I.

Use following course of calculation to get the theoretical thickness I for washer **no. 27**.

$$I = F + G - H - A - E$$

NOTE: Take theoretical value I and choose shim J (PTO side shim) from the below table.

CALCULATED THICKNESS (I)	SHIM NUMBER (J)
1.22 mm to 1.31 mm (.0480 to .0516 in)	120
1.32 mm to 1.41 mm (.0519 to .0555 in)	130
1.42 mm to 1.51 mm (.0559 to .0594 in)	140
1.52 mm to 1.61 mm (.0598 to .0634 in)	150
1.62 mm to 1.71 mm (.0638 to .0673 in)	160
1.72 mm to 1.81 mm (0.0677 to .0713 in)	170
1.82 mm to 1.91 mm (.0717 to .0752 in)	180

NOTE: For example, if the measured thickness is 1.53 mm (.0602 in), choose the shim 150.

NOTE: Bevel gear axial clearance of 0.02 to 0.11 mm (.00079 to .00433 in) is included in the above table.

https://truckmanualshub.com/

Example

LETTER	MEASUREMENT 1
A	2 mm (.0787 in)
B	37.760 mm (1.487 in)
C	34.040 mm (1.340 in)
D	1.72 mm (.068 in)
E	170
F	51.800 mm (2.039 in)
G	39.080 mm (1.539 in)
H	85.680 mm (3.373 in)
I	1.500 mm (.059 in)
J	140

Shim on MAG side:

The measure **A** is 2 mm (.0787 in).

Note the measure indicates on bevel gear in the **box B**. Example: 37.760 mm (1.487 in).

Measure the distance **C** then indicates its value in the **box C**. Example: 34.040 mm (1.340 in).

B - C - A = D

(37.760 - 34.040 - 2 = 1.72 mm).

In accordance with the appropriate table, you need a shim number **170**.

Shim on PTO side:

Measure the distance **F**. Indicate this value in the **box F**. Example: 51.800 mm (2.039 in).

Measure the distance **G**. Note this value in the **box G**. Example: 39.080 mm (1.539 in).

Measure the distance between both butting surface of bevel gear shaft. This is the value **H**. Example: 85.680 mm (3.373 in).

F + G - H - A - E = I

(51.800 + 39.080 - 85.680 - 2 - 1.70 = 1.50 mm).

NOTE: The shim number 170 represents a value equal at 1.70 mm (.0669 in). If a shim 160 was required, its value would be 1.60 mm (.0630 in).

In accordance with the appropriate table, you need a shim number **140**.

Installation

For installation, reverse the removal procedure. Pay attention to the following details.

CAUTION: Don't forget thrust washer no. 15 and no. 22.

First install intermediate gear then main shaft and afterward the bevel gear.

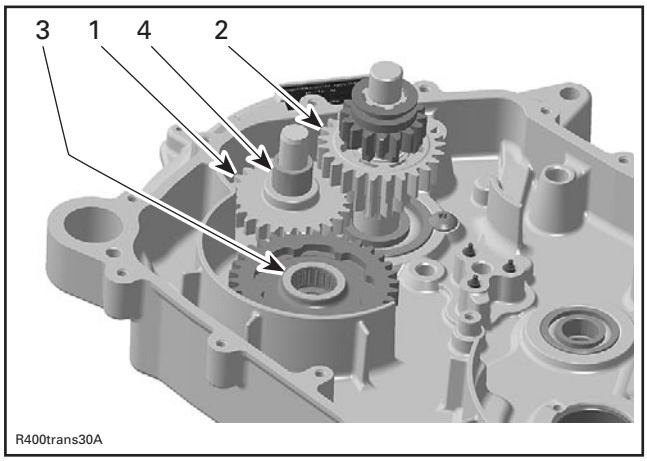

1. *Intermediate gear*
2. *Main shaft*
3. *Thrust washer after main gear on bevel gear*
4. *Thrust washer between distance sleeve and reverse gear*

Install the shift drum.

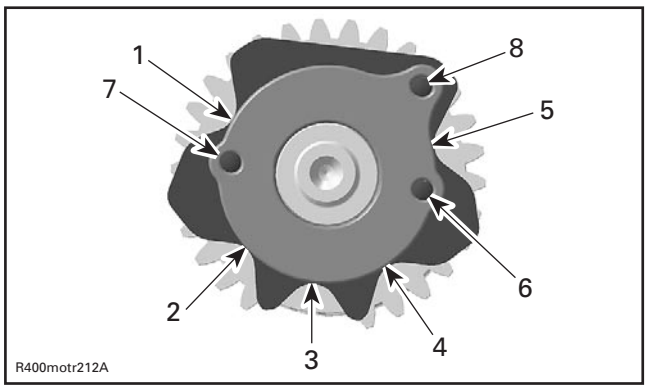

1. *Parking stop location*
2. *Reverse stop location*
3. *Neutral stop location*
4. *High gear stop location*
5. *Low gear stop location*
6. *Contact to stop location for neutral/park position*
7. *Contact to reverse stop location*
8. *Pin to align isolating and index washer*

NOTE: Run all gears as a final function check before reassembling crankcase MAG.

https://truckmanualshub.com/

SHIFTING INDICATOR SWITCH

Test

Prior to remove parts from vehicle and/or engine perform general test as per following procedure:

– Unplug connector from vehicle wire harness.

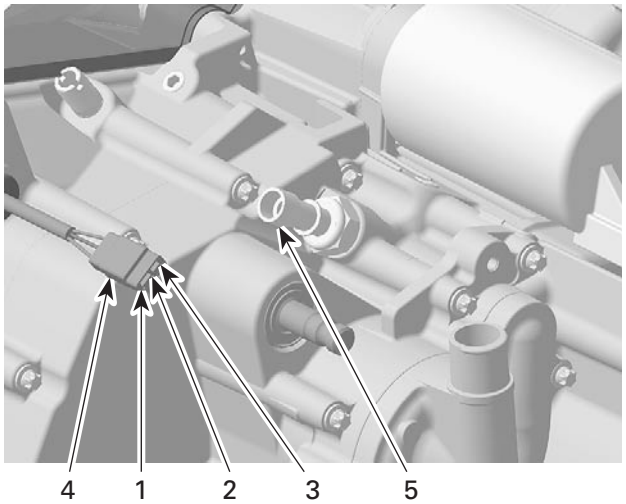

1. *Blue wire for contact to parking gear*
2. *Brown wire for contact to reverse gear*
3. *Green/yellow wire for contact to neutral gear*
4. *Shifting indicator connector to dash board*
5. *Oil pressure area*

– Put vehicle in park, reverse or neutral position and use a multimeter to measure the electric passage from connector (specific cable) to engine ground.

NOTE: For example, shift gear to park position and measure from blue cable of connector to engine ground.

In case of an electrical failure check wire harness **no. 54** and/or shifting indicator switch **no. 55** (see TEST below).

NOTE: The engine removal is not necessary to reach the shifting indicator switches.

To reach the shifting indicator switches, remove:

– CVT cover

– driven pulley.

Removal

NOTE: Clean area from dirt and belt dust before removing parts.

Remove:

– screw **no. 57**

– protection sheet **no. 56**.

NOTE: Clean area from dirt and belt dust before removing shifting indicator switch(es).

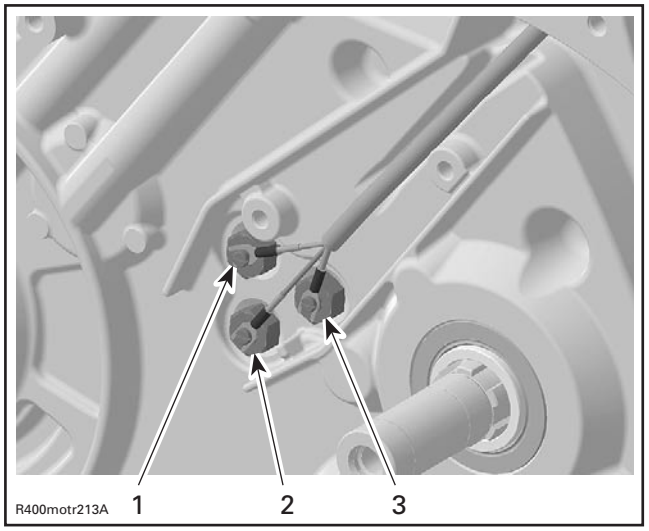

1. *Blue wire for contact to parking gear*
2. *Brown wire for contact to reverse gear*
3. *Green/yellow wire for contact to neutral gear*

Remove screw(s) retaining shifting indicator switch wire(s).

Unscrew the shifting indicator switches **no. 55**.

NOTE: Remove the shifting indicator switches one at a time.

Test

Check if shifting indicator switches work properly as per following procedure:

– Put shift drum in park, reverse or neutral position.

– Use a multimeter to measure electric passage from specific shifting indicator switch to engine ground.

Check wiring harness as per following procedure: Install a pin in the connector.

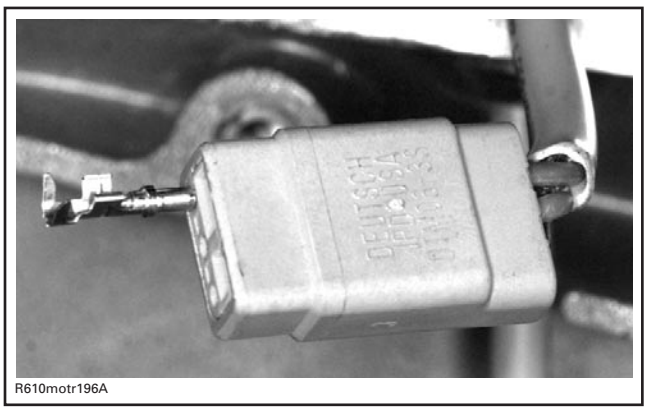

– Place one probe of multimeter on the pin and the other on the opposite side of wire harness (specific cable).

https://truckmanualshub.com/

NOTE: The alligator clip is recommended.

Replace wire harness **no. 54** if damaged, brittle, hard or otherwise damaged.

If the shifting indicator switch and its harness are good, check the vehicle harness and/or indicator lights.

Installation

For installation, reverse the removal procedure. Pay attention to the following details.

If all switches are removed, take care to put back wires at the proper location.

Take care do not damage shifting indicator switches threads during installation.

STARTER DRIVE PINION

Removal

Remove:

– drive pulley (refer to CVT)

– screw **no. 53** retaining starter drive pinion cover

NOTE: Do not lose shims **no. 50, no. 52** and/or spring **no. 49** during removal of starter pinion cover.

– starter drive pinion cover **no. 51**

– starter drive pinion **no. 48**.

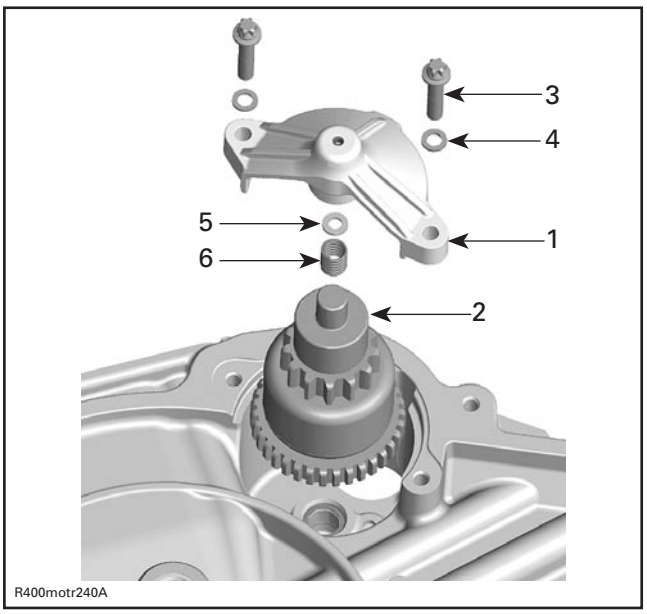

1. *Starter drive pinion cover*
2. *Starter drive pinion*
3. *Screw*
4. *Shim*
5. *Shim*
6. *Spring*

Inspection

Check if starter drive pinion is free of movement.

NOTE: Centrifugal weights avoid disengaging of the pinion while starting the engine.

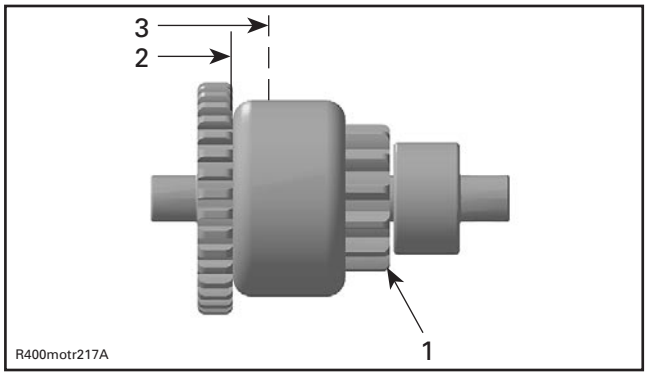

1. *Starter drive pinion*
2. *Starting position (spring released)*
3. *Gear is engaged drive pulley fixed half (spring loaded)*

Replace needle bearing **no. 46** if damaged (see CRANKCASE above).

Check starter drive pinion cover for crack and clean it before reinstallation.

Check bore inside starter drive pinion cover if damaged, worn or otherwise damaged. Replace as necessary.

Installation

For installation, reverse the removal procedure.

NOTE: Apply multi-purpose grease inside starter drive pinion cover.

https://truckmanualshub.com/

CVT

NOTE: This is a lubrication free system except drive pulley one-way clutch.

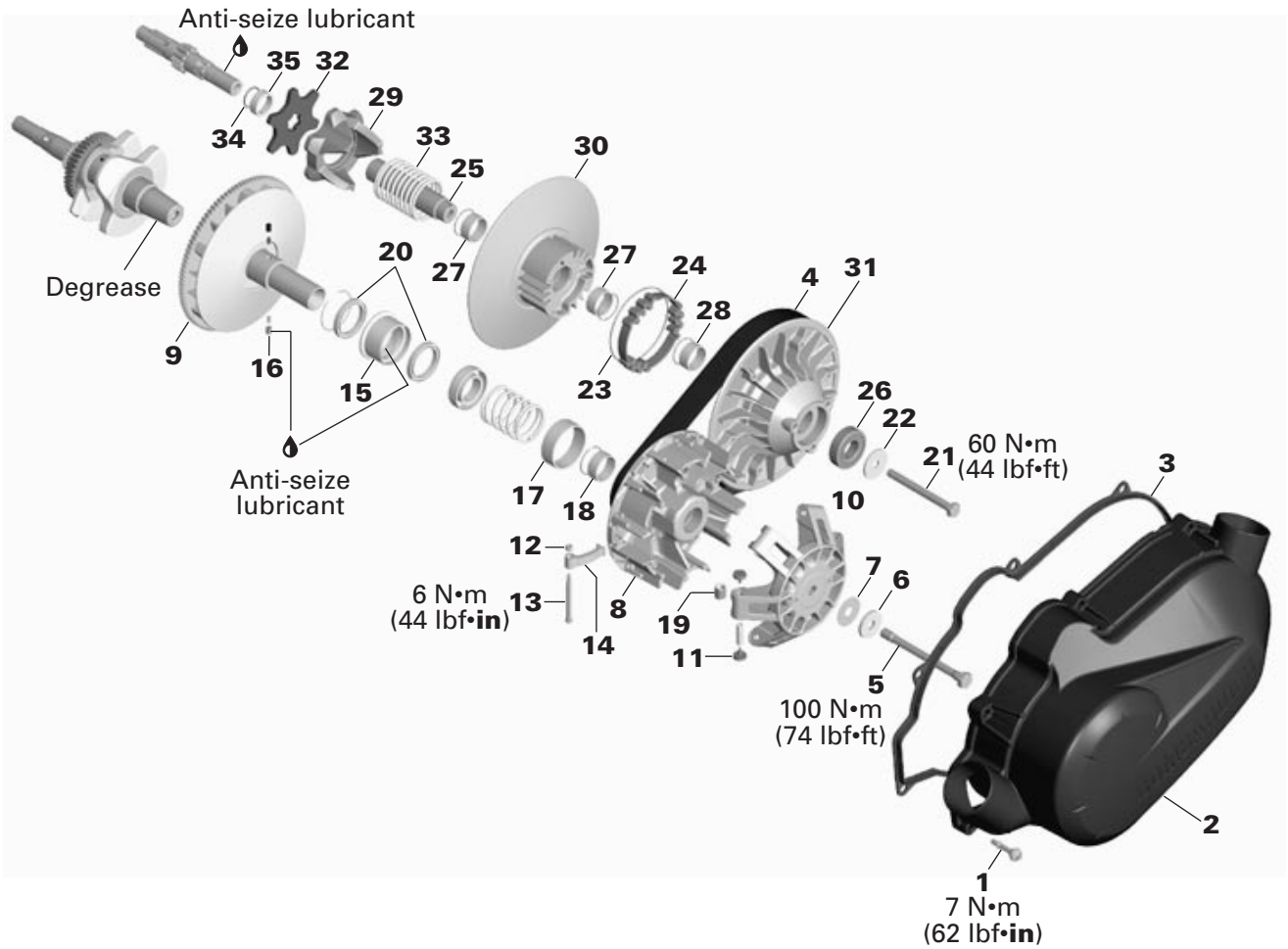

R400motr238S

https://truckmanualshub.com/

GENERAL

NOTE: For a better understanding, the following illustrations are taken with engine out of vehicle. To perform the following instructions, it is not necessary to remove engine.

This CVT is lubrication free. Never lubricate any components except drive pulley one-way clutch.

During assembly/installation, use the torque values and service products as in the exploded views.

Clean threads before applying a threadlocker. Refer to SELF-LOCKING FASTENERS and LOCTITE APPLICATION at the beginning of this manual for complete procedure.

⚠ WARNING

Torque wrench tightening specifications must strictly be adhered to.

Locking devices (ex.: locking tabs, elastic stop nuts, self-locking fasteners, cotter pin, etc.) must be installed or replaced with new ones where specified. If the efficiency of a locking device is impaired, it must be renewed.

⚠ WARNING

Never touch CVT while engine is running. Never drive vehicle when CVT cover is removed.

⚠ WARNING

Any drive pulley repairs must be performed by an authorized Bombardier ATV dealer. Subcomponent installation and assembly tolerances require strict adherence to procedures detailed.

⚠ WARNING

Never use any type of impact wrench at drive pulley removal and installation.

⚠ WARNING

The clutch assembly is a precisely balanced unit. Never replace parts with used parts from another clutch assembly.

CAUTION: These pulleys have metric threads. Do not use imperial thread puller. Always tighten puller by hand to ensure that the drive pulley has the same type of threads (metric vs imperial) before tightening completely.

BELT REPLACEMENT

Removal

Remove:

– LH engine side panel

– LH footwell.

Unscrew clamps retaining CVT cover hoses.

Remove:

– screws **no. 1** with mounted rubber bushings CVT cover **no. 2** and gasket **no. 3**.

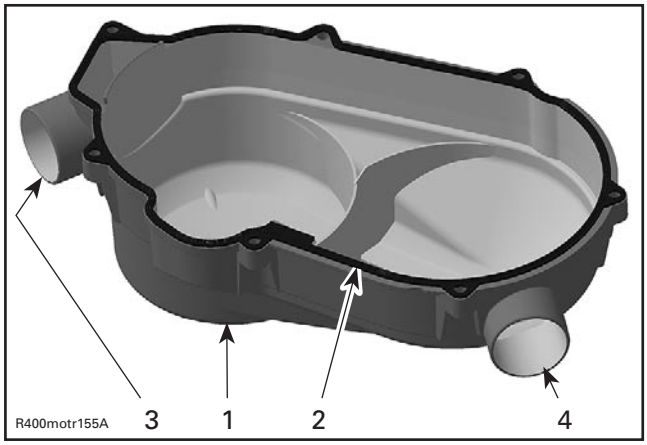

1. *CVT cover*
2. *Gasket*
3. *Intake for air cooling*
4. *Air outlet*

NOTE: Remove the center top screw last. This screw supports the cover during removal.

Open driven pulley with the driven pulley expander (P/N 529 035 747).

https://truckmanualshub.com/

Screw tool in the threaded hole of driven pulley and tighten to open the pulley.

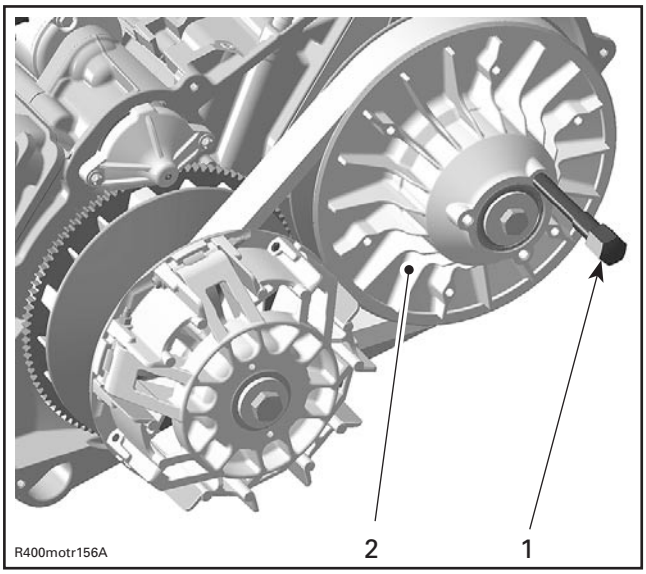

1. *Driven pulley expander*
2. *Fixed half of driven pulley*

To remove belt **no. 4**, slip the belt over the top edge of sliding half, as shown.

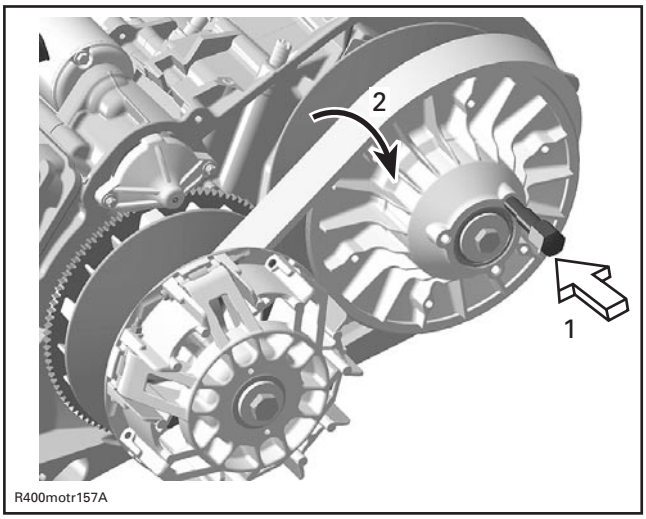

1. *Screw in of driven pulley expander*
2. *Removal direction for belt*

Inspection

Inspect belt for cracks, fraying or abnormal wear. Replace if necessary.

Check drive belt width. Replace if it is out of specification (see table below).

DRIVE BELT WIDTH	
NEW NOMINAL	32.00 mm (1.260 in)
SERVICE LIMIT	30.00 mm (1.181 in)

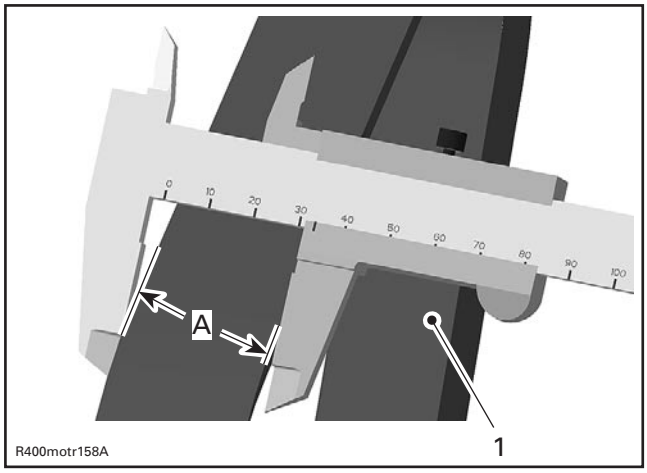

1. *Drive belt*
A. *Belt width*

Installation

For installation, reverse the removal procedure. Pay attention to following details.

The maximum drive belt life span is obtained when the drive belt has the proper rotation direction. Install it so the arrow printed on belt is pointing towards the back of the vehicle.

NOTE: Put a small amount of Loctite 5910 in the groove of CVT cover to ease installation of CVT cover with gasket **no. 3**.

Install the center top screw of cover in first.

Install the other screws then torque them in a criss-cross sequence.

DRIVE PULLEY

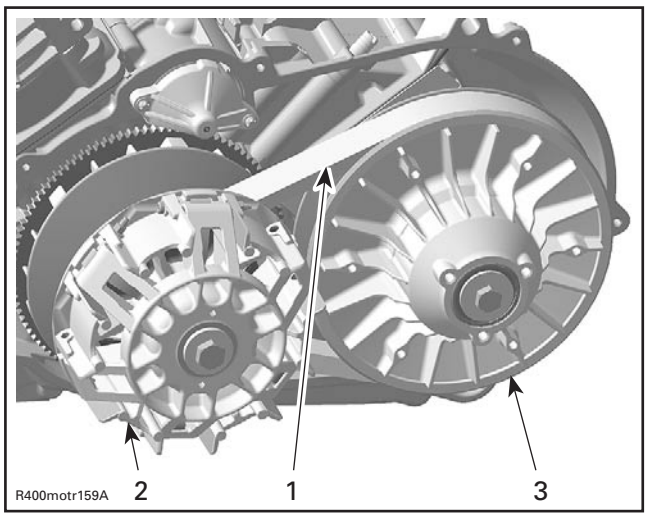

1. *Belt*
2. *Drive pulley*
3. *Driven pulley*

https://truckmanualshub.com/

Removal of Drive Pulley

Remove belt **no. 4**.

NOTE: To remove drive pulley, two procedures can be followed.

⚠ WARNING

Drive pulley screw has a left-hand thread.

First possible procedure:

– Remove the spark plug (refer to CYLINDER AND HEAD).
– Put piston at TDC and lock crankshaft with crankshaft locking bolt (P/N 529 035 617).

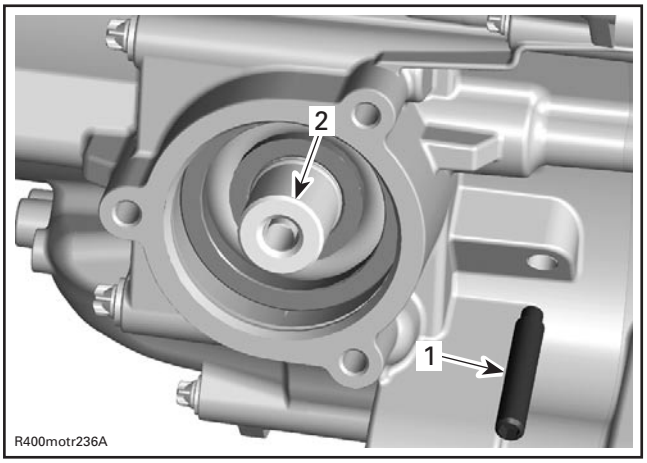

1. Crankshaft locking bolt
2. Output shaft (front side)

Second possible procedure:

– Block drive pulley with clutch holding tool (P/N 529 006 400).

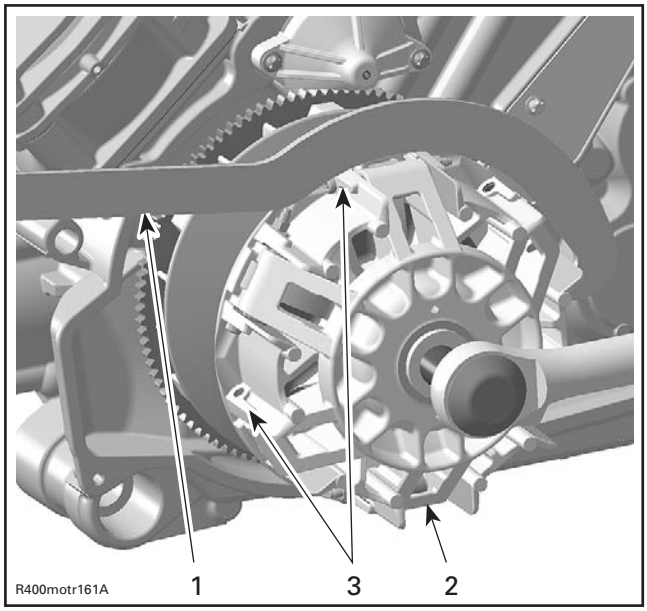

1. Clutch holding tool (P/N 529 006 400)
2. Drive pulley sliding half
3. Area to place holding tool hook

CAUTION: Prior to removing the drive pulley, mark sliding half and governor cup together to ensure correct reinstallation. There are only 4 levers mounted out of 6 possible positions for the Outlander 400 execution. On the Outlander 330, there are 3 levers mounted out of 6 possible positions.

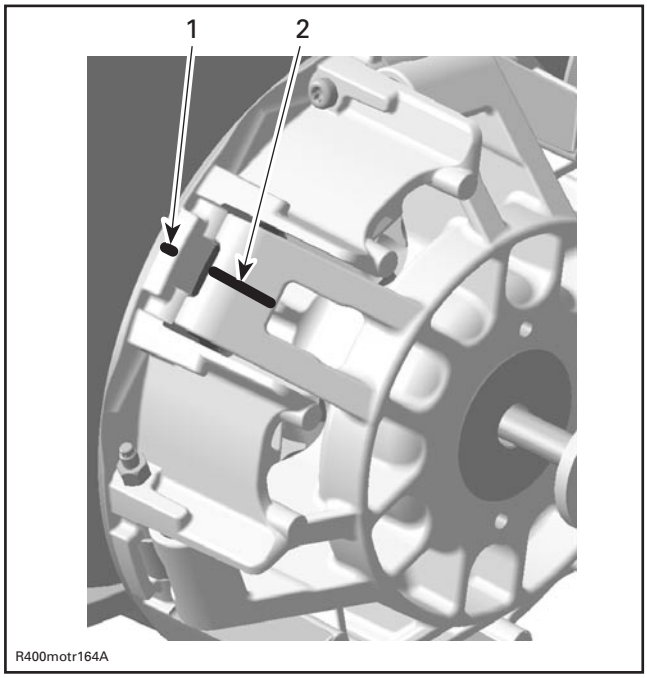

1. Mark on drive pulley sliding half
2. Mark on governor cup

https://truckmanualshub.com/

Remove drive pulley screw **no. 5**, spring washer **no. 6** and thrust washer **no. 7**.

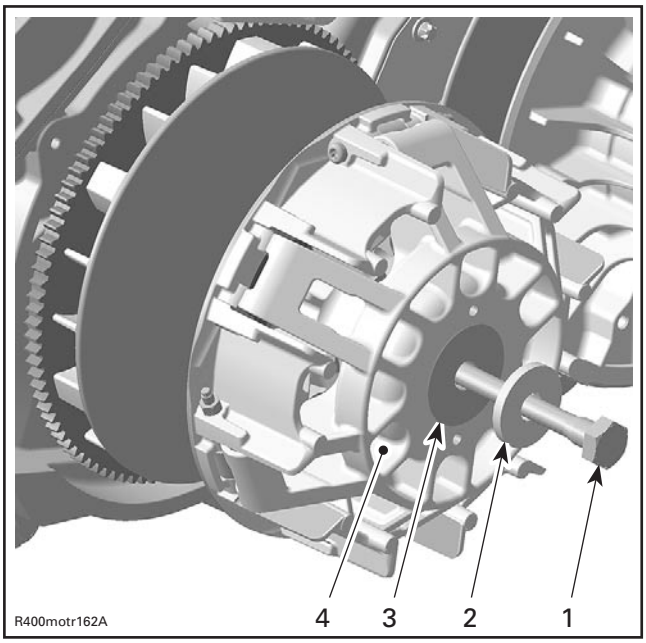

1. *Drive pulley screw*
2. *Spring washer*
3. *Thrust washer*
4. *Drive pulley sliding half*

⚠ WARNING

Sliding half of drive pulley is spring loaded.

Push the sliding half **no. 8** of the drive pulley by hand then remove the screw completely.

Slowly release sliding half.

Screw clutch puller (P/N 529 035 746) in fixed half **no. 9** then withdraw fixed pulley.

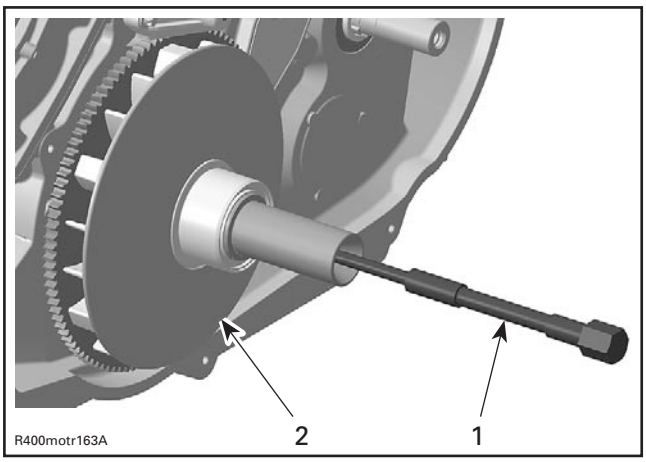

1. *Clutch puller*
2. *Fixed half*

Disassembly of Drive Pulley

Governor Cup

Carefully lift governor cup **no. 10** until slider shoes **no. 11** come at their highest position into guides.

Sliding Half

Unscrew lock nut **no. 12** and remove centrifugal lever pivot bolt **no. 13**.

NOTE: Outlander 400 shows 4 lever pivot bolt and Outlander 330 only 3 levers.

Remove centrifugal lever **no. 14**.

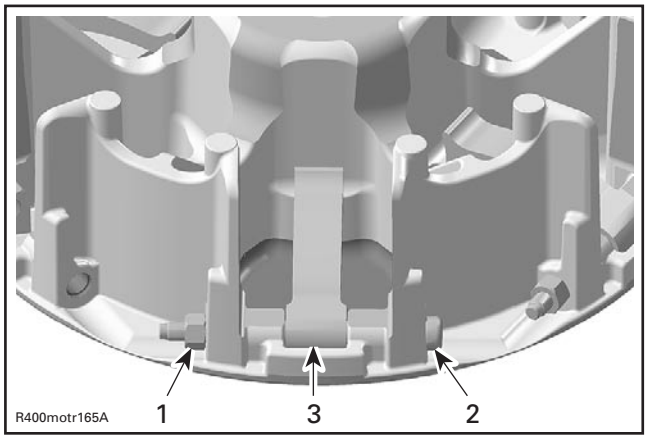

1. *Lock nut*
2. *Centrifugal lever pivot bolt*
3. *Centrifugal lever*

Fixed Half

⚠ WARNING

Always wear safety glasses to remove spring sleeves.

https://truckmanualshub.com/

Pull one-way clutch **no. 15** slowly until the half of spring sleeves **no. 16** is visible.

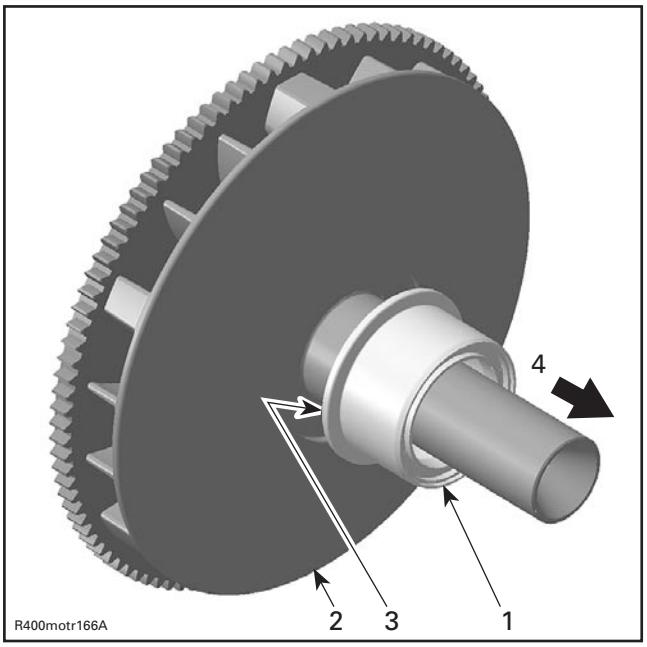

1. *One-way clutch*
2. *Fixed half*
3. *Spring sleeve area*
4. *Direction of removal*

Hold both spring sleeves with fingers and release them when one-way clutch is out of engagement.

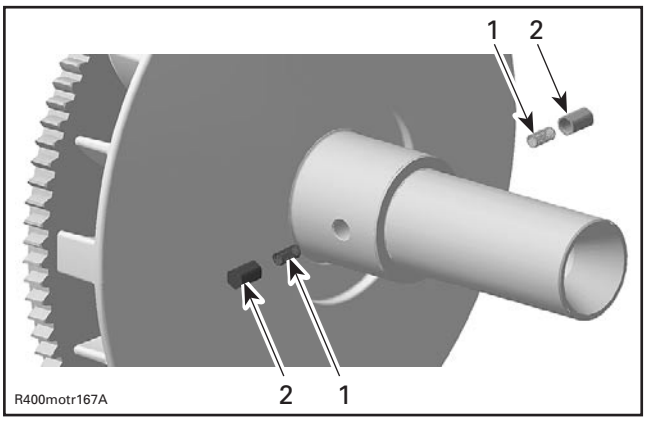

1. *Spring*
2. *Spring sleeve*

Cleaning of Drive Pulley

Clean pulley faces and shaft with fine steel wool and dry cloth.

Using a paper towel with cleaning solvent, clean crankshaft tapered end and the taper inside of the fixed half of the drive pulley, crankshaft threads and threads of drive pulley screw **no. 5**.

⚠ WARNING

This procedure must be performed in a well-ventilated area.

CAUTION: To avoid damage, make sure cleaner does not contact the crankshaft seal.

Remove all hardened oil deposits that have baked on crankshaft and pulley tapered surfaces with coarse or medium steel wool and/or sand paper no. 600.

CAUTION: Do not use any other type of abrasive.

Reclean mounting surfaces with paper towel and cleaning solvent.

Wipe off the mounting surfaces with a clean, dry paper towel.

CAUTION: Mounting surfaces must be free of any oil, cleaner or towel residue.

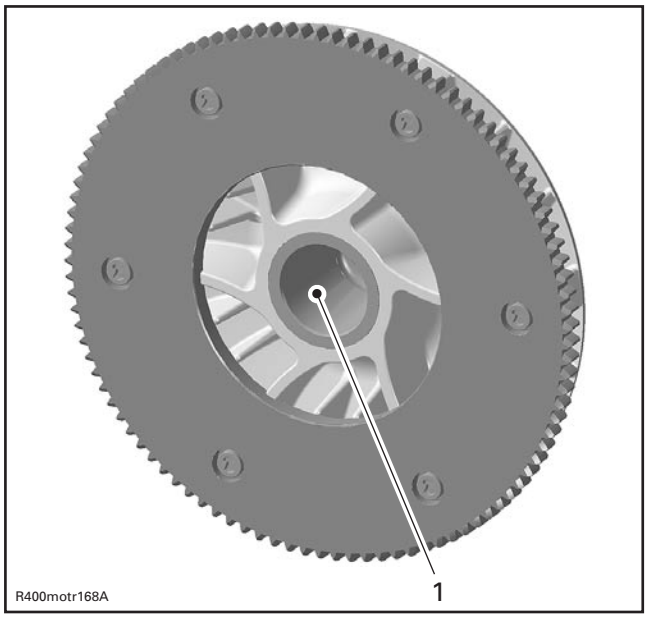

1. *Taper of fixed half*

Only use petrol base cleaner when cleaning bushings **no. 17** and **no. 18**.

CAUTION: Do not use acetone to clean bushing.

Inspection of Drive Pulley

Drive Pulley

Drive pulley should be inspected annually.

Governor Cup

Check governor cup for cracks or other visible damages. Replace if necessary.

https://truckmanualshub.com/

Roller

Check each roller **no. 19** for roundness of external diameter.

NOTE: Replace governor cup if the roller does not move freely.

Measure the roller diameter. If a roller is out of specification, replace governor cup.

ROLLER DIAMETER	
MINIMUM (new)	13.70 mm (.539 in)
MAXIMUM (new)	13.90 mm (.547 in)
SERVICE LIMIT	13.20 mm (.519 in)

Centrifugal Lever Pivot Bolt

Measure diameter of centrifugal lever pivot bolt **no. 13**, replace if it is out of specification.

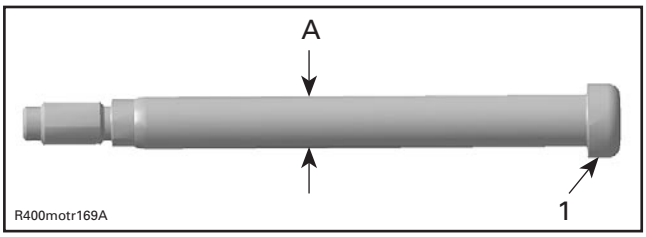

1. Centrifugal lever pivot bolt
A. Measure diameter here

CENTRIFUGAL LEVER PIVOT BOLT DIAMETER	
MINIMUM (new)	6.078 mm (.239 in)
MAXIMUM (new)	6.100 mm (.240 in)
SERVICE LIMIT	6.00 mm (.236 in)

Centrifugal Lever

Check bushing diameter in the centrifugal lever **no. 14** for wear. If a centrifugal lever must be replaced, replace all levers at the same time.

CENTRIFUGAL LEVER BORE DIAMETER	
SERVICE LIMIT	6.200 mm (.244 in)

Replace centrifugal lever **no. 14** with screws **no. 13** and lock nuts **no. 12** if the contact surfaces show heavy visible wear.

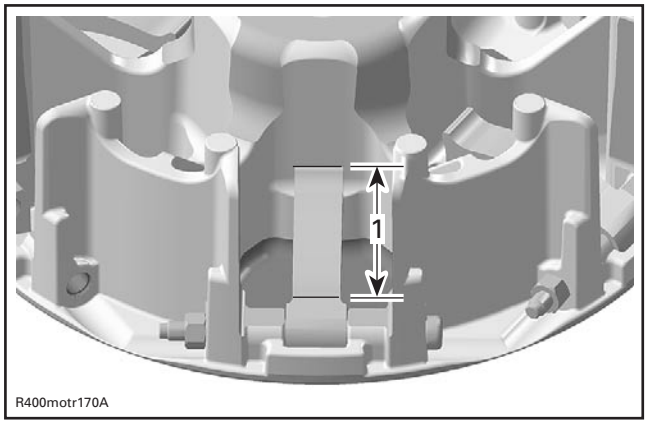

1. Contact surface to the roller

⚠ WARNING

Whenever replacing centrifugal levers, **always replace all levers at the same time.** Otherwise, the drive pulley will be unbalanced (because of lever differences).

Slider Shoe

Check slider shoes **no. 11** for visible wear and replace if damaged.

NOTE: If necessary, use a screwdriver to remove slider shoes.

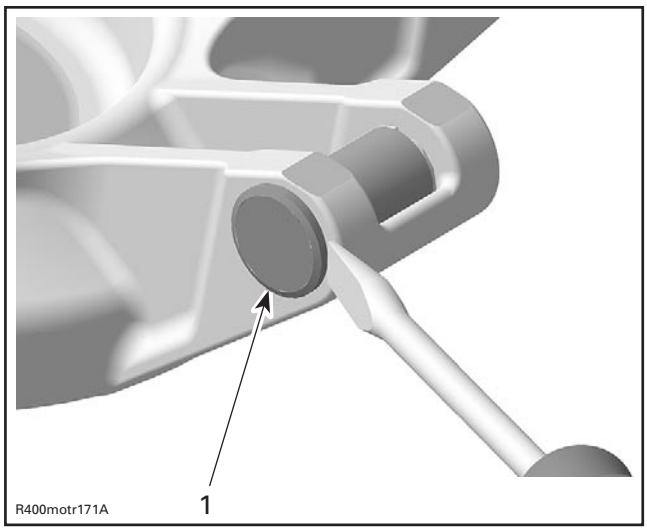

1. Slider shoe

Sliding Half

Check sliding half for cracks and sliding contact surface for excessive wear. Replace sliding half if necessary.

https://truckmanualshub.com/

Measure centrifugal lever pivot bolt bores. Replace sliding half if bores are out of specification or damaged.

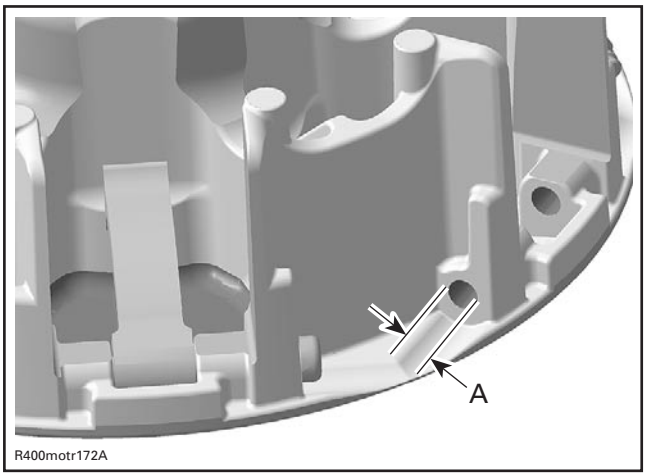

A. Centrifugal lever pivot bolt bore diameter

CENTRIFUGAL LEVER PIVOT BOLT BORE DIAMETER	
MINIMUM (new)	6.113 mm (.241 in)
MAXIMUM (new)	6.171 mm (.243 in)
SERVICE LIMIT	6.300 mm (.248 in)

Measure bushing diameters of sliding half.

Use a dial bore gauge to measure bushing diameter. Measuring point must be at least 5 mm (1/4 in) from bushing edge.

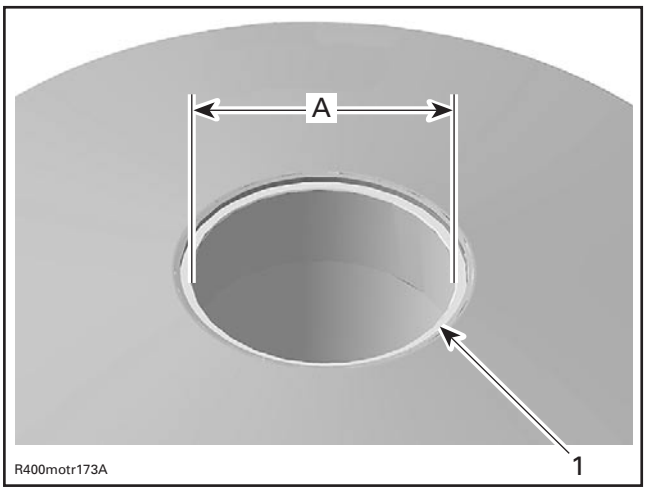

1. Bushing on fixed half side
A. Bore diameter of bushing

SLIDING HALF SMALL BUSHING	
MINIMUM (new)	55.000 mm (2.165 in)
MAXIMUM (new)	55.020 mm (2.166 in)
SERVICE LIMIT	55.200 mm (2.173 in)

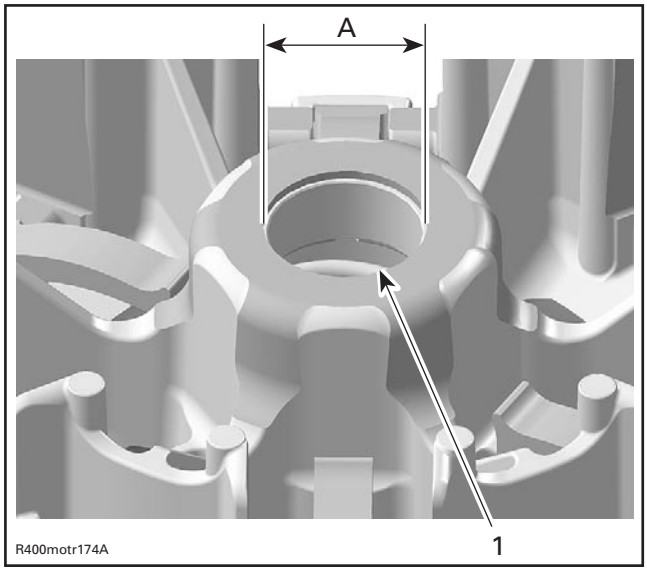

1. Bushing on governor cup side
A. Bore diameter of bushing

SLIDING HALF LARGE BUSHING	
MAXIMUM (new)	30.000 mm (1.181 in)
MAXIMUM (new)	30.020 mm (1.182 in)
SERVICE LIMIT	30.200 mm (1.189 in)

Replace sliding half if bushings **no. 17** and/or **no. 18** is(are) out of specification. Visually inspect coatings.

Fixed Half

Check fixed half contact surface to the governor cup for scorings and other damages. If so, replace fixed half.

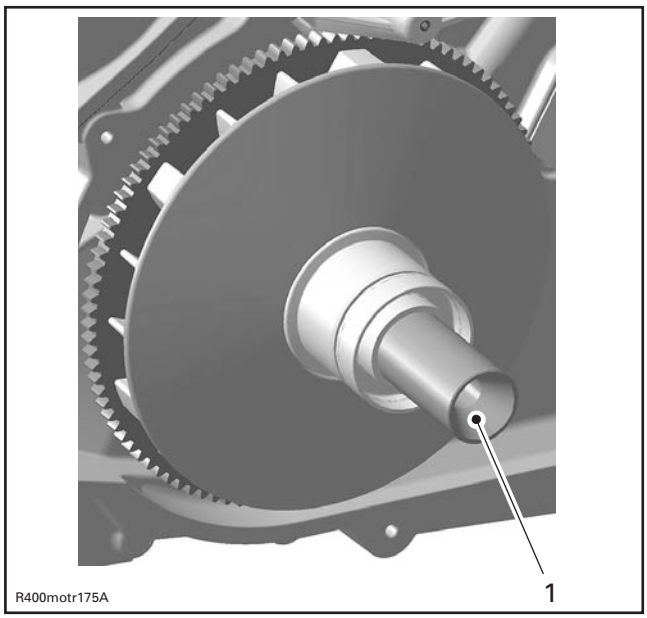

1. Visually check here

https://truckmanualshub.com/

Check for any marks on fixed half plate. Replace if necessary.

Check ring gear teeth for excessive wear or other damage. Replace fixed half if necessary.

⚠ WARNING

Fixed half and ring gear are balanced together. Always replace both parts together otherwise severe injury and/or damages may occur.

Spring

Measure spring free length and squareness. If spring is out of specification, replace by a new.

SPRING FREE LENGTH	
SERVICE LIMIT	75 mm (2.953 in)

CLUTCH SPRING SQUARENESS	
SERVICE LIMIT	4 mm (.157 in)

One-Way Clutch

Check bearings **no. 20** for excessive play and smooth operation. Replace one-way clutch if necessary.

CAUTION: Be careful not to damage the inside of one-way clutch no. 15 during bearing removal.

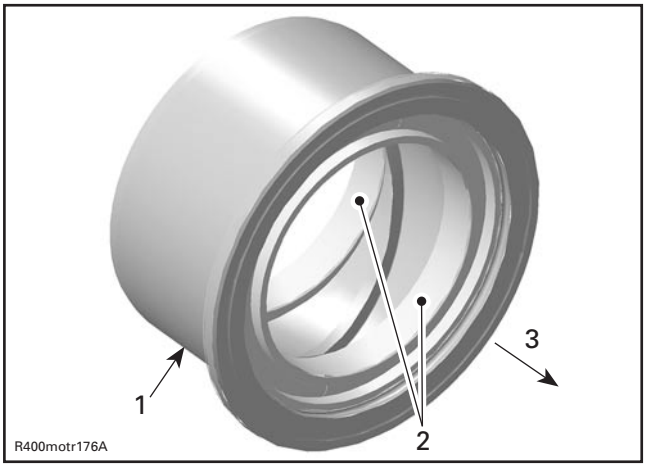

1. One-way clutch
2. Bearings
3. Drive pulley sliding half side

BUSHING BORE DIAMETER	
MAXIMUM (new)	39.990 mm (1.574 in)
MAXIMUM (new)	40.085 mm (1.578 in)
SERVICE LIMIT	40.100 mm (1.579 in)

Measure length of spring sleeve **no. 16** and check if edges on top of the spring sleeve are excessively worn. If out of specifications, replace both spring sleeves and springs at the same time.

SPRING SLEEVE LENGTH	
SERVICE LIMIT	9 mm (.276 in)

Assembly of Drive Pulley

For assembly, reverse the disassembly procedure. Pay attention to following details.

NOTE: Lubricate spring sleeve **no. 16** prior to reinstall the one-way clutch.

CAUTION: Centrifugal lever no. 14 and rollers no. 19 must move easily after installation.

Insert slider shoes into governor cup to properly slide in guides.

Installation of Drive Pulley

For installation, reverse the removal procedure. Pay attention to the following details.

⚠ WARNING

Do not apply anti-seize or any lubricant on crankshaft and drive pulley tapers.

⚠ WARNING

Never use any type of impact wrench at drive pulley removal and installation.

Clean mounting surfaces as described in CLEANING above.

Install drive pulley on crankshaft extension.

Install spring washer **no. 6** with its concave side towards drive pulley then install drive pulley screw **no. 5**.

⚠ WARNING

Never substitute spring washer and/or screw with jobber ones. Always use Bombardier genuine parts for this particular case.

Install clutch holding tool (P/N 529 006 400) and torque screw to 100 N•m (74 lbf•ft).

⚠ WARNING

Drive pulley screw has a left-hand thread.

https://truckmanualshub.com/

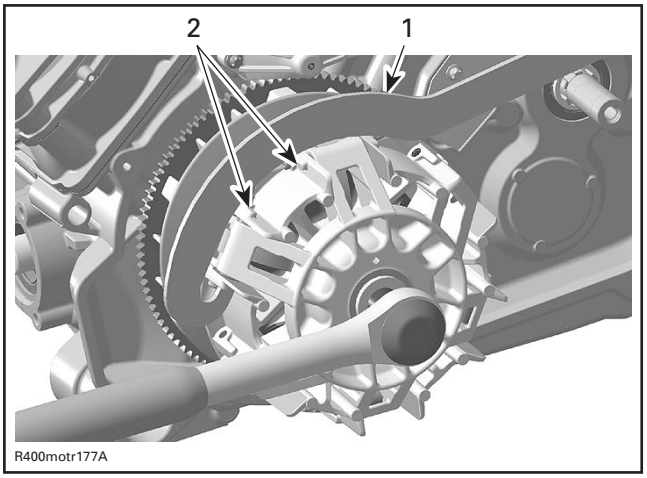

1. *Clutch holding tool (P/N 529 006 400)*
2. *Drive pulley removal/installation area*

DRIVEN PULLEY

Removal of Driven Pulley

Remove:

– belt **no. 4** (see BELT REPLACEMENT above)

– driven pulley.

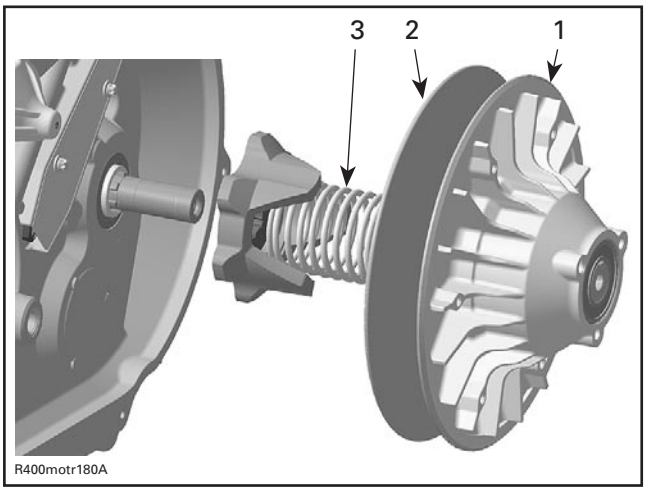

1. *Fixed half of driven pulley*
2. *Sliding half of driven pulley*
3. *Spring*

NOTE: Two procedures can be carried out to remove driven pulley.

First possible procedure:

– Block driven pulley fixed half with clutch holding tool (P/N 529 035 771) then remove the driven pulley bolt **no. 21** and the washer **no. 22**.

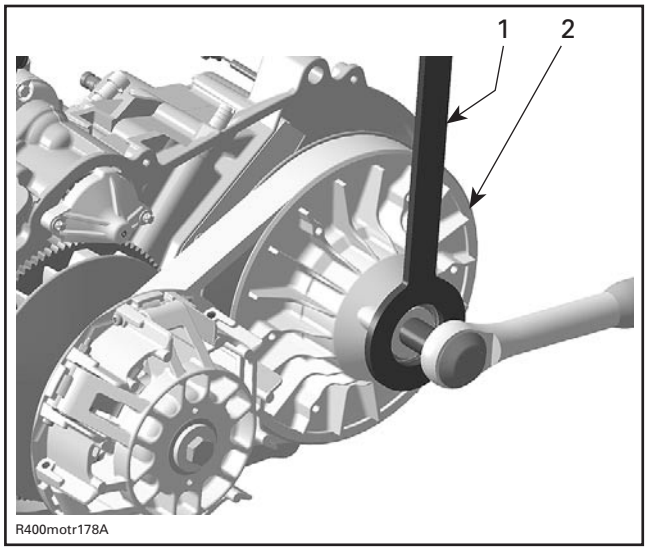

1. *Clutch holding tool (P/N 529 035 771)*
2. *Driven pulley fixed half*

Second possible procedure:

– Block driven pulley with clutch holding tool (P/N 529 006 400) then remove the driven pulley bolt **no. 21** and the washer **no. 22**.

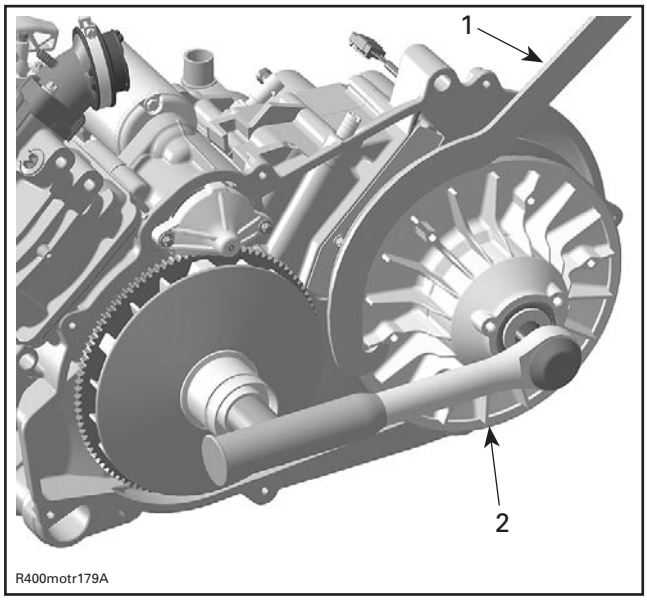

1. *Clutch holding tool (P/N 529 006 400)*
2. *Driven pulley fixed half*

https://truckmanualshub.com/

Disassembly of Driven Pulley

Fixed Half

Remove retaining ring **no. 23** and lift torque gear **no. 24**.

NOTE: The following procedure is not necessary except if ball bearing or shaft must be removed. Refer to INSPECTION before proceeding.

Heat ball bearing area up to 100°C (212°F) before removing ball bearing.

Use a soft hammer to push shaft **no. 25** with bearing **no. 26** out of fixed half.

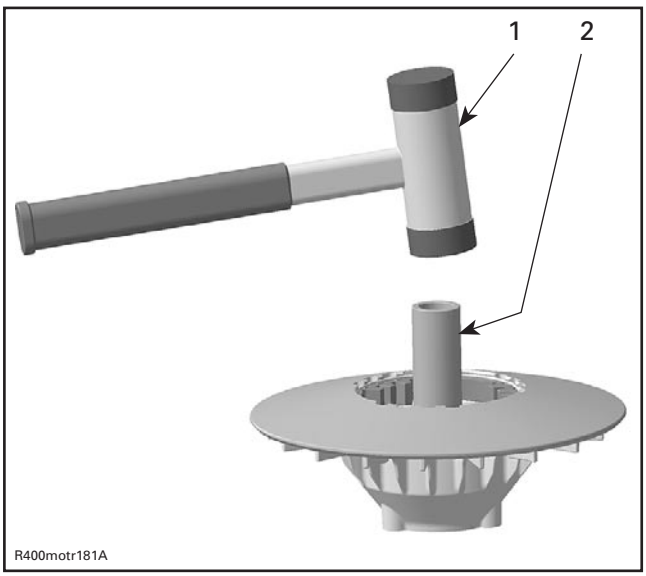

1. *Soft hammer*
2. *Shaft*

Remove shaft from ball bearing.

Cleaning of Driven Pulley

To remove a dust deposit from cam or shaft, use a dry cloth.

Clean pulley faces and shaft with fine steel wool and dry cloth.

Use pulley flange cleaner (P/N 413 711 809) to clean driven pulley.

Clean the CVT crankcase area from contamination.

Using a paper towel with cleaning solvent to clean main shaft end and the inside of the shaft **no. 25**.

⚠ WARNING

This procedure must be performed in a well-ventilated area.

CAUTION: To avoid damage, make sure cleaner does not contact the countershaft seal.

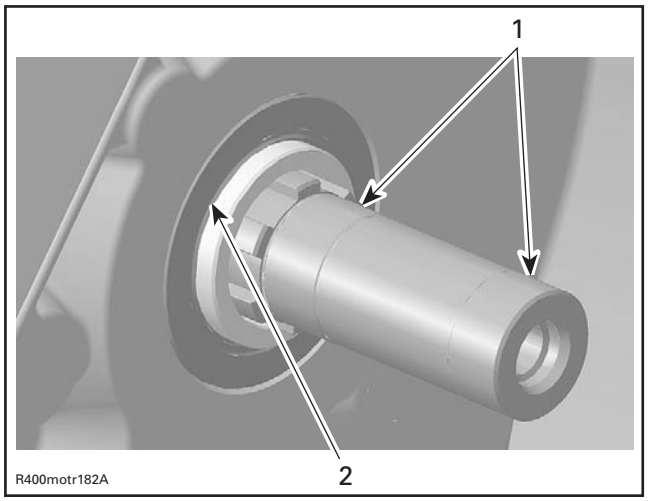

1. *Main shaft support*
2. *Sealing lip of countershaft oil seal*

Inspection

Sliding Half

Check bushings **no. 27** for cracks, scratch and for free movement when assembled to sliding half.

Using a dial bore gauge, measure bushing diameter. Measuring point must be at least 5 mm (1/4 in) from bushing edge.

This bushing is not replaceable. Replace sliding half if bushings **no. 27** are out of specification. Visually inspect coatings.

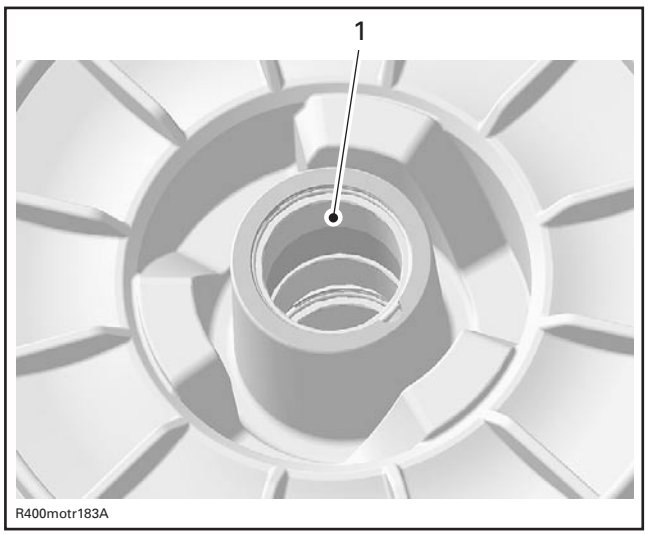

1. *Bushings*

https://truckmanualshub.com/

BUSHING BORE DIAMETER	
MAXIMUM (new)	30.000 mm (1.181 in)
MAXIMUM (new)	30.020 mm (1.182 in)
SERVICE LIMIT	30.200 mm (1.189 in)

Fixed Half

Check ball bearing for free play and smooth operation. Replace if necessary.

Check shaft for heavy wear or visible damage. Replace if necessary.

If the shaft is removed, measure bushing diameter with a dial bore gauge. Measuring point must be at least 5 mm (1/4 in) from bushing edge.

This bushing is not replaceable. Replace fixed half if bushing **no. 28** is out of specification. Visually inspect coatings.

BUSHING BORE DIAMETER	
MAXIMUM (new)	30.000 mm (1.181 in)
MAXIMUM (new)	30.020 mm (1.182 in)
SERVICE LIMIT	30.200 mm (1.189 in)

Check torque gear **no. 24** for visible damage and wear limit with a caliper.

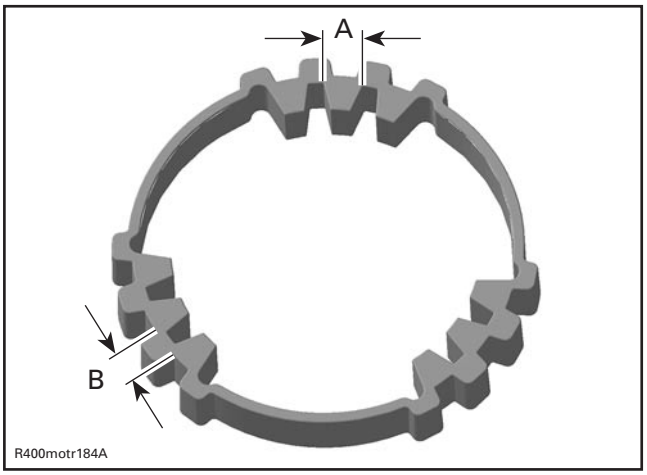

A. Measurement inside
B. Measurement outside

WEAR ON TEETH BOTH SIDES	
SERVICE LIMIT	7.500 mm (.295 in)

Cam

Check cam **no. 29** for visible damage and wear limit with a caliper.

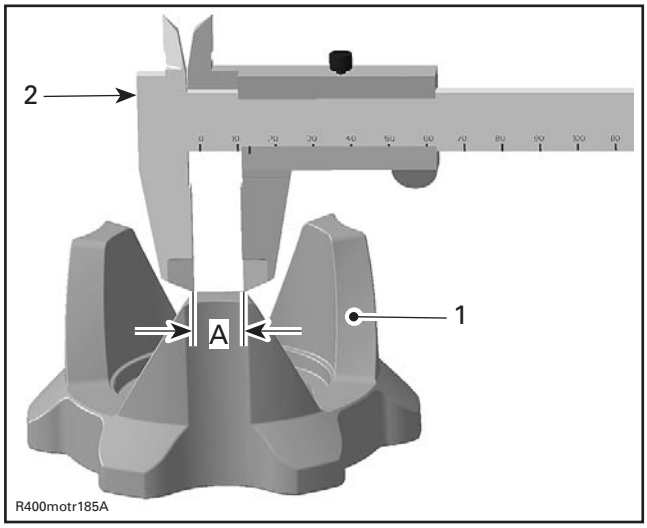

1. Contact surfaces for power train
2. Caliper
A. Width to be measured due to wear on contact surface

WIDTH ON TOP SURFACE	
SERVICE LIMIT	6.000 mm (.236 in)

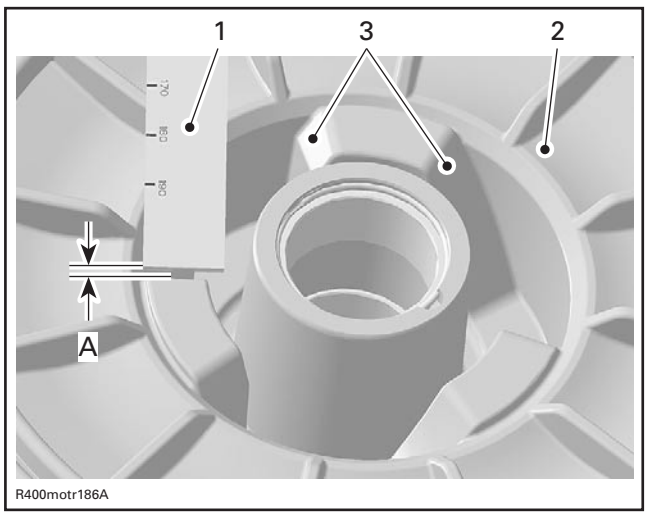

1. Caliper
2. Sliding half
3. Contact surface
A. Wear to be measured

WEAR ON CONTACT SURFACE	
SERVICE LIMIT	2.000 mm (.079 in)

https://truckmanualshub.com/

Spring

Measure spring free length and squareness. If spring is out of specification, replace by a new.

SPRING FREE LENGTH	
SERVICE LIMIT	164 mm (6.457 in)

CLUTCH SPRING SQUARENESS	
SERVICE LIMIT	3.8 mm (.150 in)

Assembly of Driven Pulley

For installation, reverse the removal procedure. Pay attention to following details.

Heat ball bearing area up to 100°C (212°F) before ball bearing installation.

NOTE: Place new ball bearing in a freezer for 10 minutes before installation.

Install ball bearing **no. 26** with the writing on top and push only on the outer ring.

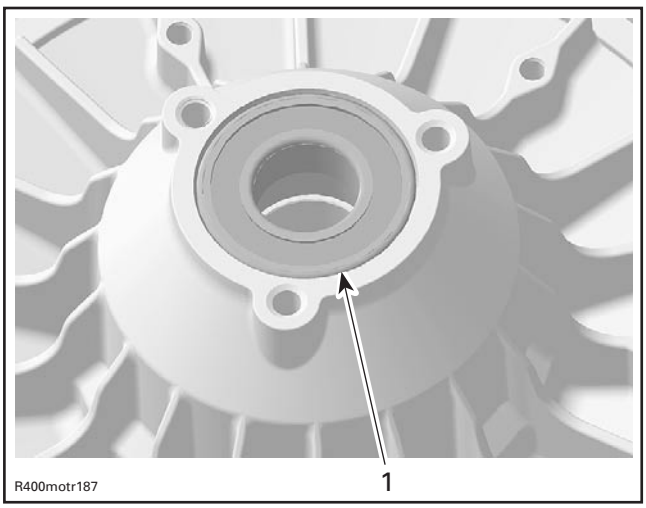

1. Ball bearing

CAUTION: Do not use a hammer, use a press machine only.

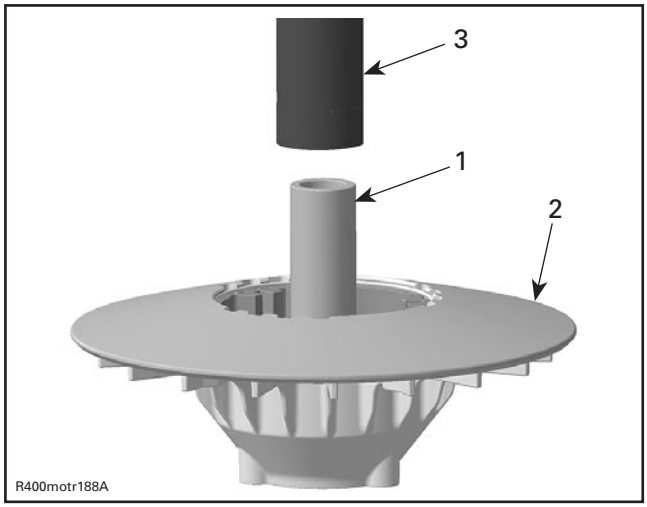

1. Shaft
2. Fixed half
3. Press machine

Install torque gear **no. 24** then secure it with retaining ring **no. 23**.

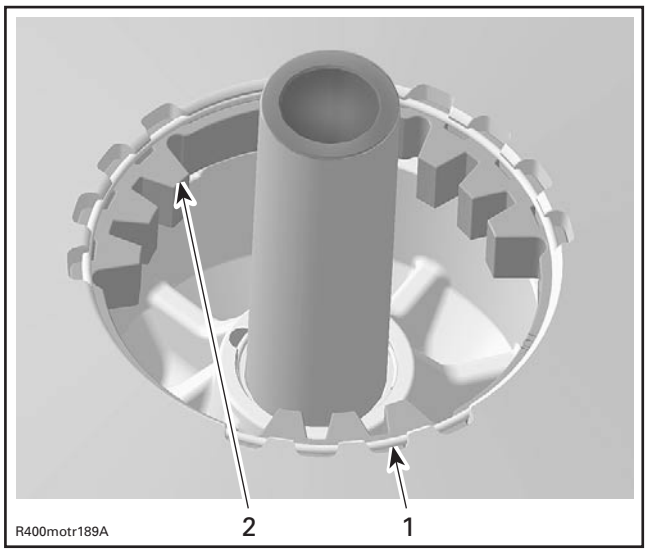

1. Retaining ring
2. Torque gear

https://truckmanualshub.com/

Installation of Driven Pulley

For installation, reverse the removal procedure. Pay attention to the following details.

Install sliding half **no. 30** into fixed half **no. 31**.

Place O-ring **no. 34** on main shaft splines and move it with spacer **no.** 35 in end position.

CAUTION: Chamfer on inside diameter of the spacer must face engine side.

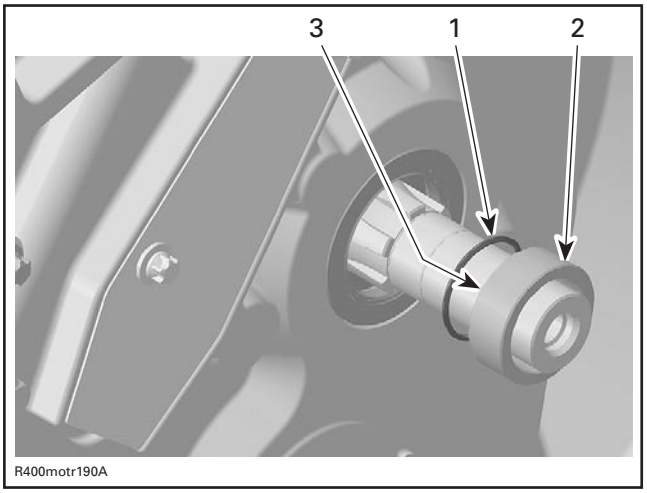

1. *O-ring*
2. *Distance sleeve*
3. *Chamfered area of distance sleeve*

Install cam retainer **no. 32** on main shaft end the right way then install cam **no. 29**.

NOTE: Place cam retainer **no. 32** with printed mark ENGINE SIDE towards the engine.

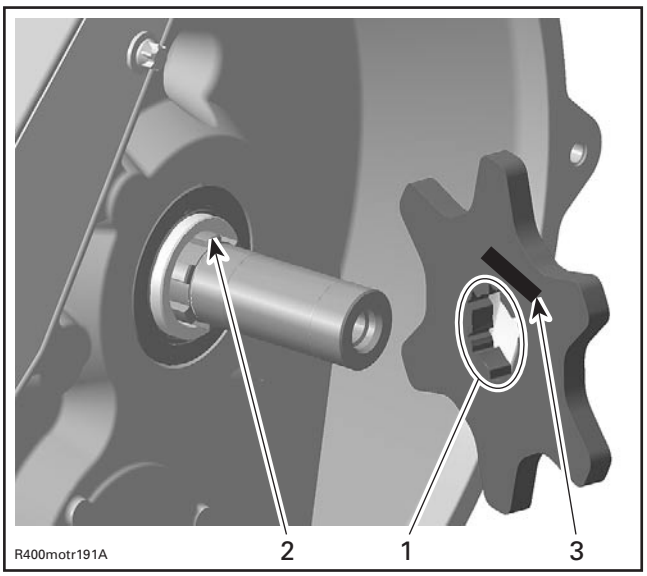

1. *Sharp edge of cam retainer to engine side*
2. *Main shaft spline*
3. *Inscription*

Place spring **no. 33** behind sliding half then align driven pulley with cam.

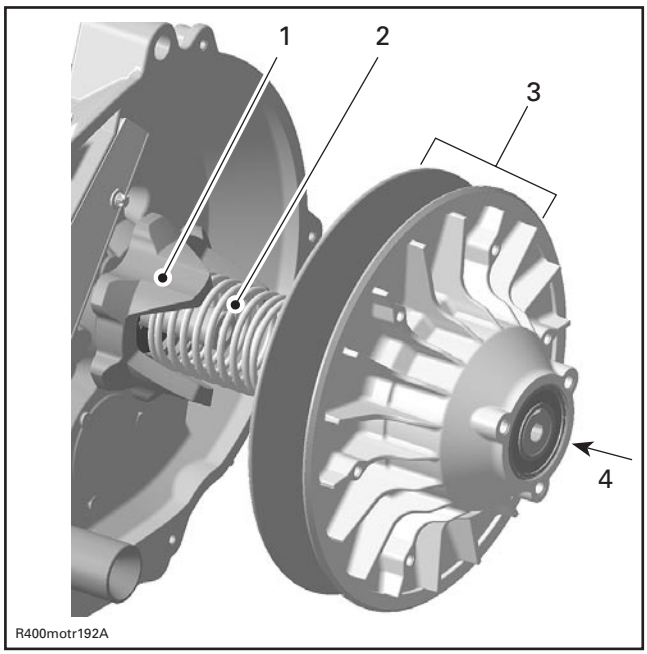

1. *Cam*
2. *Spring*
3. *Driven pulley*
4. *Location for pushing during screw installation*

Push the driven pulley by hand. Install the driven pulley screw **no. 21** and washer **no. 22**.

⚠ WARNING

Driven pulley is a spring loaded system.

CAUTION: Always place washer no. 22 at the time of driven pulley installation.

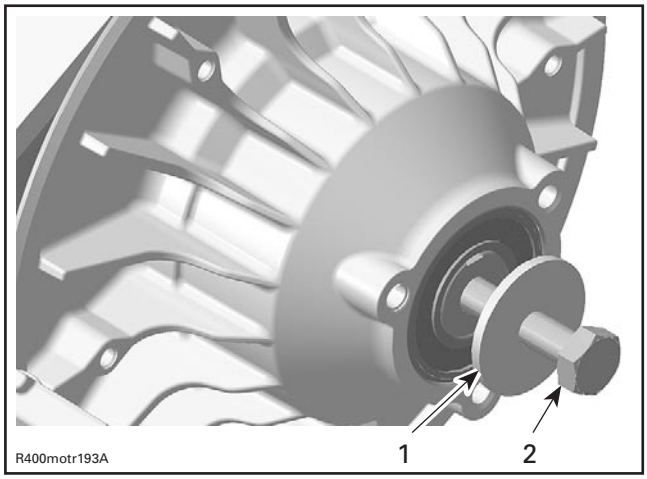

1. *Washer*
2. *Driven pulley screw*

NOTE: Driven pulley end-play is 0 (zero).

Torque driven pulley screw.

https://truckmanualshub.com/

CARBURETOR

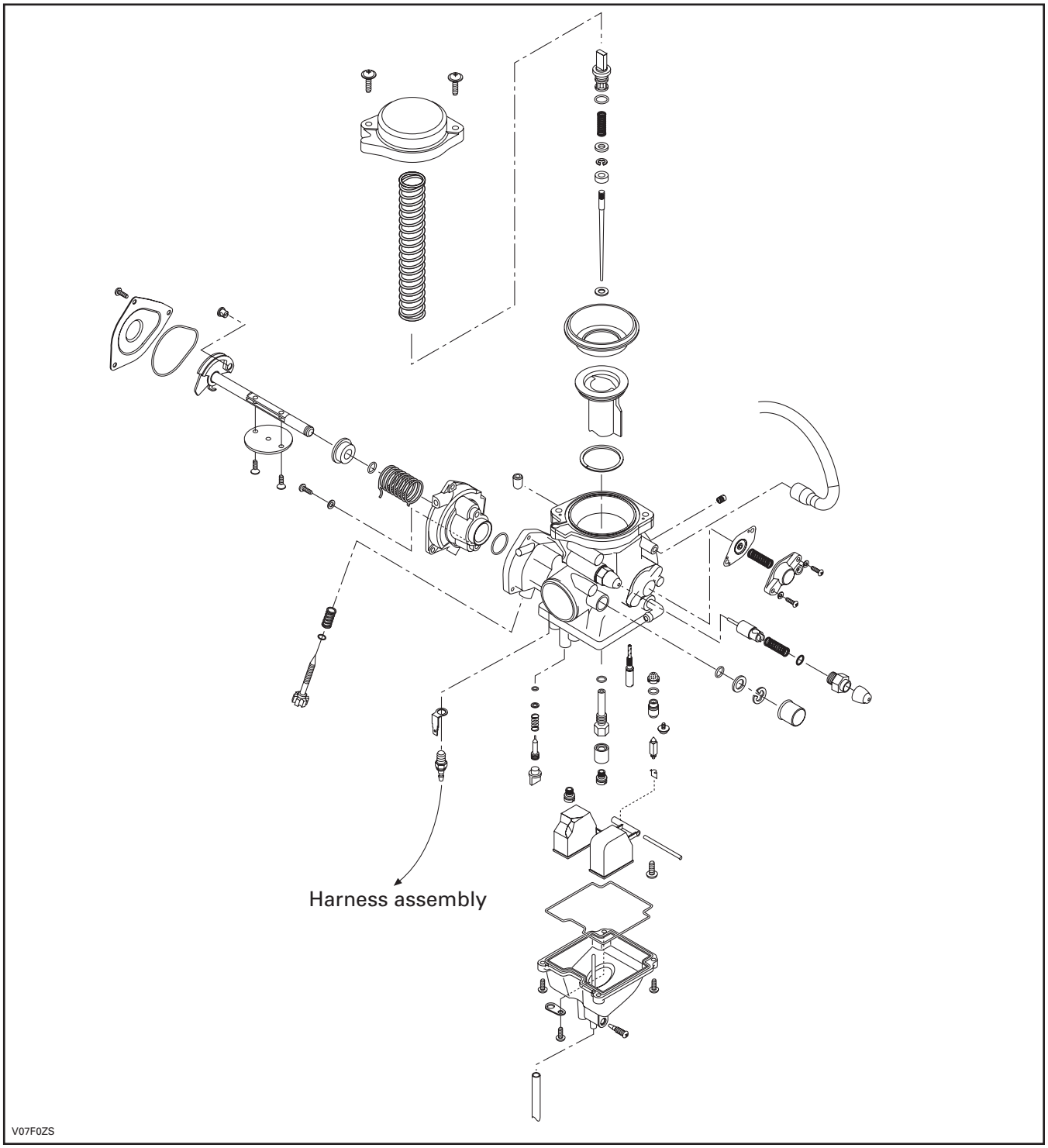

https://truckmanualshub.com/

GENERAL

Before performing any job on the fuel system, always turn fuel valve to OFF position and disconnect BLACK (-) cable from battery.

⚠ WARNING

Always disconnect battery exactly in the specified order, BLACK (-) cable first. It is recommended to disconnect electrical connections prior to disconnecting fuel lines.

CARBURETOR

CAUTION: Although some jets can be replaced by other jets from other carburetors, such modifications should not be performed. They can greatly affect engine calibration and can cause severe damage to engine. Use only recommended jetting specific for this carburetor.

Removal

Remove air filter box (refer to AIR INTAKE SILENCER).

Install hose pincher (P/N 295 000 076) on fuel pump outlet hose at carburetor.

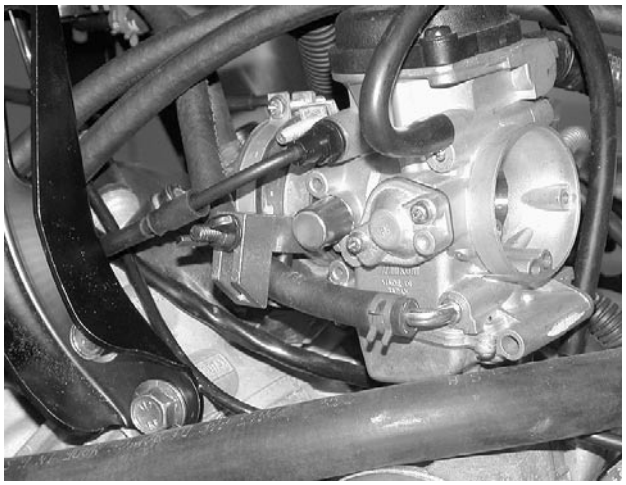

V07F05A

Drain carburetor by unscrewing the drain screw underneath.

Unplug all hoses from carburetor.

NOTE: To ease reinstallation, mark all hoses before unplugging.

Unscrew choke cable then remove the choke plunger from the throttle body.

NOTE: Take care not to drop the choke plunger. If so, check plunger for damages and replace if necessary.

On the RH side of vehicle, remove the throttle cable from carburetor. See THROTTLE CABLE further in this section.

Unscrew clamp retaining carburetor to the intake adaptor.

Pull out carburetor.

Cleaning and Inspection

The entire carburetor should be cleaned with a general solvent and dried with compressed air before disassembly.

CAUTION: Heavy duty carburetor cleaner may be harmful to the float material and to the rubber parts, O-rings, etc. Therefore, it is recommended to remove those parts prior to cleaning.

Carburetor body and jets should be cleaned in a carburetor cleaner following manufacturer's instructions.

⚠ WARNING

Solvent with a low flash point such as gasoline, naphtha, benzol, etc., should not be used as they are flammable and explosive.

Carburetor Float Level Adjustment

Correct fuel level in float chamber is vital toward maximum engine efficiency. To check for correct float level proceed as follows:

– Remove float bowl and gasket from carburetor.
– Make sure that float arm is symmetric, not distorted.

With carburetor chamber upside down:

– Measure height between bowl seat and the top edge of float arm. Use float level gauge (P/N 529 035 520).
– Keep float level gauge perfectly vertical and in line with main jet hole.

Ensure that both float level gauge tips are properly positioned on carburetor body and that "L" arm is leaning on float while compressing valve spring.

https://truckmanualshub.com/

Refer to following photos for proper float level gauge positioning and to TECHNICAL DATA for proper level.

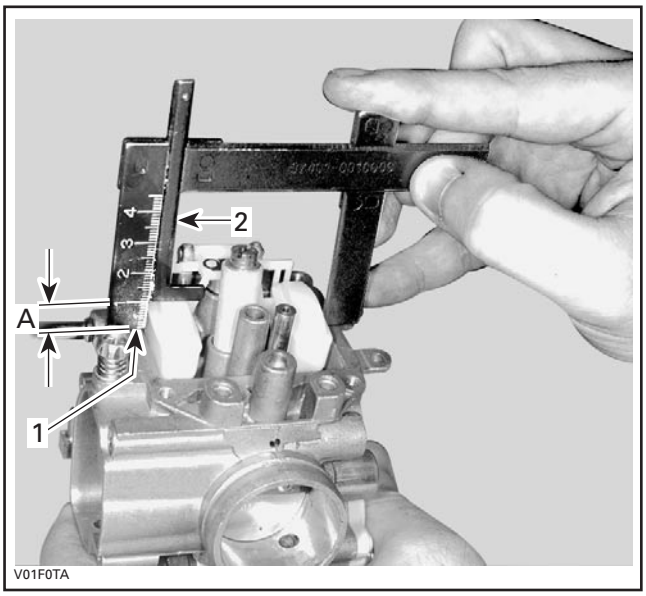

1. Gauge tips
2. "L" arm
A. Height

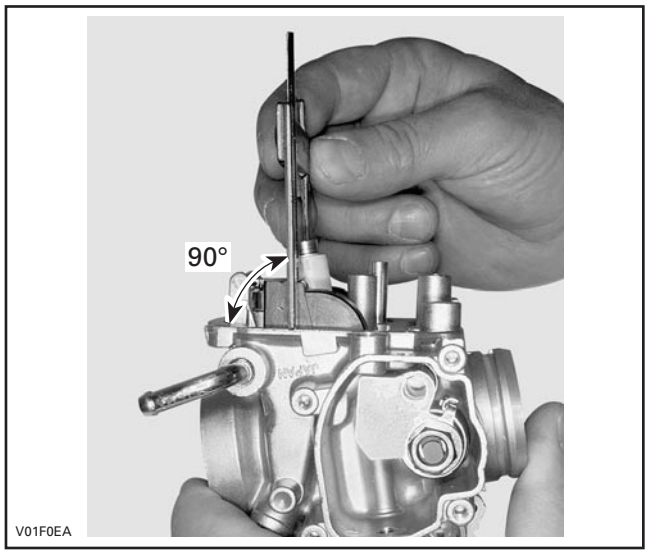

GAUGE ALIGNED WITH MAIN JET

To adjust height, bend the contact tab of float arm until the specified height is reached.

CAUTION: When adjusting lever, do not pry it. This will apply pressure on needle and damage valve seat/needle.

Installation

To install carburetor on engine, inverse removal procedure. Pay attention to the following details:

- Inspect throttle and choke cable housing prior to installation.
- Reinstall throttle and choke cables, at the same time adjust the throttle cable, then install the side cover. Refer to CARBURETOR ADJUSTMENTS below in this section.
- Reinstall carburetor on vehicle.

When reinstalling carburetor on vehicle, pay attention to the following:

CAUTION: The rubber flanges must be checked for cracks and/or damage. At assembly, the rubber flanges must be perfectly matched with the air box, carburetor and engine or severe engine damage will occur. Do not use screwdriver or other tool to install the rubber flanges.

Make sure rubber flange recess is aligned with intake adaptor notch.

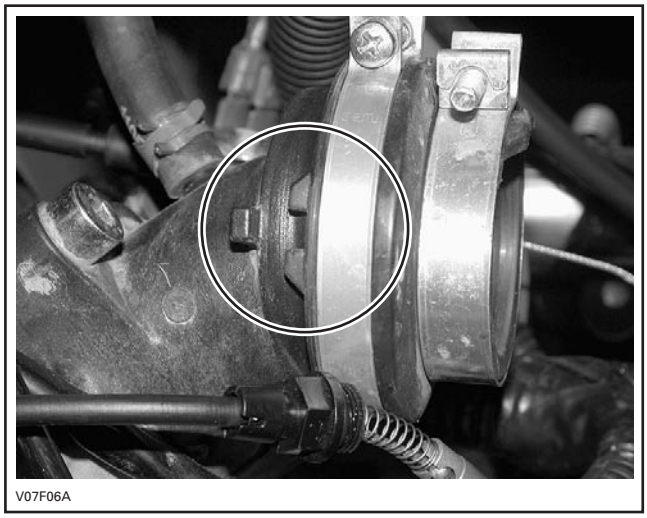

TYPICAL

Install clamps so that their tightening bolts are staggered — not aligned.

https://truckmanualshub.com/

Align carburetor notch with the flange recess.

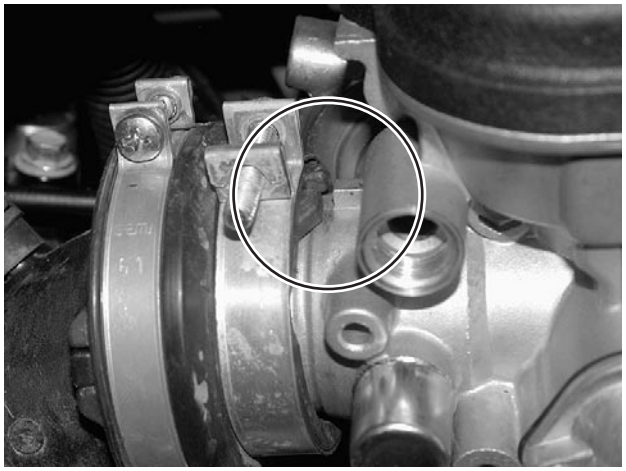

TYPICAL
Carburetor notch aligned with the flange recess

Install air filter box.

Carburetor Adjustments

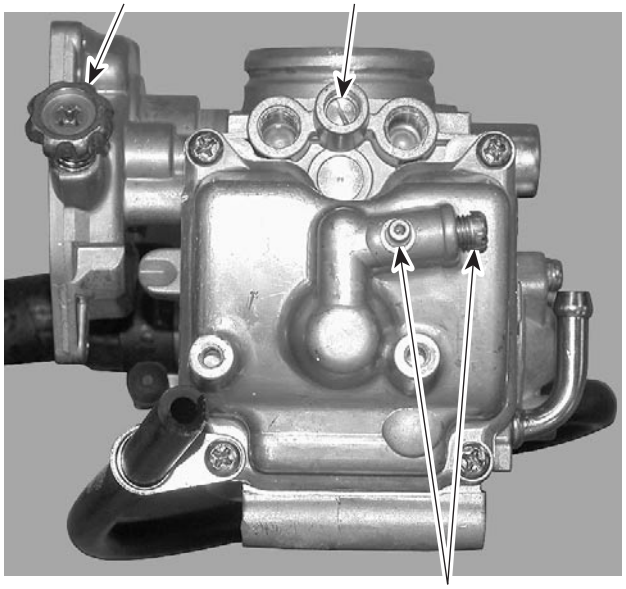

BOTTOM VIEW

1. *Idle speed screw*
2. *Pilot screw*
3. *Drain plug and screw*

Idle Speed Preliminary Adjustment

Adjust throttle screw to 1-1/2 turn or so that throttle valve closes bypass hole by half, as shown in the next photo.

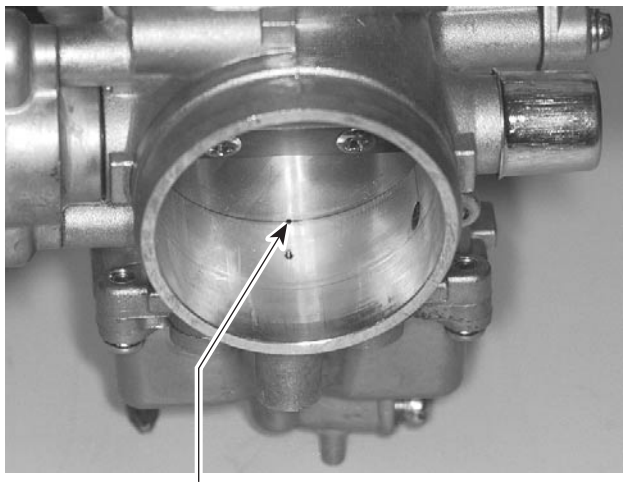

1. *Bypass hole closes to halfway*

Idle Speed Adjustment

Start engine and allow it to warm then adjust idle speed to specifications by turning **idle speed screw** clockwise to increase engine speed or counterclockwise to decrease it.

NOTE: Use the digital induction tachometer (P/N 529 014 500). Turn tachometer wire around spark plug wire, about 4 or 5 turns, for the best measure.

CAUTION: Do not attempt to set the idle speed by using the pilot screw.

Refer to TECHNICAL DATA for idle speed specifications.

Pilot Screw Adjustment

NOTE: The pilot screw is factory pre-set. Warm the engine to operating temperature.

Turn the pilot screw clockwise until you hear the engine missing or decreasing idle speed, then turn counterclockwise until the engine again misses or decreases idle speed.

Center the pilot screw exactly between these two extreme positions then unscrew the pilot screw of 3/8 turn.

If idle speed changes after adjustment of the pilot screw, readjust the idle speed screw.

https://truckmanualshub.com/

Diaphragm Installation

Carefully replace diaphragm in its original position.

Make sure spring is located properly in carburetor cover before screwing.

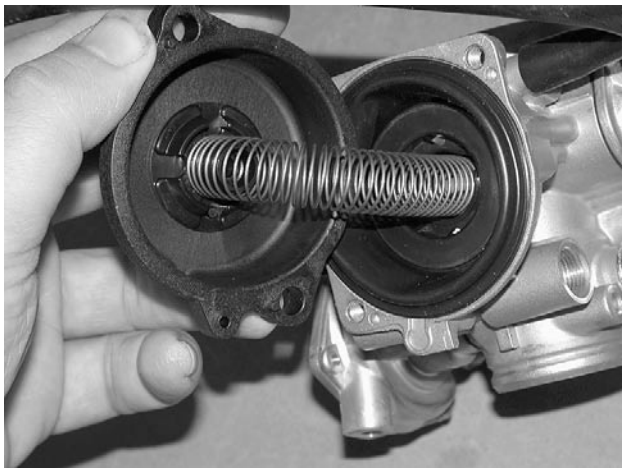

V07F09A

THROTTLE CABLE

Removal

Carburetor Side

⚠ WARNING

Ensure the key is turned OFF, prior to performing the throttle cable adjustment.

NOTE: To ease reinstallation, take note the cable routing.

Remove carburetor side cover.

Using thumb, release tension on throttle lever. With long nose pliers, rotate cable end bushing so that cable aligns with throttle lever recess, then lift cable end. See next photo.

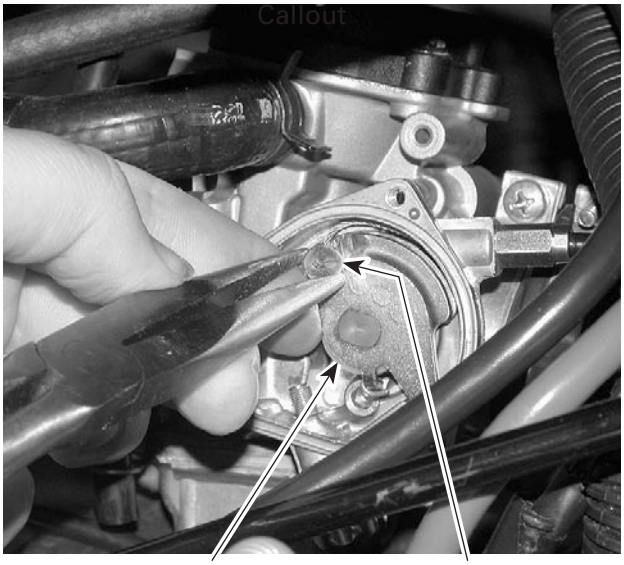

V07F0AA

1. *Release tension on throttle lever*
2. *Cable end bushing*

Separate cable end bushing from throttle cable end, as shown in the next photo. Keep bushing.

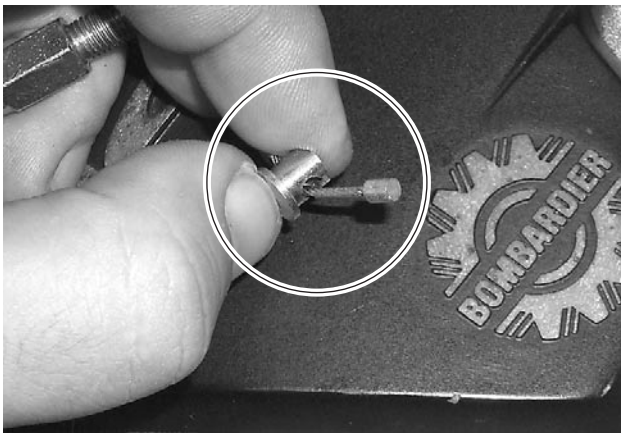

V04F0UA

REMOVE CABLE END BUSHING

https://truckmanualshub.com/

Loosen throttle cable nut, as shown in the next photo.

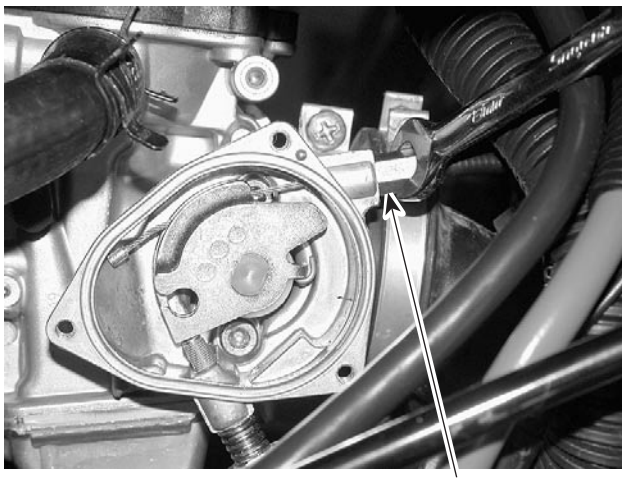

1. Loosen this nut

Pull cable out from carburetor.

Throttle Lever Side

Remove screws under throttle lever then open it.

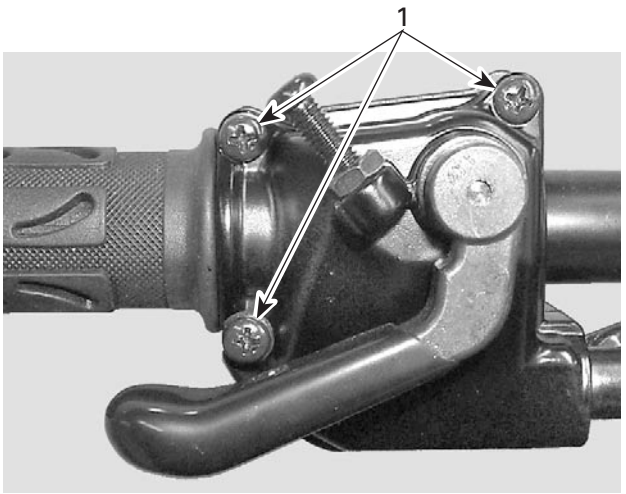

1. Remove these screws

Separate housing. Slide rubber protector back to expose throttle cable adjuster.

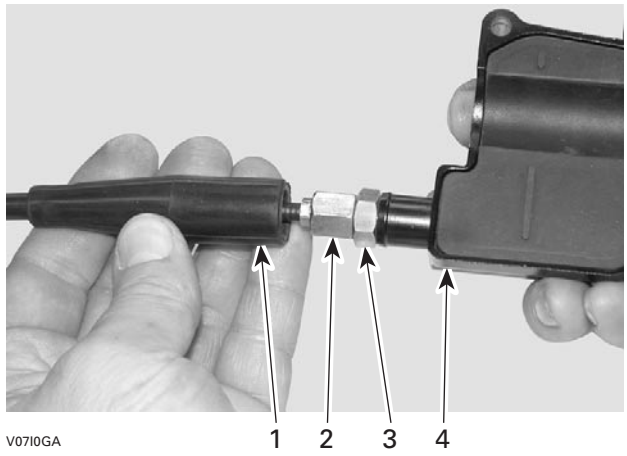

1. Cable protector
2. Throttle cable adjuster
3. Lock nut
4. Throttle lever housing

Screw in the throttle cable adjuster.

Remove:

– inner housing protector

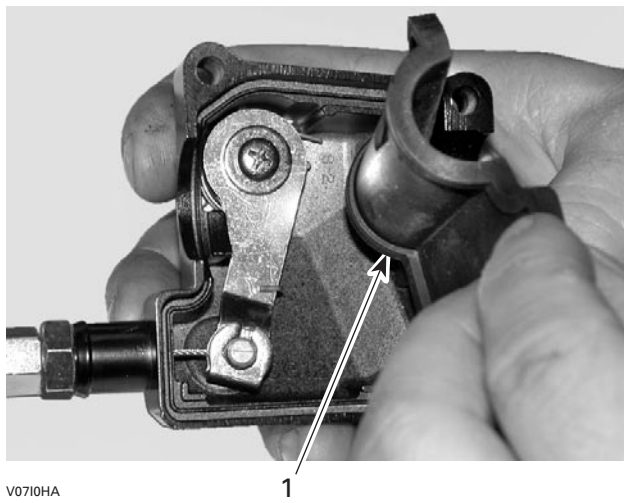

1. Inner housing protector

– throttle cable from housing.

Slide cable in clip slot and remove the end of cable from clip.

https://truckmanualshub.com/

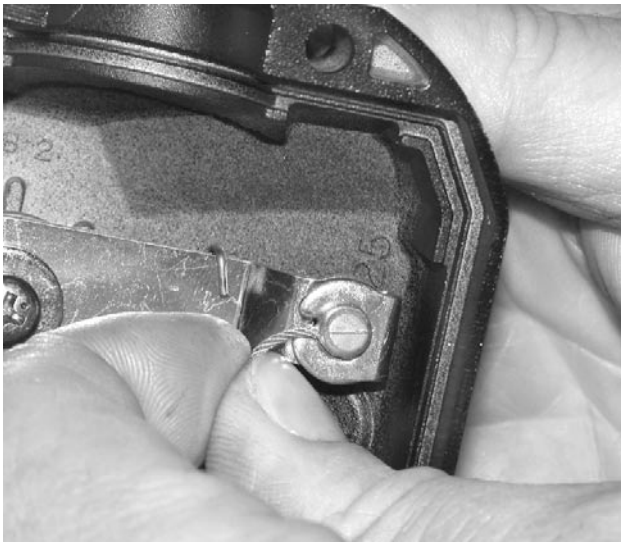

V07I0IA

Lubrication

The throttle cable must be lubricated with Bombardier cable lubricant (P/N 293 600 041) only.

⚠ WARNING

Using another lubricant could cause sticking or stiffness of throttle lever/cable.

To lubricate the throttle cable, remove cable from throttle lever side.

Slide rubber protector to expose throttle cable adjuster.

Remove carburetor side cover.

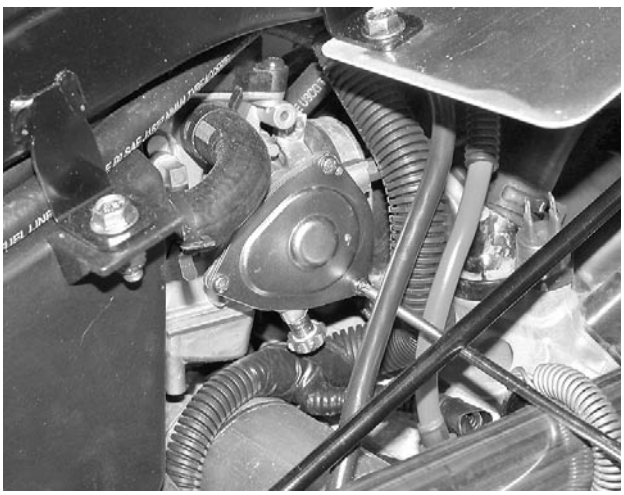

V07F04A

Insert the needle of lubricant can in the end of throttle cable adjuster.

⚠ WARNING

Always wear eye protection and gloves when lubricating cables.

NOTE: Place a rag around cable adjuster to prevent lubricant splash.

V07I0JA

Put lubricant until it passes through the cable.

Clean lubricant surplus in carburetor housing.

Spray lubricant inside throttle housing.

Reinstall carburetor cover and cable in throttle housing.

Adjust cable; see below.

Installation

For installation, reverse the removal procedure.

Adjustment

⚠ WARNING

Ensure the key is turned OFF, prior to perform the throttle cable adjustment.

Slide rubber protector back to expose throttle cable adjuster.

Loosen lock nut then turn the adjuster to obtain correct throttle lever free play.

NOTE: Measure throttle free play at the tip of throttle lever.

Tighten lock nut and reinstall protector.

https://truckmanualshub.com/

With the transmission lever on PARK position, start engine. Check if the throttle cable is adjusted correctly by turning handlebar fully right then fully left. If the engine RPM increase, readjust the throttle lever free play.

CHOKE CABLE

Removal

NOTE: To ease reinstallation, take note of cable routing.

Carburetor Side

Remove the LH side panel and the air filter box.

Unscrew choke plastic nut from carburetor.

Pull choke cable to remove choke plunger from carburetor.

Remove the choke plunger and its spring.

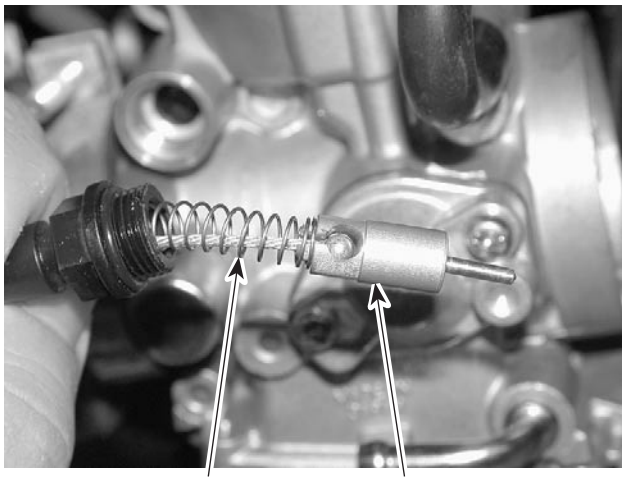

1. *Choke plunger*
2. *Choke plunger spring*

Handlebar Side

Push the choke lever on FULL position.

Underneath multi-function switch, align the choke cable end with the lever slot then remove the cable.

Remove the retaining spring to remove the choke cable from housing.

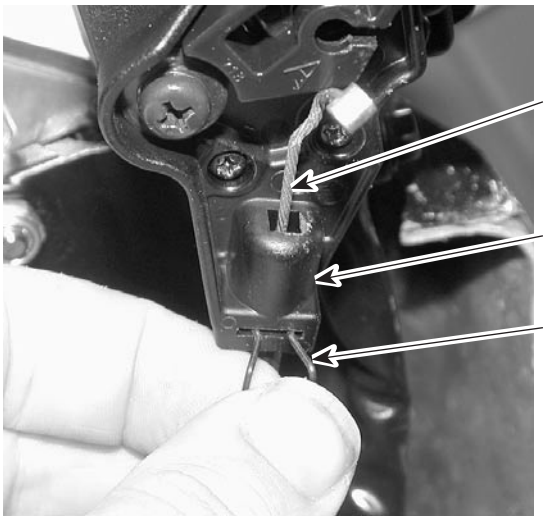

1. *Retaining spring*
2. *Choke cable*
3. *Choke cable housing*

Installation

The installation is the reverse of removal procedure.

https://truckmanualshub.com/

CHARGING SYSTEM

TESTING PROCEDURE

NOTE: First, ensure that battery is in good condition prior to performing the following test using a current inductive ammeter such as Snap-on MT 110.

If the battery is regularly discharged, check main fuse (20 amp) condition.

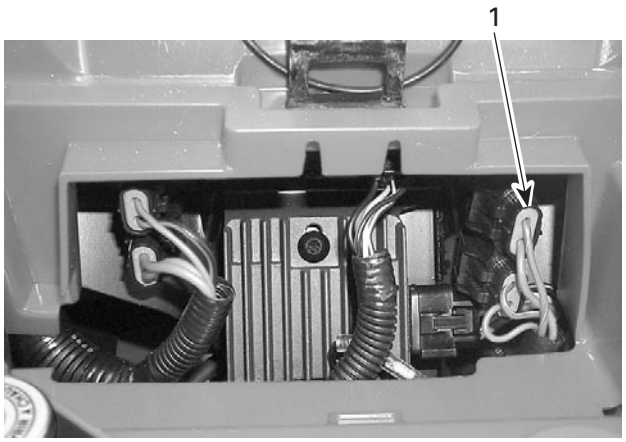

1. Main fuse

The voltage regulator/rectifier could be the culprit of a blown fuse. To check, simply disconnect the voltage regulator/rectifier from the circuit.

If the fuse still burns, check for a defective wire.

CAUTION: Do not use a higher rated fuse as this can cause severe damage.

Voltage Regulator/Rectifier

STATIC TEST: CONTINUITY

1. Due to internal circuitry, there is no static test available.

DYNAMIC TEST

Current Test

Proceed as follows:

– Start engine.

– Lay an inductive ammeter on positive cable of battery.

– Bring engine to approximately 3500 RPM.

Depending on battery charge, current reading should be approximately **5 amperes**. If not, check magneto output prior to concluding that voltage regulator/rectifier is faulty.

Voltage Test

Proceed as follows:

– Start engine.

– Connect a multimeter to battery posts. Set multimeter to Vdc scale.

– Bring engine to approximately 3500 RPM.

If multimeter reads over 15.1 ± 0.5 volts, voltage regulator/rectifier is defective. Replace it.

NOTE: Whatever the voltmeter type used (peak voltage or RMS), the voltage must not exceed 15 V. A faulty voltage regulator/rectifier will allow voltage to exceed 15 V as engine speed is increased.

NOTE: If the battery will not stay charged, the problem can be any of the charging circuit components. If these all check good, you would be accurate in assuming the problem to be in the voltage regulator/rectifier.

If there is no charging at the battery with the preceding voltage test, the following test can also be performed.

NOTE: If the voltage regulator/rectifier is within the specification, the wiring harness between the voltage regulator/rectifier and battery is defective. If the voltage regulator/rectifier is out of specification and the stator tests good, the voltage regulator/rectifier is defective.

https://truckmanualshub.com/

Stator

STATIC TEST: CONTINUITY

1. Disconnect the magneto wiring harness connector. With the recommended multimeter, place the 2 meter test probes onto the stator wire leads AC-1 and AC-2 of the stator. The resistance should be between 0.1 Ω and 1.0 Ω.

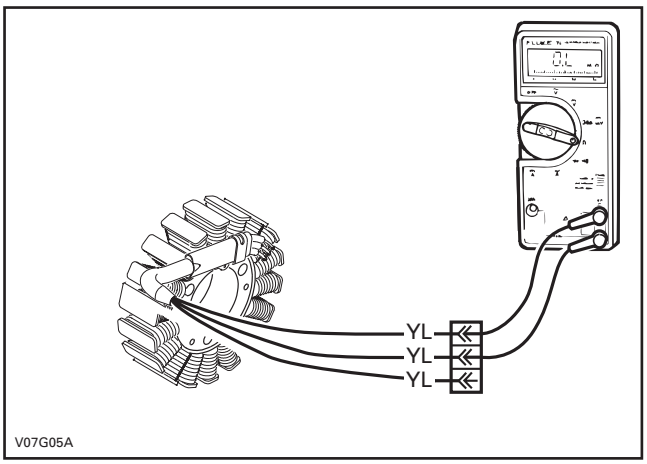

TYPICAL

2. Place either meter test probe into the remaining stator lead (AC-3) and note the resistance (same as step no. 1). If the readings are out of specification, the stator will need to be replaced.

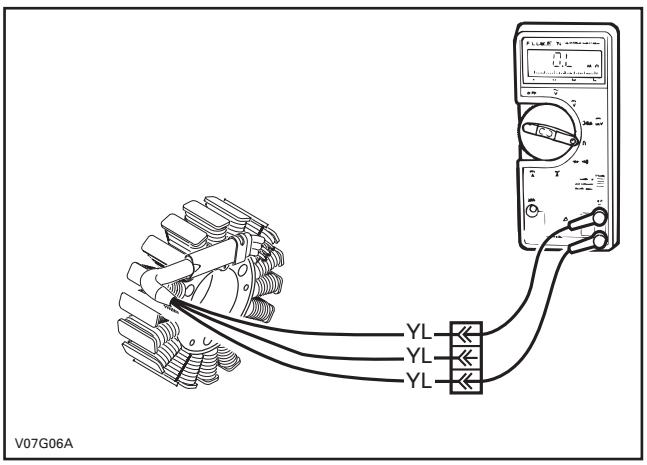

TYPICAL

STATIC TEST: INSULATION

With the stator leads disconnected, insert either meter test probe onto AC-1 and ground the other meter test probe to the engine or the stator iron core and note the reading. There should be no continuity (infinity) between the stator insulated coils and ground. If there is a reading, the stator coils and/or the wiring from the coils is grounded and needs to be replaced/repaired respectively.

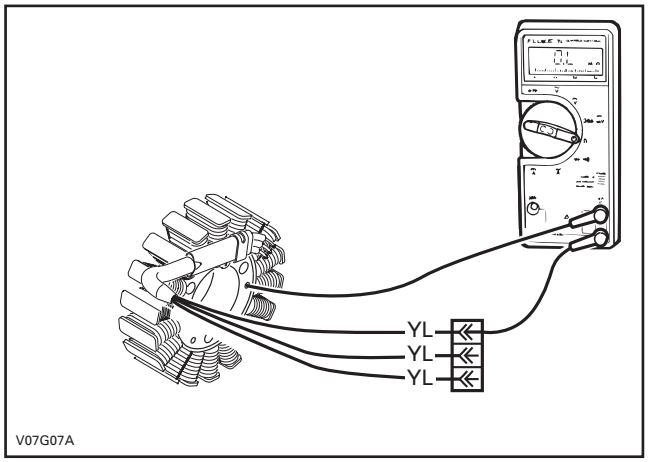

TYPICAL

DYNAMIC TEST

1. Unplug magneto wiring harness connector.
2. On magneto side, connect test probes of the multimeter to two of the YELLOW wires.
3. Set multimeter to Vac scale.
4. Start engine. The obtained value should be between 10 and 12 Vac.
5. Repeat operation 3 times.
6. If the stator is out of specification, replace it.

https://truckmanualshub.com/

TECHNICAL DATA

SI* METRIC INFORMATION GUIDE

BASE UNITS

DESCRIPTION	UNIT	SYMBOL
length	meter	m
mass	kilogram	kg
force	newton	N
liquid	liter	L
temperature	Celsius	°C
pressure	kilo pascal	kPa
torque	newton•meter	N•m
speed	kilometer per hour	km/h

PREFIXES

PREFIX	SYMBOL	MEANING	VALUE
kilo	k	one thousand	1 000
centi	c	one hundredth	0.01
milli	m	one thousandth	0.001
micro	µ	one millionth	0.000001

CONVERSION FACTORS

TO CONVERT	TO †	MULTIPLY BY
in	mm	25.4
in	cm	2.54
in^2	cm^2	6.45
in^3	cm^3	16.39
ft	m	0.3
oz	g	28.35
lb	kg	0.45
lbf	N	4.4
lbf•**in**	N•m	0.11
lbf•ft	N•m	1.36
lbf•ft	lbf•**in**	12
PSI (lbf/in^2)	kPa	6.89
imp. oz	U.S. oz	0.96
imp. oz	mL	28.41
imp. gal	U.S. gal	1.2
imp. gal	L	4.55
U.S. oz	mL	29.57
U.S. gal	L	3.79
MPH	km/h	1.61
Fahrenheit	Celsius	(°F - 32) ÷ 1.8
Celsius	Fahrenheit	(°C x 1.8) + 32

* The international system of units abbreviates SI in all languages.

† To obtain the inverse sequence, divide by the given factor. To convert ''mm'' to ''in'', divide by 25.4.

NOTE: Conversion factors are rounded off to 2 decimals for easier use.

https://truckmanualshub.com/

https://truckmanualshub.com/

ENGINE				
Engine type				ROTAX, 4-stroke, Over Head Camshaft (OHC), liquid cooled
Starting system				Electric start
Number of cylinder(s)				1
Number of valves				4 valves (mechanical adjustment)
Decompressor type				Automatic
Bore		Standard	mm (in)	91 (3.58)
Stroke			mm (in)	61.5 (2.42)
Displacement			cm^3 (in^3)	400 (24.41)
Compression ratio				10.3:1
Lubrication				Wet sump with replaceable oil filter
Oil filter				BOMBARDIER-ROTAX
Air filter type				2 stage foam filter
Exhaust system		Type		Nelson, steel
		Spark arrester		USDA Forest Service approved
Intake valve opening				15.00° BTDC
Intake valve closing				45.00° ABDC
Exhaust valve opening				50.00° BBDC
Exhaust valve closing				10.00° ATDC
Chain tensioner plunger protrusion		Wear limit	mm (in)	20.0 (.7874)
Valve clearance	Intake		mm (in)	0.06 (.0024) to 0.14 (.0055)
	Exhaust		mm (in)	0.11 (.0043) to 0.19 (.0075)
Valve/valve stem clearance	Intake	New minimum	mm (in)	4.966 (.1955)
		New maximum	mm (in)	4.980 (.1960)
		Wear limit	mm (in)	4.930 (.1940)
	Exhaust	New minimum	mm (in)	4.956 (.1951)
		New maximum	mm (in)	4.970 (.1957)
		Wear limit	mm (in)	4.930 (.1940)
Valve guide diameter		New minimum	mm (in)	5.006 (.1971)
		New maximum	mm (in)	5.018 (.1976)
		Wear limit	mm (in)	5.050 (.1988)
Valve spring free length		New nominal	mm (in)	40.81 (1.607)
		Service limit	mm (in)	39.00 (1.535)
Valve seat contact width	Intake	New	mm (in)	1.15 to 1.35 (.045 to .053)
		Wear limit	mm (in)	1.8 (.07)
	Exhaust	New	mm (in)	1.25 to 1.55 (.049 to .061)
		Wear limit	mm (in)	2 (.078)
Piston measurement		New nominal	mm (in)	90.950 to 90.966 (3.580 to 3.581)
Piston/cylinder clearance		New nominal	mm (in)	0.027 to 0.057 (.0011 to .0022)
		Wear limit	mm (in)	0.1 (.004)
Piston ring type		Upper compression ring		Rectangular
		Lower compression ring		Taper-face
		Oil scraper ring		Standard

https://truckmanualshub.com/

ENGINE				
Piston ring end gap	Upper compression ring	New minimum	mm (in)	0.2 (.008)
	Lower compression ring		mm (in)	0.2 (.008)
	Oil scraper ring		mm (in)	0.2 (.008)
	Upper compression ring	New maximum	mm (in)	0.40 (.016)
	Lower compression ring		mm (in)	0.40 (.016)
	Oil scraper ring		mm (in)	0.70 (.028)
	All	Wear limit	mm (in)	1.5 (.06)
Piston/ring groove clearance	Upper compression ring	New minimum	mm (in)	0.030 (.0012)
	Lower compression ring		mm (in)	0.020 (.0008)
	Oil scraper ring		mm (in)	0.010 (.0004)
	Upper compression ring	New maximum	mm (in)	0.070 (.0028)
	Lower compression ring		mm (in)	0.060 (.0024)
	Oil scraper ring		mm (in)	0.045 (.0018)
	All	Wear limit	mm (in)	0.15 (.006)
Rocker arm bore diameter		New minimum	mm (in)	12.036 (.4739)
		New maximum	mm (in)	12.050 (.4744)
		Wear limit	mm (in)	12.060 (.4748)
Rocker arm shaft diameter		New minimum	mm (in)	12.007 (.4727)
		New maximum	mm (in)	12.018 (.4732)
		Wear limit	mm (in)	11.990 (.4720)
Cylinder bore		New nominal	mm (in)	90.993 to 91.007 (3.582 to 3.583)
Cylinder taper		New maximum	mm (in)	0.038 (.001)
		Wear limit	mm (in)	0.090 (.004)
Cylinder out of round		New maximum	mm (in)	0.015 (.0006)
		Wear limit	mm (in)	0.02 (.0008)
Camshaft bearing journal	PTO side	New minimum	mm (in)	21.959 (.8645)
		New maximum	mm (in)	21.980 (.8654)
		Wear limit	mm (in)	21.950 (.8642)
	Magneto side	New minimum	mm (in)	34.959 (1.3763)
		New maximum	mm (in)	34.975 (1.3770)
		Wear limit	mm (in)	34.950 (1.3760)
Camshaft bore	PTO side	New minimum	mm (in)	22.000 (.8661)
		New maximum	mm (in)	22.021 (.8670)
		Wear limit	mm (in)	22.040 (.8677)
	Magneto side	New minimum	mm (in)	35.000 (1.3780)
		New maximum	mm (in)	35.025 (1.3789)
		Wear limit	mm (in)	35.040 (1.3795)
Cam lobe	Intake	New minimum	mm (in)	32.343 (1.2733)
		New maximum	mm (in)	32.363 (1.2741)
		Wear limit	mm (in)	32.300 (1.2717)
	Exhaust	New minimum	mm (in)	32.027 (1.2609)
		New maximum	mm (in)	32.047 (1.2617)
		Wear limit	mm (in)	32.000 (1.2598)
Crankshaft axial clearance		New minimum	mm (in)	0.1 (.0039)
Crankshaft deflection	MAG side	New nominal	mm (in)	0.05 (.0020)
	PTO side	New nominal	mm (in)	0.05 (.0020)
Crankshaft pin diameter		New minimum	mm (in)	40.009 (1.5752)
		New maximum	mm (in)	40.025 (1.5758)
		Wear limit	mm (in)	39.980 (1.5740)
Crankshaft journal diameter	MAG/PTO side	New minimum	mm (in)	42.024 (1.6545)
		New maximum	mm (in)	42.040 (1.6551)
		Wear limit	mm (in)	42.000 (1.6535)

https://truckmanualshub.com/

ENGINE				
Crankcase plain bearing	MAG side	Wear limit	mm (in)	42.070 (1.6563)
	PTO side	Wear limit	mm (in)	42.070 (1.6563)
Crankshaft radial clearance	MAG/PTO side	Service limit	mm (in)	0.07 (.0028)
Connecting rod big end diameter		New minimum	mm (in)	40.020 (1.5756)
		New maximum	mm (in)	40.051 (1.5768)
		Service limit	mm (in)	40.100 (1.5787)
Connecting rod big end clearance		Service limit	mm (in)	0.09 (.0035)
Connecting rod big end axial play		New minimum	mm (in)	0.100 (.004)
		New maximum	mm (in)	0.352 (.014)
		Wear limit	mm (in)	0.5 (.02)
Connecting rod small end diameter		New minimum	mm (in)	20.01 (.7878)
		New maximum	mm (in)	20.02 (.7882)
		Wear limit	mm (in)	20.06 (.7898)
Piston pin diameter		New minimum	mm (in)	19.996 (.7872)
		New maximum	mm (in)	20.000 (.7874)
		Wear limit	mm (in)	19.980 (.7867)
Piston pin bore clearance		Wear limit	mm (in)	0.080 (.0035)
Drive belt		New nominal	mm (in)	32.00 (1.260)
		Service limit	mm (in)	30.00 (1.181)
Governor cup roller diameter		New minimum	mm (in)	13.70 (.539)
		New maximum	mm (in)	13.90 (.547)
		Service limit	mm (in)	13.20 (.519)
Centrifugal lever pivot bolt diameter		New minimum	mm (in)	6.078 (.239)
		New maximum	mm (in)	6.100 (.240)
		Service limit	mm (in)	6.000 (.236)
Centrifugal lever bore diameter		Service limit	mm (in)	6.200 (.244)
Centrifugal lever pivot bolt bore diameter		New minimum	mm (in)	6.113 (.241)
		New maximum	mm (in)	6.171 (.243)
		Service limit	mm (in)	6.300 (.248)
Drive pulley sliding half large bushing		New minimum	mm (in)	55.000 (2.165)
		New maximum	mm (in)	55.020 (2.166)
		Service limit	mm (in)	55.200 (2.173)
Drive pulley sliding half small bushing		New minimum	mm (in)	30.000 (1.181)
		New maximum	mm (in)	30.020 (1.182)
		Service limit	mm (in)	30.200 (1.189)
One-way clutch bushing diameter		New minimum	mm (in)	39.990 (1.574)
		New maximum	mm (in)	40.085 (1.578)
		Service limit	mm (in)	40.100 (1.579)
Driven pulley sliding half busing diameter		New minimum	mm (in)	30.000 (1.181)
		New maximum	mm (in)	30.020 (1.182)
		Service limit	mm (in)	30.200 (1.189)
Driven pulley fixed half busing diameter		New minimum	mm (in)	30.000 (1.181)
		New maximum	mm (in)	30.020 (1.182)
		Service limit	mm (in)	30.200 (1.189)
Torque gear on driven pulley		Service limit	mm (in)	7.500 (.295)
Main shaft		MAG side	mm (in)	17.990 (.708)
		PTO side	mm (in)	24.950 (.982)
Bevel gear shaft		PTO side	mm (in)	24.990 (.984)

https://truckmanualshub.com/

ELECTRICAL			
Magneto/generator			400 W @ 6000 RPM
Ignition system type			C.D.I. (Capacitive Discharge Ignition)
Ignition timing			Not adjustable
Spark plug	Quantity		1
	Make and type		NGK DCPR8E
	Gap	mm (in)	0.7 to 0.8 (.028 to .032)
CPS (Crankshaft Position Sensor)		Ω	190 – 300
Starter coil		Ω	0.4 ± 01 @ 20°C (68°F)
Ignition coil	Primary	Ω	1.0 ± 0.15 @ 20°C (68°F)
	Secondary	kΩ	11.5 ± 2.3 @ 20°C (68°F)
Engine RPM limiter		RPM	8000
		RPM	
Battery			
	Voltage		12 volts
	Nominal rating		47 A•h
	Power starter output		1.2 KW
CARBURETION			
Carburetor	Type		Mikuni constant depression type with manual choke and ECS (Enrichner Coasting System)
	Model		BSR33
Fuel pump	Type		Mikuni (Pulsation pump)
	Model		External (vacuum-operated)
Idle engine speed		RPM	1300 ± 100
Main jet			130
Pilot jet			32.5
Needle jet			(826) P-4
Jet needle			5 FEY 1
Clip position number			3
Choke plunger position			Variable choke
Adjustment	Throttle cable		0.5 mm (.02 in)
	Preliminary pilot screw turn		2.5
	Float level	± 0.5 mm	10.0
		± 0.020 in	.390
Fuel	Type		Regular unleaded gasoline
	Octane no.		87 (Ron + Mon)/2
COOLING			
Coolant			Ethyl glycol/water mix (50% coolant, 50% water). Use coolant specifically designed for aluminum engines
Fan			Thermostatic
Coolant temperature switch	Operating temperature		115°C (239°F)
	Closing temperature		110°C (230°F)
Fan thermostat	Switch ON		95°C (203°F)
	Switch OFF		90°C (194°F)
Engine thermostat	Opening temperature		65°C (149°F)
	Closing temperature		75°C (167°F)

https://truckmanualshub.com/

VEHICLE MODEL		OUTLANDER™ 400 H.O.		
		2 X 4	4 X 4	XT
LUBRICATION				
Oil pressure switch operation		30 to 60 kPa (4.35 to 8.70 PSI)		
Engine oil pressure (min.)		350 kPa (51 PSI)		
DRIVE TRAIN				
Transmission	Type	CVT (Continuously Variable Transmission). Dual range (HI-LO) with park, neutral and reverse		
Engagement RPM	± 100 RPM	1450		

https://truckmanualshub.com/

			SERVICE PRODUCT
TORQUE			
• *ENGINE*			
			None
Spark plug		20 N•m (15 lbf•ft)	
Oil filter screw		10 N•m (89 lbf•**in**)	
Magneto cover bolts	M6	10 N•m (89 lbf•**in**)	
	M8	25 N•m (18 lbf•ft)	
Starter bolts		10 N•m (89 lbf•**in**)	
Vehicle speed sensor		10 N•m (89 lbf•**in**)	
CPS bolt		10 N•m (89 lbf•**in**)	
Engine cover		5 N•m (44 lbf•**in**)	
Starter RED (+) cable		6 N•m (53 lbf•**in**)	Dielectric grease
Rotor nut		180 N•m (133 lbf•ft)	Loctite 243
Stator bolt		10 N•m (89 lbf•**in**)	
• *COOLING*			
			None
Thermostat housing		7 N•m (62 lbf•**in**)	
Thermostat bleeding screw		5 N•m (44 lbf•**in**)	
Temperature sensor		17 N•m (151 lbf•**in**)	
Water pump housing		10 N•m (89 lbf•**in**)	
• *EXHAUST*			
Exhaust nut		11 N•m (97 lbf•**in**)	None
• *LUBRICATION*			
Engine drain plug		30 N•m (22 lbf•ft)	None
Engine oil strainer cover		10 N•m (89 lbf•**in**)	
Oil pump housing		10 N•m (89 lbf•**in**)	
Oil pressure regulator plug		11 N•m (97 lbf•**in**)	
Oil pressure switch		12 N•m (106 lbf•**in**)	Loctite 243
• *CYLINDER AND HEAD*			
Valve cover		7 N•m (62 lbf•**in**)	None
Cylinder head screw	M6	10 N•m (89 lbf•**in**)	
	M11	First torque 20 N•m (15 lbf•ft) Final torque 60 N•m (44 lbf•ft)	
Intake adaptor		25 N•m (18 lbf•ft)	
Camshaft timing gear		25 N•m (18 lbf•ft)	Loctite 243
Chain guide		10 N•m (89 lbf•**in**)	
Chain tensioner housing		8 N•m (71 lbf•**in**)	
Chain tensioner plug		4.5 N•m (40 lbf•**in**)	None

https://truckmanualshub.com/

			SERVICE PRODUCT
TORQUE			
• *CRANKSHAFT*			
Crankcase housing screw	M6	10 N•m (89 lbf•**in**)	None
	M8	25 N•m (18 lbf•ft)	
Connecting rod		20 N•m (15 lbf•ft) + 70° rotation	
Crankshaft locking access screw		25 N•m (18 lbf•ft)	
• *GEARBOX*			
Bearing screw		10 N•m (89 lbf•**in**)	Loctite 243
Index lever		10 N•m (89 lbf•**in**)	
Starter drive pinion cover		8 N•m (71 lbf•**in**)	
Shifting indicator switch		4 N•m (35 lbf•**in**)	
• *CVT*			
CVT cover		7 N•m (62 lbf•**in**)	None
Centrifugal lever bolt		5 N•m (44 lbf•**in**)	
Drive pulley		100 N•m (74 lbf•ft), refer to CVT section for proper procedure	
Driven pulley		60 N•m (44 lbf•ft)	
• *FUEL*			
Carburetor mounting clamp		2.5 N•m (22 lbf•**in**)	None
Fuel pump screw		5.5 N•m (49 lbf•**in**)	
Fuel valve nut		10 N•m (89 lbf•**in**)	

https://truckmanualshub.com/

AUSA