https://truckmanualshub.com/

Soosung

Product Catalogue

SOOSUNG LIFT MFG. CO., LTD.

https://truckmanualshub.com/

Soosung

Lift Your Dream

Technology · Quality · Trust

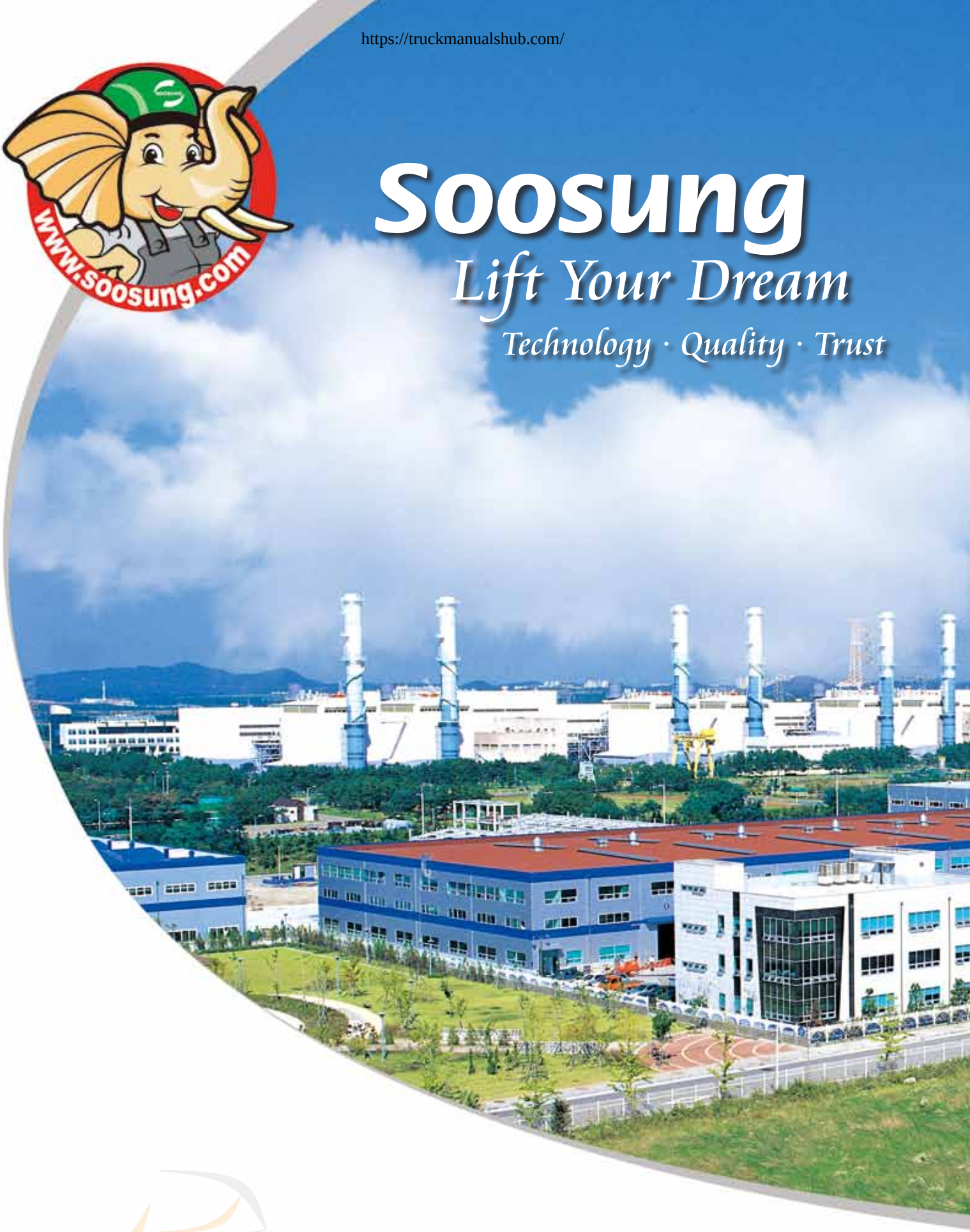

SOOSUNG

https://truckmanualshub.com/

Contents

Total Moving System

Electric Forklift Truck (SBF-A Series) 4
Electric Forklift Stand Up Type (SBR Series) 6
Electric Forklift Truck-Walkie Reach Type (SWR Series) 7
Electric Forklift Truck Walkie Type (SWC / SWS Series) 8
Electric Pallet Truck (SWP-1300 Series) 9
Electric Pallet Truck (SWP-2000 Series) 10
Electric Pallet Truck (SWP 2500 / 3000 Series) 11
Electric Rider Pallet Mover / Hand Pallet Truck (SRP Series / SHP Series) 12
Electric Tow Tractor (STT / SCT Series) 13
Electric Tow Tractor (SST Series) 14
Electric Platform Truck (SPT Series) 15
Hydraulic Stacker / Electric DC Stacker (SFH Series / SFE Series) 16
Drum Handling Equipment (SDL-300 Series / SDP-300F Series) 17
Electric Self-Propelled Elevating Work Platform (SSL Series) 18

Total Cleaning System

Industrial Scrubber & Sweeper (S1100R / S860R) 20
Industrial Scrubber & Sweeper (S650S / W1100R) 21

Custom Ordered Equipments 22

https://truckmanualshub.com/

ELECTRIC FORKLIFT TRUCK

SBF-A SERIES

■ AC Drive Motor

▶ With AC Drive motor, powerful acceleration in up-hill drive.

■ Safety

▶ With motor and controller protection, drive control is safe.

■ Simple and Easy LCD

▶ Any signs will show to the operator to inform the statues of the vehicle.

■ Specifications

Model		Unit	SBF-15A	SBF-18A	SBF-20A	SBF-25A
Load Capacity		kg	1500	1800	2000	2500
Max. Lifting Height		mm	3000	3000	3300	3300
Tilting Angle		Degrees	6 degrees forward /12 degrees backward			
Free Lift		mm	155			
Lifting Speed	With / Without Load	mm/sec	270 / 450	280 / 530	280 / 490	260 / 490
Travel Speed	With / Without Load	km/h	16/15	16/15	15/14	15/14
Outside Turning Radius		mm	1930	1960	2065	2065
Grade Clearance (Loaded)		%	18	15	16	15
Overall Length with Fork		mm	3050	3073	3303	3453
Overall Width		mm	1070		1150	
Overhead guard height		mm	2160		2130	
Overall Height Mast Lowered		mm	1995		2295	
Max. Mast height		mm	4030		4330	
Fork Length		mm	920		920	1070
Load Distance		mm	425		483	483
Weight (Incl. Battery)		kg	3000	3250	4050	4200
Wheel Base		mm	1370		1515	
Tires	Front	-	6.5-10-10PR		7.00-12-12PR	
	Rear	-	5.00-8-10PR		18 x 7-8-14PR	
Control	Drive	-	MOSFET (CURTIS BRAND)			
	Hydraulic					
Motor	Drive	kw	8.0 (AC)		11.1 (AC)	
	Hydraulic	kw	7.5 (DC)		10.5 (DC)	
Battery		-	48V 400Ah		48V 600Ah	
Battery Charger		-	3Φ x 220V / 380V / 400V x 50 or 60Hz			

※ The above appearance and specifications are subject to change without prior notice.

ELECTRIC FORKLIFT TRUCK

SBF-A SERIES

■ DRAWING

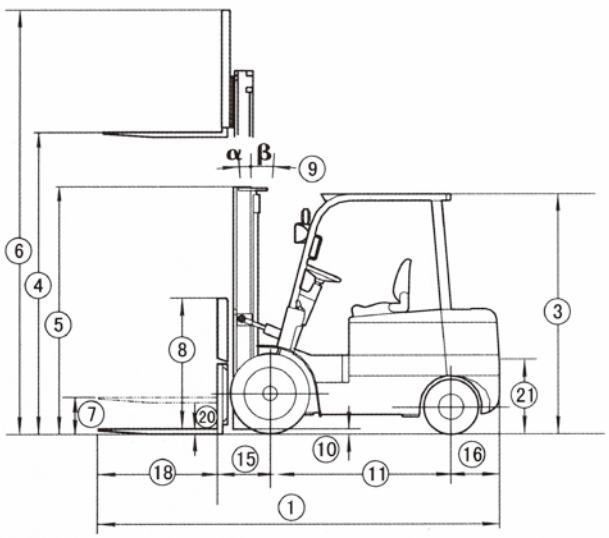

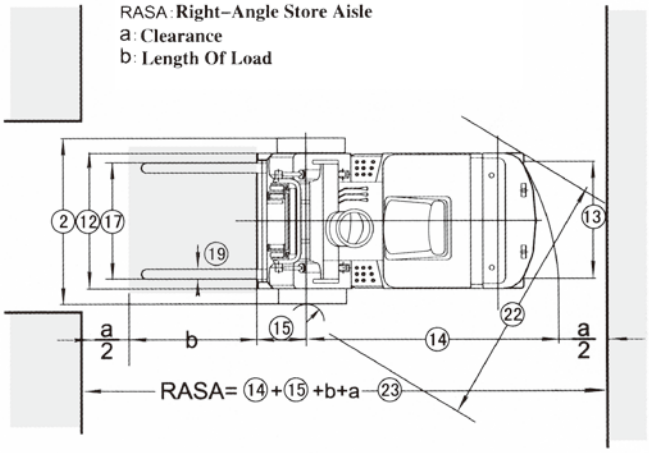

■ DIMENSION

Model	Unit	NO	SBF-15A	SBF-18A	SBF-20A	SBF-25A
Length With Fork	mm	1	3050	3073	3303	3453
Overall Width	mm	2	1070		1150	
Overhead Guard Height	mm	3	2160		2130	
Lift Height	mm	4	3000		3300	
Mast Lowered Height	mm	5	1995		2295	
Mast Extended Height	mm	6	4030		4330	
Free Lift	mm	7	155			
Backrest Height	mm	8	1000			
Mast Tilt Angle F/R	°	9	6° / 12°			
Ground Clearance at Mast Loaded	mm	10	110		140	
Wheel Base	mm	11	1370		1515	
Tread (Center Of Tire) Front	mm	12	950		960	
Tread (Center Of Tire) Rear	mm	13	920		950	
Outside Turning Radius	mm	14	1930	1960	2065	
Load Distance	mm	15	425		483	
Rear Overhang	mm	16	335		385	
Fork Extended (Min./Max.)	mm	17	200~950		245~1020	
Fork Length	mm	18	920		920	1070
Fork Width	mm	19	100		122	
Fork Thick	mm	20	35		40	
Connect Link High	mm	21	335		355	
Right Angle Store Aisle	mm	22	1980		2235	
Right Stack Aisle Width (Pallet Size 1000x1000, Clearance 200)	mm	23	3560	3590	3748	3808
Right Stack Aisle Width (Pallet Size 1200x1200, Clearance200)	mm	23	3760	3790	3948	3948

※ The above appearance and specifications are subject to change without prior notice.

https://truckmanualshub.com/

ELECTRIC FORKLIFT STAND UP TYPE

SBR SERIES

Comfortable operation without noise by hydraulic control system.
Smooth speed control for your safe working condition.
Built-in battery exchange unit.

EXPERIENCE THE NEW AC POWER!!

■ Specifications

Model		Unit	SBR-16	SBR-18	SBR-20	SBR-25
Load Capacity ☆		kg	1600	1800	2000	2500
Load Center		mm	500	500	500	500
Max. Lifting Height		mm	3000	3000	3000	3000
Free Lift		mm	340	340	340	340
Lifting Speed (With / Without Load)		mm/s	250/320	250/320	250/320	250/320
Travel Speed (With / Without Load)		km	9.5 / 10.5	9.5 / 10.5	9.5 / 10.5	9.5 / 10.5
Turning Radius		mm	1895	1895	1920	2080
Reach Stroke		mm	620	620	620	620
Overall Length		mm	2377	2377	2403	2513
Overall Width		mm	1090	1090	1140	1140
Overall Height	Overhead Guard	mm	2290	2290	2290	2290
	Mast Lowered	mm	2052	2052	2052	2052
	Mast Lifted	mm	4030	4030	4030	4030
Wheel Base		mm	1542	1542	1542	1542
Fork Length		mm	1030	1030	1030	1030
Weight (Incl. Battery)		kg	2300	2400	2740	2860
Wheel	Front	mm	ure Φ250 x 114 x 2EA			
	Rear	mm	ure Φ320 x 145 x 1EA			
	Caster	mm	ure Φ178 x 74 x 2EA			
Control	Drive	-	F.E.T Control Type			
	Hydraulic	-	F.E.T Control Type			
Motor	Drive	kw	AC 5.3			
	Hydraulic	kw	DC 6.3		DC 7.5	
	Steering	kw	0.3 (EPS)			
Battery	Voltage	-	DC48V			
	Capacity	-	268AH	288AH	320AH	
Battery Charger	System	-	Digital			
	Input Power Source		3Φ x 220V / 380V, 50/60Hz			

☆ Based on the rated load center.
※ The above appearance and specifications are subject to change without prior notice.

https://truckmanualshub.com/

ELECTRIC FORKLIFT TRUCK-WALKIE REACH TYPE

SWR SERIES

Smaller warehouses require smaller lift trucks.
The SW series walkie stackers are the excellent alternative to bigger forklift trucks in small areas.
The compact size of the SW series are highly maneuverable, efficient and easy to use.

▶ Combined discharge indicator & Hour meter

▶ Tiller Head and Controls
Easy operation with the tiller in the upright position

■ Specifications

Model		Unit	SWR-1300L	SWR-1300L	SWR-1500L
Load Capacity ☆		kg	1300	1300	1500
Load Center		mm	500		
Max. Lifting Height		mm	1500	2500	2500
Gradeability		%	10		
Reach Stroke		mm	550		
Overall Length		mm	2317	2317	2355
Overall Width		mm	1039	1039	1039
Overall Height		mm	1999	1859	1859
Wheel Base		mm		1379	1379
Fork Length & Width		mm	1030 x 100		
Fork Spread Min./Max.		mm	216~740		
Weight (Incl. Battery)		kg	1735	1795	1920
Turning Radius	With / Without footstep	mm	1728 / 1645		
	Footstep on	mm	2077		
Travel Speed	With / Without Load	km/hr	3~4 / 4~5		
Motor	Driving Motor	kw	24V x 1.1kw		
	Hydraulic Motor	kw	24V x 2.0kw		
Lifting Speed	With / Without Load	mm/sec	N /A	70 / 80	
Battery		–	24V×268Ah / 5Hr		
Battery Charger		–	AC1Φ x 220V, 50 / 60Hz		
Control	Drive	–	F.E.T Control Type		
	Hydraulic	–	Magnetic Contactor Type		

☆ Based on the rated load center.
※ The above appearance and specifications are subject to change without prior notice.
※ Available up to 3stage, 4500mm.

ELECTRIC FORKLIFT TRUCK WALKIE TYPE

SOOSUNG

SWC / SWS SERIES

▲ SWC- 1000

■ Specifications

Model		Unit	SWC-1000	SWC-1000L
Load Capacity ☆		kg	1000	1000
Load Center		mm	400	400
Max. Lifting Height		mm	1500	2500
Gradeability		%	10	10
Overall Length	With footstep	mm	2479	2511
	Without footstep	mm	2395	2427
Overall Width		mm	900	900
Overall Height		mm	1999	1859
Wheel Base		mm	1195	1195
Fork Length		mm	830	830
Fork Spread Min./Max.		mm	216~660	216~660
Weight (Incl. Battery)		kg	1540	1600
Turning Radius		mm	1464	1464
Travel Speed	With Load	km/hr	3~4	
	Without Load	km/hr	4~5	
Motor	Drive	kw	24V x 1.1	
	Hydraulic	kw	24V x 2.0	
Battery		-	24V x 268Ah / 5Hr	
Battery Charger		-	AC1Φ x 220V, 50 / 60Hz	
Control	Drive	-	F.E.T Control Type	
	Hydraulic	-	Magnetic Contactor Type	

☆ Based on the rated load center.
※ The above appearance and specifications are subject to change without prior notice.
※ Available up to 2stage, 4000mm.

▲ SWS- 1000P

■ Specifications

Model		Unit	SWS-1000P	SWS-1000LP
Load Capacity ☆		kg	1000	1000
Load Center		mm	500	500
Max. Lifting Height		mm	1500	2500
Gradeability		%	10	10
Overall Length		mm	2085	2122
Overall Width		mm	740	740
Overall Height		mm	1975	1885
Wheel Base		mm	1386	1386
Fork Length		mm	1150	1150
Fork Spread (optional)		mm	550 / 680	550 / 680
Weight (Incl. Battery)		kg	1100	1160
Turning Radius		mm	1626	1626
Travel Speed	With Load	km/hr	3~4	
	Without Load	km/hr	4~5	
Motor	Driving	kw	24V x 1.1	
	Hydraulic	kw	24V x 2.0	
Battery		-	24V x 170Ah / 5Hr	
Battery Charger		-	AC1Φ x 220V, 50 / 60Hz	
Control	Drive	-	F.E.T Control Type	
	Hydraulic	-	Magnetic Contactor Type	

☆ Based on the rated load center.
※ The above appearance and specifications are subject to change without prior notice.
※ Available up to 2stage, 4000mm.

https://truckmanualshub.com/

ELECTRIC PALLET TRUCK

SWP-1300 SERIES

Demonstrate the superior ability to work in a small space.

■ Features

- Compact design combined with new technology, making this product ideal for narrow, cramped aisles.
  The shortest head length among competitors gives the best possible maneuverability.
- Smooth speed control with advanced technology.
- Powerful traction battery.
- DC driving motor.
- Drive unit with electromagnetic brake.
- Battery charger installed (Built-in type)

▶ Combined discharge indicator & Hour meter

▶ Tiller Head and Controls
Easy operation with the tiller in the upright position

■ Specifications

Model		Unit	SWP-1300
Load Capacity ☆		kg	1300
Load Center		mm	600
Max. Lifting Height		mm	205
Min. Lifting Height		mm	85
Gradeability		%	10
Overall Length		mm	1688
Overall Width		mm	688
Overall Height		mm	1192
Wheel Base		mm	1140
Fork Width		mm	150
Fork Spread		mm	520 or 680
Weight	With / Without Battery	kg	240 / 198
Turning Radius		mm	1507
Travel Speed	With / Without Load	km / hr	3~4 / 5~6
Lifting Speed	With / Without Load	mm / s	15 / 20
Motor	Drive	kw	24V × 0.9
	Hydraulic	kw	24V × 0.8
Battery		–	12V × 75Ah (2EA)
Battery Charger		–	1Φ × 220V, 50 / 60Hz (Built-in type)
Control	Drive	–	F.E.T Control Type
	Hydraulic	–	Magnetic Contactor Type

☆ Based on the rated load center.
※ The above appearance and specifications are subject to change without prior notice.

https://truckmanualshub.com/

ELECTRIC PALLET TRUCK

SWP-2000 SERIES

Demonstrate the superior ability to work in a small space.

■ Features

- Compact design combined with new technology, making this product ideal for narrow, cramped aisles.
- Smooth speed control with advanced technology.
- Powerful traction battery.
- DC driving motor.
- Drive unit with electromagnetic brake.

▶ Combined discharge indicator & Hour meter

▶ Tiller Head and Controls
Easy operation with the tiller in the upright position

■ Specifications

Model		Unit	SWP-2000
Load Capacity ☆		kg	2000
Load Center		mm	600
Max. Lifting Height		mm	205
Min. Lifting Height		mm	85
Gradeability		%	10
Overall Length		mm	1937
Overall Width		mm	730
Overall Height		mm	1300
Wheel Base		mm	1150
Fork Width		mm	175
Fork Spread		mm	680
Weight	With / Without Battery	kg	570 / 412
Turning Radius		mm	1740
Travel Speed	With / Without Load	km / hr	3~4 / 5~6
Lifting Speed	With / Without Load	mm / s	70 / 80
Motor	Drive	kw	24V × 1.1
	Hydraulic	kw	24V × 2.0
Battery		–	24V × 170Ah/5Hr (158kg x 1EA)
Battery Charger		–	1Φ × 220V, 50 / 60Hz
Control	Drive	–	F.E.T Control Type
	Hydraulic	–	Magnetic Contactor Type

☆ Based on the rated load center.
※ The above appearance and specifications are subject to change without prior notice.

https://truckmanualshub.com/

ELECTRIC PALLET TRUCK

SWP 2500 / 3000 SERIES

The most powerful unit in SWP Series.

▶ Tiller Head and Controls
Easy operation with the tiller in the upright position

■ Specifications

Model		Unit	SWP-2500	SWP-3000
Load Capacity ☆		kg	2500	3000
Load Center		mm	575	575
Max. Lifting Height		mm	205	205
Min. Lifting Height		mm	85	85
Gradeability		%	10	10
Overall Length		mm	2041	2099
Overall Width		mm	750	750
Overall Height		mm	1390	1390
Wheel Base		mm	1150	1150
Fork Spread		mm	680	680
Weight (Incl. Battery)		kg	625	660
Turning Radius		mm	1820	1878
Travel Speed	With / Without Load	km / hr	3~4 / 5~6	3~4 / 5~6
Motor	Drive	kw	24V × 1.1	24V × 1.1
	Hydraulic	kw	24V × 2.0	24V × 2.0
Battery		–	24V × 170Ah/5Hr	24V x 268Ah / 5Hr
Battery Charger		–	AC1Φ × 220V, 50 / 60Hz	
Control	Drive	–	F.E.T Control Type	
	Hydraulic	–	Magnetic Contactor Type	

☆ Based on the rated load center.
※ The above appearance and specifications are subject to change without prior notice.

▼ Powder Coating

▼ Fork length modification

▼ Fork house modification

▼ Stainless steel fork for Clean room

https://truckmanualshub.com/

ELECTRIC RIDER PALLET MOVER / HAND PALLET TRUCK

SOOSUNG

SRP SERIES

- The best solution for long distance transportation of heavy pallet loads, even in narrow pathways.
- Can be widely used in distribution centers, factories, supermarkets, warehouses and freight terminals.
- Safe, fast and easy operation, for even the untrained operators

■ Specifications

Model		Unit	SRP-3000L
Load Capacity ☆		kg	2200
Lift Height		mm	85~205
Load Center		mm	1209
Fork Length		mm	2419
Turning Radius		mm	2955
Wheel Base		mm	2387
Overall Length		mm	3568
Overall Height		mm	1432
Overall Width		mm	906
Cylinder		mm	Φ70 x 125st
Lifting Speed	With / Without Load	mm/sec	70 / 80
Motor	Drive	-	DC 24V x 1.5kw
	Hydraulic	-	24V x 2.4kw
Battery		-	24V x 268Ah / Hr
Battery Charger		-	AC1Φ x 220V, 50 / 60Hz
Color		-	STANDARD

☆ Based on the rated load center.
※ The above appearance and specifications are subject to change without prior notice.

SHP SERIES

S-Type ▶

※Double front wheel (optional).

※ Customized order is only available with S-Type .

C-Type ▶

■ Specifications

Model	UNIT	SHP-1500	SHP-2500	SHP-3500	SHP-1500	SHP-2500
		S-Type			C-Type	
Load Capacity	kg	1500	2500	3500	1500	2500
Max. Fork Height	mm	205	205	205	205	205
Min. Fork Height	mm	85	85	85	85	85
Length	mm	1430	1530	1600	1430	1530
Width	mm	550	680	680	550	680
Height	mm	1200	1200	1200	1200	1200
Fork length	mm	1050	1140	1200	1050	1140
Fork width	mm	550	680	680	550	680
Weight	kg	85	90	130	85	90

※ The above appearance and specifications are subject to change without prior notice.

https://truckmanualshub.com/

ELECTRIC TOW TRACTOR

STT / SCT SERIES

The STT and the SCT are ideal choices wherever large quantities of goods have to be moved. Soosung tractors can easily transport goods from one point to another.

▼ STT-2000

▼ SCT-2000N

■ Specifications

Model		Unit	STT-2000	SCT-2000N
Towing Capacity		kg	2000	2000
Towing Power		kg	50	50
Drawbar Height (Lifted / Lowered)		mm	325 / 200	290 / 200
Drawbar		mm	Φ30 x 60L	Φ30 x 60L
Gradeability		%	10	10
Overall Length		mm	1339	1565
Overall Width		mm	750	750
Overall Height		mm	1390	1458
Weight		kg	720	610
Turning Radius		mm	1120	1260
Travel Speed	With / Without Load	km/hr	4~5 / 5~6	3~4 / 5~6
Motor	Drive	kw	24V x 1.1	24V x 1.1
	Hydraulic	kw	24V x 2.0	
Battery		-	24V x 170Ah / 5Hr	
Battery Charger		-	AC1Φ x 220V, 50 / 60Hz	
Control	Drive	-	F.E.T Control Type	
	Hydraulic	-	Magnetic Contactor Type	

※ The above appearance and specifications are subject to change without prior notice.
※ Option added, delivery will be changed.

▼ For clean room

▼ In textile company

▼ Sit-down type SCT

https://truckmanualshub.com/

ELECTRIC TOW TRACTOR

SST SERIES

▲ SST-4000 (3-wheel)

- Suitable for large volumes and various types of cargo transportation.
- Suitable for trailer, bulky and heavy cargo (load) as well
- Easy operation, even for the inexperienced operator.
- Electrically powered cart, using a DC motor, enables the users to enjoy a non-polluting, noise free and pleasant working condition

SST-8000 (4-wheel) ▶

■ Specifications

Model		Unit	SST-4000 (3Wheel)	SST-6000 (3Wheel)	SST-8000 (4Wheel) / New Model
Towing Load		kg	4000	6000	8000
Towing Power		kg	100	150	200
Hook Height		mm	290	290	350 / 325
Overall Length		mm	2277	2436	2220 / 2443
Overall Width		mm	1100		
Overall Height		mm	1458	1458	1500 / 1585
Weight		kg	1240	1436	2200 / 1730
Wheel Base		mm	1398	1532	1300 / 1331
Turning Radius		mm	1724	1858	2078 / 2593
Travel Speed	With / Without Load	km/hr	6 / 10	6 / 10	8 / 12
Driving Motor		kw	AC 30V, 5.3kw	AC 30V, 5.3kw	DC 48V, 5kw
Battery		-	DC48V x 201Ah/5Hr	DC48V x 320Ah/5Hr	DC48V x 400Ah/5Hr
Battery Charger		-	AC1Φ x 220V, 50 / 60Hz	AC1Φ x 220V, 50 / 60Hz	AC3Φ x 380V, 50 / 60Hz
Control		-	F.E.T Control Type		
Tire	Type	-	Solid Tire	Solid Tire	R : Pneumatic F : Solid
	Front	(no.)	Φ343 x 140 (1)	Φ343 x 140 (1)	5.00-8 (2)
	Rear	(no.x=driven)	4.00-8 (2)	5.00-8 (2)	6.50-10PR (2x)

※ The above appearance and specifications are subject to change without prior notice.
※ Option added, delivery will be changed.

▼ The previous SST model

▼ Cabin with warning light

▼ Lift-type towing hook

▼ Cabin installed

▼ Cabin installed

https://truckmanualshub.com/

ELECTRIC PLATFORM TRUCK

SPT SERIES

The SPT platform truck and tow tractor are ideal choices wherever large quantities of goods have to be moved. Soosung tractors can transport goods from one point to anther with ease.

▲ SPT-1000 (3-wheel)

▲ SPT-2000 (3-wheel)

■ Specifications

Model		Unit	SPT-1000 (3Wheel)	SPT-2000 (3Wheel)
Load Capacity		kg	1000	2000
Cargo Deck	Length	mm	1700	1400
	Width	mm	1140	1100
	Height	mm	454	550
Overall Length		mm	3115	3031
Overall Width		mm	1140	1170
Overall Height		mm	1898	1480
Weight		kg	782	1380
Wheel Base		mm	2007	1982
Turning Radius		mm	2689	2308
Travel Speed	With / Without Load	km/hr	10 / 15	6 / 10
Driving Motor		kw	4	4
Battery		-	DC48V x 170Ah/5Hr	DC48V x 201Ah/5Hr
Battery Charger		-	AC1Φ x 220V, 50 / 60Hz	AC1Φ x 220V, 50 / 60Hz
Control System		-	F.E.T Control Type	F.E.T Control Type
Tire	Type	-	Solid Tire	Solid Tire
	Front	(no.)	4.00-8 (1)	Φ343 x 140 (1)
	Rear	(no.x=driven)	4.00-8 (2)	5.00-8 (2)

※ The above appearance and specifications are subject to change without prior notice.
※ Option added, delivery will be changed.

▼ Crane attached Hyundai Powertec

▼ Cabin installed

▼ Reel pump & hose installed

https://truckmanualshub.com/

HYDRAULIC STACKER / ELECTRIC DC STACKER

SFH SERIES

SFH helps you to perform the jobs safely and quickly in narrow spaces.

■ Specifications

Model		Unit	SFH-500	SFH-1000
Load Capacity ☆		kg	500	1000
Load Center		mm	350	
Lifting Height		mm	1500	
Fork Length		mm	700	
Overall Length		mm	1126	1124
Overall Width		mm	878	1028
Overall Height		mm	1950	2040
Fork Spread (Min/Max)		mm	162~840	219~990
Outside Straddle Width		mm	650	700
Wheel	Front	mm	Φ80	
	Rear (Rotating)	mm	Φ150	
Weight		kg	150	220

☆ Based on the rated load center.
※ The above appearance and specifications are subject to change without prior notice.

SFE SERIES

■ Specifications

Model		Unit	SFE-500	SFE-500L	SFE-1000	SFE-1000L
Load Capacity ☆		kg	500		1000	
Load Center		mm	350			
Lifting Height		mm	1500	2500	1500	2500
Fork Length		mm	700			
Overall Length		mm	1260		1314	
Overall Width		mm	878	859	1028	909
Overall Height		mm	2030	1890	2040	1900
Fork Spread (Min/Max)		mm	162~840	162~670	216~990	216~670
Outside Straddle Width		mm	650	850	700	900
Battery			12V x 100Ah / 5Hr		12V x 140Ah / 5Hr	
Battery Charger			1Φ x 220V x 50 / 60Hz			
Wheel	Front	mm	Φ80			
	Rear (Rotating)	mm	Φ200			
Weight		kg	240	280	320	340

☆ Based on the rated load center.
※ The above appearance and specifications are subject to change without prior notice.

https://truckmanualshub.com/

DRUM HANDLING EQUIPMENT

SOOSUNG

SDL-300 SERIES

◀ SDL-300E Series

■ Specifications

Model		Unit	SDL-300H	SDL-300HL	SDL-300E	SDL-300EL
Load Capacity		kg	300		300	
Max. Drum Lifting Height			1500	2500	1500	2460
Drum Size		mm	Φ600x900L		Φ600x900L	
Drum Turning Angle		mm	360		360	
Overall Length		mm	1390		1560	
Overall Width		mm	1080	1095	1080	1095
Overall Height		mm	2065	1990	2065	1990
Wheel	Front	mm	Φ250		Φ250	
	Rear (Rotating)	mm	Φ150		Φ200	
Battery			N / A (Manual Type)		12V x 100Ah / 5Hr	
Battery Charger					1Φ x 220V x 50/60Hz	
Weight		kg	205	250	250	300

※ The above appearance and specifications are subject to change without prior notice.

SDP-300F SERIES

▼ Clamping

▼ Clamping and Lifting by Footstep

■ Specifications

Model		Unit	SDP-300F	SDP-300FS
Load Capacity		kg	300	300
Max.Drum Lifting Height		mm	310~330	310~330
Drum Size		mm	Φ600x900L	Φ600x900L
Overall Length		mm	1061	1100
Overall Width		mm	892	892
Overall Height		mm	1135	1135
Wheel	Front	mm	Φ250	Φ250
	Rear (Rotating)	mm	Φ150	Φ150
Weight		kg	90	100

※ The above appearance and specifications are subject to change without prior notice.

https://truckmanualshub.com/

ELECTRIC SELF-PROPELLED ELEVATING WORK PLATFORM

SSL SERIES

▲ SSL-3370
Max. Platform Height 10M
(Max. Working Height 12M)

Designed for working in the high places such as building maintenance, machinery maintenance, construction, cleaning, and photography / cinematography / broadcasting shooting. Soosung's electric scissor lifts provide the most stable work platform for various applications.

■ SSL- 1932/ 2646/ 3370

- Roll-out deck extension (Standard)
- Tight turning radius
- 110/220 volt AC outlet on platform
- 24V battery and built-in battery charger
- Automatic parking brake
- One-hand joystick with proportional controls
- Emergency stop switch & Manual lowering valve

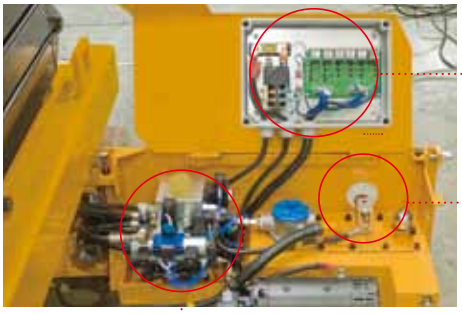

- Hydraulic and electric control system
- Control box designed for easy maintenance

▶ Electric Control System

▶ Hydraulic Valve

▶ Emergency Lowering Valve

▶ Drum Brake applied

▶ Joystick provides precise and simultaneous travel control

· Battery

· Built-in Charger

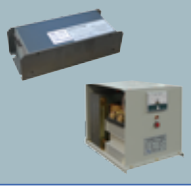

· Safety Level Sensor

· Electric Outlet Socket

https://truckmanualshub.com/

ELECTRIC SELF-PROPELLED ELEVATING WORK PLATFORM

SSL SERIES

SSL-1932 ▶
Max. Platform Height 5.8M
(Max. Working Height 7.8M)

◀ SSL-2646
Max. Platform Height 7.9M
(Max. Working Height 9.9M)

■ Specifications

Model		SSL-1432	SSL-1932	SSL-2046	SSL-2646	SSL-3370	SSL-4070
Height	Working:Max	6.49m	7.8m	8.07m	9.9m	12m	14m
	Platform:Max	4.49m	5.8m	6.07m	7.9m	10m	12m
	Platform:Min	0.9m	1.01m	1.02m	1.16m	1.66m	1.85m
	Stowed	2.00m	2.11m	2.12m	2.26m	2.76m	2.95m
Overall Length		1.85m	1.85m	2.39m	2.39m	3.51m	3.51m
Overall Width		0.82m	0.82m	1.14m	1.14m	1.72m	1.72m
Platform	Size (L x W)	0.71 x 1.61m		1.13 x 2.18m		1.50 x 3.3m	
	Length of Ext. Platform	0.85m	0.85m	0.85m	0.85m	1.2m	1.2m
Load Capacity	Main Platform	270kg	227kg	450kg	390kg	600kg	300kg
	Ext. Platform	113kg	113kg	136kg	136kg	156kg	156kg
Wheelbase		1.32m		1.72m		2.5m	
Wheel Tread		0.72m		1.04m		1.49m	
Ground Clearance		0.08m		0.08m		0.19m	
No. of bording allowed /Person(80kg.)		1		2		3	
Turning Radius	Inside Curve	1.44m		2.12m		3.35m	
	Outside Curve	1.74m		2.74m		4.85m	
Travel Speed	Elevated	0.8km/Hr		0.8km/Hr		0.9km/Hr	
	Low	2km/Hr		1.8km/Hr		0.9km/Hr	
	High	3km/Hr		2.5km/Hr		2.8km/Hr	
	Gradeability	20%					
Lift/Lower Speed (Max Load)		20/48 Sec	25/52 Sec	40/54 Sec	49/56 Sec	60/50 Sec	63/54 Sec
Battery		24V (4 x 6V 220AH)		24V (8 x 6V 220AH)		24V (8 x 6V 220AH)	
Battery Charger		1Ø x 220V, 50 / 60Hz (30amp)		1Ø x 220V, 50 / 60Hz (40amp)		1Ø x 220V, 50 / 60Hz (40amp)	
Tire (Solid Tires)		Φ358 x W102		Φ405 x W116		Φ676 x W246	
Drive System		Hydraulic Front-drive		Hydraulic Front-drive		DC Geared Motor Rear-drive	
Brake		Hydraulic					
Weight (Incl. Battery)		1,204kg	1,267kg	2,174kg	2,375kg	3,970kg	4200kg

※ The above appearance and specifications are subject to change without prior notice.

https://truckmanualshub.com/

INDUSTRIAL SCRUBBER & SWEEPER

SOOSUNG

S1100R

RIDE-ON SCRUBBER (CYLINDER TYPE)

- Cylinder fitted with a brush and dust tray, wet and dry cleaning is available at the same time.
- Excellent cleaning ability by attaching two powerful suction motors and cylinder brush.
- Brush selection is available in accordance with the floor type.
- Equipped with non-marking tires.
- Eco-friendly brush disk.

■ Specifications

Lithium battery option available in all models.

Technical Data		Unit	S1100R
Battery	Voltage	V	36 (6V X 6EA)
	Capacity	Ah	435
Motor Power	Traction	W	1400
	Brush	W	1,600 (800 X 2EA)
	Vacuum	W	1,120 (560 X 2EA)
Productivity Rate		m^2	8160
Working Width		mm	1100
Suction Width		mm	1300
Max. Speed		km / h	7.5
Running Time		h	4 (435Ah Battery)
Tank Capacity	Solution	ℓ	270
	Recovery	ℓ	270
Cylinder Brush Diameter		mm	220 X 2EA
Brush Speed		rpm	600
Dimension (L X W X H)		mm	1900 x 1100 x 1500
Weight w/o Battery		kg	350
Weight w/ Battery		kg	690

※ The above appearance and specifications are subject to change without prior notice.

S860R

RIDE-ON SCRUBBER

- Vertical type traction provides motor protection and durability.
- Select 3 different types of brush is available by the floor type.
- Brush selection is available with 3 types in accordance with the floor type.
- Brush Deck and Squeegee Deck in Stainless to improve corrosion resistance.
- Equipped with non-marking tires.
- Eco-friendly brush disk.

■ Specifications

Lithium battery option available in all models.

Technical Data		Unit	S860R
Battery	Voltage	V	36 (6V X 6EA)
	Capacity	Ah	330
Motor Power	Traction	W	1200
	Brush	W	1200
	Vacuum	W	560
Productivity Rate		m^2	6020
Working Width		mm	840
Suction Width		mm	1050
Sound Pressure Level		dB(A)	75
Max. Speed		km / h	7.5
Gradeability		%	17.5
Running Time		h	3.5 (330Ah Battery)
Tank Capacity	Solution	ℓ	140
	Recovery	ℓ	140
Brush Diameter		mm	410 X 2EA
Max. Brush Pressure		kg	100
Brush Speed		rpm	250
Dimension (L X W X H)		mm	1670 X 995 X 1340
Weight w/o Battery		kg	240
Weight w/ Battery		kg	500

※ The above appearance and specifications are subject to change without prior notice.

https://truckmanualshub.com/

INDUSTRIAL SCRUBBER & SWEEPER

SOOSUNG

S650S

STAND-ON SCRUBBER

- Vertical type traction proves motor protection and durability.
- Brush selection is available with 3 types in accordance with the floor type.
- Brush Deck and Squeegee Deck in Stainless to improve corrosion resistance.
- Equipped with non-marking tires.
- Eco-friendly brush disk.

■ Specifications

Lithium battery option available in all models.

Technical Data		Unit	S650S
Battery	Voltage	V	36 (12V X 3EA)
	Capacity	Ah	225
Motor Power	Traction	W	600
	Brush	W	400
	Vacuum	W	560
Productivity Rate		m^2	3250
Working Width		mm	680
Suction Width		mm	860
Max. Speed		km / h	6
Running Time		h	3.5 (225Ah Battery)
Tank Capacity	Solution	ℓ	110
	Recovery	ℓ	110
Brush Diameter		mm	340 X 2EA
Brush Pressure		kg	60
Brush Speed		rpm	250
Dimension (L X W X H)		mm	1385 X 855 X 1400
Weight w/o Battery		kg	170
Weight w/ Battery		kg	340

※ The above appearance and specifications are subject to change without prior notice.

W1100R

RIDE-ON SWEEPER

- Vertical type traction provides motor protection and durability.
- Equipped with HEPA filter reduces scattering dust.
- Equipped with non-marking tires.
- Reduces cleaning time in large areas with 2 side brushes.

■ Specifications

Lithium battery option available in all models.

Technical Data		Unit	W1100R
Battery	Voltage	V	36 (12V X 3EA)
	Capacity	Ah	225
Motor Power	Traction	W	1200
	Brush	W	500
	Vacuum	W	560
Productivity Rate		m^2	8250
Working Width		mm	1100
Max. Speed		km / h	8
Running Time		h	3.5 (225Ah Battery)
Filter Area		m^2	3.5
Tank Capacity		ℓ	60 (30 X 2EA)
Main Brush Diameter		mm	590
Side Brush Diameter		mm	400 X 2EA
Brush Speed		rpm	550
Dimension (L X W X H)		mm	1830 X 1000 X 1250
Weight w/o Battery		kg	250
Weight w/ Battery		kg	415

※ The above appearance and specifications are subject to change without prior notice.

https://truckmanualshub.com/

CUSTOM ORDERED EQUIPMENTS

SOOSUNG

https://truckmanualshub.com/

CUSTOM ORDERED EQUIPMENTS

SOOSUNG

56

57

58

59

60

61

62

63

64

65

66

67

68

69

70

71

72

73

74

75

76

77

78

79

80

81

82

83

84

85

86

87

88

89

90

91

92

93

94

95

96

97

98

99

100

101

102

103

104

105

106

107

108

109

110

111

https://truckmanualshub.com/

World-Wide Export

The World's Best Technology & Quality

ARGENTINA	CHINA	GERMANY	JORDAN	MYANMAR	PORTUGAL	TAIWAN
ARMENIA	COLOMBIA	GUATEMALA	KAZAKHSTAN	NICARAGUA	QATAR	THAILAND
AUSTRALIA	COSTA RICA	INDIA	KUWAIT	NIGERIA	RUSSIA	TURKEY
BANGLADESH	CYPRUS	INDONESIA	LEBANON	OMAN	SAUDI ARABIA	U.A.E.
BELARUS	DENMARK	IRAN	LIBYA	PAKISTAN	SINGAPORE	U.S.A.
BRAZIL	EGYPT	ISRAEL	MALAYSIA	PANAMA	SPAIN	UKRAINE
CANADA	EL SALVADOR	ITALY	MEXICO	PERU	SRI LANKA	VENEZUELA
CHILE	FRANCE	JAPAN	MOROCCO	PHILIPPINES	SYRIA	YEMEN

Designed by : www.ex-com.co.kr 82-2-3141-7336 2012.08

SOOSUNG LIFT MFG. CO., LTD.

Head office · Factory : 46-39, Robotland-Ro, 249 Beon-Gil, Seo-Gu, Incheon, Korea (Gyeongseo-Dong)
TEL : 82-32-820-5137 FAX : 82-32-582-7513
website : www.soosung.com
e-mail : soosung@soosung.com