OPERATOR'S MANUAL

ENGLISH

KUBOTA
DIESEL ENGINE

MODELS V2607-DI-T-E3-B
V3307-DI-T-E3-B

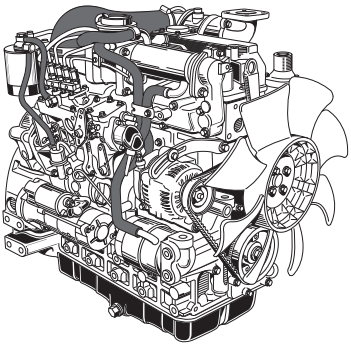

1ABAHAAAP0140

[V2607-DI-T-E3-B]

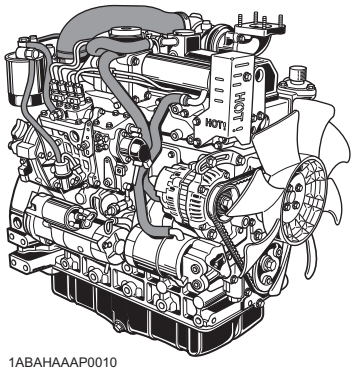

1ABAHAAAP0010

[V3307-DI-T-E3-B]

1G777-8911-6

READ AND SAVE THIS MANUAL

Kubota

ENGLISH

FOREWORD

You are now the proud owner of a KUBOTA Engine. This engine is a product of KUBOTA quality engineering and manufacturing. It is made of fine materials and under a rigid quality control system. It will give you long, satisfactory service. To obtain the best use of your engine, please read this manual carefully. It will help you become familiar with the operation of the engine and contains many helpful hints about engine maintenance. It is KUBOTA's policy to utilize as quickly as possible every advance in our research. The immediate use of new techniques in the manufacture of products may cause some small parts of this manual to be outdated. KUBOTA distributors and dealers will have the most up-to-date information. Please do not hesitate to consult with them.

SAFETY FIRST

This symbol, the industry's "Safety Alert Symbol", is used throughout this manual and on labels on the machine itself to warn of the possibility of personal injury. Read these instructions carefully. It is essential that you read the instructions and safety regulations before you attempt to assemble or use this unit.

DANGER : Indicates an imminently hazardous situation which, if not avoided, will result in death or serious injury.

WARNING : Indicates a potentially hazardous situation which, if not avoided, COULD result in death or serious injury.

CAUTION : Indicates a potentially hazardous situation which, if not avoided, MAY result in minor or moderate injury.

IMPORTANT : Indicates that equipment or property damage could result if instructions are not followed.

NOTE : Gives helpful information.

CONTENTS

ENGLISH

⚠SAFE OPERATION 1
SERVICING OF THE ENGINE 1
NAMES OF PARTS 2
PRE-OPERATION CHECK 3
BREAK-IN 3
DAILY CHECK 3
OPERATING THE ENGINE 4
STARTING THE ENGINE(NORMAL) 4
COLD WEATHER STARTING 5
STOPPING THE ENGINE 6
CHECKS DURING OPERATION 6
Radiator Cooling water(Coolant) 6
Oil pressure lamp 7
Charge lamp 7
Fuel 7
Color of exhaust 7
Immediately stop the engine if; 7
REVERSED ENGINE REVOLUTION AND REMEDIES 7
How to tell when the engine starts running backwards 7
Remedies 7
MAINTENANCE 8
SERVICE INTERVALS 9
PERIODIC SERVICE 11
FUEL 11
Fuel level check and refueling 11
Air bleeding the fuel system 11
Checking the fuel pipes 13
Cleaning the fuel filter pot 13
Fuel filter cartridge replacement 14
ENGINE OIL 14
Checking oil level and adding engine oil 14
Changing engine oil 15
Replacing the oil filter cartridge 16
RADIATOR 16
Checking coolant level, adding coolant 17
Changing coolant 18
Remedies for quick decrease of coolant 18
Checking radiator hoses and clamp bands 18
Precaution at overheating 18
Cleaning radiator core(outside) 18
Anti-freeze 19
AIR CLEANER 20
Cleaning Primary Air Filter Element 20
Evacuator valve 20

ENGLISH

For the air cleaner with a dust cup (optional) 20
Dust indicator (optional) 21
ELECTRIC WIRING 21
FAN BELT 21
Adjusting Fan Belt Tension 21
CARRIAGE AND STORAGE 22
CARRIAGE 22
STORAGE 22
TROUBLESHOOTING 23
SPECIFICATIONS 25
WIRING DIAGRAMS 26

SAFE OPERATION

Careful operation is your best assurance against an accident. Read and understand this section carefully before operating the engine. All operators, no matter how much experience they may have, should read this and other related manuals before operating the engine or any equipment attached to it. It is the owner's obligation to provide all operators with this information and instruct them on safe operation.

Be sure to observe the following for safe operation.

1. OBSERVE SAFETY INSTRUCTIONS

- Read and understand carefully this "OPERATOR'S MANUAL" and "LABELS ON THE ENGINE" before attempting to start and operate the engine.
- Learn how to operate and work safely. Know your equipment and its limitations. Always keep the engine in good condition.
- Before allowing other people to use your engine, explain how to operate and have them read this manual before operation.
- DO NOT modify the engine. UNAUTHORIZED MODIFICATIONS to the engine may impair the function and/or safety and affect engine life. If the engine does not perform properly, consult your local Kubota Engine Distributor first.

1AAACAAAP008B

2. WEAR SAFE CLOTHING AND PERSONAL PROTECTIVE EQUIPMENT (PPE)

- DO NOT wear loose, torn or bulky clothing around the machine that may catch on working controls and projections or into fans, pulleys and other moving parts causing personal injury.
- Use additional safety items-PPE, e.g. hard hat, safety protection, safety goggles, gloves, etc., as appropriate or required.
- DO NOT operate the machine or any equipment attached to it while under the influence of alcohol, medication, or other drugs, or while fatigued.
- DO NOT wear radio or music headphones while operating the engine.

1AEAAAAP0130

ENGLISH

3. CHECK BEFORE STARTING & OPERATING THE ENGINE

- Be sure to inspect the engine before operation. Do not operate the engine if there is something wrong with it. Repair it immediately.
- Ensure all guards and shields are in place before operating the engine. Replace any that are damaged or missing.
- Check to see that you and others are a safe distance from the engine before starting.
- Always keep the engine at least 3 feet (1 meter) away from buildings and other facilities.
- DO NOT allow children or livestock to approach the machine while the engine is running.
- DO NOT start the engine by shorting across starter terminals. The machine may start in gear and move. Do not bypass or defeat any safety devices.

1BAABADAP0010

4. KEEP THE ENGINE AND SURROUNDINGS CLEAN

- Be sure to stop the engine before cleaning.
- Keep the engine clean and free of accumulated dirt, grease and trash to avoid a fire. Store flammable fluids in proper containers and cabinets away from sparks and heat.
- Check for and repair leaks immediately.
- DO NOT stop the engine without idling; Allow the engine to cool down, first. Keep the engine idling for about 5 minutes before stopping unless there is a safety problem that requires immediate shut down.

1AEAAAAAP0120

5. SAFE HANDLING OF FUEL AND LUBRICANTS -KEEP AWAY FROM FIRE

- Always stop the engine before refueling and/or lubricating.
- DO NOT smoke or allow flames or sparks in your work area. Fuel is extremely flammable and explosive under certain conditions.
- Refuel at a well ventilated and open place. When fuel and/or lubricants are spilled, refuel after letting the engine cool down.
- DO NOT mix gasoline or alcohol with diesel fuel. The mixture can cause a fire or severe engine damage.
- Do not use unapproved containers e.g. buckets, bottles, jars. Use approved fuel storage containers and dispensers.

1AAACAAAP001A

6. EXHAUST GASES & FIRE PREVENTION

- Engine exhaust fumes can be very harmful if allowed to accumulate. Be sure to run the engine in a well ventilated location and where there are no people or livestock near the engine.
- The exhaust gas from the muffler is very hot. To prevent a fire, do not expose dry grass, mowed grass, oil or any other combustible materials to exhaust gas. Keep the engine and muffler clean at all times.
- To avoid a fire, be alert for leaks of flammable substances from hoses and lines. Be sure to check for leaks from hoses or pipes, such as fuel and hydraulic fluid by following the maintenance check list.
- To avoid a fire, do not short across power cables and wires. Check to see that all power cables and wirings are in good condition. Keep all electrical connections clean. Bare wire or frayed insulation can cause a dangerous electrical shock and personal injury.

7. ESCAPING FLUID

- Relieve all pressure in the air, the oil and the cooling systems before disconnecting any lines, fittings or related items.
- Be cautious of possible pressure relief when disconnecting any device from a pressurized system that utilizes pressure. DO NOT check for pressure leaks with your hand. High pressure oil or fuel can cause personal injury.
- Escaping fluid under pressure has sufficient force to penetrate skin causing serious personal injury.
- Fluid escaping from pinholes may be invisible. Use a piece of cardboard or wood to search for suspected leaks: do not use hands and body. Use safety goggles or other eye protection when checking for leaks.
- If injured by escaping fluid, see a medical doctor immediately. This fluid can produce gangrene or severe allergic reaction.

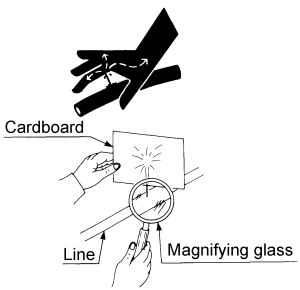

1ABAAAAAP120F

ENGLISH

8. CAUTIONS AGAINST BURNS & BATTERY EXPLOSION

- To avoid burns, be cautious of hot components, e.g. muffler, muffler cover, radiator, hoses, engine body, coolants, engine oil, EGR, etc. during operation and after the engine has been shut off.
- DO NOT remove the radiator cap while the engine is running or immediately after stopping. Otherwise hot water will spout out from the radiator. Wait until the radiator is completely cool to the touch before removing the cap. Wear safety goggles.
- Be sure to close the coolant drain valve, secure the pressure cap, and fasten the pipe band before operating. If these parts are taken off, or loosened, it will result in serious personal injury.
- The battery presents an explosive hazard. When the battery is being charged, hydrogen and oxygen gases are extremely explosive.
- DO NOT use or charge the battery if its fluid level is below the LOWER mark.
  Otherwise, the component parts may deteriorate earlier than expected, which may shorten the service life or cause an explosion. Immediately, add distilled water until the fluid level is between the UPPER and LOWER marks.
- Keep sparks and open flames away from the battery, especially during charging. DO NOT strike a match near the battery.
- DO NOT check the battery charge by placing a metal object across the terminals. Use a voltmeter or hydrometer.
- DO NOT charge a frozen battery. There is a risk of explosion. When frozen, warm the battery up to at least 16°C (61°F).

1AEABAAAP0080

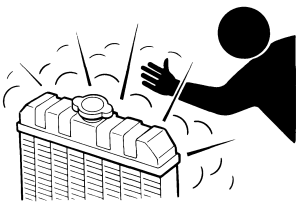
1AAAAABAP0230

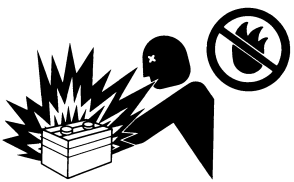
1ARAEAAAP0520

9. KEEP HANDS AND BODY AWAY FROM ROTATING PARTS

- Be sure to stop the engine before checking or adjusting the belt tension and cooling fan.
- Keep your hands and body away from rotating parts, such as the cooling fan, V-belt, fan drive pulley or flywheel. Contact with rotating parts can cause severe personal injury.
- DO NOT run the engine without safety guards. Install safety guards securely before operation.

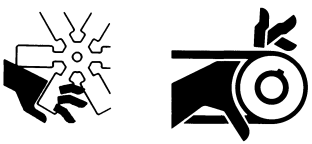
1ABAAAAAP1470

10.ANTI-FREEZE & DISPOSAL OF FLUIDS

- Anti-freeze contains poison. Wear rubber gloves to avoid personal injury. In case of contact with skin, wash it off immediately.
- DO NOT mix different types of Anti-freeze. The mixture can produce a chemical reaction causing harmful substances. Use approved or genuine KUBOTA Anti-freeze.
- Be mindful of the environment and the ecology. Before draining any fluids, determine the correct way to dispose of them. Observe the relevant environmental protection regulations when disposing of oil, fuel, coolant, brake fluid, filters and batteries.
- When draining fluids from the engine, place a suitable container underneath the engine body.
- DO NOT pour waste onto the ground, down a drain, or into any water source. Dispose of waste fluids according to environmental regulations.

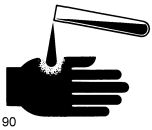

1BJABAAAP0190

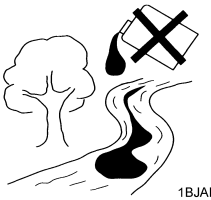

1BJABAAAP0180

11.CONDUCTING SAFETY CHECKS & MAINTENANCE

- When inspecting the engine or servicing, place the engine on a large flat surface. DO NOT work on anything that is supported ONLY by lift jacks or a hoist. Always use blocks or the correct stands to support the engine before servicing.
- Disconnect the battery from the engine before conducting service. Put a "DO NOT OPERATE!" tag on the key switch to avoid accidental starting.
- To avoid sparks from an accidental short circuit always disconnect the battery's ground cable (-) first and reconnect it last.
- Be sure to stop the engine and remove the key when conducting daily and periodic maintenance, service and cleaning.
- Check or conduct maintenance after the engine, coolant, muffler, or muffler cover have cooled off completely.
- Always use the appropriate tools and fixtures. Verify that they are in good condition before performing any service work. Make sure you understand how to use them before service.
- Use ONLY correct engine barring techniques for manually rotating the engine. DO NOT attempt to rotate the engine by pulling or prying on the cooling fan and V-belt. This practice can cause serious personal injury or premature damage to the cooling fan and belt.

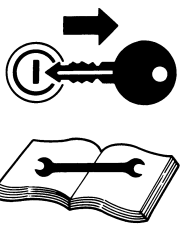

1BJABAAAP0200

- Replace fuel pipes and lubricant pipes with their hose clamps every 2 years or earlier whether they are damaged or not. They are made of rubber and age gradually.
- When servicing is performed together by two or more persons, take care to perform all work safely.
- Keep a first aid kit and fire extinguisher handy at all times.

12. WARNING AND CAUTION LABELS

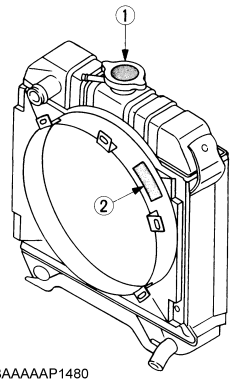

1ABAAAAAP1480

① Part No.19077-8724-1 or 16667-8724-1
(55mm in diameter) (37mm in diameter)

1ABACAAAP036K

② Part No.TA040-4957-1
Stay clear of engine
fan and fan belt

1AGAMAAAP2620

13. CARE OF WARNING AND CAUTION LABELS

1. Keep warning and caution labels clean and free from obstructing material.
2. Clean warning and caution labels with soap and water, dry with a soft cloth.
3. Replace damaged or missing warning and caution labels with new labels from your local KUBOTA dealer.
4. If a component with warning and caution label(s) affixed is replaced with a new part, make sure the new label(s) is (are) attached in the same location(s) as the replaced component.
5. Mount new warning and caution labels by applying to a clean dry surface and pressing any bubbles to the outside edge.

SERVICING OF THE ENGINE

Your dealer is interested in your new engine and has the desire to help you get the most value from it. After reading this manual thoroughly, you will find that you can do some of the regular maintenance yourself.
However, when in need of parts or major service, be sure to see your KUBOTA dealer.
For service, contact the KUBOTA Dealership from which you purchased your engine or your local KUBOTA dealer.
When in need of parts, be prepared to give your dealer the engine serial number.
Locate the serial number now and record them in the space provided.

	Type	Serial No.
Engine		
Date of Purchase		
Name of Dealer		
(To be filled in by purchaser)		

[V2607-DI-T-E3-B]

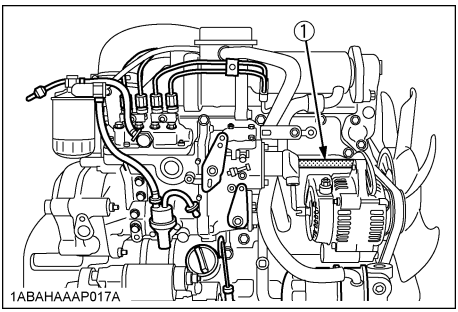

[V3307-DI-T-E3-B]

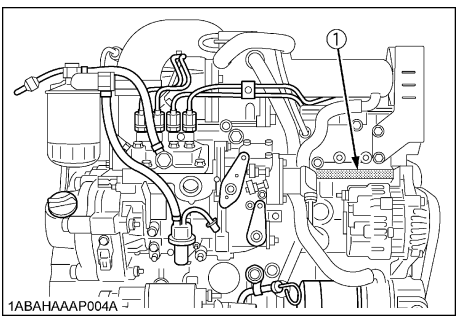

(1) Engine serial number

ENGLISH

NAMES OF PARTS

[V2607-DI-T-E3-B]

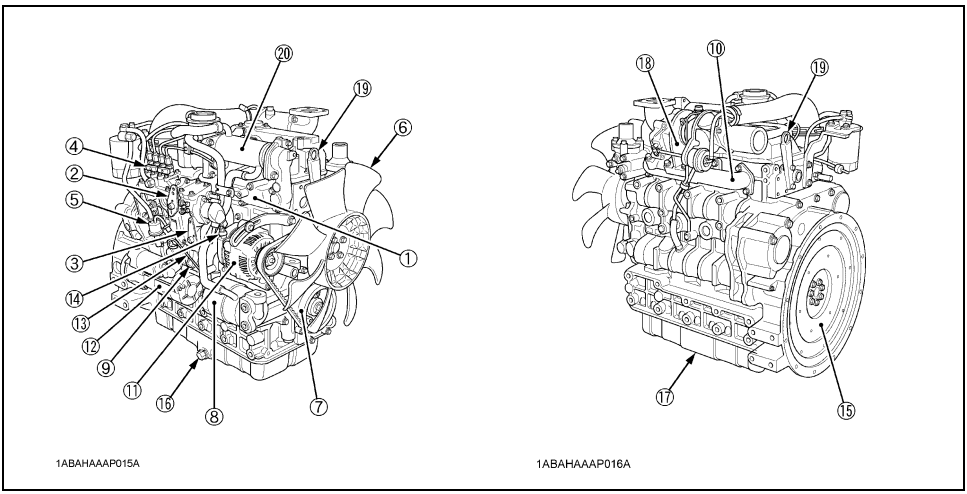

[V3307-DI-T-E3-B]

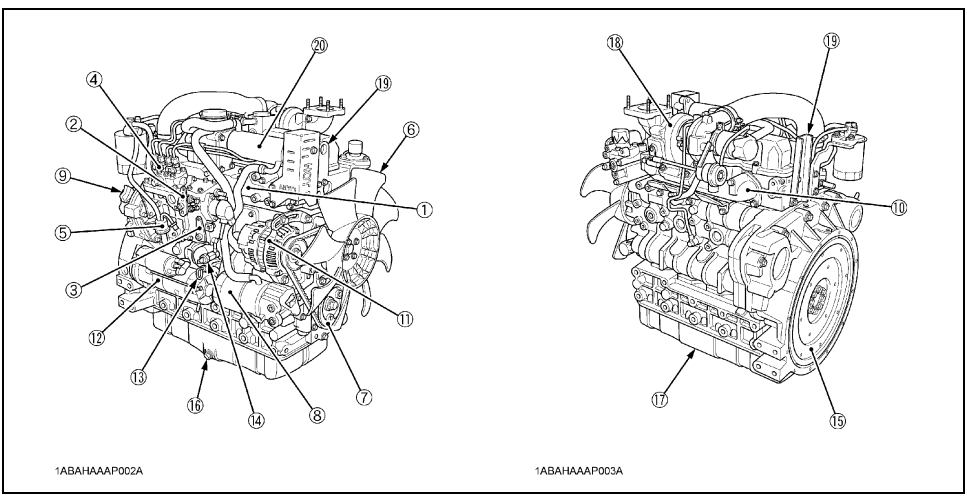

(1) Intake manifold
(2) Speed control lever
(3) Engine stop lever
(4) Injection pump
(5) Fuel feed pump
(6) Cooling fan
(7) Fan drive pulley
(8) Oil filter cartridge
(9) Oil filler plug
(10) Exhaust manifold
(11) Alternator
(12) Starter
(13) Oil level gauge
(14) Oil pressure switch
(15) Flywheel
(16) Oil drain plug
(17) Oil pan
(18) Turbo charger
(19) Engine hook
(20) EGR cooler

PRE-OPERATION CHECK

BREAK-IN

During the engine break-in period, observe the following by all means:

1. Change engine oil and oil filter cartridge after the first 50 hours of operation (See "**ENGINE OIL**" in "**PERIODIC SERVICE**" Section).
2. When ambient temperature is low, operate the machine after the engine has been completely warmed up.

DAILY CHECK

To prevent trouble from occurring, it is important to know the conditions of the engine well. Check it before starting.

CAUTION

To avoid personal injury:

- **Be sure to install shields and safeguards attached to the engine when operating.**
- **Stop the engine at a flat and wide space when checking.**
- **Keep dust or fuel away from the battery, wiring, muffler and engine to prevent a fire. Check and clear them before operating everyday. Pay attention to the heat of the exhaust pipe or exhaust gas so that it can not ignite trash.**

Item		Ref. page
1. Parts which had trouble in previous operation		-
2. By walking around the machine	(1) Oil or water leaks	14, 16
	(2) Engine oil level and contamination	14
	(3) Amount of fuel	11
	(4) Amount of coolant	17
	(5) Dust in air cleaner dust cup	20
	(6) Damaged parts and loosened bolts and nuts	-
3. By inserting the key into the starter switch	(1) Proper functions of meters and pilot lamps; no stains on these parts	-
	(2) Proper function of glow lamp timer	-
4. By starting the engine	(1) Color of exhaust fumes	7
	(2) Unusual engine noise	7

ENGLISH

OPERATING THE ENGINE

STARTING THE ENGINE(NORMAL)

CAUTION

To avoid personal injury:

- **Do not allow children to approach the machine while the engine is running.**
- **Be sure to install the machine on which the engine is installed, on a flat place.**
- **Do not run the engine on gradients.**
- **Do not run the engine in an enclosed area. Exhaust gas can cause air pollution and exhaust gas poisoning.**
- **Keep your hands away from rotating parts (such as fan, pulley, belt, flywheel etc.) during operation.**
- **Do not operate the machine while under the influence of alcohol or drugs.**
- **Do not wear loose, torn or bulky clothing around the machine. It may catch on moving parts or controls, leading to the risk of accident. Use additional safety items, e.g. hard hat, safety boots or shoes, eye and hearing protection, gloves, etc., as appropriate or required.**
- **Do not wear radio or music headphones while operating engine.**
- **Check to see if it is safe around the engine before starting.**
- **Reinstall safeguards and shields securely and clear all maintenance tools when starting the engine after maintenance.**

IMPORTANT :

- Do not use ether or any starting fluid for starting the engine, or a severe damage will occur.
- When starting the engine after a long storage (of more than 3 months), first set the stop lever to the "STOP" position and then activate the starter for about 10 seconds to allow oil to reach every engine part.

1. **Set the fuel lever to the "ON" position.**

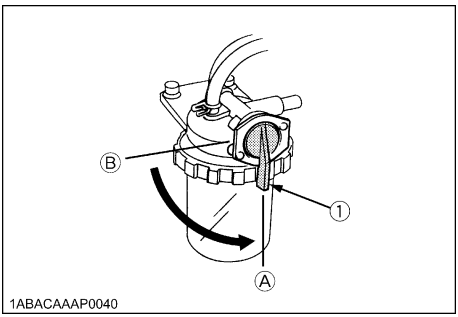

(1) Fuel lever
(A) "ON"
(B) "OFF"

2. **Place the engine stop lever to the "START" position.**
3. **Place the speed control lever at more than half "OPERATION".**

[V2607-DI-T-E3-B]

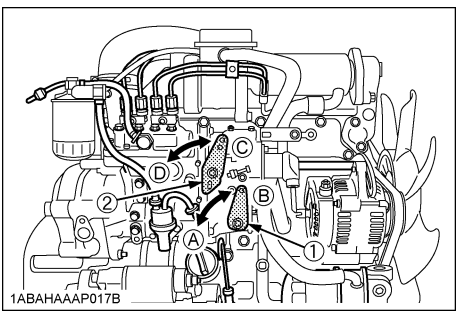

[V3307-DI-T-E3-B]

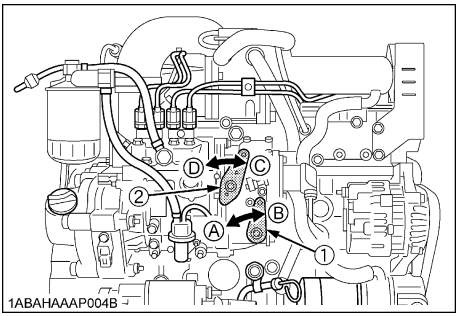

(1) Engine stop lever
(2) Speed Control lever

(A) "STOP"
(B) "START"
(C) "IDLING"
(D) "OPERATION"

4. Insert the key into the key switch and turn it "ON".

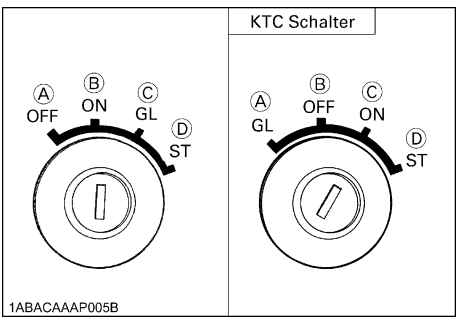

(A) "SWITCHED OFF"
(B) "OPERATION"
(C) "PREHEATING"
(D) "STARTING"

(A) "PREHEATING"
(B) "SWITCHED OFF"
(C) "OPERATION"
(D) "STARTING"

5. Turn the starter switch to the "PREHEATING" position to allow the glow lamp to redden.

NOTE :
(with lamp timer in use)
- The glow lamp goes out in about 5 seconds when the lamp timer is up. Refer to this for pre-heating. Even with the glow lamp off, the glow plug can be pre-heated by turning the starter switch to the "PREHEATING" position.

6. Turn the key to the "STARTING" position and the engine should start. Release the key immediately when the engine starts.

7. Check to see that the oil pressure lamp and charge lamp are off. If the lamps are still on, immediately stop the engine, and determine the cause.
(See "**CHECKS DURING OPERATION**" in "**OPERATING THE ENGINE**" Section)

NOTE :
- If the oil pressure lamp should be still on, immediately stop the engine and check;
  - if there is enough engine oil.
  - if the engine oil has dirt in it.
  - if the wiring is faulty.

8. Warm up the engine at medium speed without load.

IMPORTANT :
- If the glow lamp should redden too quickly or too slowly, immediately ask your KUBOTA dealer to check and repair it.
- If the engine does not catch or start at 10 seconds after the starter switch is set at "STARTING" position, wait for another 30 seconds and then begin the engine starting sequence again. Do not allow the starter motor to run continuously for more than 20 seconds.

COLD WEATHER STARTING

If the ambient temperature is below -5°C(23°F)* and the engine is very cold, start it in the following manner:
Take steps (1) through (4) above.

5. Turn the key to the "PREHEATING (GLOW)" position and keep it there for a certain period mentioned below.

IMPORTANT :
- Shown below are the standard preheating times for various temperatures. This operation, however, is not required, when the engine is warmed up.

Ambient temperature	Preheating time
Above 10°C (50°F)	NO NEED
10°C (50°F) to -5°C (23°F)	Approx. 5 seconds
*Below -5°C (23°F)	Approx. 10 seconds
Limit of continuous use	20 seconds

6. **Turn the key to the "ST (STARTING)" position and the engine should start.**
   (If the engine fails to start after 10 seconds, turn off the key for 5 to 30 seconds. Then repeat steps (5) and (6).)

IMPORTANT :
- Do not allow the starter motor to run continuously for more than 20 seconds.
- Be sure to warm up the engine, not only in winter, but also in warmer seasons. An insufficiently warmed-up engine can shorten its service life.
- When there is fear of temperature dropping below -15°C (5°F) detach the battery from the machine, and keep it indoors in a safe area, to be reinstalled just before the next operation.

STOPPING THE ENGINE

1. **Return the speed control lever to low idle and run the engine under idling conditions.**

IMPORTANT :
- If equipped with a turbo-charger, allow the engine to idle for 5 minutes before shutting it off after a full load operation.
  Failure to do so may lead to turbo-charger trouble.

2. **The engine should stop with the starter switch placed at the "OFF" position. (In case of non-stopping, set the engine stop lever to the "STOP" position manually.)**

3. **After stopping the engine, remove the key. (Be sure to return the engine stop lever to the "START" position to be ready for the next starting in case of manually stopping.)**

[V2607-DI-T-E3-B]

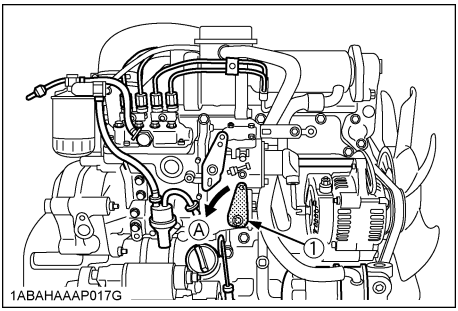

[V3307-DI-T-E3-B]

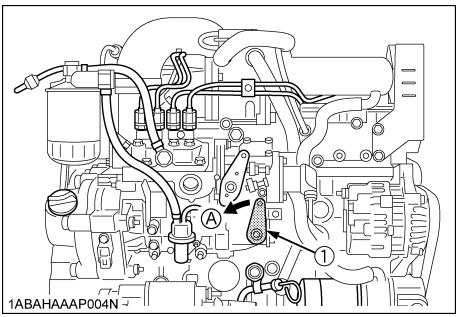

(1) Engine stop lever (A) "STOP"

CHECKS DURING OPERATION

While running, make the following checks to see that all parts are working correctly.

■Radiator Cooling water(Coolant)

WARNING

To avoid personal injury:
- **Do not remove radiator cap until coolant temperature is well below its boiling point. Then loosen cap slightly to the stop position, to relieve any pressure, before removing cap completely.**

If the coolant temperature warning lamp lights up or if steam or coolant does not stop squirting from the radiator overflow pipe, turn off the load and **keep the engine idling (COOLING-DOWN) for at least 5 minutes** to let it cool down gradually. Then stop the engine and take the following inspection and servicing.

1. Check to see if the coolant runs short or if there is any coolant leak;
2. Check to see if there is any obstacle around the cooling air inlet or outlet;
3. Check to see if there is any dirt or dust between radiator fins and tube;
4. Check to see if the fan belt is too loose; and
5. Check to see if radiator water pipe is clogged.

■Oil pressure lamp

The lamp lights up to warn the operator that the engine oil pressure has dropped below the prescribed level. If this should happen during operation or should not go off even after the engine is accelerated more than 1000rpm, immediately stop the engine and check the following:

1. Engine oil level (See "**ENGINE OIL**" in "**MAINTENANCE**" Section).

■Charge lamp

The lamp lights up to warn the operator that the battery charge is low. If this should happen during operation, immediately stop the engine and check the following:

1. Cable broken
2. Poor connection at alternator terminal
3. Fan belt too loose or damaged

■Fuel

WARNING

To avoid personal injury:

- **Fluid escaping from pinholes may be invisible. Do not use hands to search for suspected leaks; Use a piece of cardboard or wood, instead. If injured by escaping fluid, see a medical doctor at once. This fluid can produce gangrene or a severe allergic reaction.**
- **Check any leaks from fuel pipes or fuel injection pipes. Use eye protection when checking for leaks.**

Be careful not to empty the fuel tank. Otherwise air may enter the fuel system, requiring fuel system bleeding. (See "**FUEL**" in Periodic service Section).

■Color of exhaust

While the engine is run within the rated output range:

- The color of exhaust remains colorless.
- If the output slightly exceeds the rated level, exhaust may become a little colored with the output level kept constant.
- If the engine is run continuously with dark exhaust emission, it may lead to trouble with the engine.

■Immediately stop the engine if;

- The engine suddenly slows down or accelerates.
- Unusual noises are suddenly heard.
- Exhaust fumes suddenly become very dark.
- The oil pressure lamp or the water temperature alarm lamp lights up.

REVERSED ENGINE REVOLUTION AND REMEDIES

CAUTION

To avoid personal injury:

- **Reversed engine operation can make the machine reverse and run it backwards. It may lead to serious trouble.**
- **Reversed engine operation may make exhaust gas gush out into the intake side and ignite the air cleaner; It could catch fire.**

Reversed engine revolution must be stopped immediately since engine oil circulation is cut quickly, leading to serious trouble.

■How to tell when the engine starts running backwards

1. Lubricating oil pressure drops sharply. Oil pressure warning light, if used, will light.
2. Since the intake and exhaust sides are reversed, the sound of the engine changes, and exhaust gas will come out of the air cleaner.
3. A louder knocking sound will be heard when the engine starts running backwards.

■Remedies

1. Immediately set the engine stop lever to the "STOP" position to stop the engine.
2. After stopping the engine, check the air cleaner, intake rubber tube and other parts, and then replace parts as needed.

ENGLISH

MAINTENANCE

CAUTION

To avoid personal injury:

- **Be sure to conduct daily checks, periodic maintenance, refueling or cleaning on a level surface with the engine shut off and remove the key.**
- **Before allowing other people to use your engine, explain how to operate, and have them read this manual before operation.**
- **When cleaning any parts, do not use gasoline but use regular cleanser.**
- **Always use proper tools, that are in good condition. Make sure you understand how to use them, before performing any service work.**
- **When installing, be sure to tighten all bolts lest they should be loose. Tighten the bolts by the specified torque.**
- **Do not put any tools on the battery, or battery terminals may short out. Severe burns or fire could result. Detach the battery from the engine before maintenance.**
- **Do not touch muffler or exhaust pipes while they are hot; Severe burns could result.**

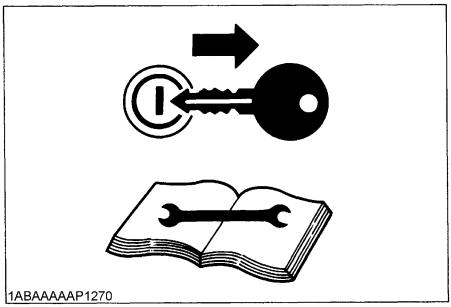
1ABAAAAAP1270

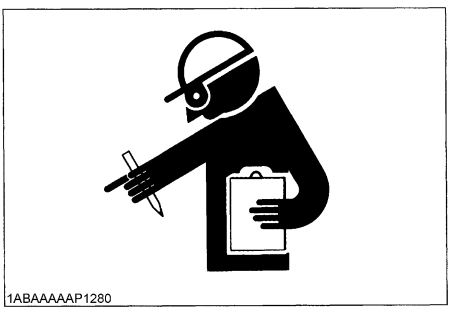
1ABAAAAAP1280

SERVICE INTERVALS

Observe the following for service and maintenance.

No.	Item	Interval						Ref.page		
		100	200	250	300	400	500			
1	Check of fuel pipes and clamp bands							13	◎	@
2	Cleaning of air cleaner element			○			○	20	*1	@
3	Cleaning of fuel filter			○			○	13		
4	Check of fan belt tightness			○			○	21		
5	Check of radiator hoses and clamp bands			○			○	18		
6	Check of intake air line			○			○	-		@
7	Replacing the oil filter cartridge						○	16	◎	
8	Replacement of fuel filter cartridge						○	14		@
9	Removal of sediment in fuel tank						○	-		
10	Cleaning of water jacket (radiator interior)						○	17		
11	Replacement of fan belt						○	21		
12	Check of valve clearance	Every 1000 hours						23		
13	Check of fuel injection nozzle injection pressure	Every 1500 hours						-	*3	@
14	Check of turbo charger	Every 3000 hours						-	*3	@
15	Check of injection pump	Every 3000 hours						-	*3	@
16	Replacement of air cleaner element	Every one years						20	*2	@
17	Change of radiator coolant (L.L.C.)	Every two years						17		
18	Replacement of radiator hoses and clamp bands	Every two years						18		
19	Replacement of fuel pipes and clamp bands	Every two years						13	*3	@
20	Replacement of intake air line	Every two years						-	*4	@
21	Changing engine oil	See NOTE						15	◎	

IMPORTANT :

- The jobs indicated by ◎ must be done after the first 50 hours of operation.

*1 Air cleaner should be cleaned more often in dusty conditions than in normal conditions.
*2 After 6 times of cleaning.
*3 Consult your local KUBOTA Dealer for this service.
*4 Replace only if necessary.

- The items listed above (@ marked) are registered as emission related critical parts by KUBOTA in the U.S. EPA nonroad emission regulation. As the engine owner, you are responsible for the performance of the required maintenance on the engine according to the above instruction.
  Please see the Warranty Statement in detail.

NOTE :

- **Changing interval of engine oil**

Models	Interval
V2607-DI-T-E3-B, V3307-DI-T-E3-B	500 Hrs or 1 year whichever comes first
Initial	50 Hrs

- API service classification: above CF grade
- Ambient temperature: below 35°C (95°F)

NOTE :

Lubricating oil

With the emission control now in effect, the CF-4 and CI-4 lubricating oils have been developed for use of a low-sulfur fuel on on-road vehicle engines.

- **Lubricating oil recommended when a low-sulfur or high-sulfur fuel is employed.**

  ○ : Recommendable - : Not recommendable

Lubricating oil class	Fuel		Remarks
	Low sulfur	High sulfur	
CF	○	-	*TBN≧10
CI-4	○	-	

* TBN: Total Base Number

- Oil used in the engine should have an American Petroleum Institute (API) service classification and Proper SAE Engine Oil according to the ambient temperatures as shown below:

Above 25°C (77°F)	SAE30, SAE10W-30 or 15W-40
-10°C to 25°C (14°F to 77°F)	SAE10W-30 or 15W-40
Below -10°C (14°F)	SAE10W-30

- Recommended API categorization
  Third Stage Exhaust Emissions Regulations Specification.

Fuel used	Engine oil grade
Ultra Low Sulfur Fuel (< 15 ppm)	CF or CI-4 (Class CF-4, CG-4 and CH-4 engine, oils cannot be used on EGR type engines)

EGR: Exhaust Gas Re-circulation

- The CJ-4 engine oil is intended for DPF (Diesel Particulate Filter) type engines

PERIODIC SERVICE

FUEL

Fuel is flammable and can be dangerous. You should handle fuel with care.

CAUTION

To avoid personal injury:

- **Do not mix gasoline or alcohol with diesel fuel. This mixture can cause an explosion.**
- **Be careful not to spill fuel during refueling. If fuel should spill, wipe it off at once, or it may cause a fire.**
- **Do not fail to stop the engine before refueling. Keep the engine away from the fire.**
- **Be sure to stop the engine while refueling or bleeding and when cleaning or changing fuel filter or fuel pipes. Do not smoke when working around the battery or when refueling.**
- **Check the above fuel systems at a well ventilated and wide place.**
- **When fuel and lubricant are spilled, refuel after letting the engine cool off.**
- **Always keep spilled fuel and lubricant away from engine.**

■Fuel level check and refueling

1. Check to see that the fuel level is above the lower limit of the fuel level gauge.
2. If the fuel is too low, add fuel to the upper limit. Do not overfill.

- No.2-D is a distillate fuel oil of lower volatility for engines in industrial and heavy mobile service. (SAE J313 JUN87)
- Diesel fuels specified to EN 590 or ASTM D975 are recommended.

Flash Point, °C (°F)	Water and Sediment, volume %	Carbon Residue on, 10 percent Residuum, %	Ash, weight %
Min	Max	Max	Max
52 (125)	0.05	0.35	0.01

Distillation Temperatures, °C(°F) 90% Point		Viscosity Kinematic cSt or mm^2/s at 40°C		Viscosity Saybolt, SUS at 37.8°C (100°F)		Sulfur, weight %	Copper Strip Corrosion	Cetane Number
Min	Max	Min	Max	Min	Max	Max	Max	Min
282 (540)	338 (640)	1.9	4.1	32.6	40.1	0.50	No. 3	40

- Cetane number of 45 minimum. Cetane number greater than 50 is preferred, especially for temperatures below -20°C (-4°F) or elevations above 1500 m (5000 ft).
- If diesel fuel with sulfur content greater than 0.5 % sulfur content is used, reduce the service interval for engine oil and filter by 50%.
- DO NOT use diesel fuel with sulfur content greater than 1.0%.
- This engine conforms to EPA Tier 4 and Interim Tier 4. The law specifies the use of ultra low sulfur fuel at EPA regulated area (North America). To comply with this law, use No.1-D S15 diesel fuel as an alternative to No.1-D when the temperature is below -10°C (-14°F).

IMPORTANT :

- Be sure to use a strainer when filling the fuel tank, or dirt or sand in the fuel may cause trouble in the fuel injection pump.
- For fuel, always use diesel fuel. You are required not to use alternative fuel, because its quality is unknown or it may be inferior in quality. Kerosene, which is very low in cetane rating, adversely affects the engine. Diesel fuel differs in grades depending on the temperature.
- Be careful not to let the fuel tank become empty, or air can enter the fuel system, necessitating bleeding before next engine start.

■Air bleeding the fuel system

CAUTION

To avoid personal injury;

- **Do not bleed a hot engine as this could cause fuel to spill onto a hot exhaust manifold creating a danger of fire.**

Air bleeding of the fuel system is required if;
- after the fuel filter and pipes have been detached and refitted;
- after the fuel tank has become empty; or
- before the engine is to be used after a long storage.

[PROCEDURE Ⓐ] (gravity feed fuel tanks only)
1. Fill the fuel tank to the fullest extent. Open the fuel filter lever.
2. Open the joint bolt on top of the fuel injection pump.
3. Turn the engine, continue it for about 10 seconds and then stop it, or move the fuel feed pump lever by hand (optional).
4. Close the joint bolt on top of the fuel injection pump.

IMPORTANT :
- Always keep the air vent cock on the fuel injection pump closed except when air is vented, or it may cause the engine to stop.

[GRAVITY FEED SYSTEM]
[V2607-DI-T-E3-B]

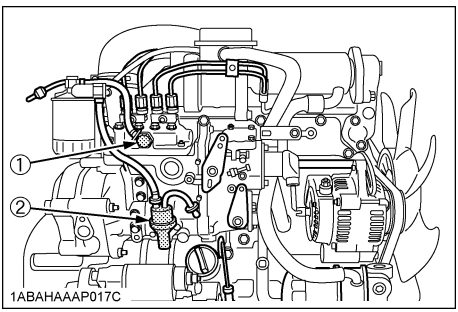

[V3307-DI-T-E3-B]

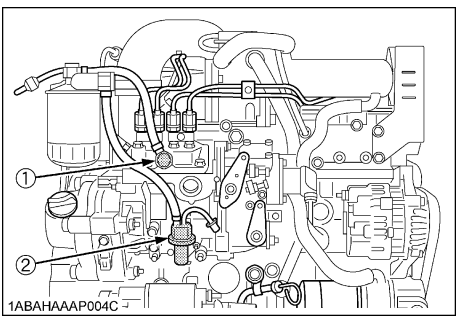

(1) Joint bolt
(2) Fuel feed pump

NOTE :
- For the engine equipped with automatic venting (optional) no manual bleeding of fuel lines is required.

[PROCEDURE Ⓑ] (fuel tanks lower than injection pump)
1. For fuel tanks that are lower than the injection pump. The fuel system must be pressurized by the fuel system electric fuel pump.
2. If an electric fuel pump is not used, you must manually actuate the pump by lever to bleed.
3. The primary fuel filter must be on the pressure side of the pump if the fuel tank is lower than the injection pump.
4. To bleed, follow (2) through (4) above.

IMPORTANT :
- Tighten air vent plug of the fuel injection pump except when bleeding, or it may stop the engine suddenly.

[TANK BELOW INJECTION PUMP SYSTEM]

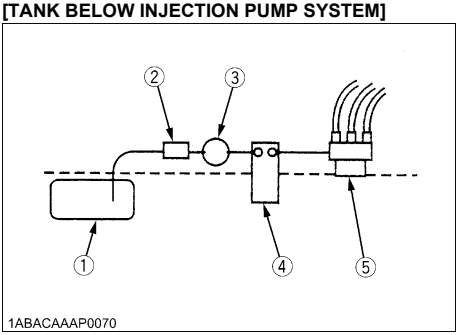

(1) Fuel tank below injection pump
(2) Pre-filter
(3) Electric or Mechanical pump
(4) Main Filter
(5) Injection pump

■Checking the fuel pipes

CAUTION

To avoid personal injury;

- **Check or replace the fuel pipes after stopping the engine. Broken fuel pipes can cause fires.**

Check the fuel pipes every 50 hours of operation. When if;

1. If the clamp band is loose, apply oil to the screw of the band, and tighten the band securely.
2. If the fuel pipes, made of rubber, become worn out, replace them and clamp bands every 2 years.
3. If the fuel pipes and clamp bands are found worn or damaged before 2 years' pass, replace or repair them at once.
4. After replacement of the pipes and bands, air-bleed the fuel system.

IMPORTANT :

- When the fuel pipes are not installed, plug them at both ends with clean cloth or paper to prevent dirt from entering. Dirt in the pipes can cause fuel injection pump malfunction.

[V2607-DI-T-E3-B]

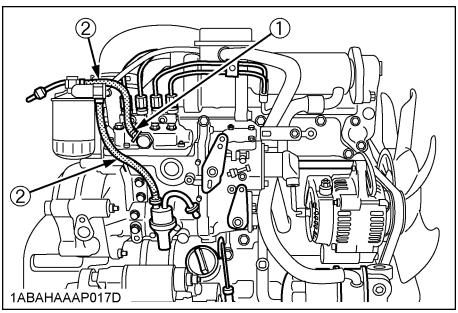

[V3307-DI-T-E3-B]

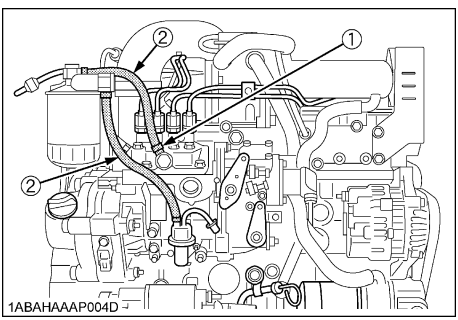

(1) Clamp band
(2) Fuel pipe

■Cleaning the fuel filter pot

Every 250 hours of operation, clean the fuel filter in a clean place to prevent dust intrusion.

1. Close the fuel filter lever.

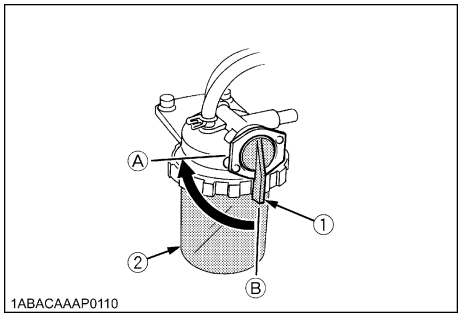

(1) Fuel filter lever (A) "OFF"
(2) Fuel filter pot (B) "ON"

2. Remove the top cap, and rinse the inside with diesel fuel.
3. Take out the element, and rinse it with diesel fuel.
4. After cleaning, reinstall the fuel filter, keeping out of dust and dirt.
5. Air-bleed the injection pump.

IMPORTANT :

- Entrance of dust and dirt can cause a malfunction of the fuel injection pump and the injection nozzle. Wash the fuel filter cup periodically.

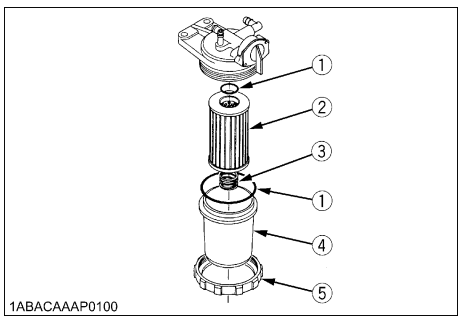

(1) O ring
(2) Filter element
(3) Spring
(4) Filter bowl
(5) Screw ring

■Fuel filter cartridge replacement

1. Replace the fuel filter cartridge with a new one every 500 operating hours.
2. Apply fuel oil thinly over the gasket and tighten the cartridge into position by hand-tightening only.
3. Finally, vent the air.

IMPORTANT :

- Replace the fuel filter cartridge periodically to prevent wear of the fuel injection pump plunger or the injection nozzle, due to dirt in the fuel.

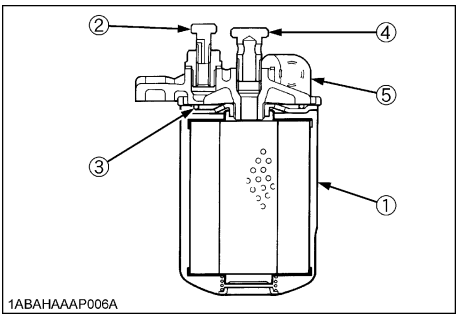

(1) Fuel filter cartridge
(2) Air vent plug
(3) O ring
(4) Pipe joint
(5) Cover

NOTE :

- The fuel filter cartridge and water separator should be replaced more earlier according to the fuel classification in use.

ENGINE OIL

CAUTION

To avoid personal injury:

- **Be sure to stop the engine before checking and changing the engine oil and the oil filter cartridge.**
- **Do not touch muffler or exhaust pipes while they are hot; Severe burns could result. Always stop the engine and allow it to cool before conducting inspections, maintenance, or for a cleaning procedure.**
- **Contact with engine oil can damage your skin. Put on gloves when using engine oil. If you come in contact with engine oil, wash it off immediately.**

IMPORTANT :

- Do not operate a diesel engine when engine oil is overfilled. This oil can drain through the air intake system, which cause engine disacceleration and oil leaks from breather pipings. It could result in a over-running or oil hammering of engine in case of the engine with suction blow-by gases breathed in.

■Checking oil level and adding engine oil

1. Check the engine oil level before starting or more than 5 minutes after stopping the engine.
2. Remove the oil level gauge, wipe it clean and reinstall it.
3. Take the oil level gauge out again, and check the oil level.

[V2607-DI-T-E3-B]

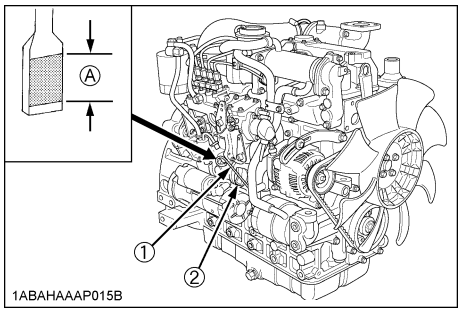

[V3307-DI-T-E3-B]

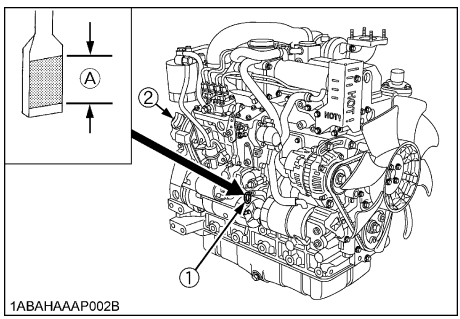

(1) Oil level gauge
(2) Oil filler plug

[Lower end of oil level gauge]
(A) Engine oil level within this range is proper.

4. If the oil level is too low, remove the oil filler plug, and add new oil to the prescribed level.
5. After adding oil, wait more than 5 minutes and check the oil level again. It takes some time for the oil to drain down to the oil pan.

Models	Engine oil quantity
V2607-DI-T-E3-B	10.2 L (2.24 U.S.gals.)
V3307-DI-T-E3-B	11.2 L (2.95 U.S.gals.)

*API service classification: above CF grade

IMPORTANT :

- Engine oil should be MIL-L-2104C or have properties of API classification CF grades or higher. Change the type of engine oil according to the ambient temperature.

above 25°C (77°F)	SAE30 or SAE10W-30 SAE15W-40
-10°C to 25°C (14°F to 77°F)	SAE10W-30 or SAE15W-40
below -10°C (14°F)	SAE10W-30

- When using oil of different brands from the previous one, be sure to drain all the previous oil before adding the new engine oil.

NOTE :

- Be sure to inspect the engine, locating it on a level place. If placed on gradients accurately,oil quantity may not be measured.

■Changing engine oil

CAUTION

To avoid personal injury:

- **Be sure to stop the engine before draining engine oil.**
- **When draining engine oil, place some container underneath the engine and dispose it according to local regulations.**
- **Do not drain oil after running the engine. Allow engine to cool down sufficiently.**

1. Change oil after the initial 50 hours of operation and every 500 hours thereafter.
   When the annual operating hours are below 500, replace the oil every year.
2. Remove the drain plug at the bottom of the engine, and drain all the old oil. Drain oil will drain easier when the oil is warm.
3. When letting out the oil, remove the filler plug too. With the filler plug still in place, it would be difficult to discharge the oil completely .

[V2607-DI-T-E3-B]

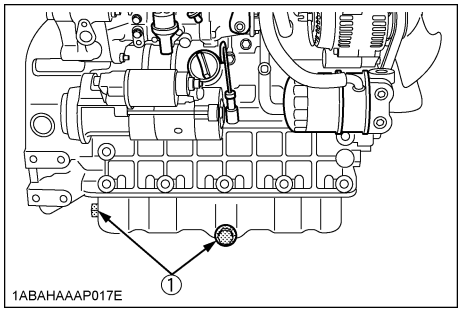

[V3307-DI-T-E3-B]

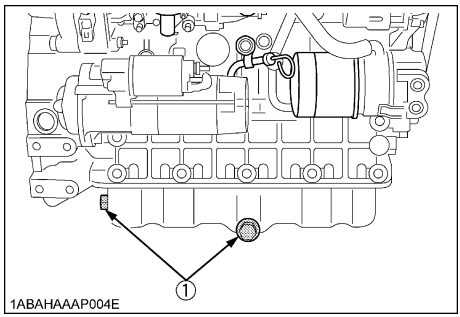

(1) Oil drain plug

4. Add new engine oil up to the upper limit of the oil level gauge. Be careful not to add oil above the upper limit of the oil level gauge.

■Replacing the oil filter cartridge

CAUTION

To avoid personal injury:

- **Be sure to stop the engine before changing the oil filter cartridge.**
- **Allow engine to cool down sufficiently, oil can be hot and cause burns.**

1. Replace the oil filter cartridge. Oil filter cartridge should be replaced, after the initial 50 hours of operation and every 500 hours thereafter.
2. Remove the old oil filter cartridge.
3. Apply a film of oil to the gasket for the new cartridge.
4. Screw in the cartridge by hand. When the gasket contacts the seal surface, tighten the cartridge enough by hand. Because, if you tighten the cartridge with a wrench, it will be tightened too much.

[V2607-DI-T-E3-B]

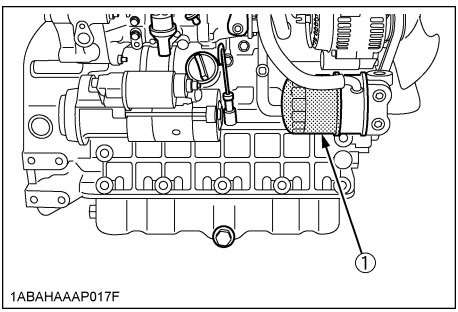

[V3307-DI-T-E3-B]

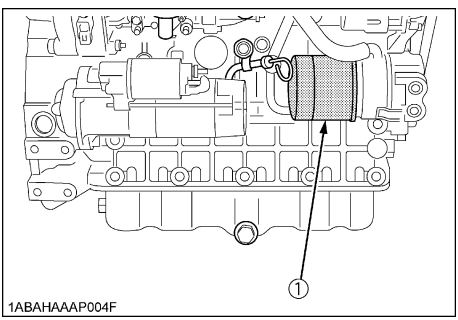

(1) Oil filter cartridge

5. After the new cartridge has been replaced, the engine oil level normally decreases a little. Thus, run the engine for a while and check for oil leaks through the seal before checking the engine oil level. Add oil if necessary.

NOTE :

- Wipe off any oil sticking to the machine completely.

RADIATOR

Coolant will last for one day's work if filled all the way up before operation start. Make it a rule to check the coolant level before every operation.

WARNING

To avoid personal injury:

- **Do not stop the engine suddenly, stop it after about 5 minutes of unloaded idling.**
- **Work only after letting the engine and radiator cool off completely (more than 30 minutes after it has been stopped).**
- **Do not remove the radiator cap while coolant is hot. When cool to the touch, rotate cap to the first stop to allow excess pressure to escape. Then remove cap completely.**
  If overheats should occur, steam may gush out from the radiator or recovery tank; Severe burns could result.

■Checking coolant level, adding coolant

1. Remove the radiator cap, after the engine has completely cooled, and check to see that coolant reaches the supply port.

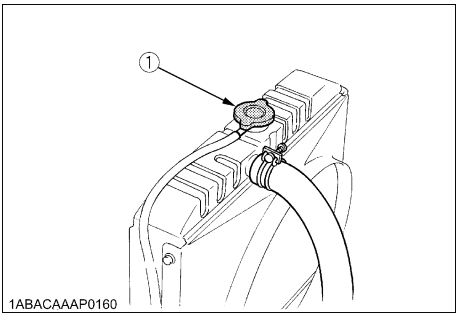

(1) Radiator pressure cap

2. If the radiator is provided with a recovery tank, check the coolant level of the recovery tank. When it is between the "FULL" and "LOW" marks, the coolant will last for one day's work.

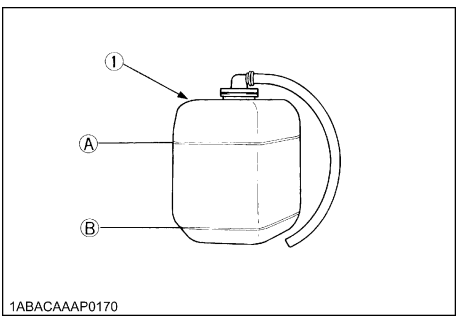

(1) recovery tank
(A) "FULL"
(B) "LOW"

3. When the coolant level drops due to evaporation, add water only up to the full level.
4. Check to see the drain cock; which is at the lower part of the radiator as figures below.

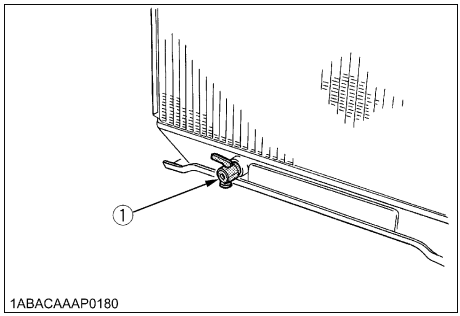

(1) Coolant drain cock

IMPORTANT :

- If the radiator cap has to be removed, follow the caution and securely retighten the cap.
- If coolant should be leak, consult your local KUBOTA dealer.
- Make sure that muddy or sea water does not enter the radiator.
- Use clean, fresh water and 50% anti-freeze to fill the recovery tank.
- Do not refill recovery tank with coolant over the "FULL" level mark.
- Be sure to close the radiator cap securely. If the cap is loose or improperly closed, coolant may leak out and decrease quickly.

■Changing coolant

1. To drain coolant, always open both drain cocks and simultaneously open the radiator cap as well. With the radiator cap kept closed, a complete drain of water is impossible.
2. Remove the overflow pipe of the radiator pressure cap to drain the recovery tank.
3. Prescribed coolant volume (U.S.gallons)

Models	Quantity
V2607-DI-T-E3-B	6.0 L (1.32 U.S.gals.)
V3307-DI-T-E3-B	6.3 L (1.67 U.S.gals.)

NOTE :

- Coolant quantities shown are for standard radiators.

4. An improperly tightened radiator cap or a gap between the cap and the seat quickens loss of coolant.
5. Check and clean the plug threads and surface and the packing of the water drain plug to prevent dirt and debris from the entering the engine.
6. Coolant (Radiator cleaner and anti-freeze)

Season	Coolant
All seasons	Pure water and anti-freeze (See **"Anti-freeze"** in RADIATOR section)

7. After flushing, fill with clean water and anti-freeze until the coolant level is just below the radiator cap. Install the radiator cap securely.
8. Fill with coolant up to the "FULL" mark of recovery tank.
9. Start and operate the engine for few minutes.
10. Stop the engine, remove the key and let cool.
11. Check coolant level of recovery tank and add coolant if necessary.

■Remedies for quick decrease of coolant

1. Check any dust and dirt between the radiator fins and tube. If any, remove them from the fins and the tube.
2. Check the tightness of the fan belt. If loose, tighten it securely.
3. Check the internal blockage in the radiator hose. If scale forms in the hose, clean with the scale inhibitor or its equivalent.

■Checking radiator hoses and clamp bands

CAUTION

To avoid personal injury:

- **Be sure to check radiator hoses and clamp bands periodically. If radiator hose is damaged or coolant leaks, overheats or severe burns could occur.**

Check to see if radiator hoses are properly fixed every 250 hours of operation or 6 months, whichever comes first.

1. If clamp bands are loose or water leaks, tighten hose clamp securely.
2. Replace hoses and tighten clamp bands securely, if radiator hoses are swollen, hardened or cracked.

Replace hoses and clamp bands every 2 years or earlier, if checked and found that hoses are swollen, hardened or cracked.

■Precaution at overheating

The event that the coolant temperature is nearly or more than the boiling point is called **"OVERHEATING"**.
While running, make the following checks to see that all parts are working correctly. **If anything is unusual, inspect it, referring to the relevant description in "MAINTENANCE" and "PERIODIC SERVICE" section**.

◆ Coolant

If the coolant temperature warning lamp lights up or if steam or coolant does not stop squirting from the radiator overflow pipe, turn off the load and **keep the engine idling (COOLING-DOWN) for at least 5 minutes** to let it cool down gradually. Then stop the engine and take the following inspection and servicing.

1. Check to see if the coolant runs short or if there is any coolant leak;
2. Check to see if there is any obstacle around the cooling air inlet or outlet;
3. Check to see if there is any dirt or dust between radiator fins and tube;
4. Check to see if the fan belt is too loose; and
5. Check to see if radiator water pipe is clogged.

■Cleaning radiator core(outside)

If dust is between the fin and tube, wash it away with running water.

IMPORTANT :

- Do not clean radiator with firm tools such as spatulas or screwdrivers. They may damage specified fin or tube. It can cause coolant leaks or decrease cooling performance.

■Anti-freeze

CAUTION

To avoid personal injury:

- When using anti-freeze, put on some protection such as rubber gloves (Anti-freeze contains poison.).
- If should drink anti-freeze, throw up at once and take medical attention.
- When anti-freeze comes in contact with the skin or clothing, wash it off immediately.
- Do not mix different types of anti-freeze. The mixture can produce chemical reaction causing harmful substances.
- Anti-freeze is extremely flammable and explosive under certain conditions. Keep fire and children away from anti-freeze.
- When draining fluids from the engine, place some container underneath the engine body.
- Do not pour waste onto the grounds, down a drain, or into any water source.
- Also, observe the relevant environmental protection regulations when disposing of anti-freeze.

Always use a 50/50 mix of long-life coolant and clean soft water in KUBOTA engines.
Contact KUBOTA concerning coolant for extreme conditions.

1. Long-life coolant (hereafter LLC) comes in several types. Use ethylene glycol (EG) type for this engine.
2. Before employing LLC-mixed cooling water, flush the radiator with fresh water. Repeat this procedure 2 or 3 times to clean up the radiator and engine block from inside.
3. Mixing the LLC
   Premix 50% LLC with 50% clean soft water. When mixing, stir it up well, and then fill into the radiator.
4. The procedure for the mixing of water and anti-freeze differs according to the make of the anti-freeze. Refer to SAE J1034 standard, more specifically also to SAE J814c.

Vol % Anti-freeze	Freezing Point		Boiling Point *	
	°C	°F	°C	°F
50	-37	-34	108	226

*At 1.013×10^5 Pa (760 mmHg) pressure (atmospheric). A higher boiling point is obtained by using a radiator pressure cap which permits the development of pressure within the cooling system.

5. Adding the LLC
   (1) Add only water if the coolant level reduces in the cooling system by evaporation.
   (2) If there is a coolant leak, add the LLC of the same manufacturer and type in the same coolant percentage.
   *Never add any long-life coolant of different manufacturer. (Different brands may have different additive components, and the engine may fail to perform as specified.)
6. When the LLC is mixed, do not employ any radiator cleaning agent. The LLC contains anti-corrosive agent. If mixed with the cleaning agent, sludge may build up, adversely affecting the engine parts.
7. Kubota's genuine long-life coolant has a service life of 2 years. Be sure to change the coolant every 2 years.

NOTE :

- The above data represent industry standards that necessitate a minimum glycol content in the concentrated anti-freeze.

AIR CLEANER

Since the air cleaner employed on this engine is a dry type, never apply oil to it.

1. Open the evacuator valve once a week under ordinary conditions - or daily when used in a dusty place. This will get rid of large particles of dust and dirt.
2. Wipe the inside air cleaner clean with cloth if it is dirty or wet.
3. Avoid touching the primary element except when cleaning.
4. When dry dust adheres to the element, blow compressed air from the inside turning the element. Pressure of compressed air must be under 205kPa (2.1kgf/cm^2, 30psi).
5. Replace the primary element every year or every 6 cleanings. If the primary element is stained heavily, replace it soon. At this time, replace the secondary element too.
6. The secondary element should be removed only if it is to be replaced.
7. To protect the engine, do not remove the secondary element in servicing the primary element.

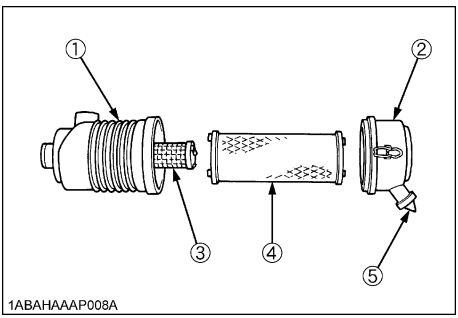

(1) Air cleaner body
(2) Cover
(3) Secondary element
(4) Primary element
(5) Evacuator valve

IMPORTANT :

- Make sure hooking clip for cover for the element is tight enough. If it is loose, dust and dirt may be sucked in, wearing down the cylinder liner and piston ring earlier, and thereby resulting in poor power output.
- Do not overservice the air cleaner element. Overservicing may cause dirt to enter the engine causing premature wear. Use the dust indicator as a guide on when to service.

■Cleaning Primary Air Filter Element

To clean the element, use clean dry compressed air on the inside of the element.Air pressure at the nozzle must not exceed 205 kPa (2.1 kgf/cm; 30 psi).
Maintain reasonable distance between the nozzle and the filter.

■Evacuator valve

Open the evacuator valve once a week under ordinary conditions - or daily when used in a dusty place - to get rid of large particles of dust and dirt.

■For the air cleaner with a dust cup (optional)

Remove and clean out the dust cup before it becomes half full with dust; usually once a week, or even every day if the working surroundings are dusty.
Install the air cleaner dust cup with "TOP" indicated on the rear of the cup in the upside. (However, it may be installed in either direction when the cover is placed at the lower part.)

IMPORTANT :

- If the dust cup is mounted incorrectly, dust or dirt does not collect in the cup, and direct attachments of the dust to the element will cause its lifetime to shorten to a great extent.

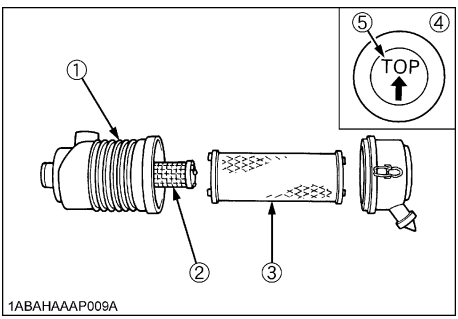

(1) Air cleaner body
(2) Secondary element
(3) Primary element
(4) Dust cup
(5) "TOP" mark

■Dust indicator (optional)

If the red signal on the dust indicator attached to the air cleaner is visible, the air cleaner has reached the service level.
Clean the element immediately, and reset the signal with the "RESET" button.

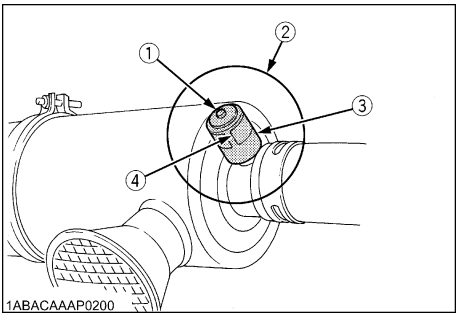

(1) "RESET" button
(2) Dust indicator
(3) Service level
(4) Signal

ELECTRIC WIRING

CAUTION

To avoid personal injury:

- **Shorting of electric cable or wiring may cause a fire.**
  - **Check to see if electric cables and wiring are swollen, hardened or cracked.**
  - **Keep dust and water away from all power connections.**
    Loose wiring terminal parts, make bad connections. Be sure to repair them before starting the engine.

Damaged wiring reduces the capacity of electrical parts. Change or repair damaged wiring immediately.

FAN BELT

■Adjusting Fan Belt Tension

CAUTION

To avoid personal injury:

- **Be sure to stop the engine and remove the key before checking the belt tension.**
- **Be sure to reinstall the detached safety shield after maintenance or checking.**

Proper fan belt tension	A deflection of between 10 to 12 mm (0.39 to 0.47 in.) when the belt is pressed in the middle of the span.

1. Stop the engine and remove the key.
2. Apply moderate thumb pressure to belt between pulleys.
3. If tension is incorrect, loosen the alternator mounting bolts and, using a lever placed between the alternator and the engine block, pull the alternator out until the deflection of the belt falls within acceptable limits.
4. Replace fan belt if it is damaged.

IMPORTANT :

- If belt is loosen or damaged and the fan is damaged, it could result in overheats or insufficient charging. Correct or replace belt.

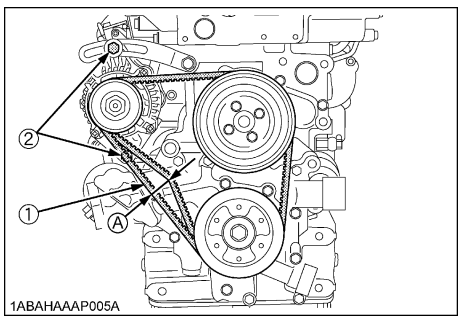

(1) Fan belt
(2) Bolt and nut
(A) 10 to 12 mm (0.39 to 0.47 in.) (under load of 10kgf (22 lbs))

CARRIAGE AND STORAGE

CARRIAGE

CAUTION

To avoid personal injury:

- **Fix the engine securely not to fall during operation.**
- **Do not stand near or under the engine while carrying it.**
- **The engine is heavy. In handling it, be very alert not to get your hands and body caught in.**

1. Use carrier such as crane when carrying the engine, or hurt your waist and yourself. Support the engine securely with rope not to fall while carrying it.
2. When lifting the engine, put the hook securely to metal fittings attached to the engine. Use strong hook and fittings enough to hang the engine.

STORAGE

CAUTION

To avoid personal injury:

- **Do not clean the machine with engine running.**
- **To avoid the danger of exhaust fume poisoning, do not operate the engine in a closed building without proper ventilation.**
- **When storing the engine just after running, let the engine cool off.**

Before storing the engine for more than a few months, remove any dirt on the machine, and:

1. Drain the coolant in the radiator. Open the cock at the bottom of the radiator, and remove the pressure cap to drain water completely. Leave the cock open. Hang a note written "No water" on the pressure cap. Since water may freeze when the temperature drops below 0°C (32°F), it is very important that no water is left in the machine.
2. Remove dirty engine oil, fill with new oil and run the engine for about 5 minutes to let the oil penetrate to all the parts.
3. Check all the bolts and nuts, and tighten if necessary.
4. Remove the battery from the engine, adjust the electrolyte level, and recharge it. Store the battery in a dry and dark place.
5. When the engine is not used for a long period of time, run it for about 5 minutes under no load every 2-3 months to keep it free from rust. If the engine is stored without any running, moisture in the air may condense into dew over the sliding parts of the engine, resulting in rust there.
6. If you forget to run the engine for longer than 5-6 months, apply enough engine oil to the valve guide and valve stem seal and make sure the valve works smoothly before starting the engine.
7. Store the engine in a flat place and remove the key from engine.
8. Do not store the engine in a place where has flammable materials such as dry grass or straw.
9. When covering the engine for storage, let engine and muffler cool off completely.
10. Operate the engine after checking and repairing damaged wirings or pipes, and clearing flammable materials carried by mouse.

TROUBLESHOOTING

If the engine does not function properly, use the following chart to identify and correct the cause.

■When it is difficult to start the engine

Cause	Countermeasures
Fuel is thick and doesn't flow.	* Check the fuel tank and fuel filter. * Remove water, dirt and other impurities. * As all fuel will be filtered by the filter, if there should be water or other foreign matters on the filter, clean the filter with kerosene.
Air or water mixed in fuel system	* If air is in the fuel filter or injection lines, the fuel pump will not work properly. * To attain proper fuel injection pressure, check carefully for loosened fuel line coupling, loose cap nut, etc. * Loosen joint bolt stop fuel filter and air vent screws of fuel injection pump to eliminate all the air in the fuel system.
Engine oil becomes thick in cold weather and engine cranks slow.	* Change grade of oil according to the weather (temperature.)
Battery is discharged and the engine will not crank.	* Charge battery. * In winter, always remove battery from machine, charge fully and keep indoors. Install in machine at time of use.

■When output is insufficient

Cause	Countermeasures
Fuel is insufficient.	* Check fuel system.
Overheating of moving parts	* Check lubricating oil system. * Check to see if lubricating oil filter is working properly. * Filter element deposited with impurities would cause poor lubrication. Change element.
Air cleaner is dirty	* Clean the element every 100 hours of operation.
Injection pump wear	* Do not use poor quality fuel as it will cause wear of the pump. Only use No. 2-D diesel fuel.(See **"FUEL"** in **"PERIODIC SERVICE"** Section)

NOTE :

- If the cause of trouble can not be found, contact your KUBOTA dealer.

■When engine suddenly stops

Cause	Countermeasures
Lack of fuel	* Check the fuel tank and refill the fuel, if necessary. * Also check the fuel system for air or leaks.
Bad nozzle	* If necessary, replace with a new nozzle.
Moving parts are overheated due to shortage of lubrication oil or improper lubrication.	* Check amount of engine oil with oil level gauge. * Check lubricating oil system. * At every 2 times of oil change, oil filter cartridge should be replaced.

■When color of exhaust is especially bad

Cause	Countermeasures
Fuel is of extremely poor quality.	* Select good quality fuel. Use No. 2-D diesel fuel only.
Nozzle is bad.	* If necessary, replace with new nozzle.

■When engine must be stopped immediately

Cause	Countermeasures
Color of exhaust suddenly turns dark.	* Check the fuel injection system, especially the fuel injection nozzle.
Bearing parts are overheated.	* Check the lubricating system.
Oil lamp lights up during operation.	* Check the lubricating system. * Check the function of the relieve valve in the lubricating system. * Check pressure switch. * Check filter base gasket.

■When engine overheats

Cause	Countermeasures
Engine oil insufficient	* Check oil level. Replenish oil as required.
Fan belt broken or elongated	* Change belt or adjust belt tension.
Coolant insufficient	* Replenish coolant.
Excessive concentration of antifreeze	* Add water only or change to coolant with the specified mixing ratio.
Radiator net or radiator fin clogged with dust	* Clean net or fin carefully.
Inside of radiator or coolant flow route corroded	* Clean or replace radiator and parts.
Fan or radiator or radiator cap defective	* Replace defective parts.
Thermostat defective	* Check thermostat and replace if necessary.
Temperature gauge or sensor defective	* Check temperature with thermometer and replace if necessary.
Overload running	* Reduce load.
Head gasket defective or water leakage	* Replace parts.
Unsuitable fuel used	* Use the specified fuel.

SPECIFICATIONS

Model	V2607-DI-T-E3-B	V3307-DI-T-E3-B
Type	Vertical, water-cooled, 4-cycle diesel engine	
Number of cylinders	4	
Bore and stroke mm (in.)	87 x 110 (3.43 x 4.33)	94 x 120 (3.70 x 4.72)
Total displacement cm^3 (cu.in.)	2,615 (160.04)	3,331 (203.27)
Combustion type	Direct Injection Type (E-CDIS)	
SAE NET Intermittent H.P. (SAEJ1349) kW / rpm (HP / rpm)	49.2 / 2700 (66.0 / 2700)	53.7 / 2600 (73.0 / 2600)
SAE NET Continuous H.P. (SAEJ1349) kW / rpm (HP / rpm)	42.7 / 2700 (57.2 / 2700)	45.6 / 2600 (62.1 / 2600)
Maximum bare speed rpm	2900	2800
Maximum bare idling speed rpm	825 to 875	775 to 825
Order of firing	1-3-4-2	
Direction of rotation	Counter-clockwise (viewed from flywheel side)	
Injection pump	Bosch Type mini pump	
Injection pressure	1st opening pressure 18.63 Mpa (190 kgf/cm^2) 2nd opening pressure 21.57 Mpa (220 kgf/cm^2)	1st opening pressure 18.63 Mpa (190 kgf/cm^2) 2nd opening pressure 22.56 Mpa (230 kgf/cm^2)
Injection timing (T.D.C.)	-0.022 rad (-1.25°)	0.023 rad (1.3°)
Compression ratio	19.0	20.0
Fuel	Diesel Fuel No.2-D	
Lubricant (API classification)	above CF grade	
Dimension mm (in.) (length x width x height)	650 x 475 x 680 (25.6 x 18.7 x 26.8)	674 x 506 x 739 (26.5 x 19.9 x 29.1)
Dry weight (BB Spec.) kg (lbs.)	235 (518)	268 (591)
Starting system	Cell starter (with glow plug)	
Starting motor	12 V 2.5 kW	12 V 3.0 kW
Charging generator	12 V 720 W	12 V 720 W
Recommended battery capacity	12 V 92 Ah	12 V 108 Ah

NOTE :

- Specifications are subject to change without notice.

ENGLISH

WIRING DIAGRAMS

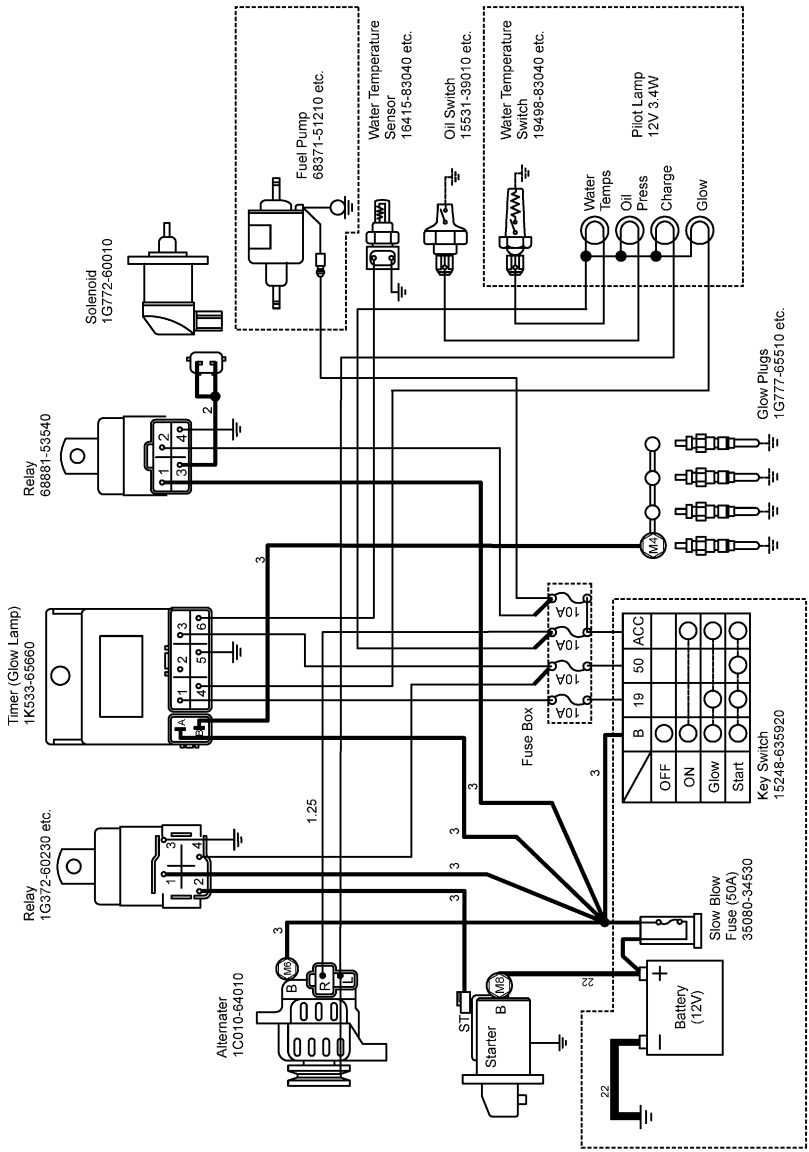

1ABAHAAAP007G