https://truckmanualshub.com/

DAEWOO
DAEWOO HEAVY INDUSTRIES & MACHINERY LTD.

65.99897-8056
Feb. 2001

MAINTENANCE MANUAL

Diesel Engine

D1146

D1146TI

DE08TIS

PS-MMA0415-E1A

https://truckmanualshub.com/

FOREWORD

This maintenance manual is designed to serve as a reference for DAEWOO Heavy Industries Ltd's (here after DAEWOO's) customers and distributors who wish to gain basic product knowledge on DAEWOO's **D1146, D1146TI** and **DE08TIS** Diesel engine.

This economical and high-performance diesel engine (6 cylinders, 4 strokes, in-line, direct injection type) has been so designed and manufactured to be used for the overland transport or industrial purpose. That meets all the requirements such as low noise, fuel economy, high engine speed, and durability.

To maintain the engine in optimum condition and retain maximum performance for a long time, CORRECT OPERATION and PROPER MAINTENANCE are essential.

In this manual, the following symbols are used to indicate the type of service operations to be performed.

Removal

Installation

Disassembly

Reassembly

Align the marks

Directional Indication

Inspection

Measurement

Adjustment

Cleaning

Pay close attention-Important

Tighten to specified torque

Use special tools of manufacturer's

Lubricate with oil

Lubricate with grease

During engine maintenance, please observe following instructions to prevent environmental damage;

- Take old oil to an old oil disposal point only.
- Ensure without fail that oil and diesel fuel will not get into the sea or rivers and canals or the ground.
- Treat undiluted anti-corrosion agents, antifreeze agents, filter element and cartridges as special waste.

https://truckmanualshub.com/

- The regulations of the relevant local authorities are to be observed for the disposal of spent coolants and special waste.

If you have any question or recommendation in connection with this manual, please do not hesitate to contact our head office, dealers or authorized service shops near by your location for any services.

For the last, the content of this maintenance instruction may be changed without notice for some quality improvement. Thank you.

DAEWOO Heavy Industries & Machinery LTD.
Feb. 2001

https://truckmanualshub.com/

CONTENTS

1. GENERAL INFORMATION

1.1 General Repair Instructions 1
1.2. Engine Specific Character 2
1.3. Engine Specifications 4
1.4. Engine Assembly 8

2. MAJOR MAINTENANCE

2.1. Preventive Maintenance 13
2.2. Diagnosis and Remedy 22
2.3. Engine Inspection 32

3. MAINTENANCE

3.1. Engine Disassembly 33
3.2. Inspection and Measurement on Major Parts 48
3.3. Reassembly 69
3.4. Breaking in 96

4. MAINTENANCE OF MAJOR COMPONENTS

4.1. Cooling System 98
4.2. Lubrication System 102
4.3. Fuel Injection Pump 106
4.4. Turbocharger 122

5. Special Tool List 132

● **Appendix** 134

● **WORLDWIDE NETWORK**

Printed in Jan. 2001 PS-MMA0415-E1A

https://truckmanualshub.com/

1. GENERAL INFORMATION

1.1. General Repair Instructions

1. Before performing service operation, disconnect the grounding cable from the battery for reducing the chance of cable damage and burning due to short-circuiting.
2. Use covers for preventing the components from damage or pollution.
3. Engine oil and anti-freeze solution must be handled with reasonable care as they cause paint damage.
4. The use of proper tools and special tools where specified is important to efficient and reliable service operation.
5. Use genuine DAEWOO parts necessarily.
6. Used cotter pins, gaskets, O-rings, oil seals, lock washer and self-lock nuts should be discarded and new ones should be prepared for installation as normal function of the parts can not be maintained if these parts are reused.
7. To facilitate proper and smooth reassemble operation, keep disassembled parts neatly in groups. Keeping fixing bolts and nut separate is very important as they vary in hardness and design depending on position of installation.
8. Clean the parts before inspection or reassembly. Also clean oil ports, etc. using compressed air to make certain they are free from restrictions.
9. Lubricate rotating and sliding faces of parts with oil or grease before installation.
10. When necessary, use a sealer on gaskets to prevent leakage.
11. Carefully observe all specifications for bolts and nuts torques.
12. When service operation is completed, make a final check to be sure service has been done property.

https://truckmanualshub.com/

1.2. Engine Specific Character

1.2.1. Toroidal combustion mode (D1146)

The **D1146** engine is operated in the toroidal combustion mode that was developed by this company with AVL Co. Australia.

The feature of this mode in the fundamental structure is that there are combustion chambers in the centers of piston heads and swirling passages in the cylinder heads.

This swirling passages when intake stroke generates the strong swirling motion in the combustion chambers by giving the intake air a big moment, and when compression stroke, the special piston's shapes causing very complicated and distorted flows by means of eddy current and squashed flows will make the air and fuel mix more smoothly.

Also, when explosion stroke, a considerable output increase came to be expected with the accomplishment of nearly perfect combustion by the more smooth mixing of air and fuel which was injected through multi-nozzles in the combustion chamber.

This engine by means of Toroidal Combustion Mode has the specific character such as quiet and stable revolutional motion, multi-purpose application, economical fuel and oil consumption, etc.

1.2.2. OMEGA combustion bowl (D1146TI, DE08TIS)

The OMEGA combustion bowl is a unit designed to perform high efficiency, low emission combustion. As the rim around the combustion bowl port of the upper of the piston has been machined in a smaller size than the interior of the combustion bowl, strong swirl is produced in the combustion bowl and strong squish flow makes the fuel be mixed more sufficiently with air.

Due to the application of OMEGA combustion system and optimal utilization of intake and exhaust port configuration within the cylinder head, the **D1146TI, DE08TIS** diesel engines discharge very low level of hazardous exhaust gases such as smoke, nitrogen oxide, hydrocarbon, or carbon monoxide and thus ensure high performance and low fuel consumption.

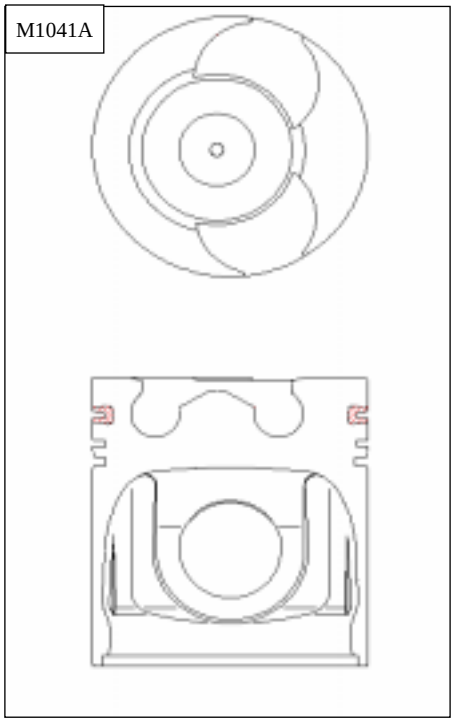

Printed in Jan. 2001 PS-MMA0415-E1A

https://truckmanualshub.com/

1.2.3. Oil gallery cooling type piston (DE08TIS)

Oil gallery cooling is used for the piston of **DE08TIS** diesel engine.

When thermal loading is high, piston cooling by means of an oil gallery in the crown is normally necessary to prevent crown cracking and ring sticking. The design of the gallery, the design and location of the oil spray nozzle and the quantity of oil flowing in the gallery are critical in order to achieve the desired temperature reduction.

The cross section shape of the gallery should be designed to achieve sufficient oil movement to maximize cooling efficiency.

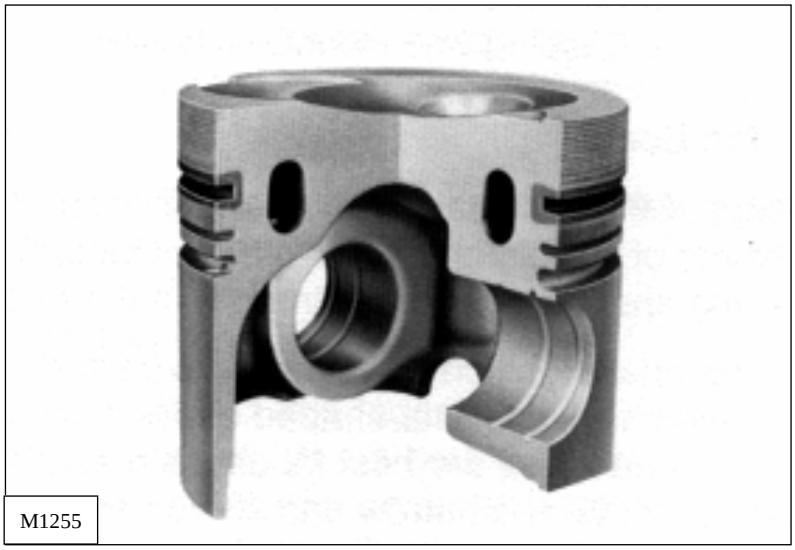

M1255

Printed in Jan. 2001 PS-MMA0415-E1A

https://truckmanualshub.com/

1.3. Engine Specifications

1.3.1. Specification

Items \ Engine Model		D1146	D1146TI	DE08TIS
Engine type		4 cycle in-line, Water-cooled type Naturally aspirated	4 cycle in-line, Water-cooled type Turbo charged & intercooled	
Combustion chamber type		Direct injection type		
Cylinder liner type		Replaceable dry liner		
Timing gear system		Gear driven type		
No. of piston ring		Compression ring 2, oil ring 1		
No. of cylinder-bore x stroke	(mm)	6 – 111 × 139		
Total piston displacement	(cc)	8,071		
Compression ratio		17.5 : 1	16.8 : 1	18.5 : 1
Engine dimension (length x width x height)	(mm)	1,253x811.5x934.5	1,253x812.5x1,009	1,253x812.5x1,009
Engine weight	(kg)	730	745	745
Rotating direction (viewed from flywheel)		Counter clockwise		
Fuel injection order		1 – 5 – 3 – 6 – 2 – 4		
Fuel injection timing (B.T.D.C static)		15°	9°	3°
Injection pump type		Zexel in-line “AD” type		Zexel in-line “P” type
Governor type		Mechanical governor type(RLD)		Mechanical governor type(RLD-J)
Injection nozzle type		Multi-hole type (5 hole)		Multi-hole type (7 hole)
Fuel injection pressure	(kg/cm^2)	210	214	160/220
Compression pressure	(kg/cm^2)	28 (at 200 rpm)		
Intake and exhaust valve clearance (at cold)	(mm)	0.3		
Intake valve	Open at	16° (B.T.D.C)		
	Close at	36° (A.B.D.C)		
Exhaust valve	Open at	46° (B.B.D.C)		
	Close at	14° (A.T.D.C)		
Lubrication method		Full forced pressure feed type		
Oil pump type		Gear type driven by crankshaft		
Oil filter type		Paper element type	Cartridge type	
Lubricating oil capacity (max./min.)	(lit)	15.5/12 or 20/17		
Oil cooler type		Water cooled		
Water pump		Centrifugal type driven by belt		
Cooling Method		Fresh water forced circulation		
Cooling water capacity (engine only)	(lit)	14		
Thermostat type		Wax pallet type (79 ~ 94 °C or 83 ~ 95 °C)		
Air compressor type & capacity	(cc)	Belt driven type, 220 or 300		
Alternator voltage – capacity	(V – A)	24 – 45 or 24-150		
Starting Motor voltage – output	(V - kW)	24 – 4.5		
Air heater capacity	(V – A)	22 – 95 (2.1kW)		
Battery capacity	(V - AH)	24 - 150		

https://truckmanualshub.com/

1.3.2. Engine power

Production tolerance : ±5%

Engine model		Performance					
Model	Suffix	Injection timing (BTDC°)	Power (PS/rpm)	Torque (kg.m/rpm)	Low idle (rpm)	High idle (rpm)	Remark
D1146	EACBA EACBB EACBE EACBH EACBI EACBK	15	182/2,500	57.5/1,600	600-650	2750	
D1146TI	EAPBA	9	205/2,200	75/1,400	600-650	2370 - 2,470	EURO-I
	EAPCA	9	215/2,300	82/1,400	600-650	2250 - 2,350	
DE08TIS	ECPBA ECPCA	3	225/2,300	82/1,200	600-650	2,530	EURO-II
	ECPBB ECPCB	3	240/2,300	90/1,200	600-650	2,530	

* Note : All data are based on operation without cooling fan at ISO 1585(SAE J1349).

https://truckmanualshub.com/

1.3.3. Performance curve (DE08TIS – 225PS)

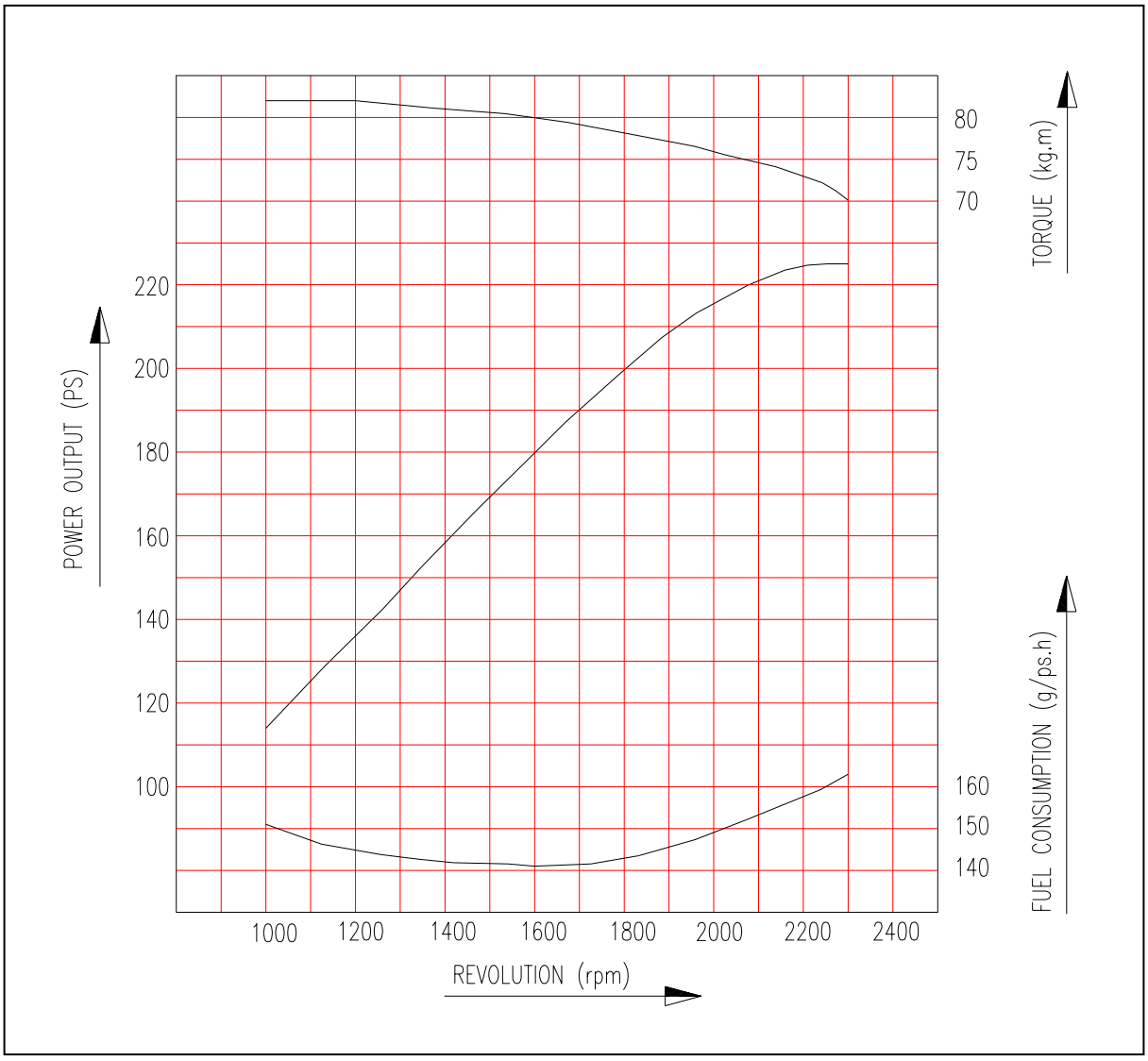

Performance	ISO 1585(SAE J1349)
Output (max.)	165 kW (225PS) / 2,300 rpm
Torque (min)	804 N.m (82 kg.m) / 1,200 rpm
Fuel consumption (min)	192 g/kW.h (141 g / PS.h)

https://truckmanualshub.com/

1.3.4. Performance curve (DE08TIS – 240PS)

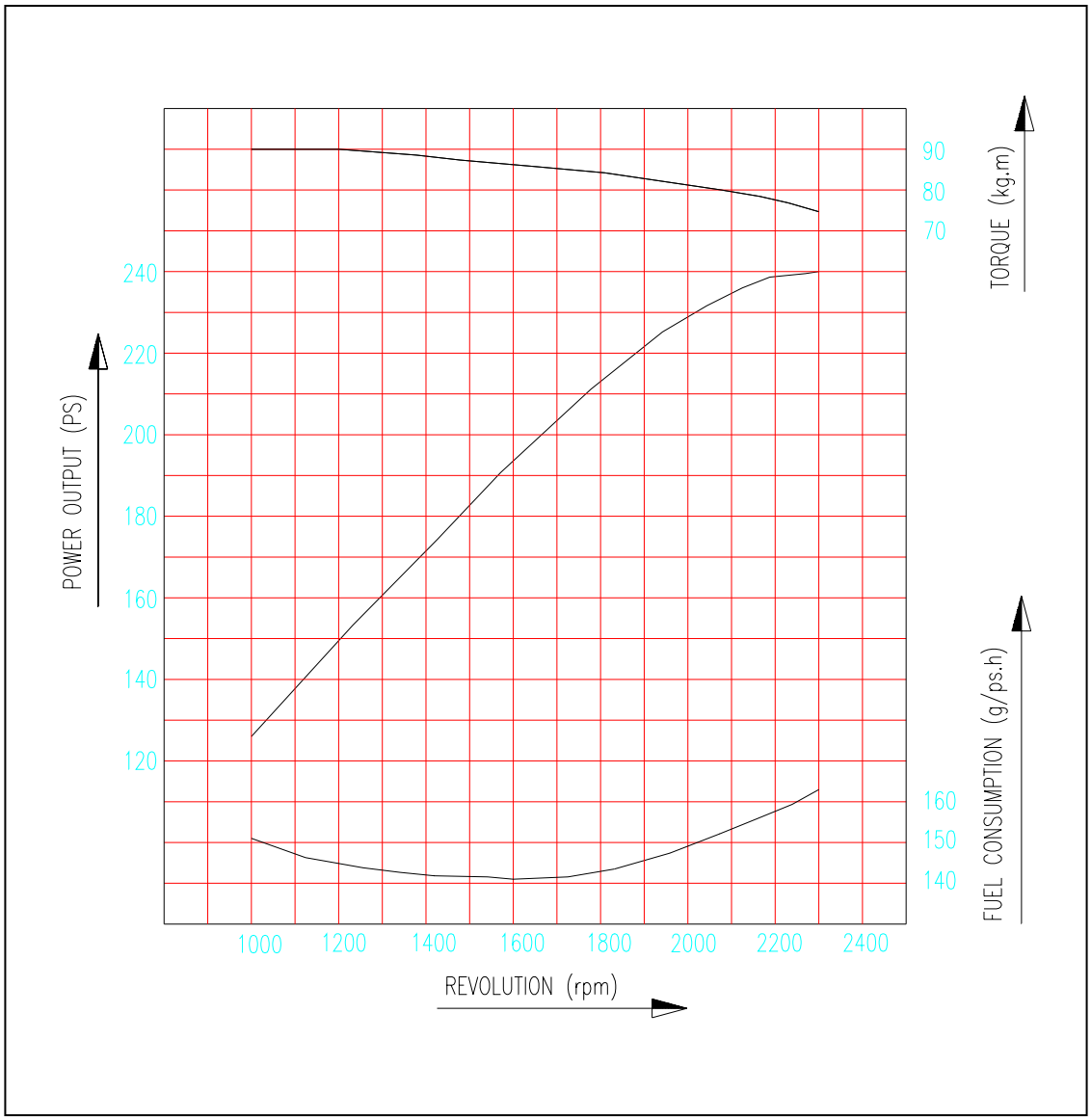

Performance		ISO 1585(SAE J1349)
Output	(max.)	176 kW (240PS) / 2,300 rpm
Torque	(max.)	882 N.m (90 kg.m) / 1,200 rpm
Fuel consumption	(min.)	192 g/kW.h (141 g / PS.h)

https://truckmanualshub.com/

1.4. Engine Assembly

1.4.1. Engine sectional view (longitudinal)

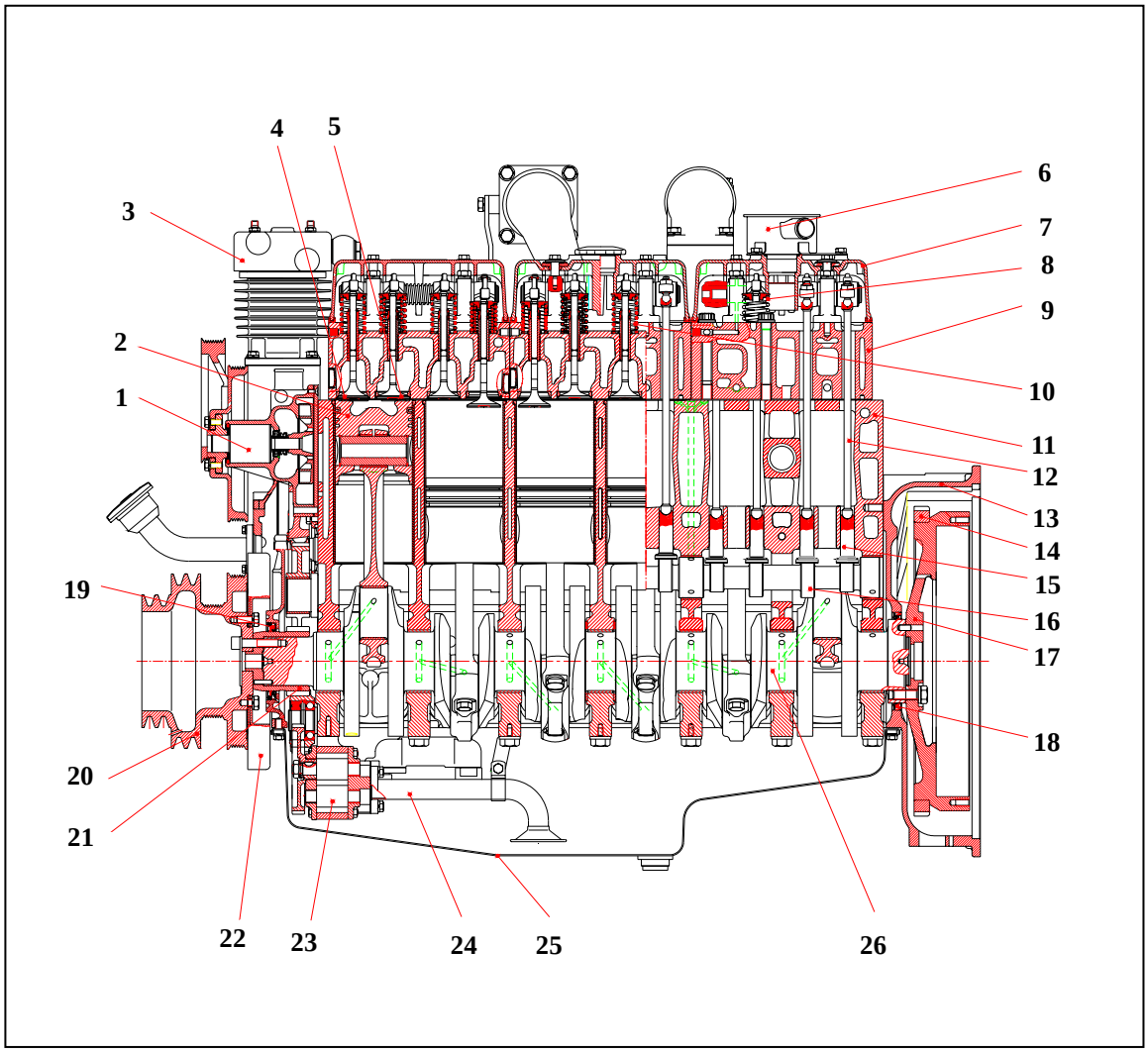

1	Water pump	2	Piston	3	Air compressor
4	Intake valve	5	Exhaust valve	6	Breather
7	Cylinder head cover	8	Exhaust valve spring	9	Cylinder head
10	Intake valve spring	11	Cylinder block	12	Push rod
13	Flywheel housing	14	Ring gear	15	Tappet
16	Cam shaft	17	Fly wheel	18	Oil seal (Rear)
19	Oil seal (Front)	20	Crank shaft pulley	21	Crank gear
22	Vibration damper	23	Oil pump	24	Oil suction pipe
25	Oil pan	26	Crank shaft		

https://truckmanualshub.com/

1.4.2. Engine sectional view (cross)

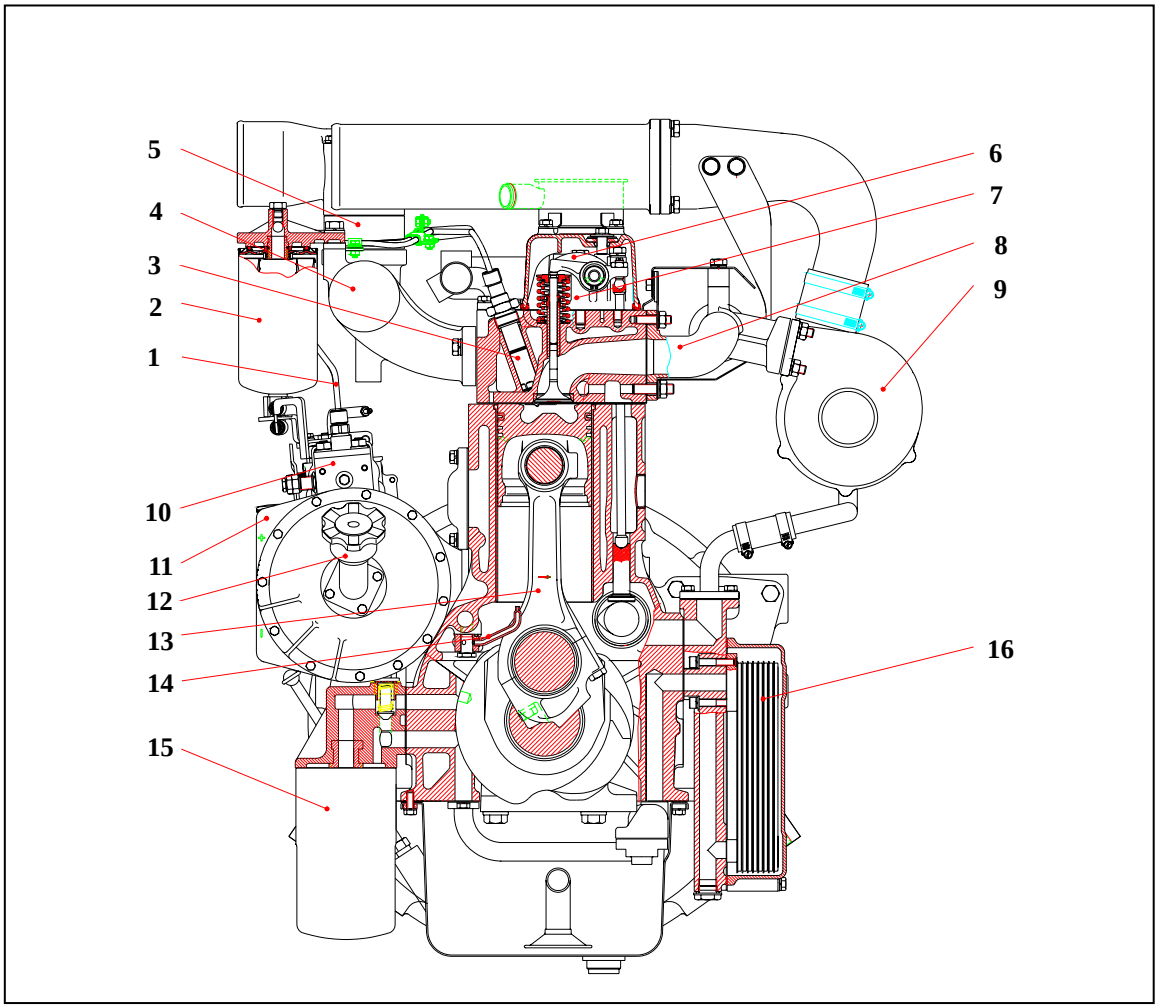

1	Fuel injection pipe	9	Turbo charger
2	Fuel filter	10	Fuel injection pump
3	Fuel injection nozzle	11	Timing gear case
4	Intake manifold	12	Oil filler cap
5	Air heater	13	Connecting rod
6	Rocker arm	14	Oil spray nozzle
7	Rocker arm bracket	15	Oil filter
8	Exhaust manifold	16	Oil cooler

https://truckmanualshub.com/

1.4.3. Engine Assembly Views

(1) D1146 (bus)

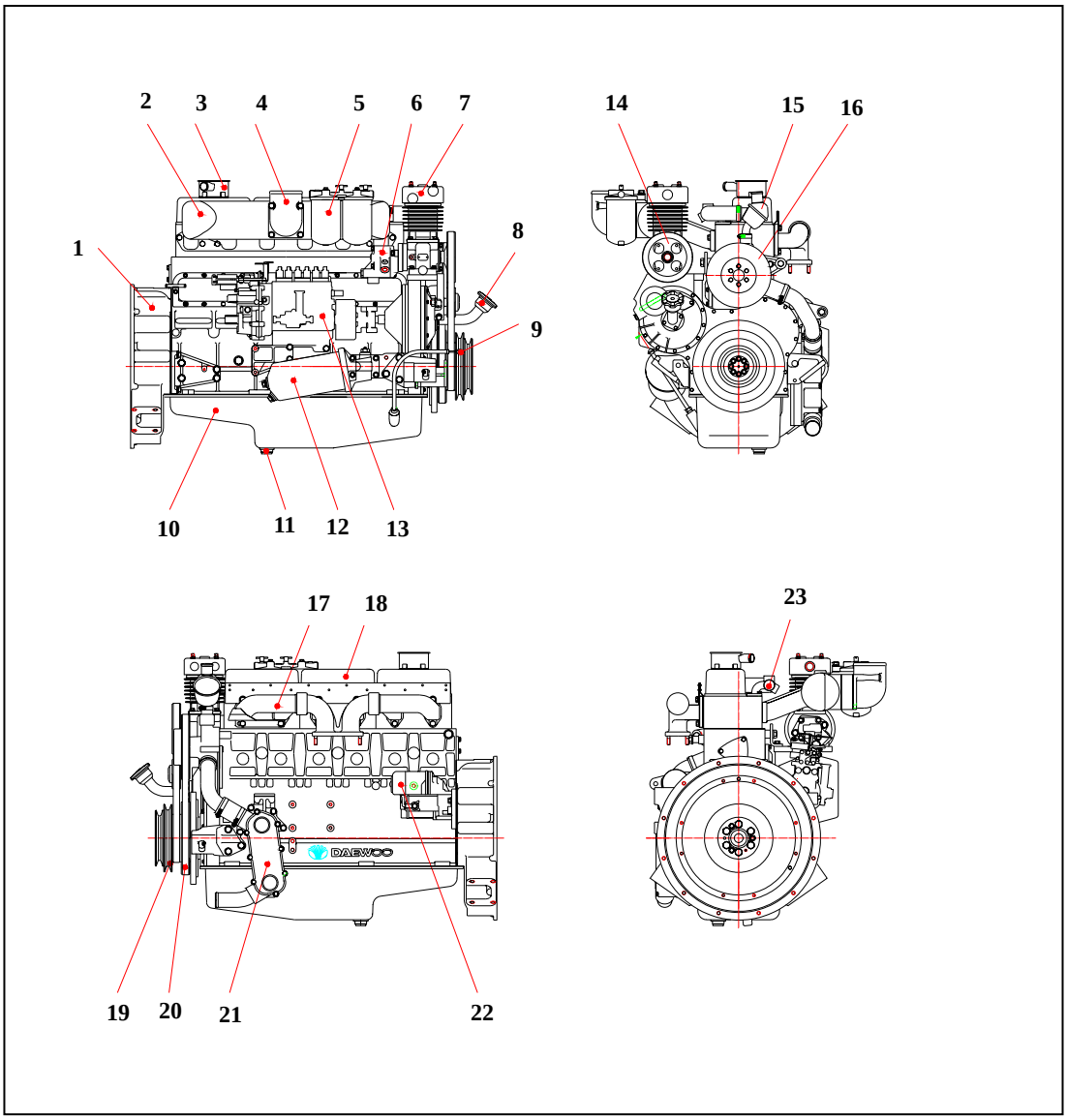

1	Flywheel housing	8	Oil filler cap	16	Water pump
2	Intake manifold	9	Oil level gauge	17	Exhaust manifold
3	Breather	10	Oil pan	18	Cylinder head cover
4	Air pipe	11	Oil drain plug	19	Crank shaft pulley
	(Air cleaner to intake manifold)	12	Oil filter	20	Vibration damper
5	Fuel filter	13	Fuel injection pump	21	Oil cooler
6	Power steering pump	14	Air compressor pulley	22	Starter
7	Air compressor	15	Thermostat	23	Cooling water pipe

https://truckmanualshub.com/

(2) DE08TIS (Truck)

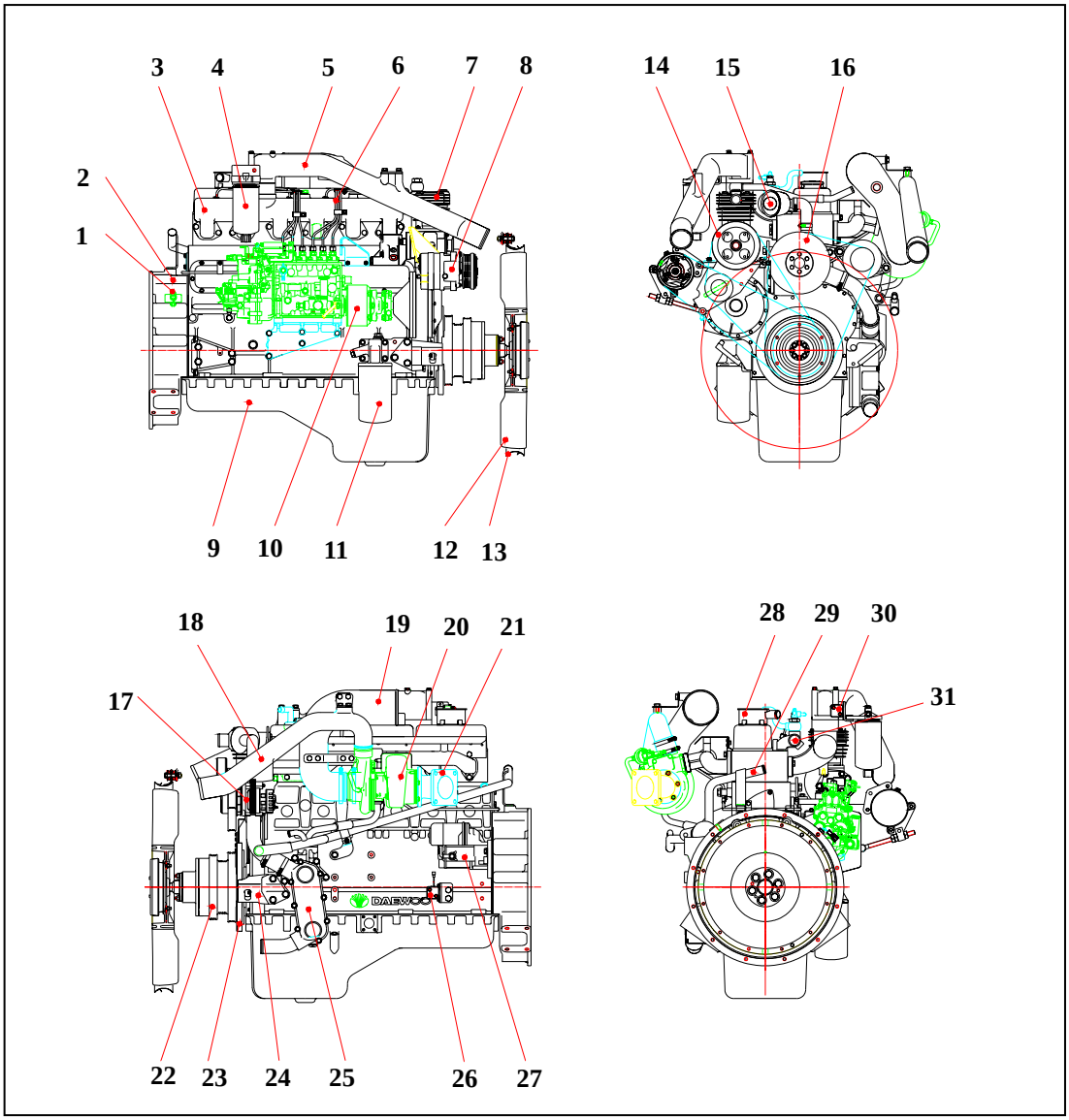

1	Magnetic pick-up sensor	12	Cooling fan	21	Exhaust elbow
2	Flywheel housing	13	Cooling fan guide	22	Crank shaft pulley
3	Intake manifold	14	Air compressor pulley	23	Vibration damper
4	Fuel filter	15	Thermostat	24	Mounting bracket
5	Air pipe	16	Water pump	25	Oil cooler
	(Intercooler to intake manifold)	17	Alternator	26	Starter relay
6	Fuel injection pipe	18	Air pipe	27	Starter
7	Air compressor		(Turbocharger to intercooler)	28	Breather
8	Air con. compressor	19	Air pipe	29	Water delivery pipe
9	Oil pan		(Air cleaner to turbocharger)	30	Air heater relay
10	Fuel injection pump	20	Turbocharger	31	Cooling water pipe
11	Oil filter				

https://truckmanualshub.com/

(3) DE08TIS (Bus)

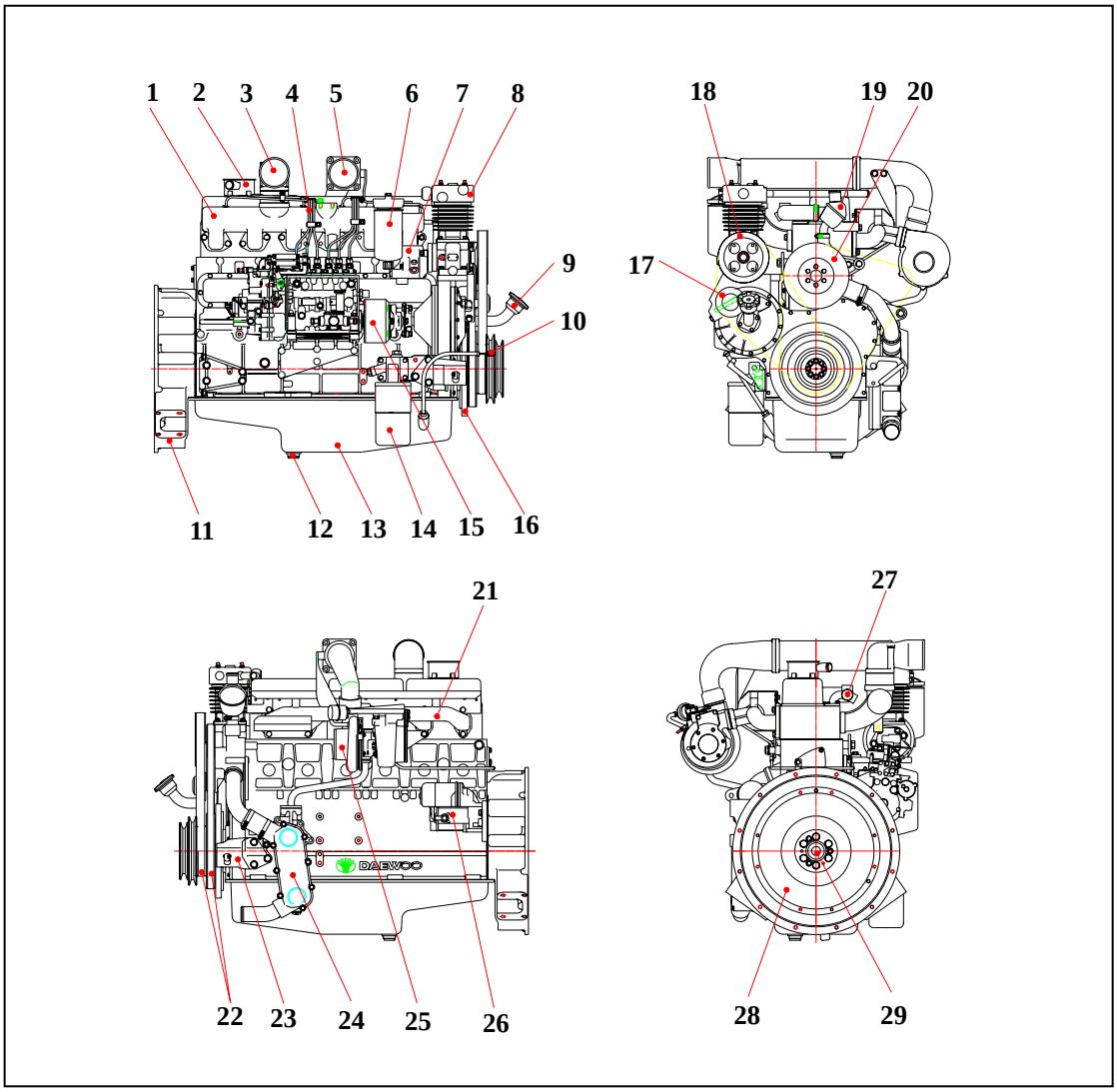

1	Intake manifold	10	Oil level gauge	20	Water pump
2	breather	11	Flywheel housing	21	Exhaust manifold
3	Air pipe (Intercooler to intake manifold)	12	Drain plug	22	Belt
		13	Oil pan	23	Mounting bracket
4	Fuel injection pipe	14	Oil filter	24	Oil cooler
5	Air pipe (Turbocharger to intercooler)	15	Fuel injection pump	25	Turbocharger
		16	Vibration damper	26	Starter
6	Fuel filter	17	Idle gear pulley	27	Cooling water pipe
7	Power steering pump	18	Air compressor pulley	28	Fly wheel
8	Air compressor	19	Thermostat	29	Pilot bearing
9	Oil filler cap				

https://truckmanualshub.com/

2. Major Maintenance

2.1. Preventive Maintenance

The preventive maintenance means that the operator performs the servicing of engine to obtain long life and best performance from DAEWOO diesel engine.

2.1.1. Cooling Water

- Regarding the cooling water that is to be used for engine, the soft water not the hard water must be used.
- The engine cooling water can be used diluting it with antifreezing solution 40% and the additive for rust prevention (DCA4) 3 5 %.
- The density of above solution and additive must be inspected every 500 hours to maintain it properly.

NOTE :
The proper density control of antifreezing solution and rust preventing additive will be able to prevent the rusting effectively and maintain the stable quality of engine. For the improper control might give the fatal damage to the cooling water pump and cylinder liners, detail care is needed.

- Since **D1146, D1146TI** and **DE08TIS** (diesel engine of D1146 series) cylinder liner is dry type, particularly the cooling water control should be applied thoroughly.
- The density of antifreezing solution and additive for rust prevention is able to be confirmed by the cooling water test kit. (Fleetguard CC2602M or DAEWOO 60.99901-0038)
- How to use the cooling water test kit
  (1) When the cooling water temp. of engine is in the range of 10 55 °C, loosen the plug for cooling water discharge and fill the plastic cup about a half.

NOTE :
In taking the cooling water sample, if the water in auxiliary tank were taken, it is hard to measure the accurate density. Take the cooling water sample necessarily loosening the cooling water discharge plug.

  (2) At the state of a test paper soaked in the sampled water, after taking the paper out through water agitation, shake off the water.

https://truckmanualshub.com/

(3) Wait for about 45 sec. till the color change of test paper.

NOTE :
However, it should not elapse longer than 75 sec, and if it did, the hue would change.

(4) Make the numerical value by comparing the test paper which hue has changed with the color list of label on storage bottle.
(5) By comparing the hue changed into yellowish green or so with the green color indication of test paper storage bottle, confirm the density. (Then, the density indication must be in the hue range of 33% to 50%).
(6) The brown at the middle of test paper and the lower pink color indication represent the additive state for rust prevention, and the proper range is that the meeting numerical value of brown (vertical) and pink color (horizontal) locates in the range of 0.3 to 0.8 at the color list of label on the test paper storage bottle.
(7) In case of less than 0.3, replenish the additive for rust prevention (DCA4), and in case of more than 0.8, pour out the cooling water about 50% and then readjust the density after refilling with clean fresh water.

● **Amount of Anti-freeze in winter**

Ambient Temperature (°C)	Cooling water (%)	Anti-freeze (%)
Over -10	85	15
-10	80	20
-15	73	27
-20	67	33
-25	60	40
-30	56	44
-40	50	50

2.1.2. Fan belt

● Use a fan belt of specified dimensions, and replace if damaged, frayed, or deteriorated.

● Check the fan belt for belt tension.
If belt tension is lower than the specified limit, adjust the tension by relocating the alternator. (specified deflection: 10 ~ 15 mm when pressed down with thumb)

https://truckmanualshub.com/

2.1.3. Engine oil

● Check oil level with the oil level gauge and replenish if necessary.

- Check the oil level with the engine cooled. If the engine is warm, allow time for 5 ~ 10 minutes for oil drain into the crankcase before checking oil level. The oil level must be between Max and Min. lines on the gauge.
- Engine oil should be changed at the specified intervals.
  Oil filter cartridge should be changed simultaneously.
  - First oil change : 1,000km(50 hr) operating

First oil change	After 1,000km (50hr) operation	
Short-distance operation vehicle (city bus, dump truck)	D1146/TI	every 10,000km
	DE08TIS	every 20,000km
Long-distance operation vehicles (express bus, cargo truck)	D1146/TI	every 15,000km
	DE08TIS	every 30,000km

- The following oils are also recommended

Engine model	Recommend oil		Remark
	SAE No.	API No.	
D1146 D1146TI	SAE 15W40	above CD or CE	
DE08TIS	SAE15W40 SAE10W40	ACEA-E2 or ACEA-E3 (API CH-4)	

* If long oil change intervals are to be used, ACEA-E3 oil must be used.

2.1.4. Oil filter

● Check for oil pressure and oil leaks, and repair or replace the oil filter if necessary.

- Change the oil filter cartridge simultaneously at every replacement of engine oil.

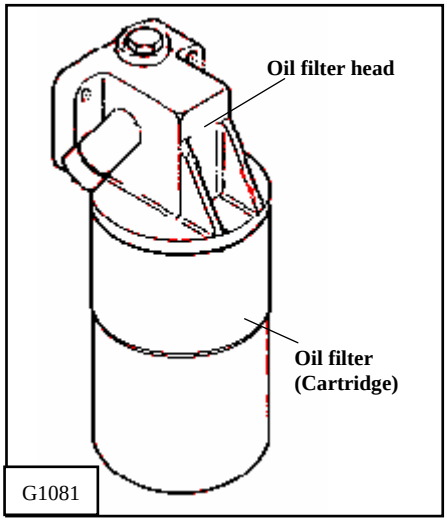

https://truckmanualshub.com/

2.1.5. Fuel filter

- Drain water in cartridge with loosening the cock under filter manually (6) from time to time.

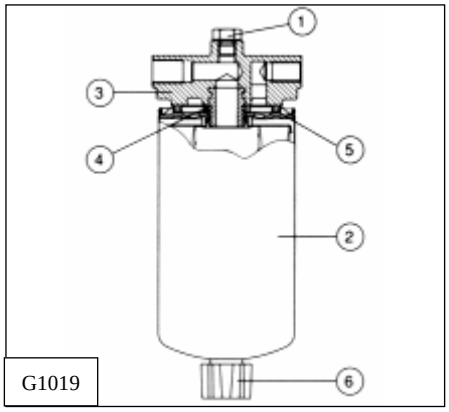

2.1.6. Air cleaner.

- In case that elements are deformed, damaged or if the air cleaner has a crack, replace it.
- By the definite interval, the elements must be cleaned and replaced.

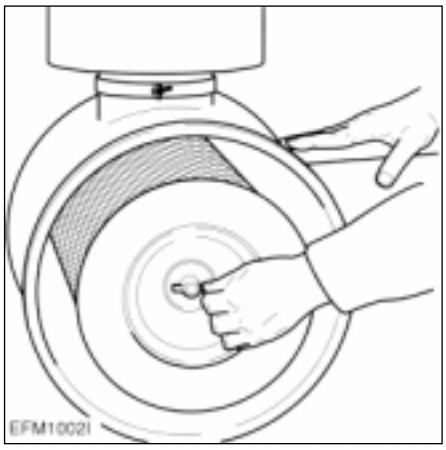

2.1.7. Intercooler

The intercooler is air to air type and has a large cooling fan capacity. The intercooler life and performance depends on the intake air condition greatly. Fouled air pollutes and clogs the air fins of intercooler. As a result of this, the engine output is decreased and engine malfunction is occurred. So you always check whether the intake air systems like air filter element are worn or polluted.

https://truckmanualshub.com/

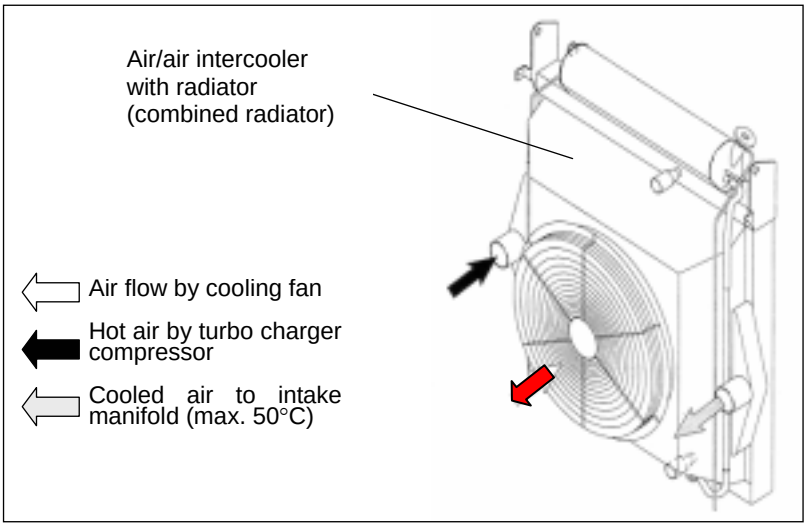

2.1.8. Valve clearance adjust procedure

- After letting the #1 cylinder's piston come at the compression top dead center by turning the crankshaft, adjust the valve clearances.
- Loosen the lock nuts of rocker arm adjusting screws and push the feeler gauge of specified value between a rocker arm and a valve stem and adjust the clearance with adjusting screw respectively and then tighten with the lock nut.
- As for the valve clearance, adjust it when in cold, as follows.

Model	Intake Valve	Exhaust Valve
D1146 D1146TI DE08TIS	0.3 mm	0.3 mm

1) Rotate the crankshaft to overlap the intake and the exhaust valves of #6, then #1 cylinder become the compression state of top dead center.
2) Therefore adjust the valve clearance corresponding to " ⇨ " of lower figure.
   At this time there are no force on the push rods of #1 cylinder.

Printed in Jan. 2001 PS-MMA0415-E1A

https://truckmanualshub.com/

3) Rotating the crankshaft by one revolution, #6 cylinder become the compression state of top dead center.
4) Thereafter adjust the valve clearances corresponding to " ➡ " of lower figure.
5) After reinsuring the valve clearances, retighten if necessary.

- No. 1 cylinder is located at the side where flywheel was installed.

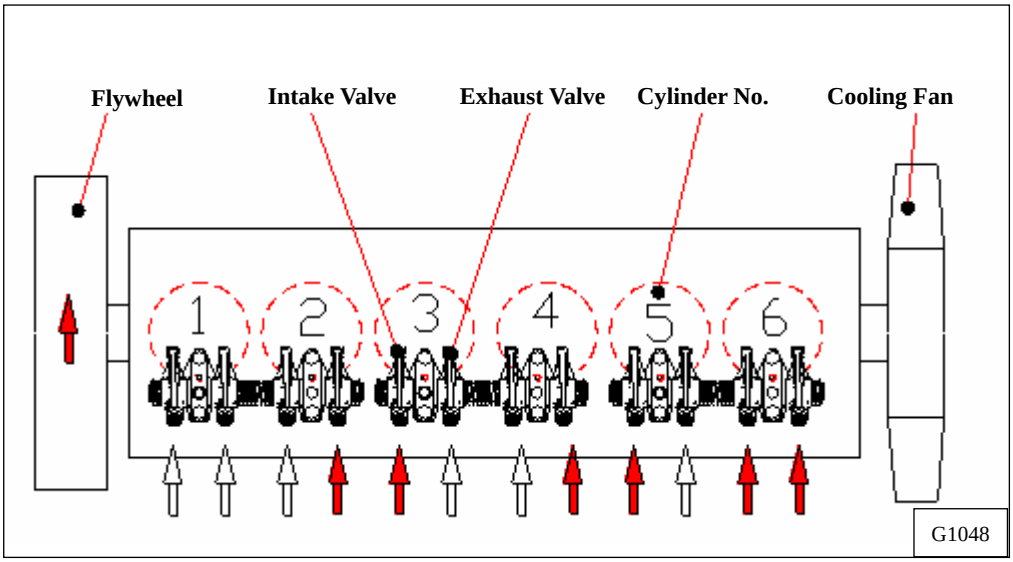

2.1.9. Cylinder compression pressure

- Stop the engine after warming up, and

take out nozzle holder assembly.

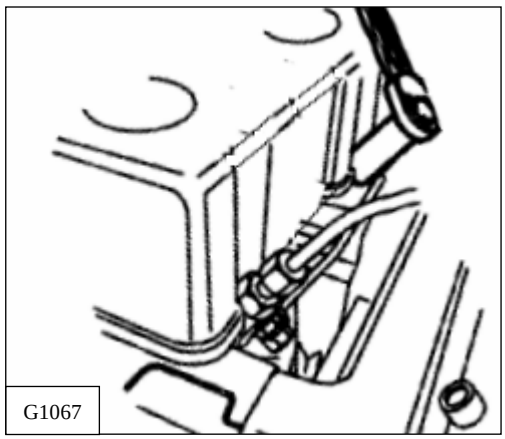

https://truckmanualshub.com/

- Install the special tool (compression gauge adapter) at the nozzle holder hole, and connect the compression pressure gauge there.

Standard value	28kg/cm^2 over
Limit value	24kg/cm^2
Difference between each cylinder	Within ± 10 %

♦ Condition : Water temperature 20°C, Engine rotation 200rpm (10 rotations)

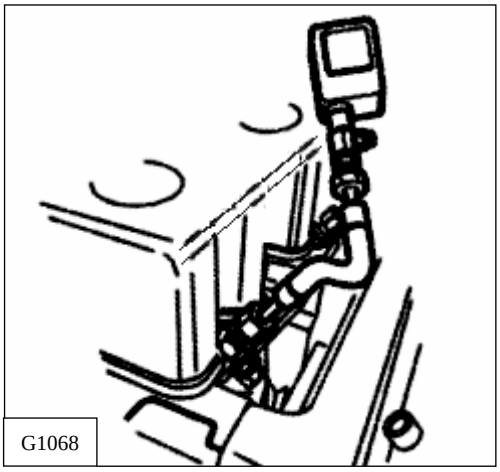

2.1.10. Injection nozzle

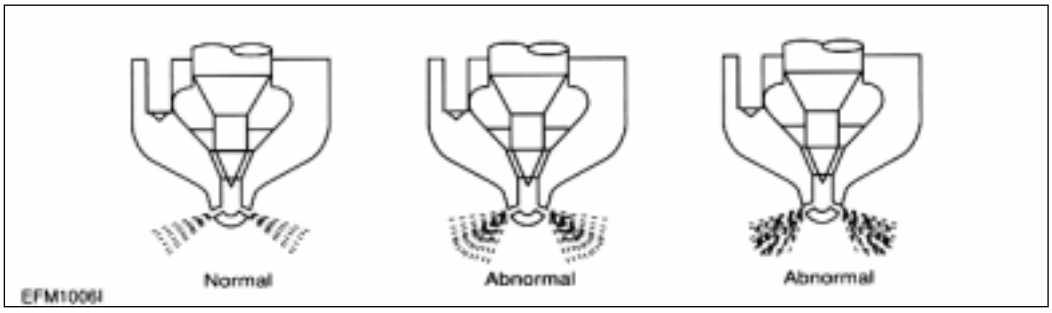

- Install a nozzle on the nozzle tester.
- If the inspected injection pressure is less than the specified value, adjust using the adjusting shims.

Engine Model	D1146	D1146TI	DE08TIS
Opening pressure	210 kg/cm^2	214 kg/cm^2	1st : 160 kg/cm^2 2nd : 220 kg/cm^2

- Check the atomizing state and replace it if abnormal.

2.1.11. Fuel injection pump

- Check the housing crack, damage etc. and replace it if abnormal.

https://truckmanualshub.com/

- Check if the idle operation and speed regulating lever's sealing is removed.
- The adjustment and testing of fuel injection pump should necessarily be done at the test bench.

2.1.12. Battery

- Inspect for any leakage of electrolytic solution owing to battery crack, and replace

the battery in case of poor condition.

- Inspect for amount of electrolytic solution, and replenish if insufficient.
- Measure the gravity of electrolytic solution, if less than specified value (1.12 1.28), replenish.

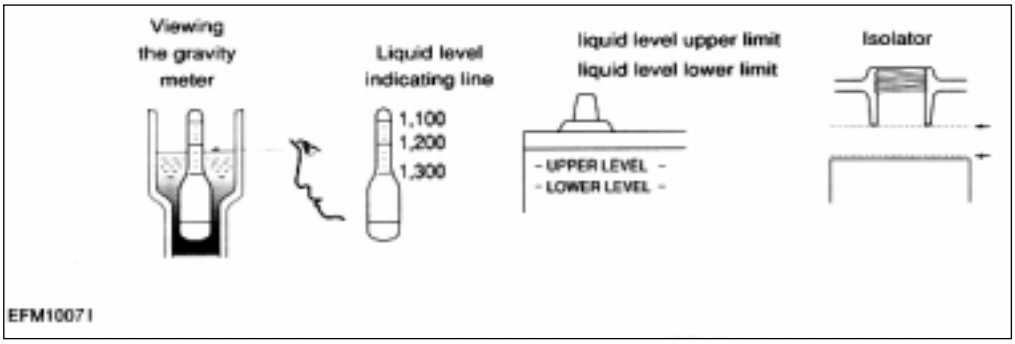

2.1.13. Air removal of fuel system

The suction room of fuel injection pump has the function of air removal continuously during the operation through a relief valve.

In case that the suction room lacks fuel at all, for instance, in case of new installation of injection pump, after loosening the air removing screws of cartridge filter respectively, remove the air by operating the manual pump of fuel supply pump until bubble will disappear.

2.1.14. Fuel supply pump

Every time of engine oil replacement, the fuel strainer installed at the fuel supply pump should be removed and cleaned.

2.1.15. Turbocharger

The turbocharger needs not arty special equipment.

Every time of engine replacement, a leakage or clogging of oil pipes should be inspected. Air cleaner should be maintained carefully for nut or foreign material not to get in. Periodic inspection should be applied on the compressed air and exhaust gas

https://truckmanualshub.com/

pipes, For leaking air will bring the overheat engine, an immediate repair must be done.

During the operation that is surrounded by the dust and oil mixed air, frequent cleaning must be done on the impellers. Tear down the impeller casing (attention: be careful not to bend) and must clean with non-acid solvent solution. If necessary, use plastic scraper If impeller is severely polluted, dip the impeller into solution and may be better to clean it with stiff brush.

Then one thing to beware is to dip only impeller part and so do not support by impeller but bearing housing.

2.1.16. Starting motor

In case of engine maintenance, clean pinion and ring gear thoroughly putting in the fuel, and coat them with grease.

Also, In case of washing engine (room) and so forth, inspect the wiring state being careful for water not to get in.

https://truckmanualshub.com/

2.2. Diagnosis and Remedy

- The following description summarizes the probable cause of and remedy for generall failure by item.
- Immediate countermeasures should be taken before a failure is inflamed if any symptom is detected.

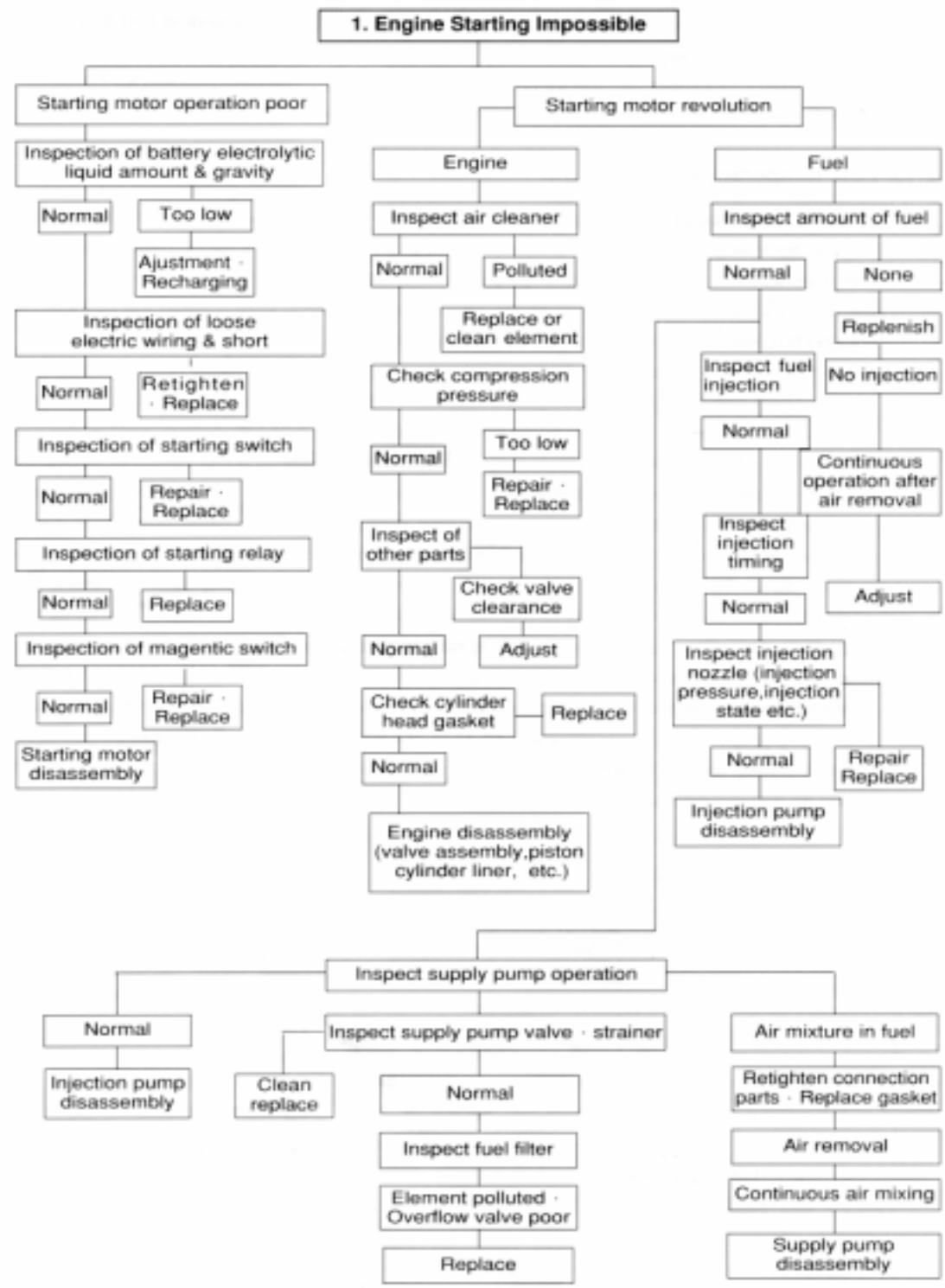

https://truckmanualshub.com/

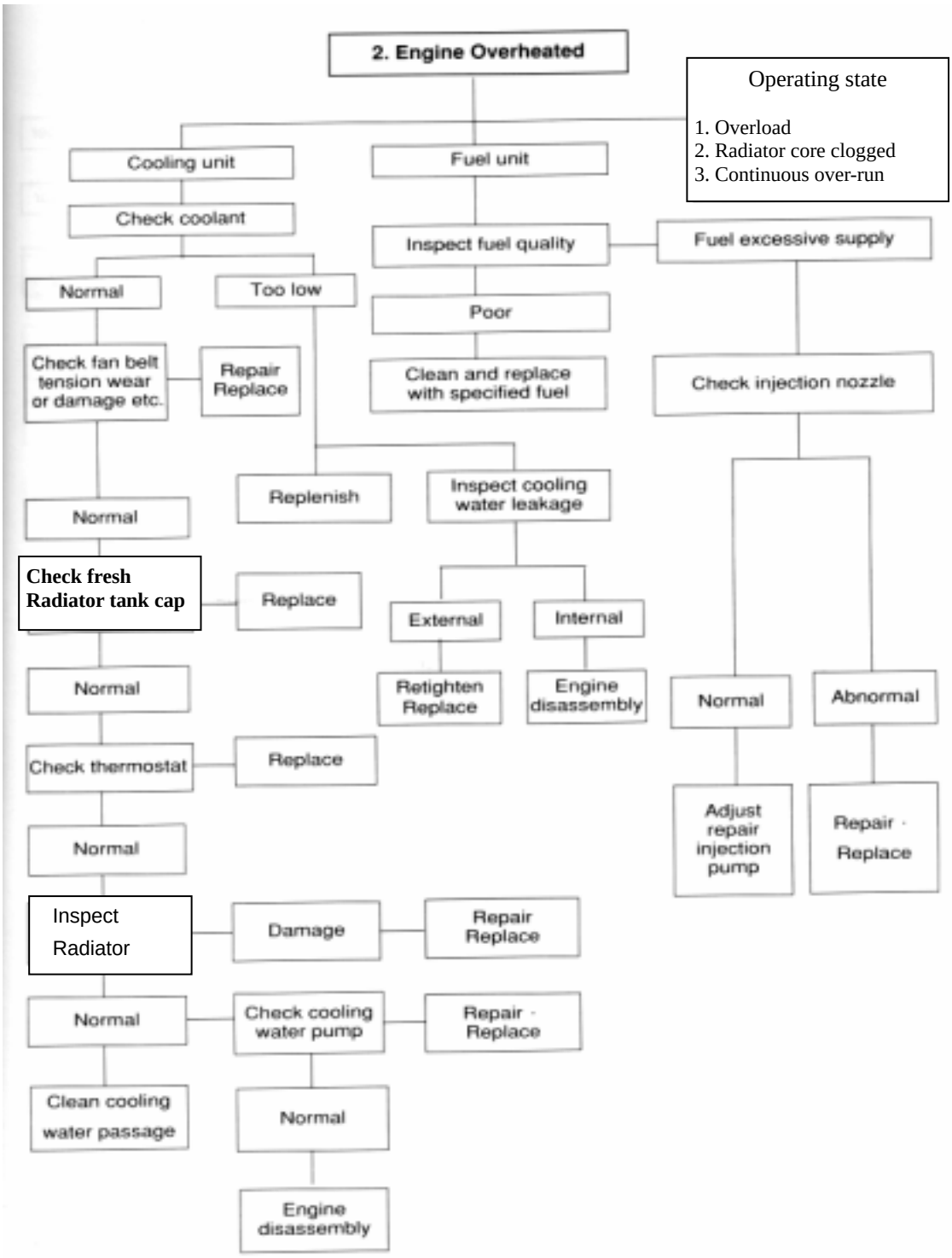

https://truckmanualshub.com/

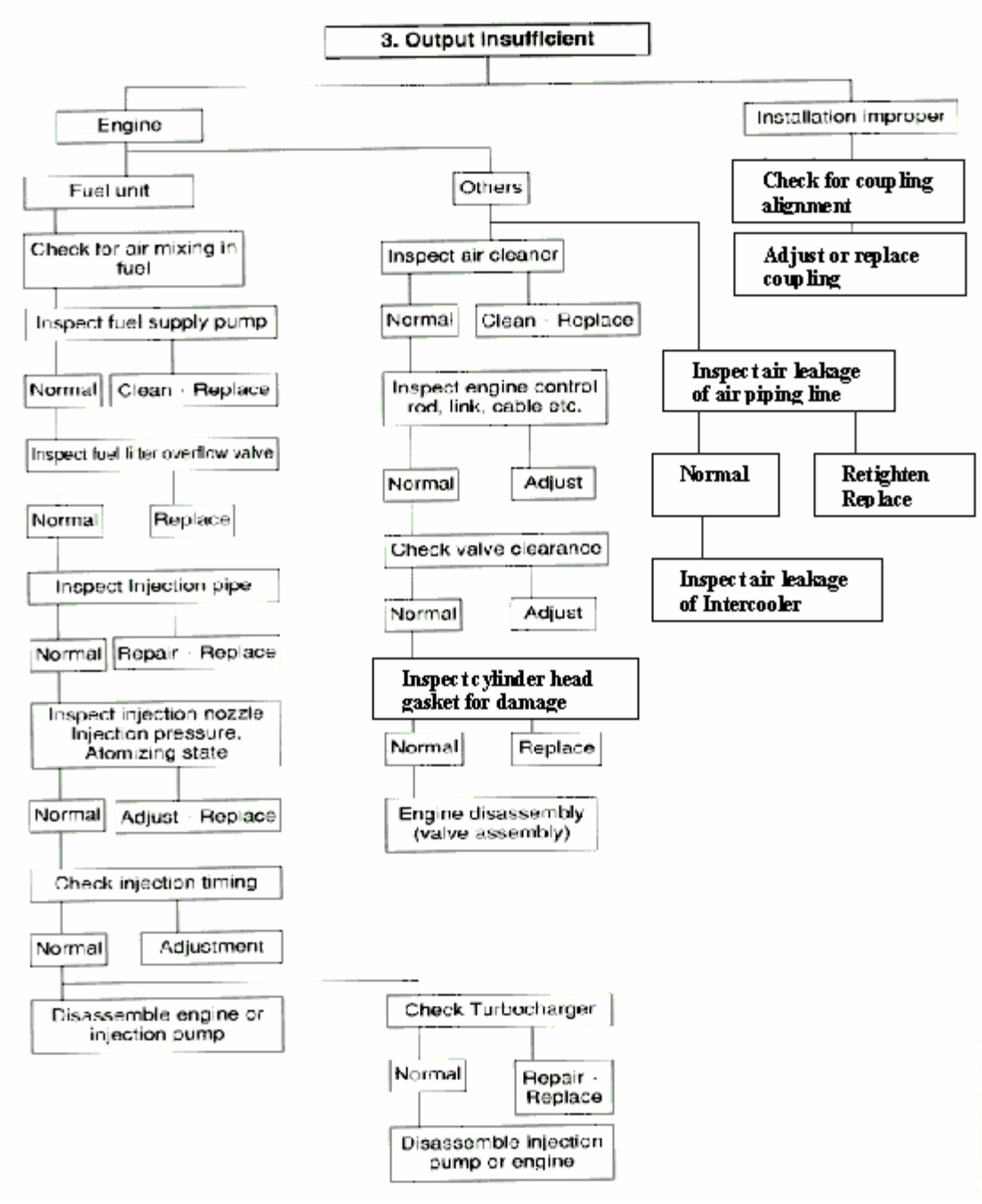

https://truckmanualshub.com/

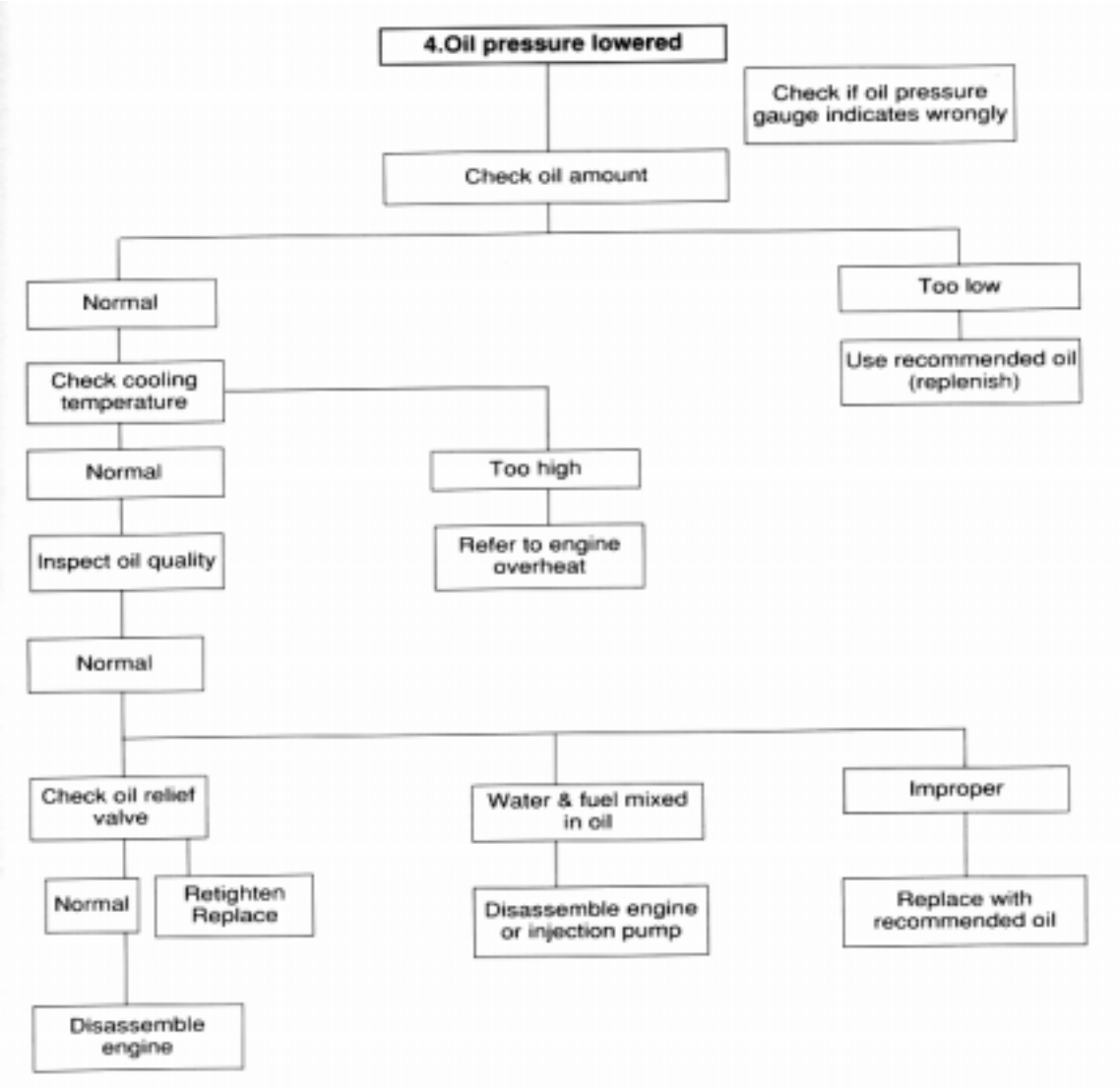

https://truckmanualshub.com/

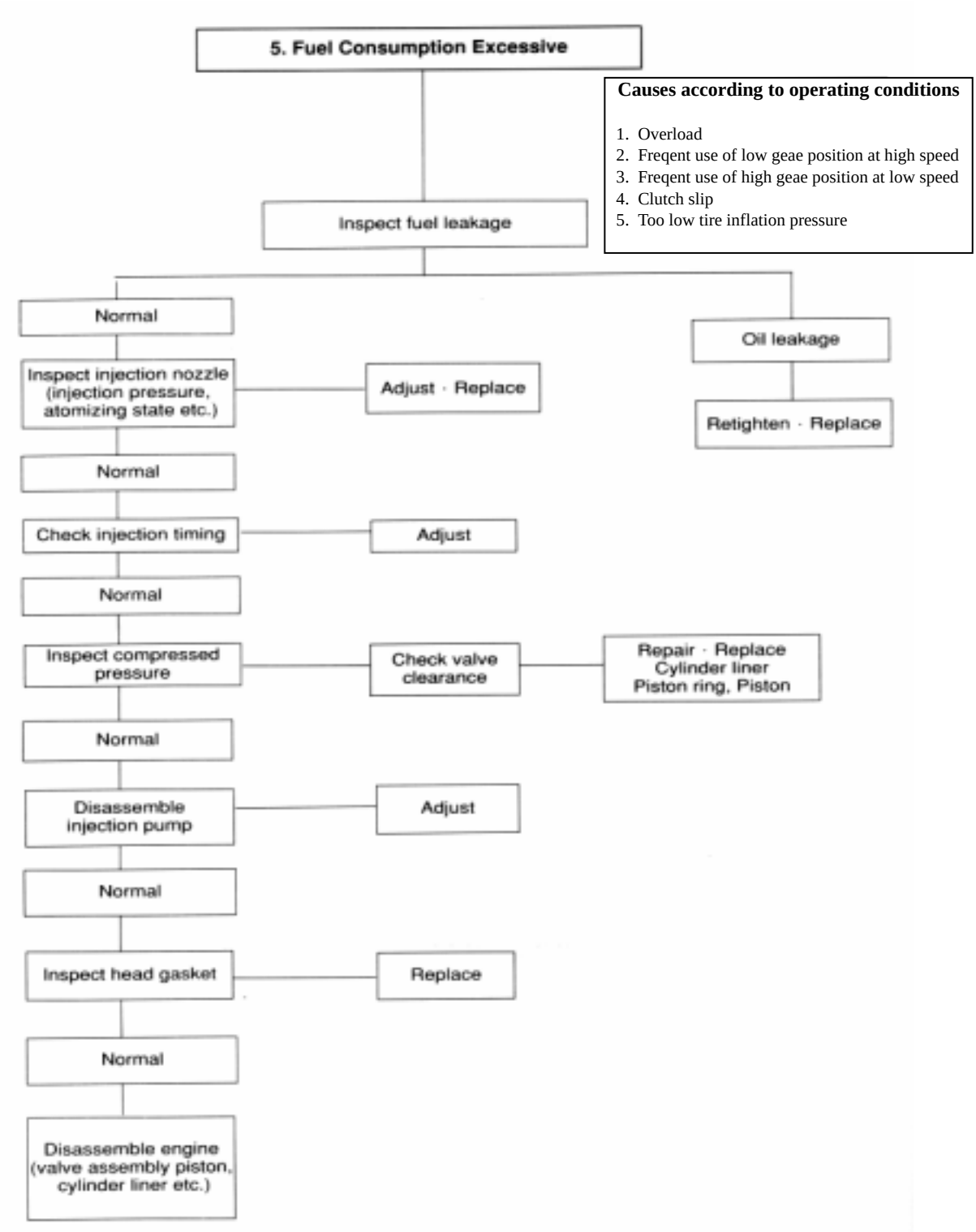

https://truckmanualshub.com/

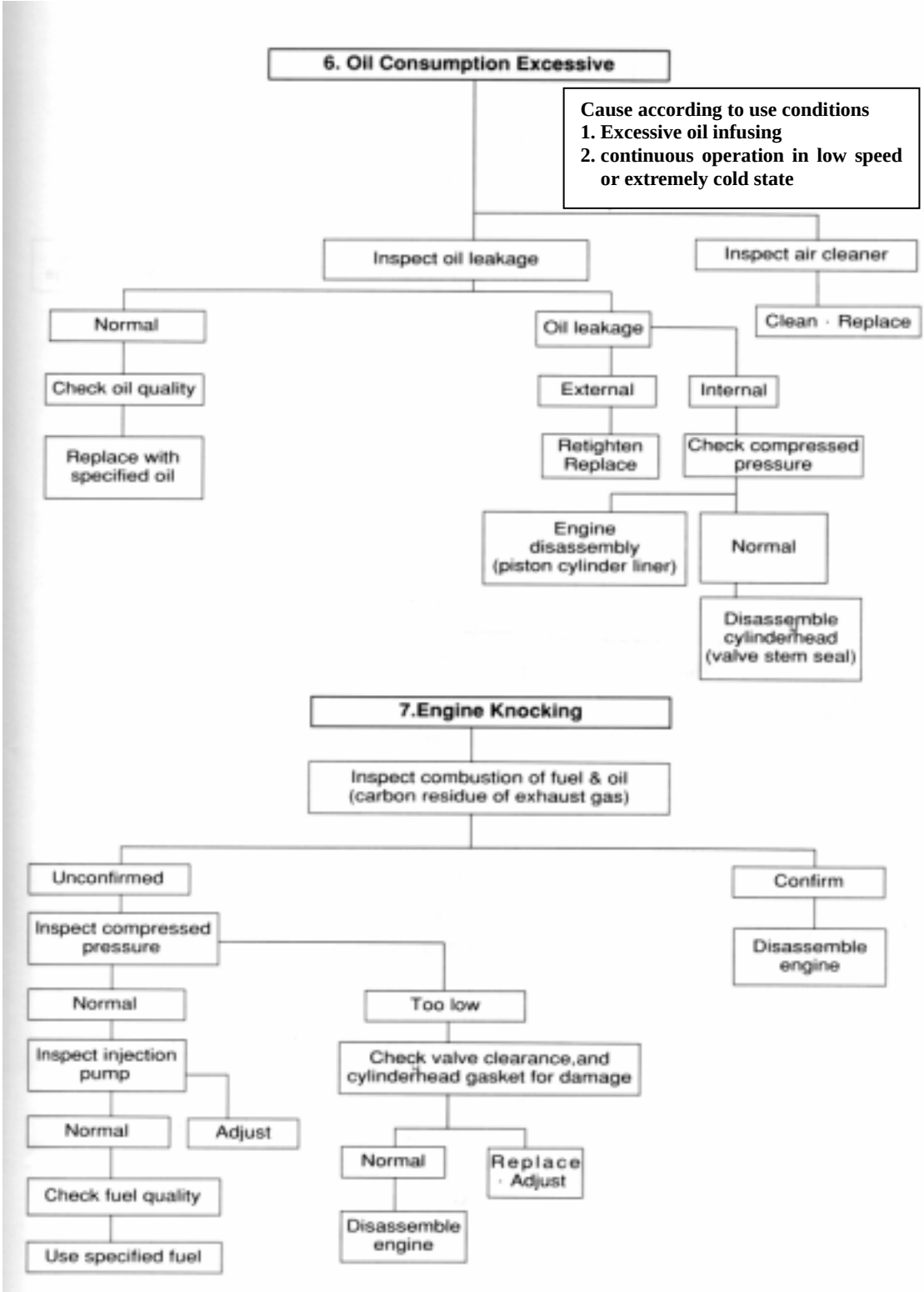

https://truckmanualshub.com/

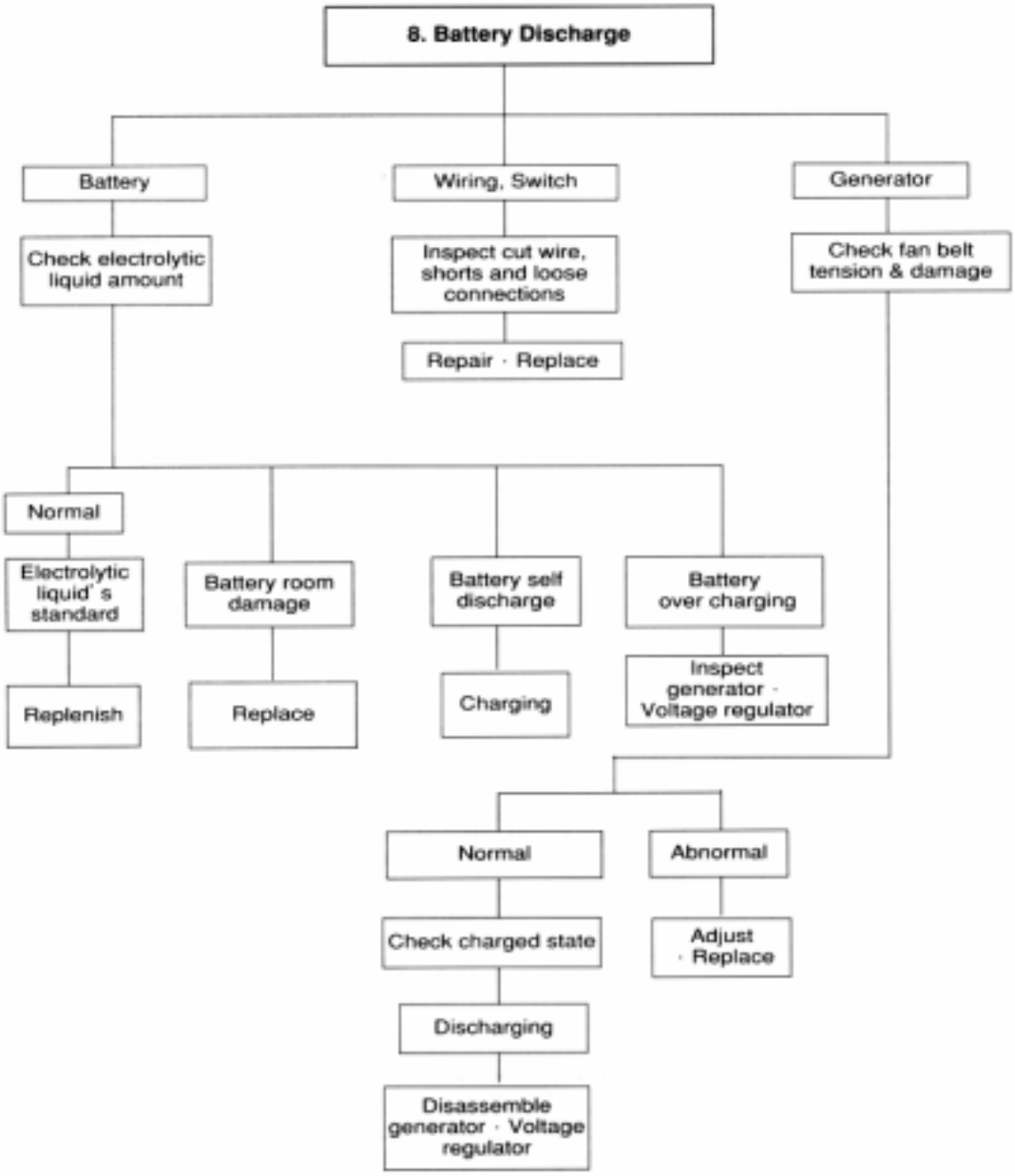

https://truckmanualshub.com/

Condition	Causes	Remedies
1) Starting difficult (1) Compression pressure lack	● Valve's poor shut, stem distortion ● Valve spring damage ● Cylinder head gasket's leak ● Wear of piston, piston ring or liner	Repair or replace Replace valve spring Replace gasket Adjust
2) Idle operation abnormal	● Injection timing incorrect ● Air mixing at injection pump	Adjust Remove air
3) Engine output insufficient (1) Continuous output insufficient	● Valve clearance incorrect ● Valve tightness poor ● Cylinder head gasket's leak ● Wear, stick, damage of piston ring ● Injection timing incorrect ● Fuel injection amount insufficient ● Nozzle injection pressure improper or stuck ● Supply pump's function lowered ● Fuel pipe system clogged ● Air suction amount insufficient ● Turbocharger poor	Adjust Repair Replace gasket Replace piston ring Adjust Adjust injection pump Adjust or replace Repair or replace Repair Clean or replace air cleaner Repair or replace
(2) Output insufficient when in acceleration	● Compression pressure insufficient ● Injection timing incorrect ● Fuel injection amount insufficient ● Injection pump timer's function insufficient ● Nozzle infection pressure, infection angle improper ● Supply pump's function lowered ● Air intake amount insufficient	Disassemble engine Adjust Adjust injection pump Repair or replace Repair, replace Repair or replace Clean or replace air cleaner
4) Overheating	● Engine oil insufficient or poor ● Cooling water insufficient ● Fan belt loosened, worn, damaged ● Cooling water pump's function lowered ● Water temp. regulator's operation poor ● Valve clearance incorrect ● Exhaust system's resistance increased	Replenish or replace Replenish or replace Adjust or replace Repair or replace Replace Adjust Clean or replace

https://truckmanualshub.com/

Condition	Causes	Remedies
5) Engine noisy	For noises arise compositely such as rotating parts, lapping parts etc., there is necessity to search the cause of noises accurately.	
(1) Crankshaft	● As the wear of bearing or crankshaft progress, the oil clearances increase. ● Lopsided wear of crankshaft ● Oil supply insufficient due to oil passage clogging ● Stuck bearing	Replace bearing & grind crankshaft Grind or replace Clean oil passage Replace bearing & Grind
(2) Con.-rod and Con.-rod bearing	● Lopsided wear of con rod bearing ● Lopsided wear of crank pin ● Connecting rod distortion ● Stuck bearing ● Oil supply insufficiency as clogging at oil passage progresses	Replace bearing Grind crankshaft Repair or replace Replace & grind crankshaft Clean oil passage
(3) Piston, piston pin & Piston ring	● Piston clearance increase as the wear of piston and piston ring progresses ● Wear of piston or piston pin ● Piston stuck ● Piston insertion poor ● Piston ring damaged	Replace piston & piston ring Replace Replace piston Replace piston Replace piston
(4) Others	● Wear of crankshaft, thrust bearing ● Camshaft end play increased ● Idle gear end play increased ● Timing gear backlash excessive ● Valve clearance excessive ● Abnormal wear of tappet, cam ● Supercharger inner part damaged	Replace thrust bearing Replace thrust plate Replace thrust washer Repair or replace Adjust valve clearance Replace tappet, cam Repair or replace
6) Fuel Consumption Excessive	● Injection timing incorrect ● Fuel injection amount excessive	Adjust Adjust injection pump

https://truckmanualshub.com/

Condition	Causes	Remedies
7) Oil Consumption Excessive		
(1) Oil level elevated	● Clearance between cylinder liner & piston	Replace
	● Wear of piston ring, ring groove ● Piston ring's damage, stick, wear ● Piston ring opening's disposition improper ● Piston skirt part damaged or abnormal wear ● Oil ring's oil return hole clogged ● Oil ring's contact poor	Replace piston, piston ring Replace piston ring Correct position Replace piston Replace piston ring Replace piston ring
(2) Oil level lowered	● Looseness of valve stem & guide ● Wear of valve stem seal ● Cylinder head gasket's leak	Replace in set Replace seal Replace gasket
(3) Oil leak	● Looseness of connection parts ● Various parts' packing poor ● Oil seal poor	Replace gasket, repair Replace packing Replace oil seal

https://truckmanualshub.com/

2.3. Engine Inspection

2.3.1. Stopping engine

After checking the engine for any unusual condition at the idling speed, then turn the key switch to stop the engine.

2.3.2. General engine inspection cycle

O : Check & adjust ● : Replace

Inspection		Daily	Inspection time(km)					Remark
			1,000	10,000	15,000	20,000	40,000	
Cooling System	Check for leakage(hoses, clamp)	O						
	Check the water level	O						
	Check the V-belt tension	O						
	Change the coolant water						●	
Lubrication System	Check for leakage	O						
	Check the oil level gauge	O						
	Change the lubricating oil		● 1st			(O)		
	Replace the oil filter cartridge		● 1st			(O)		
Intake & Exhaust System	Check the leakage for intercooler (hoses, clamp)	O						
	Clean and change the air cleaner element	O						
Fuel System	Drain the water in separator			O				
	Clean the fuel strainer of fuel feed pump			O				
	Check the fuel line leakage	O						
	Check fuel Injection timing							When necessary
	Replace the fuel filter cartridge					●		
	Check the injection nozzles							When necessary
Engine Adjust	Check the exhaust gas state	O						
	Check the battery charging	O						
	Check the compression pressure						O	When necessary
	Adjust Intake/Exhaust valve clearance							When necessary

* (O) The engine oil change interval is determine by engine use and oil grade.

2.3.3. Use of original parts for repair and replacement

For engine is being mechanically harmonized with many parts, only when the original parts that the manufacture recommends to use is used, the engine trouble would be preventively maintained and capable to keep up the maximum performances.

For the analogous parts not the original parts are poor in qualities and gives illl performances, it may rather bring early engine failure.

https://truckmanualshub.com/

3. MAINTENANCE

3.1. Engine Disassembly

3.1.1. Heed at disassembly

- Before disassembly, the part shelf should be prepared for various tools and repair parts.
- When assembling, clean empty hand should be used and clean environment maintained.
- In case of storing the disassembled parts, each part should not touch each other.
- In case of disassembly, the parts should be laid in order.

3.1.2. Oil level gauge

- Pull out the oil level gauge.

3.1.3. Cooling water

- Remove the radiator cap. Open the drain valve at the radiator lower part to drain the coolant as the right figure.

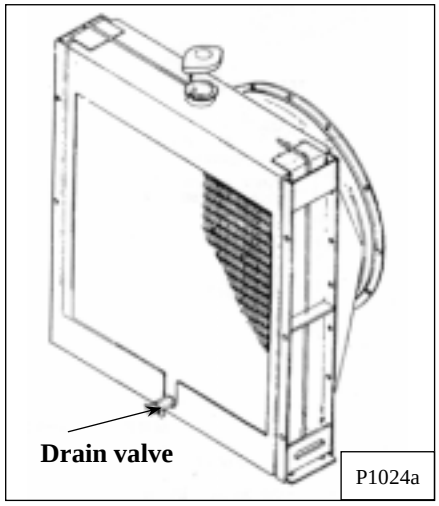

P1024a

CAUTION:

When removing radiator filler cap while the engine is still hot, cover the cap with a rag, then turn it slowly to release the internal steam pressure. This will prevent a person from scalding with hot steam spouted out from the filler port.

- Remove the drain plug from the cylinder block and drain out the cooling water into a container.

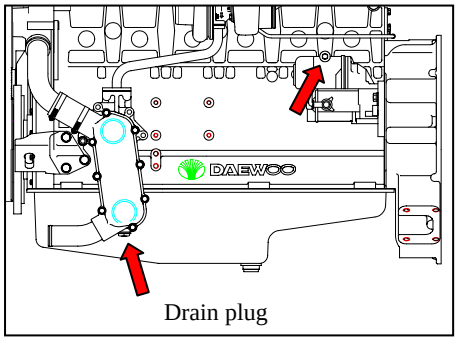

https://truckmanualshub.com/

3.1.4. Engine oil

- Remove the oil drain plug of oil pan and pour the engine oil into the prepared vessel.

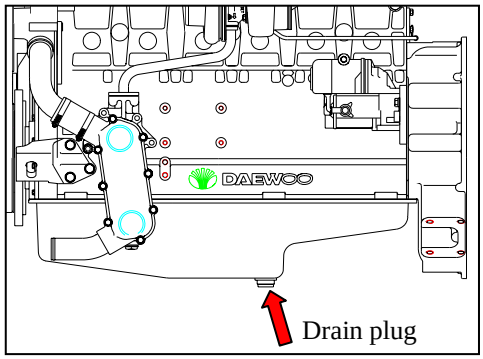

3.1.5. Cooling fan

- Remove the flange fixing bolts, then take off the flange and cooling fan.

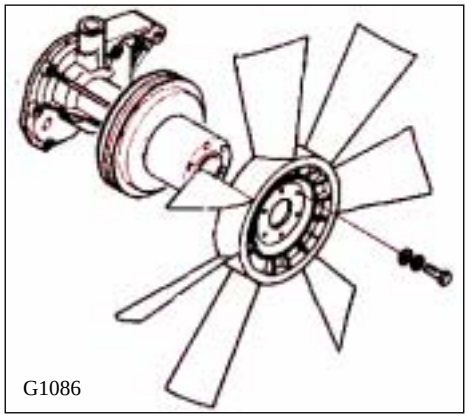

3.1.6. Belt

- Loosen the tension adjusting bolts of the alternator and the idle pulley, and take off the belts.

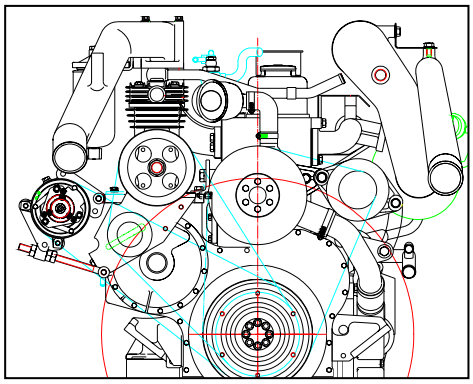

3.1.7. Thermostat

- Loosen the rubber hose connected to the cooling water pipe and remove the thermostat.
- Remove the rubber hose of the by-pass line.

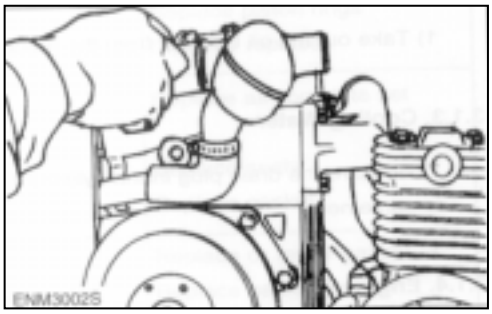

https://truckmanualshub.com/

3.1.8. Starter

- Unscrew the starter fixing nuts and remove the starter being careful not to damage its gears.

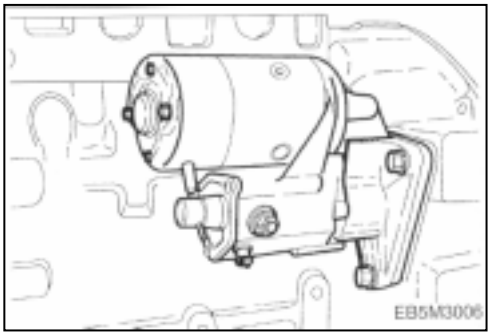

3.1.9. Fuel filter

- Remove the hollow screws of filter and tear down fuel supply and discharge rubber hose.
- Remove fuel filter fixing bolts and disassemble the fuel filter.
  (If the fuel filter is of cartridge type, disassemble the cartridge element only.)

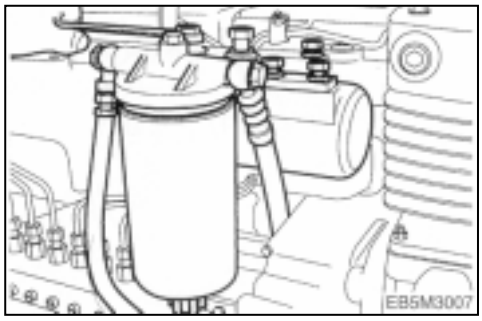

3.1.10. Breather

- Loosen the clamp screw to remove the rubber hose.

3.1.11. Intercooler (D1146TI, DE08TIS)

- Tear down the various hoses and air pipes from the inter cooler.
- Remove the intercooler fixing bolts and tear it down.

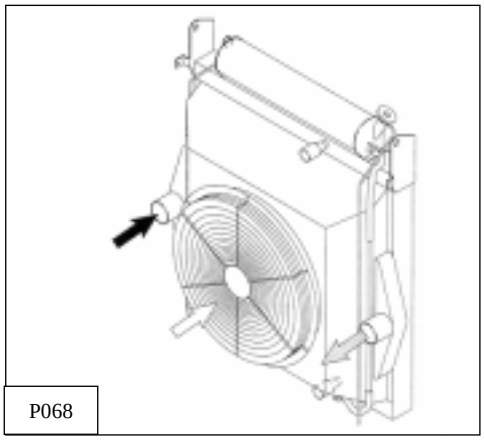

https://truckmanualshub.com/

3.1.12. Alternator

- Remove the alternator fixing bolts and take off the alternator.

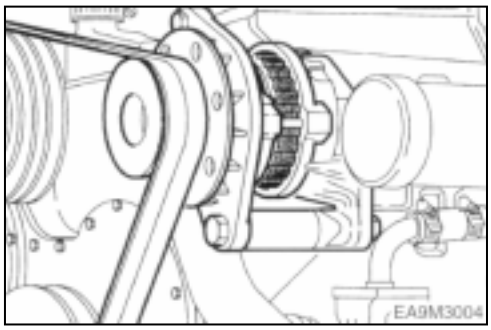

3.1.13. Oil cooler

- Loosen the cooling water pump and the rubber hose clamps of connected pipes, and disassemble it.
- Remove the oil cooler fixing bolts and take off the oil cooler.

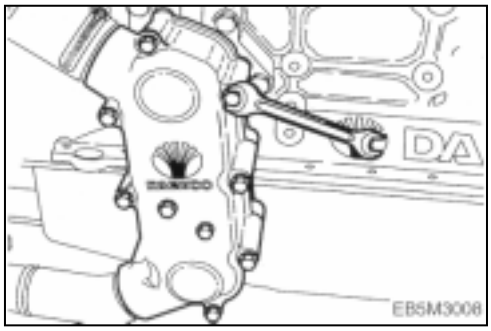

3.1.14. Oil filter

- Remove the oil filter fixing bolts and take off the oil filter.

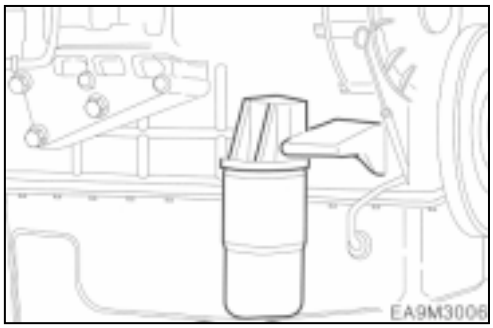

3.1.15. Power steering pump

- Remove the oil hose between power steering oil pump and control unit of the vehicle.
- Unscrew the power steering oil pump fixing bolts and remove the power steering pump.

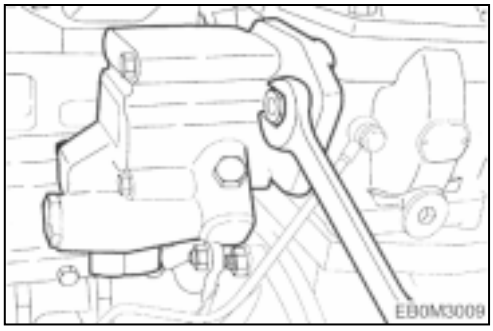

https://truckmanualshub.com/

3.1.16. Air compressor

- Remove the oil pipe between cylinder block and air compressor.
- Unscrew the air compressor fixing bolts and take off the air compressor.

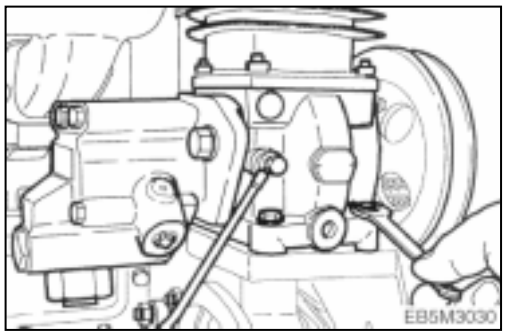

3.1.17. Idle pulley

- Unscrew the idle pulley fixing bolts and take off the idle pulley

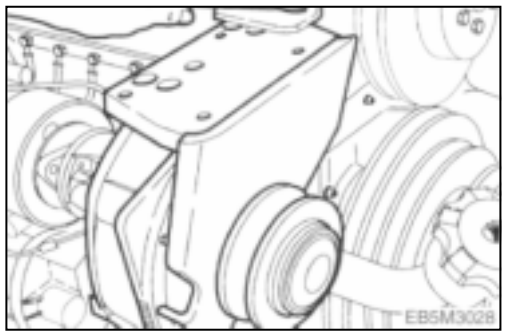

3.1.18. Water pump

- Unclamp the rubber hose connected to the oil cooler.
- Unscrew the water pump fixing bolts from the cylinder block and take off the water pump.

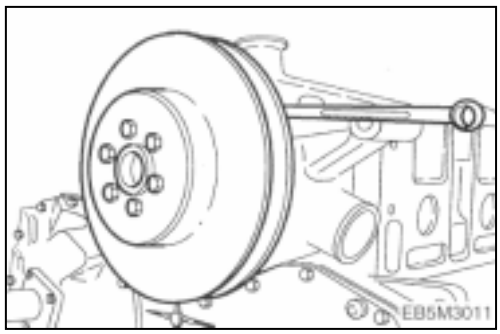

3.1.19. Cylinder head cover

- Remove the head cover fixing bolts and lift the cylinder head cover.

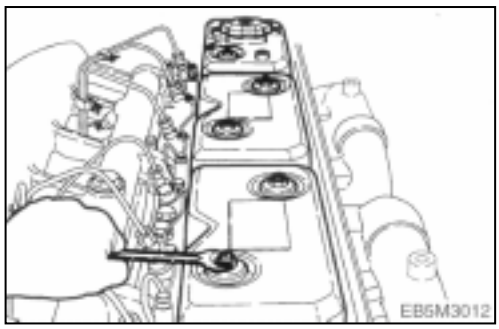

https://truckmanualshub.com/

3.1.20. Fuel injection nozzle

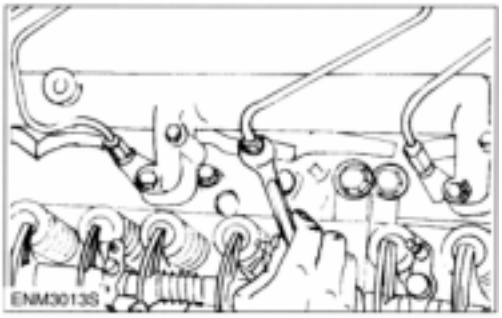

- Unscrew the fuel injection pipe between the injection pump and nozzle and take off the pipe.
- Install a special jig on the nozzle holder, and then pull out the nozzle as striking the hammer of the jig backwardly.

Take care not to damage the nozzle at disassembly.

- Take out the seal ring from the nozzle hole of the cylinder head and discard it.

3.1.21. Turbo charger (D1146TI, DE08TIS)

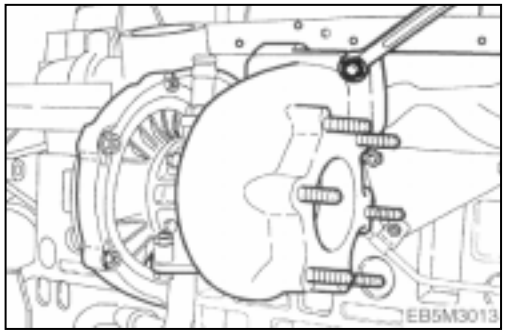

- Remove the oil supply pipe and oil return pipe between the turbo charger and the cylinder block.
- Unclamp the rubber hose connected the intercooler and air cleaner.
- Unscrew the turbo charger fixing nuts and take off the turbo charger from the exahust manifold.

3.1.22. Exhaust manifold

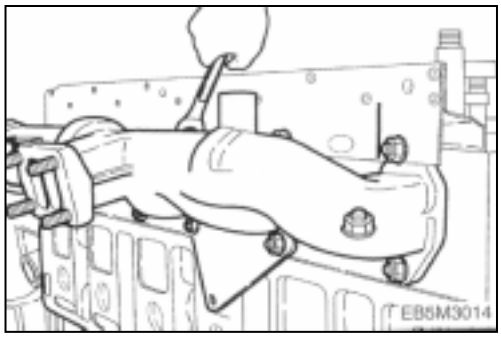

- Unscrew the exhaust manifold fixing nuts and remove the heat shield from the exhaust manifold.
- Then disassemble the exhaust manifold and gasket.
- Scrap the used gasket.

https://truckmanualshub.com/

3.1.23. Intake manifold

- Unscrew the intake manifold fixing bolts and remove the intake manfold from the cylinder head.
- Disassemble the intake manifold gasket and discard it.

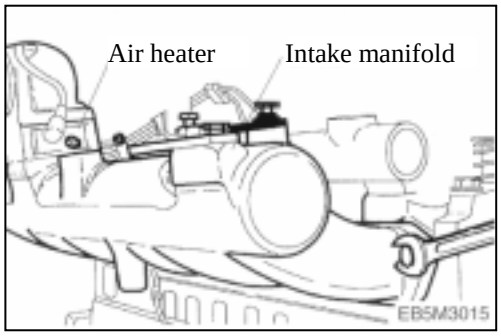

3.1.24. Cooling water pipe

- Unscrew the cooling water pipe fixing bolts and remove the cooling water pipe from the cylinder head.
- Remove the cooling water pipe gasket and finish the surface with a scraper.

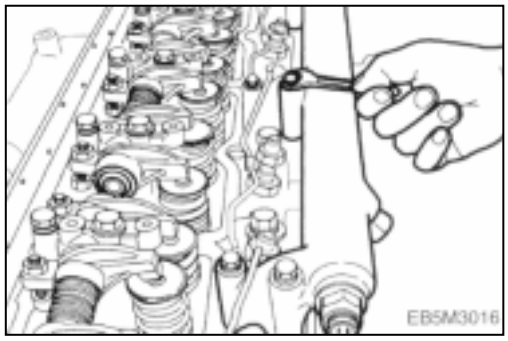

CAUTION :
Be sure that piece of the gasket do not come into the cooling water passage.

3.1.25. Rocker arm

- Remove the rocker arm bracket fixing bolts in reverse order (zigzag method) of assembling and disassemble the rocker arm.
- Take out the push rod upwards.
- Disassembly of rocker arm assembly
  - Remove the snap ring fron the both ends of rocker arm shaft by means of a plier.
  - Remove the washer, rocker arm, bracket and spring from the rocker arm shaf in sequence.
  - Press out the rocker arm bush.

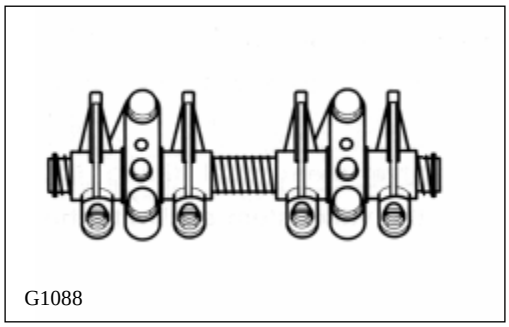

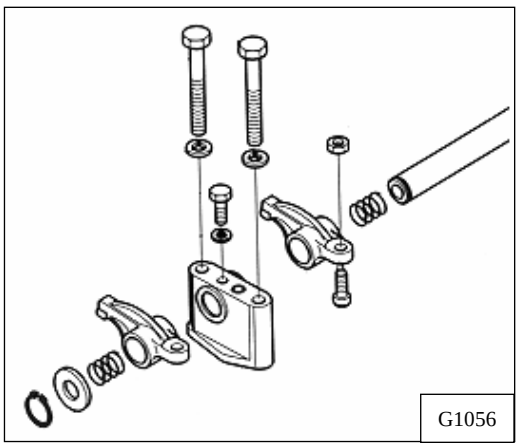

https://truckmanualshub.com/

CAUTION :
When reassembling the bush, cool the bush in dry ice and press the bush while aligning the bush with the oil hole of the rocker arm.

3.1.26. Cylinder head

- Remove the cylinder head bolts in the reverse order of tightening but remove it step by step.
  First step : Loosen 1 2 threads
  Second step : Remove by loosening fully.
  However, remove the total bolts simultaneously by the step of 1 and 2.
- Lay the removed bolts orderly not to damage the threads at all and store.

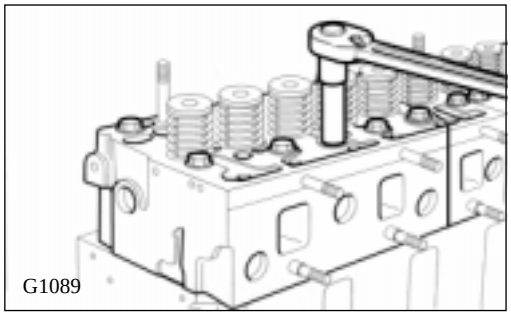
G1089

CAUTION :
Prevent a collision between the bolt thread each other.

- Take out the cylinder head gasket and scrap it.
- Remove the foreign residues from the cylinder head surface and block surface.

CAUTION :
Try not to make any damage on the contact surfaces.

- **Disassembly of cylinder head**
  - Place the cylinder head on a individual shelf.
  - As pressing the valve spring with a special tool, remove the cotter pin, valve spring.
  - Take out the intake and exhaust valves.

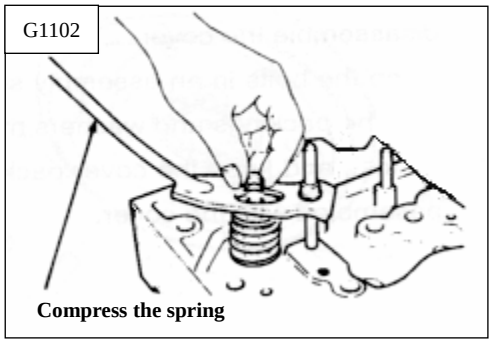
G1102
Compress the spring

https://truckmanualshub.com/

- For removal of the valve seat, apply arc welding work to two points of valve seat insert, and pull out the valve seat insert with inner extractor.

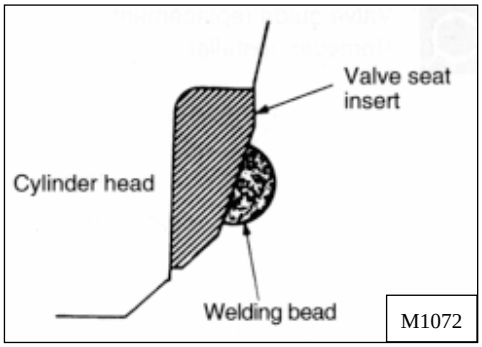

3.1.27. Oil pan

- Unscrew the oil pan fixing bolts and remove the oil pan.
- Remove the oil pan gasket and discard it.

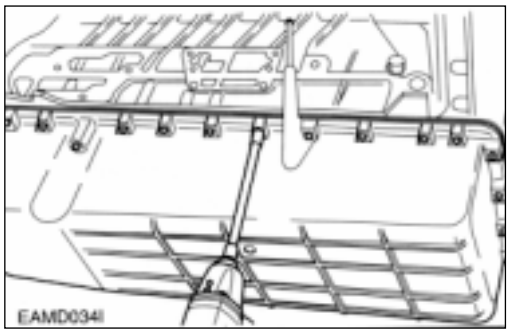

3.1.28. Vibration damper

- Unscrew the vibration damper fixing bolts in reverse sequence of installing sequence and remove the vibration damper assembly.

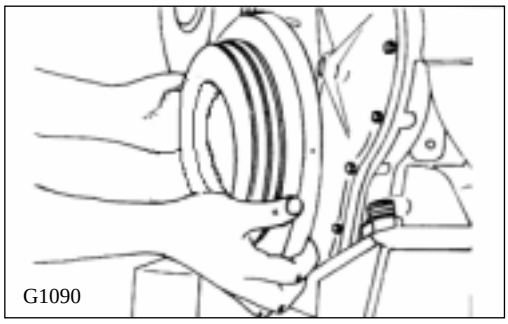

3.1.29. Timing gear case cover

- Disassemble the oil seal using an oil seal removing jig.
- Remove the cover fixing bolts and disassemble the cover from the timing gear case.

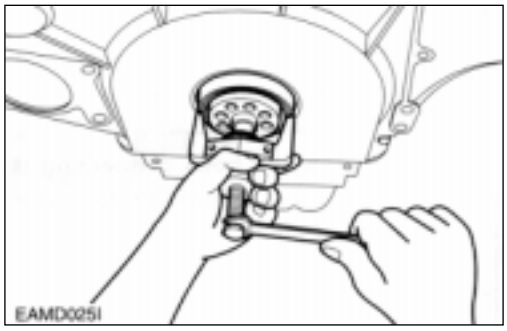

https://truckmanualshub.com/

3.1.30. Oil pump

- Unscrew the bracket fixing bolts of the oil suction pipe.
- Unscrew the pipe fixing bolts of oil pump and disassemble the suction and supply oil pipe.
- Unscrew the oil pump fixing bolts, and disassemble the oil pump.

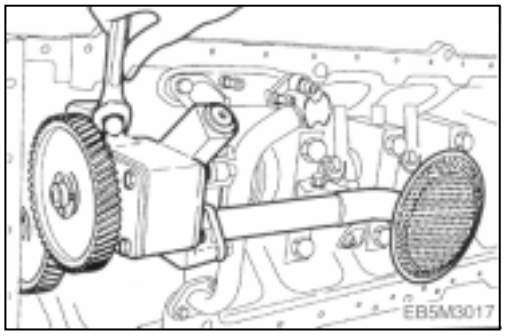

3.1.31. Piston and connecting rod

- Remove the connecting rod cap bolts in the reverse order of assembling but do same as the cylinder head bolt removal.
- Disassemble the upper/lower of connecting rod caps by tapping lightly with urethane hammer, and remove the bearing.
- By pushing the connecting rod with wooden bar from the direction of oil pan toward cylinder head, disassemble the piston assembly.
- The disassembled piston assembly should be handled to prevent bumping each other, and stored as the cylinder's order.
- In order for connecting rod cap not to be swapped, temporarily assemble to the corresponding connecting rod.

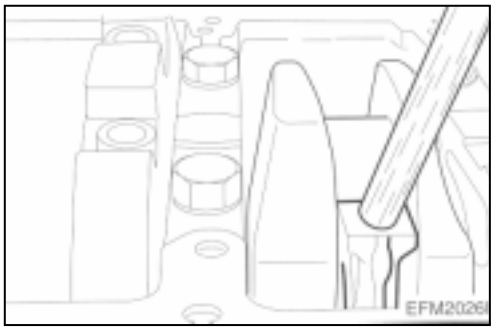

<Disassembly of piston>

(1) Remove the snap rings by means of a plier.

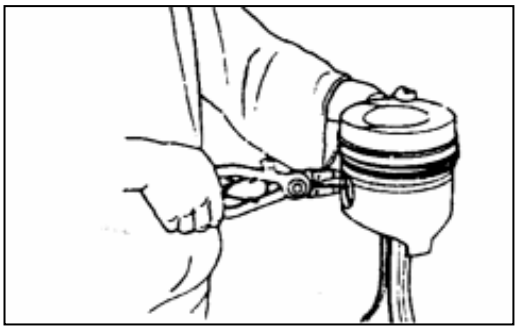

https://truckmanualshub.com/

(2) Heat the piston with a electric heater, then take out the piston pin from the piston as tapping it with a round wooden bar.

(3) Remove the piston ring with a plier.

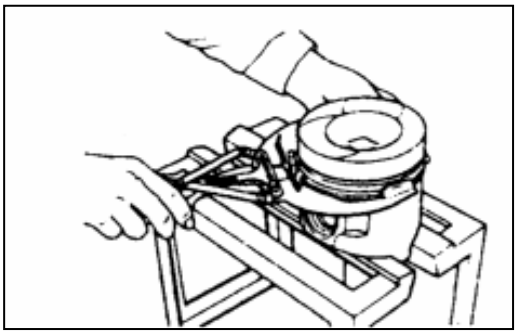

(4) Clean the piston thoroughly.

3.1.32. Cylinder liner

- Disassemble the cylinder liner with a special tool or hand but be careful not to generate any damage at cylinder block.

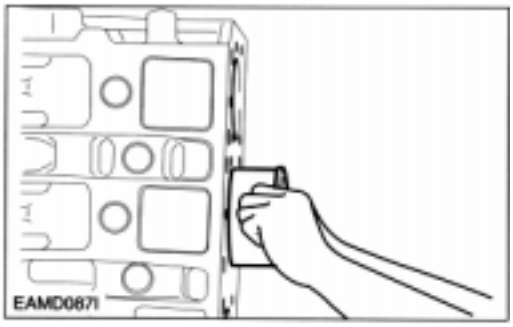

3.1.33. Cam shaft gear and idle gear

- Unscrew the camshaft gear fixing bolts and remove the camshaft gear.

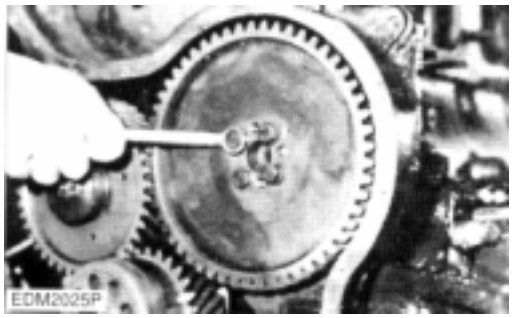

https://truckmanualshub.com/

- Unscrew two bolts fxing the idle gear, then remove the idle gear and its pin.

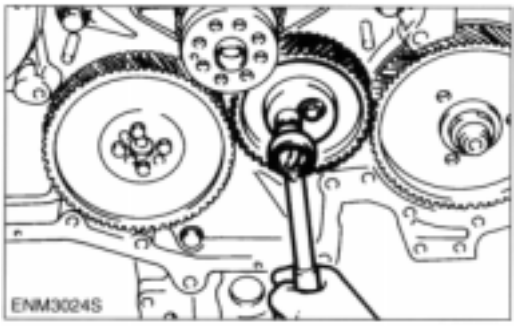

3.1.34. Fuel injection pump

- Disassembly the oil hose for lubrication.
- Remove the bolts and nuts of injection pump flange.
- Unscrew the injection pump fixing bolts and remove the injection pump by lifting it up.

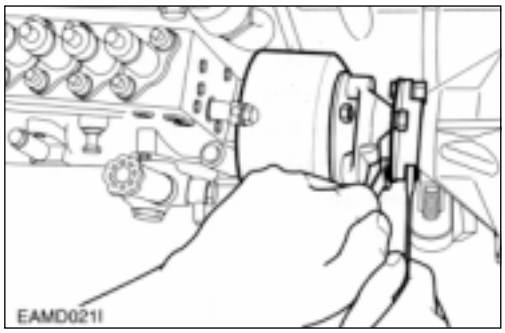

- Remove the bracket fixing bolts of injection pump, and disassemble by pulling the injection pump backward.

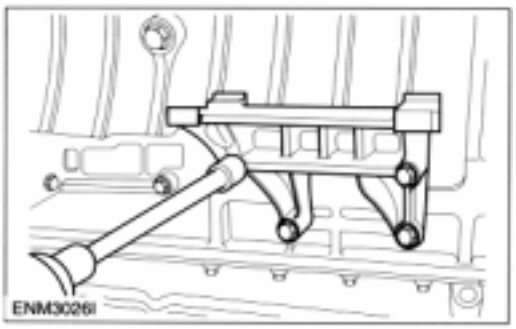

3.1.35. Water chamber cover

- Unscrew the fixing bolts and remove the water chamber cover.
- Remove the remnant gasket thoroughly.

3.1.36. Fly wheel

- Remove the flywheel fixing bolts and disassemble it.
- The bolt removal is done by the reverse order of assembling and by the steps.

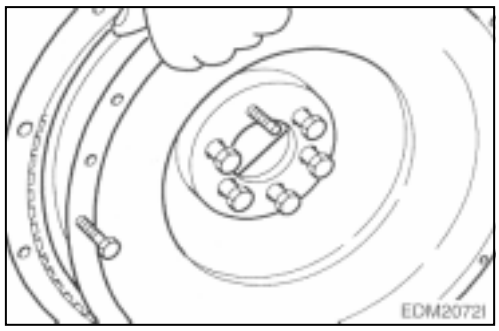

https://truckmanualshub.com/

3.1.37. Fly wheel housing

- Remove the flywheel housing fixing bolts and disassemble the flywheel housing.
- Disassemble the oil seal of flywheel housing.

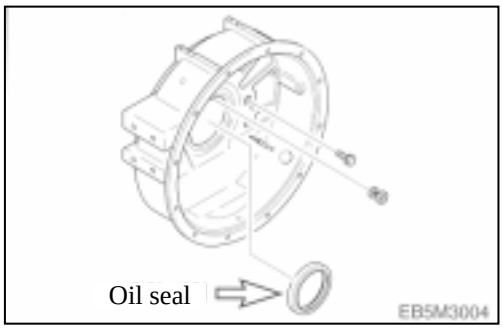

3.1.38. Injection pump drive gear

- Unscrew the drive gear housing fixing bolts and remove the drive gear assembly.

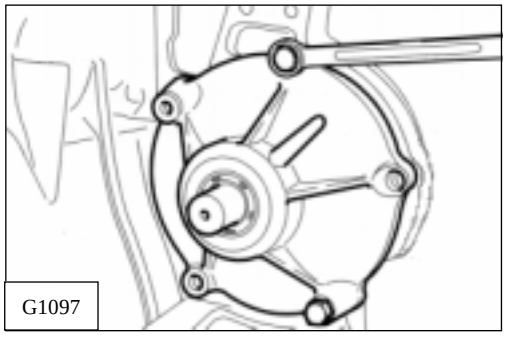

3.1.39. Timing gear case

- Remove the timing gear case assembling bolts.
- By tapping lightly with a urethane hammer the right and left back of timing gear case's connecting part, disassemble the timing gear case.

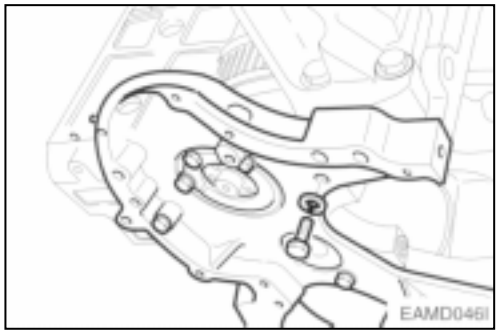

3.1.40. Bearing cap

- Remove the bearing cap assembling bolts by the step in the reverse order of assembling, and disassemble the bearing cap. (Remove by the same way as the cylinder head bolts' removal.)
- Disassembled bearing caps are kept laid in order.

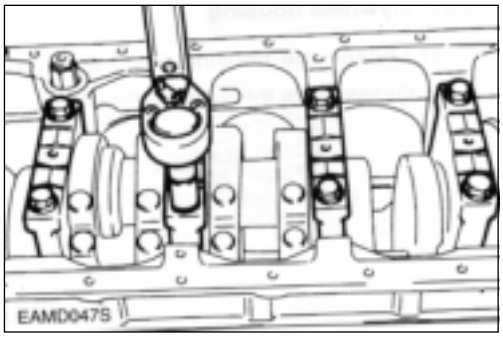

https://truckmanualshub.com/

3.1.41. Crankshaft

- Assemble the bolts on the both side of crankshaft temporarily.
- Connect the rope to the bolts and lift the crankshaft by means of crane being careful not to give any damage on it.
- In order for the disassembled crankshaft to be prevented from bends or damage, put it on the special lathe and store.
- Disassemble the metal bearings in turn and store them.

NOTES :

Do not mingle with the metal bearings and bearing caps randomly. To prevent mixing, temporarily assemble the metal bearings to the corresponding bearing caps in turn.

3.1.42. Camshaft and tappet

- In order for camshaft not to be damaged, disassemble turning it.
- In order for the disassembled camshaft to be prevented from bends or damage, put it on the special lathe and store.
- Pull out the tappet.
- As required, pull out the camshaft bush from the cylinder block by a press.
- Check for damage, scratch, wearing state and if abnormal, tear down.

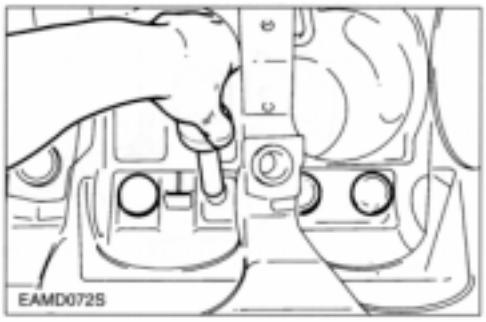

https://truckmanualshub.com/

3.1.43. Oil spray nozzle (D1146TI, DE08TIS only)

- Remove the valve screws of oil spray nozzle and disassemble it.

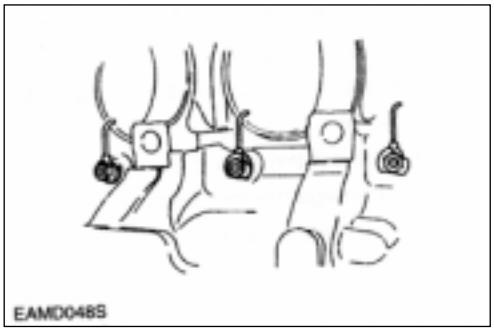

https://truckmanualshub.com/

3.2. Inspection and Measurement on Major Parts

3.2.1. Cylinder block

- Clean the cylinder block thoroughly, and check for any crack or damage.
- If there is any crack or severe damage, replace it and if there is minor one, correct it.
- Check for any clogging or corrosion in the oil passage and water passage.
- Carry out a leakage test for any crack or air leaking. (Hydraulic test)
- Plug each cylinder block's water and oil discharge ports, and apply the air pressure of about 4kg/cm^2 to intake port and soak it in water for about 1 minute to check if there is any leakage. (Water temperature : 70°C)

3.2.2. Cylinder head

(1) Cylinder head assembly & disassembly

1) Disassemble the cylinder assembly, and put it on the shelf for assembly or clean lathe.

CAUTION :
Prevent any damage to gasket's contact surface of the cylinder head.

2) Disassemble the cotter pin, spring, spring seat pushing valve spring by a special tool.

3) Pull out the intake and exhaust valves.
4) The disassembled parts are kept laid in turn.
5) Disassemble the valve stem seal.
6) By means of the special tool, punch, pull out a valve guide.

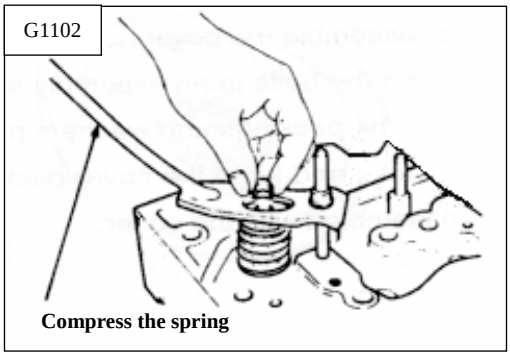

Compress the spring

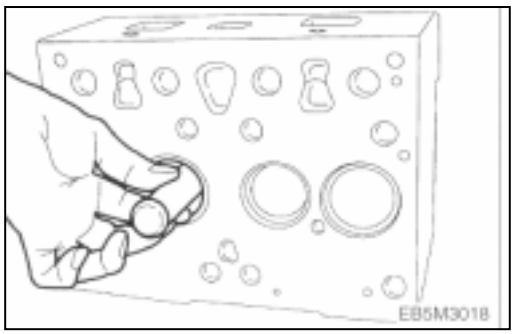

https://truckmanualshub.com/

(2) Inspection of cylinder head

1) Check for the cylinder head.

- Remove carbon from the cylinder head lower surface, and then should be careful not to scratch the surface.
- Check any crack or damage that can not found by naked eyes through the hydraulic or magnetic particle test.

2) Distortion of lower surface

- As shown in figure, measure the cylinder head's distortion at 6 directions with horizontal ruler and clearance gauge.
- If the measured value is beyond the limit value, correct it by means of the fine grinding paper or grinding machine.
- If it is beyond the max. allowable value, replace the cylinder head

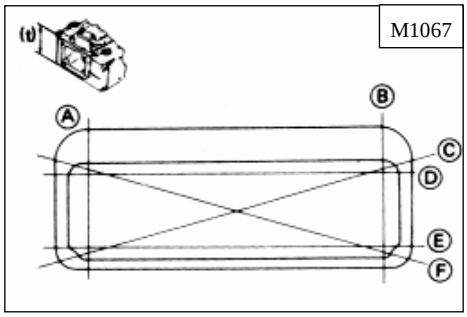

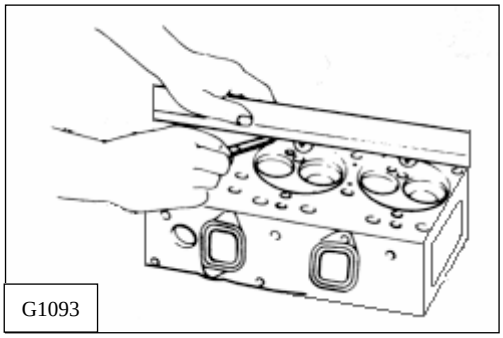

Lower face warpage and height

	Standard	Limit
Warpage	0.2 mm or less	0.3 mm
Thickness : t (reference)	109.9 ~ 110.1 mm	108.4 mm

3) Flatness

Check the flatness of the installing surface of cylinder head's intake and exhaust manifolds with horizontal ruler and clearance gauge.

Standard	Limit
0.05 mm	0.2 mm

4) The hydraulic test

The hydraulic test of cylinder head is same as the cylinder block test.

https://truckmanualshub.com/

(3) Inspection of valve and valve guide

1) Valve

After cleaning valve with fuel, check it.

- **Valve stem outer diameter**

  Measure the valve stem outer diameter at 3 positions (top, middle, and bottom), and check for any wear and if beyond the limit value, replace the valve.

Dimension / Description	Standard	Limit
Intake valve stem	ϕ8.950 ~ ϕ8.970 mm	ϕ8.93 mm
Exhaust valve stem	ϕ8.935 ~ ϕ8.955 mm	ϕ8.91 mm

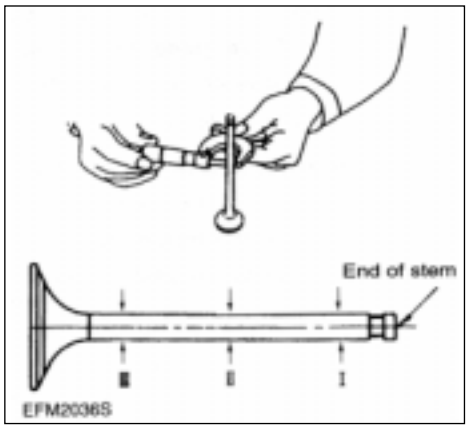

- **Valve seat contacting faces**

  Check the valve seat contact surface for any crack and wear, and if necessary, correct with grinding paper, and if excessive, replace it.

- **Valve head thickness**

  Measure the thickness of valve head and if beyond the limit value, replace the valve

Dimension / Description	Standard	Limit
Intake valve	2.7 mm	1 mm or less
Exhaust valve	2.2 mm	1 mm or less

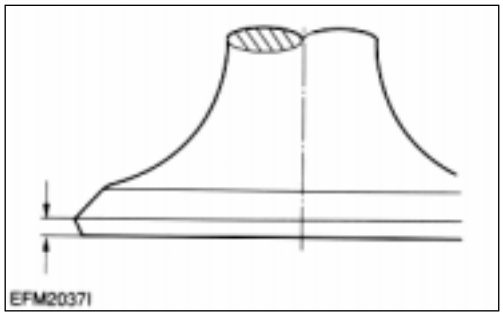

2) Valve guide

- Insert a valve into cylinder head and measure the clearance between valve guide and valve by valve movement. If the clearance is excessive, measure the valve and replace the excessively worn valve

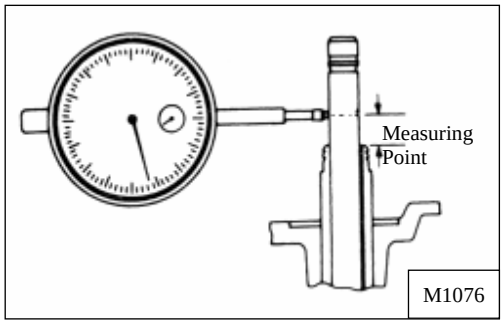

https://truckmanualshub.com/

or valve guide.

Valve stem end play

	Standard	Limit
Intake valve	0.04 ~ 0.07 mm	0.2 mm
Exhaust valve	0.06 ~ 0.09 mm	0.25 mm

- Assemble the valve at cylinder head's valve guide and see if it is centered with the valve seat using a special tool.

3) Valve seat

- **Contacting face amount**

  As for the valve seat's wear, measure the width of the contact surface with intake valve seat and exhaust valve seat. If beyond the limit value, replace the valve seat.

- Assemble the valve at the valve seat of the cylinder head, and check the amount of depression of the valve from the lower portion of the cylinder head using a dial gauge.

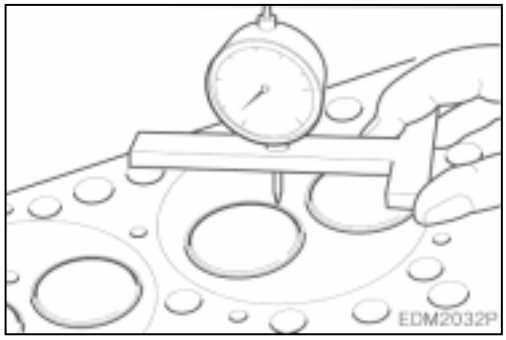

Valve depression

	Standard	Limit
Intake & Exhaust	0 ~ 0.3 mm	0.55 mm

If the amount of depression is beyond the specified limit, replace the valve seat.

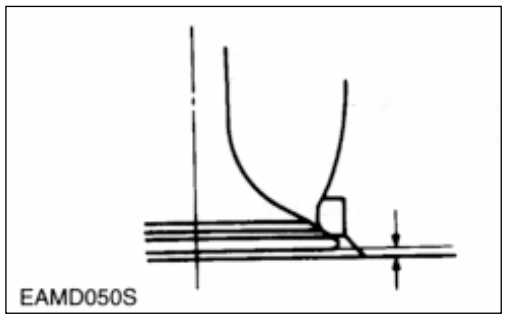

https://truckmanualshub.com/

- For the disassembling of valve seat, by welding the welding bead to a valve seat rotating tool or valve seat, pull it out with a special tool.

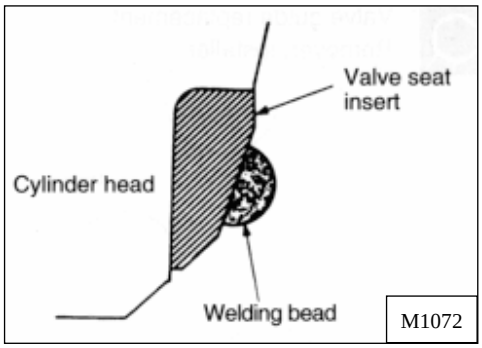

- For the assembling of a new valve seat, by putting it among the dry ices of an ice box previously for about 2 hours for the cold shrinkage, and press it in the cylinder head by a special tool. (bench press)
- Apply valve lapping compound to the valve head seating face on the valve seat and lap the valve seat by turning it until it is seated in position, then wipe out the lapping compound.

4) Valve spring

- **Visual check**

Check the appearance of valve spring and if necessary replace the spring.

- **Valve spring free length**

Use a vernier caliper to measure the valve spring free length.

If the measured value is less than the specified limit, the valve spring must be replaced.

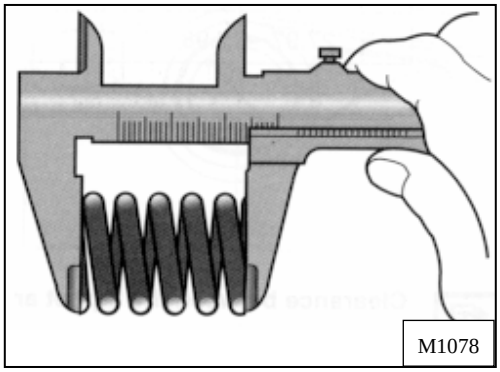

(mm)

Spring free Length		Standard
Intake valve		64 mm
Exhaust valve	Inner	D1146/TI : 60 DE08TIS : 73.8
	Outer	D1146/TI : 71 DE08TIS : 77.7

https://truckmanualshub.com/

- **Valve spring inclination**

Use a surface plate and a square to measure the valve spring inclination.

If the measured value exceeds the specified limit, the valve spring must be replaced.

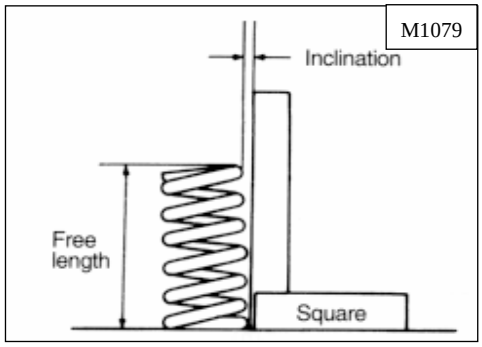

(unit : mm)	Standard	Limit
Valve Spring Inclination	Less than 1.8 mm	2.7 mm

- **Valve spring tension**

Use a spring tester to measure the valve spring tension if the measured value is less than the specified limit, the valve spring must be replaced.

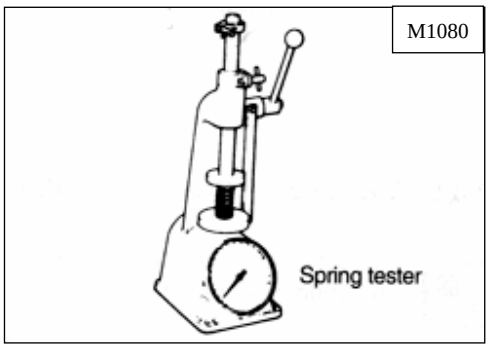

	Set Length		Spring force	Limit
Intake valve	Valve Spring Tension at 41mm Set Length		70 kg	± 3%
Exhaust valve	Inner	38 mm	D1146/TI : 28.6 kg	± 6 %
			DE08TIS : 38 kg	± 2kg
	Outer	41 mm	D1146/TI : 66 kg	± 5 %
			DE08TIS : 75kg	± 4kg

5) Assembling cylinder head

- Clean the cylinder head thoroughly.
- Replace the valve stem seal with new one, and by means of a special tool, press the stem seal into the valve guide of cylinder head.
- Coat engine oil to valve stem and valve guide and assemble the valve. However, be careful for the damage of valve stem seal.

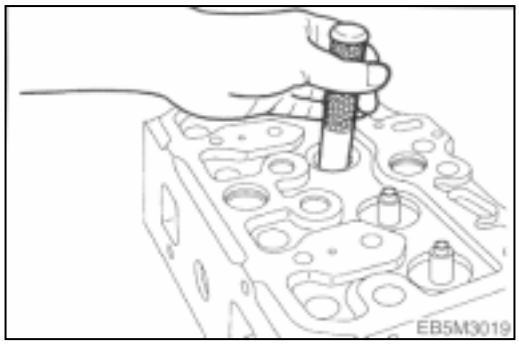

https://truckmanualshub.com/

- Install the lower seat of valve spring to the valve guide of cylinder head.
- After putting inner, outer springs, install the spring upper seat on it.
- Assemble the valve by inserting the valve cotter pressing the valve spring with a special tool.
- After installing the valve, check whether the valve is correctly installed or not tapping it lightly with urethane hammer.

3.2.3. Rocker arm assembly

(1) Disassembly

1) Disassemble the snap rings that are located at both ends of rocker arm shaft by a plier.
2) Disassemble in the order of washer, rocker arm bracket, rocker arm spring, rocker arm.

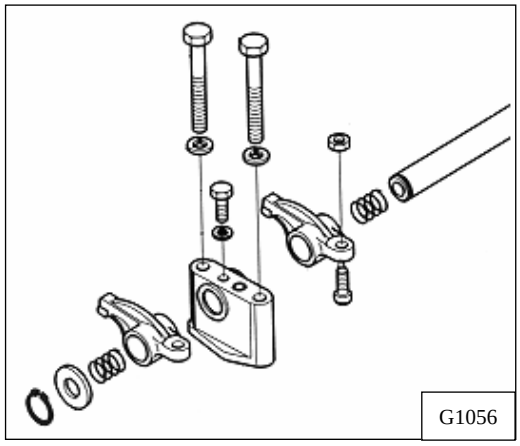

(2) Inspection of rocker arm assembly

1) Rocker arm shaft

- **Rocker arm shaft run-out**

  Place the rocker arm shaft on two V blocks and inspect the shaft for bend using a dial gauge.

  If the amount of this run-out is small, press the shaft with a bench press to correct the run-out Replace the shaft if the measured value exceeds the limit.

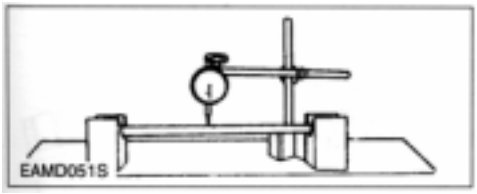

Limit	0.2 mm

https://truckmanualshub.com/

- **Rocker arm shaft diameter**

With an outside micrometer, measure the rocker arm shaft diameter at the point where the rocker arms have been installed.

Replace the rocker arm if the amount of wear is beyond the specified limit.

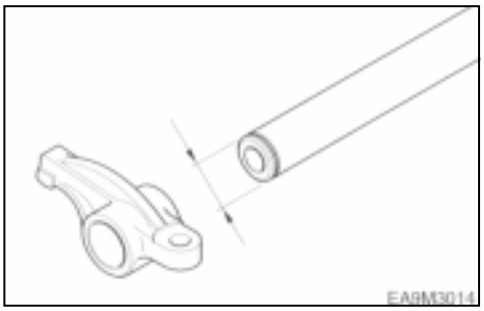

Standard	Limit
ϕ23.978 ~ ϕ23.959 mm	ϕ23.75 mm

2) Rocker arm

- **Visual check**

Visually check the face of the rocker arm in contact with the valve stem end for scores and step wear. If the wear is small, correct it with an oil stone or grinding paper of fine grain size. Rocker arm with a considerable amount of step wear should be replaced.

- **Rocker arm bushing diameter**

Measure the inside diameter of the rocker arm bushing with an inside micrometer or vernier calipers, and compare the measured values with the rocker arm shaft diameter. If the clearance exceeds the limit, replace either bushing or shaft, whichever worn more.

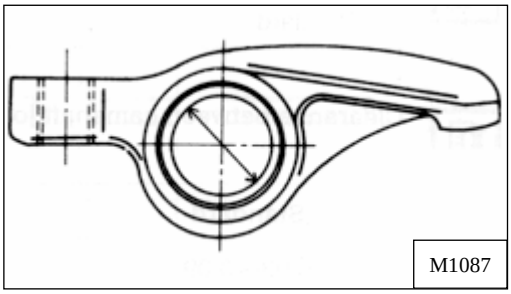

Standard	Limit
0.020 ~ 0.093 mm	0.3 mm or less

https://truckmanualshub.com/

3) Tappet and push rod

- **Clearance**

Measure the clearance of the tappet and tappet holes of the cylinder block. If the value is beyond the specified limit, replace tappets.

Standard	Limit
0.035 ~ 0.077 mm	0.15 mm

- **Visual check of tappet**

Visually check the face of the tappets in contact with the cam for pitting, scores or cracks, and replace if severely damaged. If the amount of cracks or pitting is small, correct with an oil stone or grinding paper.

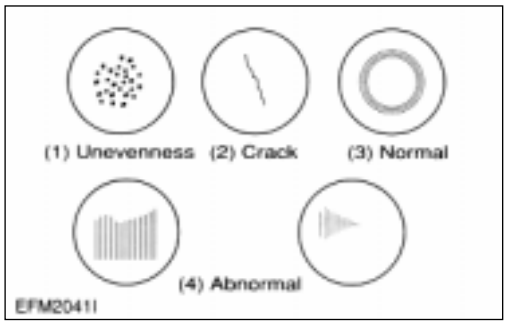

- **Outside diameter of tappet**

With an outside micrometer, measure the tappet outside diameter If the measured value is beyond the limit, replace tappets.

Standard	ϕ19.944 ~ ϕ19.965 mm

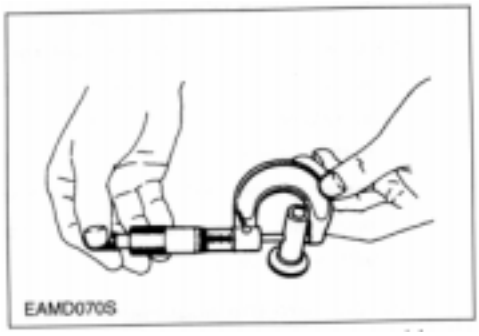

- **Push rod run-out**

Limit	0.3 mm or less

Use a feeler gauge to measure the push rod run-out.

Roll the push rod along a smooth flat surface as shown in the figure.

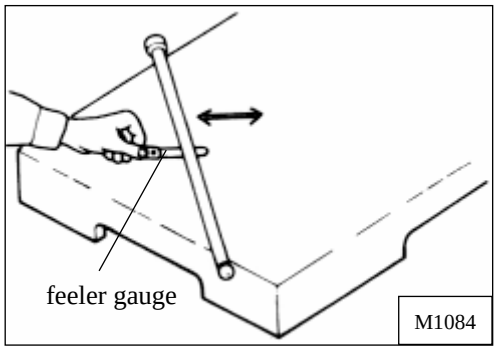

https://truckmanualshub.com/

4) Reassembling rocker arm assembly

Reassembling can be done in the reverse order of disassembling and following things should be heeded

- Check the oil supply hole of rocker arm shaft for any clog and clean thoroughly.
- Be careful not to occur any swap of position and reverse assembly.

3.2.4. Camshaft

(1) Camshaft end play

- Push the thrust plate toward the cam gear.
- With a feeler gauge, measure the clearance between the thrust plate and camshaft journal.
- If the end play is excessive, replace the thrust plate.

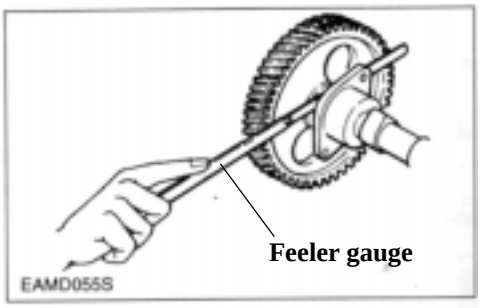

Standard	Limit
0.28 ~ 0.43 mm	0.6 mm

(2) Cam

- **Cam lobe height**

		Standard	Limit
Cam lobe height (C)	Intake	49.15 mm	48.85 mm
	Exhaust	D1146/TI : 49.32mm	49.00 mm
		DE08TIS : 49.35mm	
Cam journal diameter (A,B)		ϕ57.86 ~ ϕ57.88 mm	ϕ57.52 mm

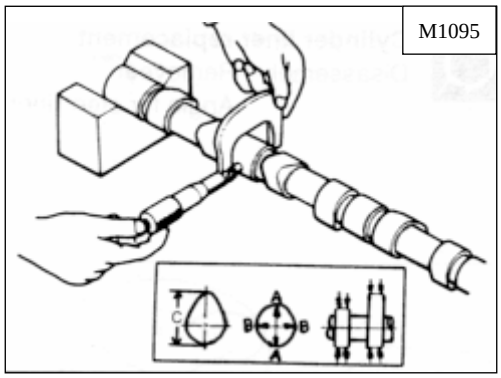

Use a micrometer to measure the cam lobe height and journal diameter.

If the measured number is less than the specified limit, the camshaft must replaced.

- **Cam surface**

https://truckmanualshub.com/

Inspect the cam face for scratch or damage.

Slight step wear or damage on the cam face may be corrected with oil stone or oiled grinding paper. But, replace if severely damaged.

(3) Cam shaft

- **Clearance**

between camshaft journal and camshaft bush

- With an outside micrometer, measure the camshaft journal diameter.
- Measure the inside diameter of the camshaft bushing on the cylinder block using a cylinder bore indicator, and compare the measured value with the camshaft outside diameter to determine the clearance.

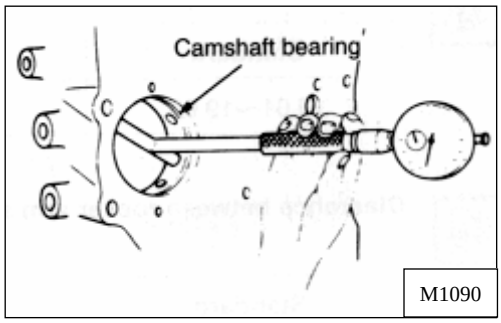

<Clearance>

Standard	Limit
0.12 ~ 0.17 mm	0.24 mm

Replace the bushing if the measured value is beyond the specified limit.

- **Run-out**

Support the camshaft on two V blocks and check for run-out using a dial indicator. Correct or replace the cam shaft if the amount of run-out is beyond the value indicating need for servicing.

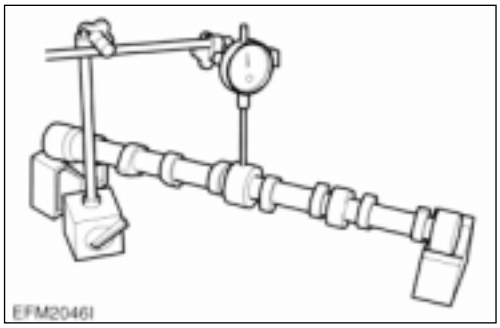

Standard	Limit

https://truckmanualshub.com/

0.05 mm	0.2 mm

3.2.5. Crankshaft

(1) Inspection of crankshaft

1) Defect check

- By naked eyes, check for any scratch or damage on the crankshaft journal and crank pin.
- By means of magnetic particle test and color check, check the crankshaft for any crack and if found, replace it.

2) Wear measuring

- With an outside micrometer measure the diameter of the crankshaft journals and pins in the directions as shown, and compare the measured values to determine the amount of wear.

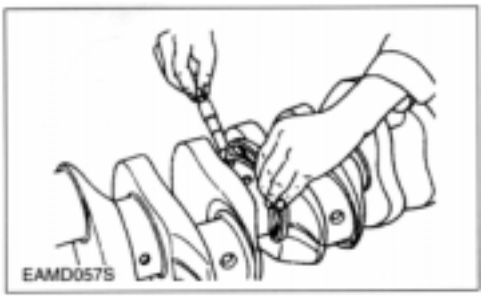

- If the amount of wear is beyond the limit, have the crankshaft ground and install undersize bearings. However, if the amount of wear is within the limit, you can correct the wear using an oil stone or oiled grinding paper of fine grain size. (Be sure to use grinding paper which has been immersed in oil.)

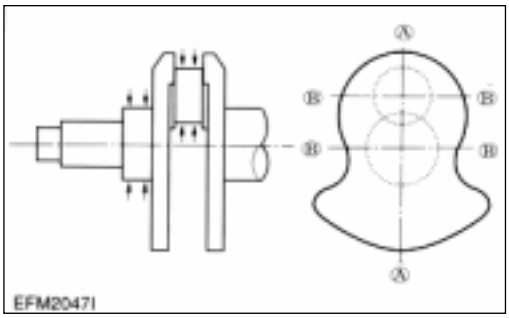

	Standard	Limit
Journal diameter	ϕ83.966 ~ ϕ83.988 mm	ϕ83.000 mm
Pin diameter	ϕ70.971 ~ ϕ70.990 mm	ϕ70.000 mm

https://truckmanualshub.com/

- In case that pin's wear is more than the limit value, grind the crankshaft journal and crank pin, and use the undersized bearings.

Be sure to use grinding paper which has been immersed in oil.

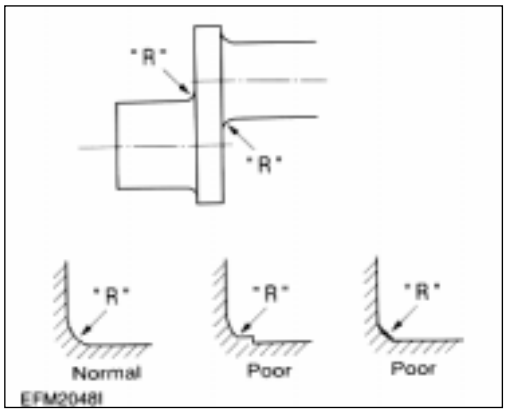

"R" part's specified value

① Crank pin's "R" : 4.5 $^{0}_{-0.2}$

② Crank Journal "R" : 4 $^{0}_{-0.2}$

<Undersize bearings available>

- **Standard**
- **0.25 (Inside diameter is 0.25 mm lesser than the standard size.)**
- **0.50 (Inside diameter is 0.50 mm lesser than the standard size.)**
- **0.75 (Inside diameter is 0.75 mm lesser than the standard size.)**
- **1.00 (Inside diameter is 1.00 mm lesser than the standard size.)**

Undersize bearings are available in 4 different sizes as indicated above, and the crankshaft can be reused through the regrinding as described above.

CAUTION :

In case of regrinding, the grinding the "R" part of bearing end should be correctly done and keep in mind to remove any jaws or coarse surface absolutely.

3) Crankshaft run-out

- Support the crankshaft on V blocks.
- Turn the crankshaft with a dial indicator placed on the surface plate and take the amount of crankshaft run-out.

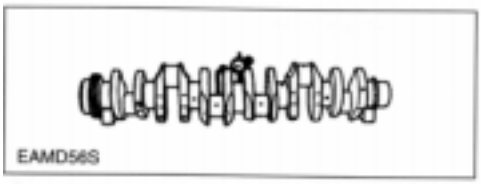

Standard	Limit
0.05 mm	0.1 mm

https://truckmanualshub.com/

(2) Crankshaft bearing and connecting rod

1) Visual check

Visually check the crankshaft bearing and connecting rod bearing for scores, uneven wear or damage.

2) Oil clearance between crankshaft and bearing (Method 1 : dial gauge)

- **Main bearing clearance**

Install the main bearing in the cylinder block, tighten the bearing cap to specified torque, then measure the inside diameter.

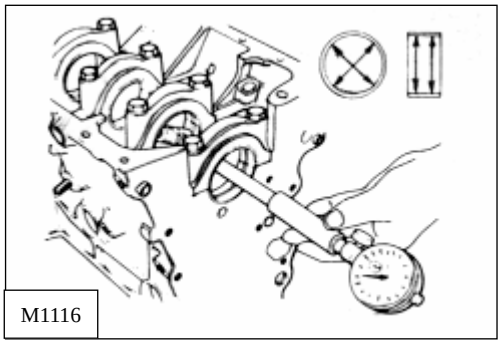
M1116

Torque	30 kg.m

Compare the two values obtained through measurement of main bearing inside diameter with the outside diameters of crankshaft journals to determine the oil clearance.

<Main bearing oil clearance>

Standard	Limit
0.052 ~ 0.122 mm	0.25 mm

- **Connecting rod bearing clearance**

Install the connecting rod bearing in the connecting rod bearing cap, tighten the connecting rod cap bolts to the specified torque, then measure the inside diameter.

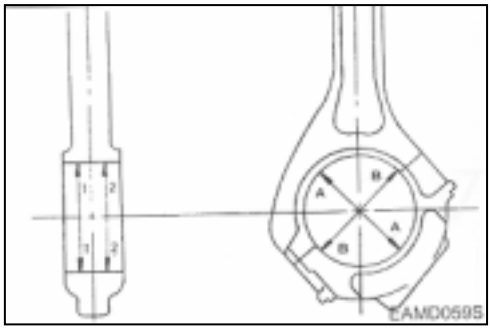

Torque	18 kg.m

https://truckmanualshub.com/

Compare the two values obtained through measurement of connecting rod bearing inside diameter with the outside diameters of crankshaft pins to determine the oil clearance.

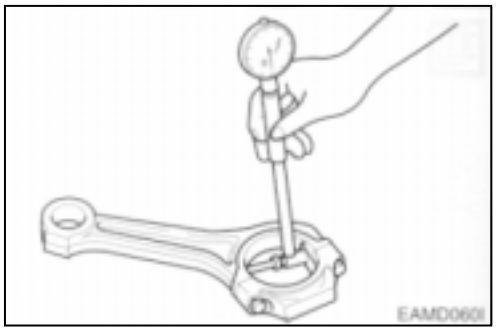

Standard	Limit
0.034 ~ 0.098 mm	0.25 mm

- If the clearance deviates from the specified range, have the crankshaft journals and pins ground and install undersize bearings.

3) Oil clearance between crankshaft and bearing (Method 2 : plastic gauge)

- Assemble the crankshaft on the cylinder block and put plastic gauge on the journal and pin of crankshaft and then after assembling bearing cap, tighten the bolts at the specific torque. Again after disassembling the bearing cap by removing the bolts, take out the flatted plastic gauge and measure the width of plastic gauge by means of plastic gauge measuring scale. This is the oil clearance.

- The oil clearance too can be measured in the same manner

https://truckmanualshub.com/

4) Bearing spread and crush

- **Inspection**

Check to see that the bearing requires a considerable amount of finger pressure at reassembly operation.

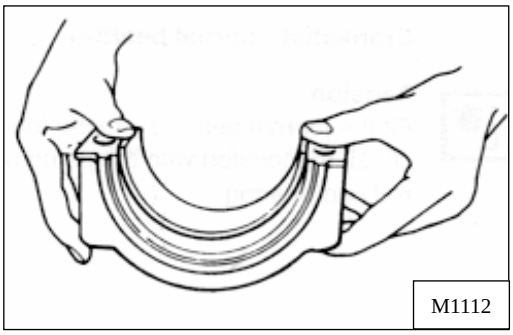

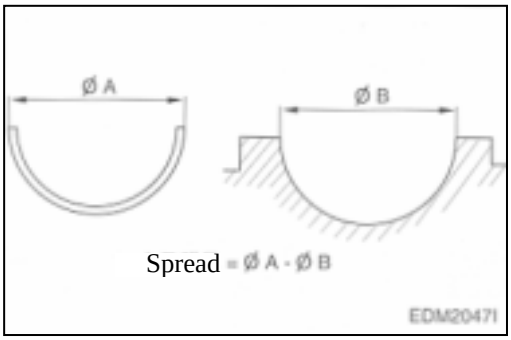

- **Crankshaft bearing crush**

Install the bearing and cap in the cylinder block, retighten the bolts to specified torque, unscrew out one bolt completely, then measure the clearance between the bearing cap and cylinder block using a feeler gauge.

Standard	**0.19 ~ 0.22 mm**

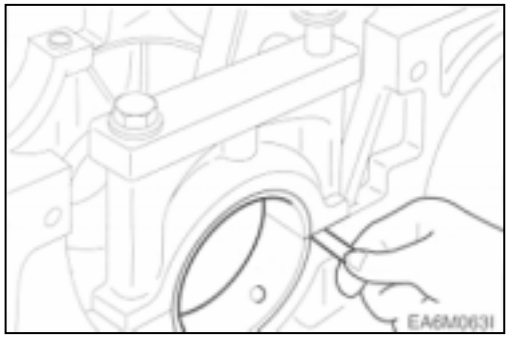

- **Connecting rod bearing crush**

Install the bearing and cap in the connecting rod big end, retighten the bolts to specified torque, unscrew out one bolt completely, then measure the clearance between the bearing cap and connecting rod big end using a feeler gauge.

Standard	**0.3 ~ 0.5 mm**

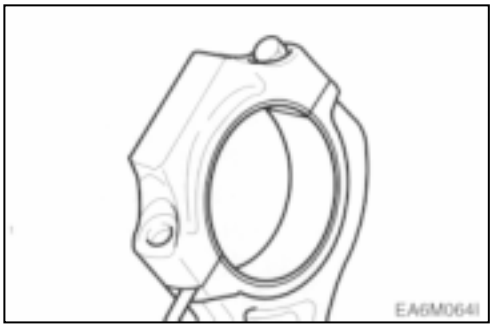

https://truckmanualshub.com/

5) Crank shaft end play

- Assemble the crankshaft to the cylinder block.
- With a dial gauge, measure crankshaft end play.

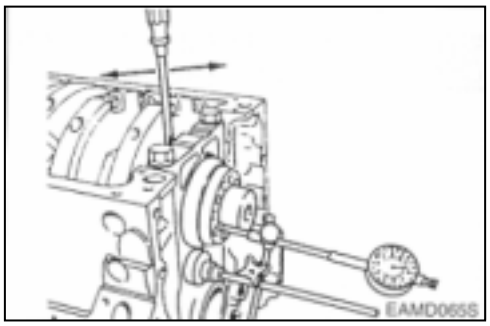

Standard	Limit
0.15 ~ 0.325 mm	0.5 mm

3.2.6. Piston assembly

(1) Disassemby of piston assembly

Disassemble piston according to the disassembly process.

(2) Piston inspection

1) Visual check

Visually check the pistons for cracks, scuff or wear, paying particular attention to the ring groove.

2) Clearance between the piston and cylinder liner

- With an outside micrometer, measure the piston outside diameter at a point 13mm away from the lower end of piston skirt in a direction at a right angle to the piston pin hole.

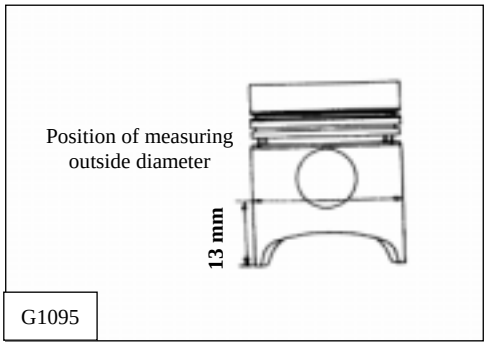

Standard	ϕ110.883 ~ ϕ110.897 mm

- Using a cylinder bore gauge, measure cylinder liner inside diameter at 3 points (cylinder top ring contacting face, middle, and oil ring contacting face on BDC) in a direction at an angle of 45°. Take the mean value with the largest and smallest values excepted.

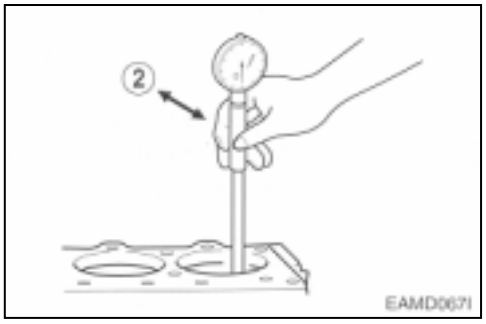

https://truckmanualshub.com/

Standard	Limit
ϕ111 ~ ϕ111.022 mm	ϕ111.122 mm

- The clearance is computed by subtracting the piston outside diameter from the cylinder liner inside diameter. Replace either piston or cylinder liner, whichever damaged more, if the clearance is beyond the specified limit.

Clearance between piston and liner

Standard	0.103 ~ 0.139 mm

(3) Piston rings

1) Visual check

Replace the piston rings with new ones if detected worn or broken when the engine is overhauled.

2) Piston ring gap

- Insert the piston ring into the upper portion of the cylinder liner bore so that it is held at a right angle to the cylinder liner wall.
- Measure the piston ring gap with a feeler gauge.

	Standard	Limit
Top ring	0.40 ~ 0.60 mm	1.5 mm
2nd ring	0.40 ~ 0.60 mm	1.5 mm
Oil ring	0.30 ~ 0.50 mm	1.5 mm

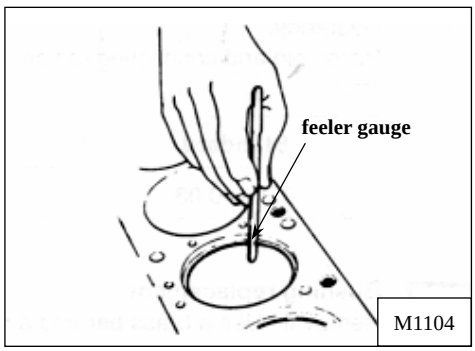

- Replace piston rings with new ones if the gap is beyond the limit

https://truckmanualshub.com/

3) Piston ring side clearance

- Fit the compression ring and oil ring in the piston ring groove.
- With a feeler gauge, measure side clearance of each ring, and replace either the ring or piston if the measured value is beyond the specified limit.

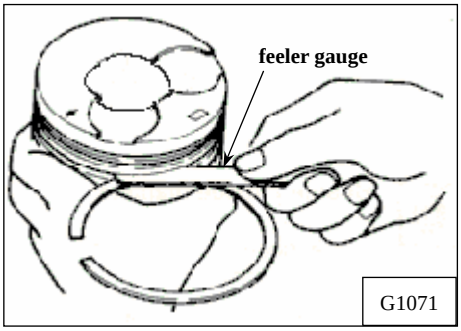

	Standard	Limit
Top ring	-	-
2nd ring	0.07 ~ 0.102 mm	0.15 mm
Oil ring	0.05 ~ 0.085 mm	0.15 mm

4) Piston ring tension

With a tension tester, measure piston ring tension. Replace the piston ring if the measured value is beyond the limit.

	Standard
Top ring	2.58 ~ 3.88 kg
2nd ring	1.81 ~ 2.71 kg
Oil ring	3.57 ~ 5.03 kg

(4) Piston pin inspection

1) Wear

Measure the amount of wear on the piston pin at the points as shown. The measured values are beyond the limit (0.08 mm or greater), replace the pin.

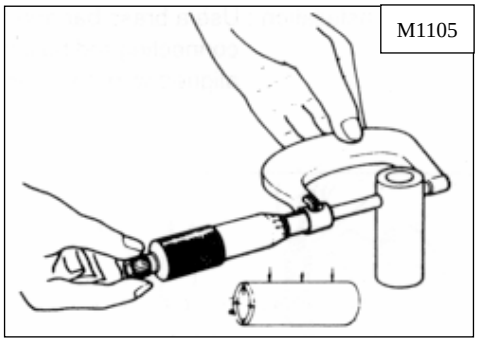

Standard	Limit
ϕ41.994 ~ ϕ 42.000 mm	ϕ 41.94 mm

https://truckmanualshub.com/

2) Clearance

Measure the clearance between the piston pin and connecting rod bushing, and replace either of them, whichever damaged more, if the measured value is beyond the limit.

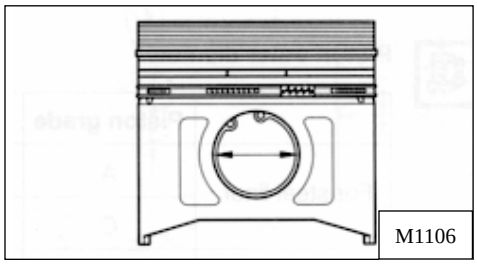
M1106

Standard	Limit
0.003 ~ 0.015 mm	0.08 mm

3) Condition check

Check the engaged condition of the piston and piston pin. If it is possible to force the pin into the piston heated with piston heater, the piston is normal. When replacing the piston, be sure to replace the piston pin together.

(5) Connecting rod inspection

1) Distorsion

Check the connecting rod for distortion. As shown in the figure below, install the connecting rod to the connecting rod tester, and check for distortion using a feeler gauge. If the connecting rod is found distorted, never re-use it but replace with a new one.

2) Holes alignment (parallelism)

Measure the alignment of the connecting rod piston pin bushing holes with connecting rod big end holes. At this time also, use both connecting rod tester and feeler gauge.

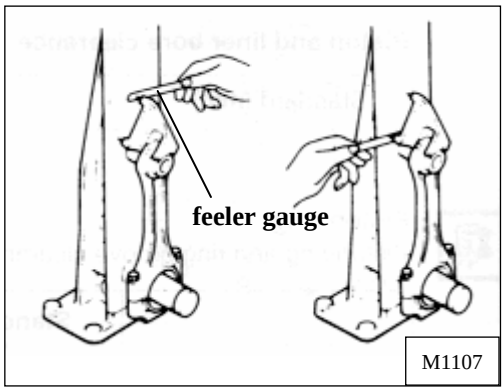

M1107

Standard	Limit
0.05 mm	0.1 mm or less

https://truckmanualshub.com/

3) Wear

- Assemble the connecting rod to the crankshaft and measure connecting rod big end side clearance using a feeler gauge.
- Assemble the connecting rod to the piston and measure connecting rod small end side clearance.
- If the measured values are beyond the limit, replace the connecting rod.

Limit	0.5 mm

3.2.7. Fuel injection nozzle projection (DE08TIS)

- Insert a seal ring on the cylinder head and assemble the injection nozzle
- Measure the clearance between the cylinder head bottom and nozzle tip. If the measured values are beyond the limit, replace the seal ring.

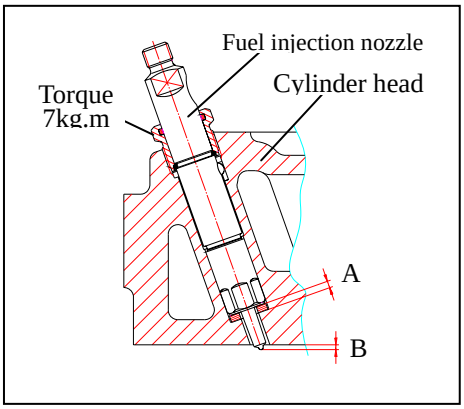

	Standard
A (Thickness of seal ring)	3.5±0.1 mm
B (Projection of nozzle)	2.43~2.80 mm

https://truckmanualshub.com/

3.3. Reassembly

3.3.1. General precautions

- Clean all the disassembled parts, particularly oil and water ports, using compressed air, then check that they are free from restrictions.
- Arrange the general and special tools in order for engine assembly operation.
- To wet each sliding part, prepare the clean engine oil.
- Prepare service materials such as sealant, gaskets, etc.
- Discard used gaskets, seal rings, and consumable parts, and replace with new ones.
- Apply only the specified torque for bolts in the specified tightening order and avoid over-tightening.
- Be sure to check that all the engine parts operate smoothly after being reassembled.
- Check the bolts for looseness after reassembly.
- After completing the engine reassembly operation, check if there is missing parts or shortage of parts.
- Keep your hands clean during the working.

3.3.2. Cylinder block

Cover the floor of the workshop with wood plate or thick paper to prevent damage to the cylinder head and place the cylinder block with the head fitting surface facing downward.

3.3.3. Oil spray nozzle (D1146TI, DE08TIS)

Tighten and assemble the oil spray nozzle flange with fixing bolts using the spray nozzle jig.

Torque	7 kg.m

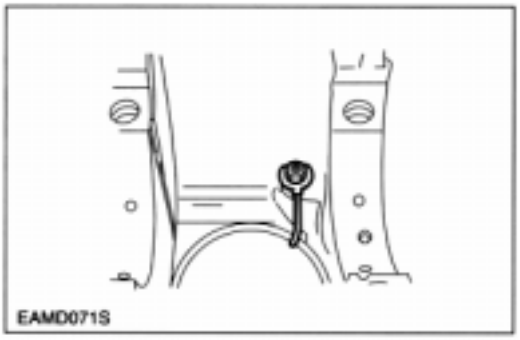

https://truckmanualshub.com/

3.3.4. Tappet and cam shaft

- Undercool a new bush with dry ice for about 2 hours and press it into position in the cylinder block using a bench press. After the pressing operation, measure the inside diameter of the cam bush to check if it is not deformed.

- Apply engine oil to the entire face of the tappets and slide them into the tappet holes on the cylinder block.

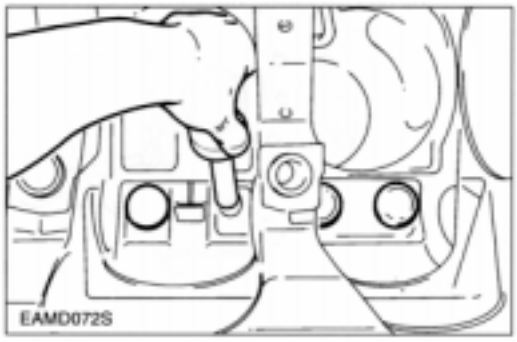

- Wet the cam bush inside diameter and camshaft with oil, and carefully assemble them while turning the camshaft.

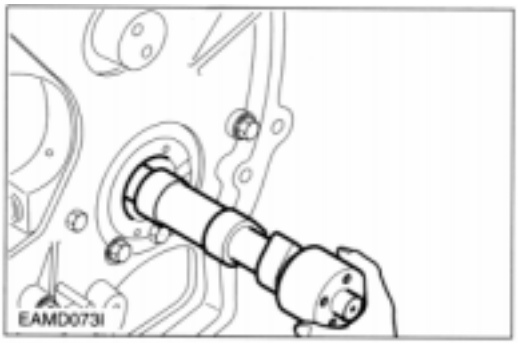

CAUTION :
Be careful not to generate a damage to camshaft and bush.

- Check to see that the camshaft rotates smoothly.

https://truckmanualshub.com/

3.3.5. Crankshaft

- Install the main bearing (refer to assemble sequence : right figure) machined with two holes in the cylinder block so that the key is aligned with the key groove, then apply oil to the bearing surface.

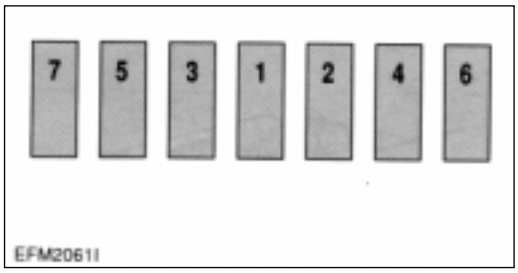

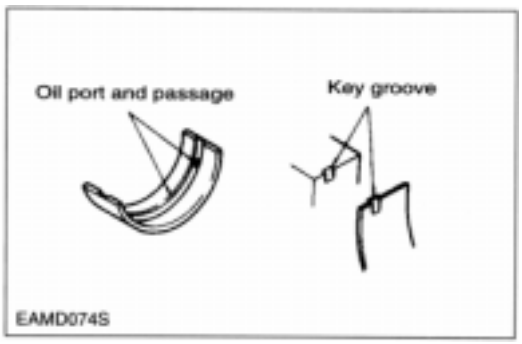

- Heat the crankshaft gear for at least 10 minutes to 120°C, then apply sealant (Loctite # 641) to the inside wall of the heated crankshaft gear evenly before inserting it to the end of crankshaft.

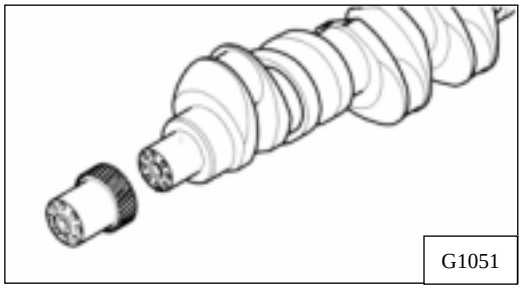

- Semi-tighten a bolt at both sides of the crankshaft, apply engine oil to journals and pins, then assemble the crankshaft with the cylinder block by tightening the fixing bolts.

CAUTION :
Coat engine oil to the pin and journal of crankshaft.

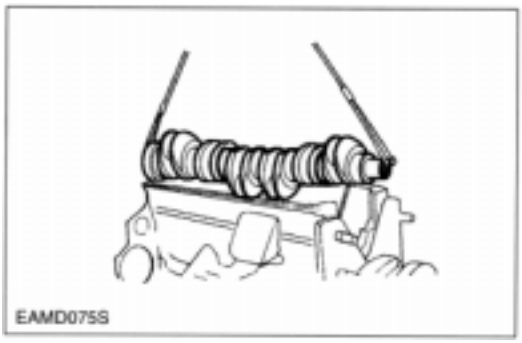

- Install the oiled thrust washers with the oil groove facing outward.

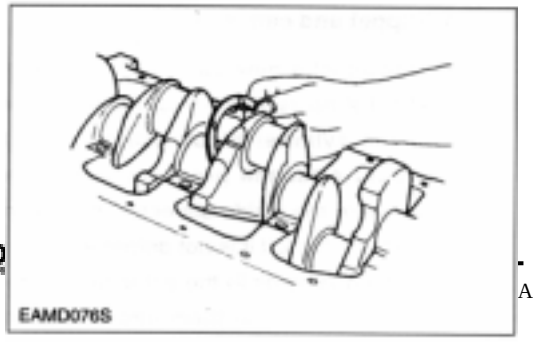

https://truckmanualshub.com/

- Install the bearing and thrust washers to the bearing cap and apply oil to the bearing and thrust washers.

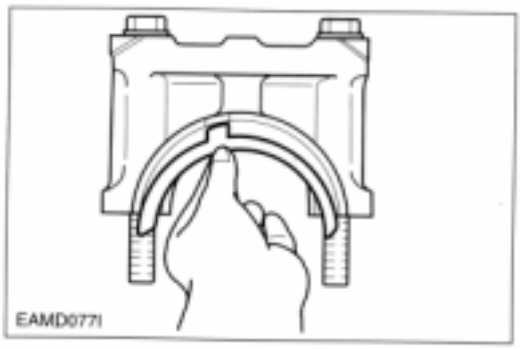

- Install the bearing cap by matching the cylinder block No. with the bearing cap No.

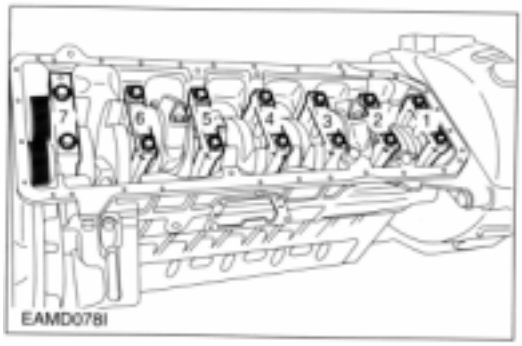

- Apply oil to the entire part of the bearing cap bolts, then tighten in tightening sequence to specified torque.

Torque	30 kg.m

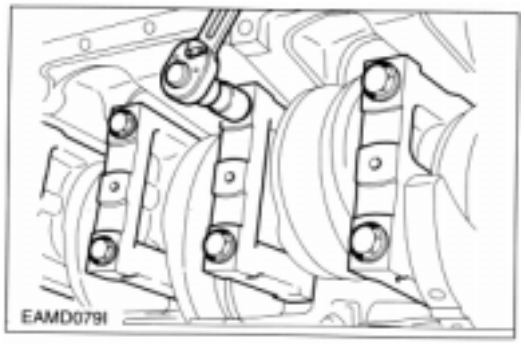

- After semi-tightening both bolts evenly, tighten them diagonally to the specified torque using a torque wrench as follows.

<Tightening Order>

(1) First stage : Coat the cap bolts with engine oil

(2) Second stage : Temporary bolt screwing about 1 2 threads

(3) Third stage : With impact wrench, tighten up to about 15 kg.m

(4) Fourth stage : With torque wrench, tighten up to about 25 kg.m

(5) Fifth stage : By means of torque wrench, tighten finally in the specified

https://truckmanualshub.com/

torque. (30 kg.m).

- Tighten the bearing cap in the sequence of **4–3–5–2–6–1-7**.
- Check to see that the assembled crankshaft turns smoothly with hand.

3.3.6. Flywheel housing

- Temporarily install the guide bar on the cylinder block.
- Apply gasket to the cylinder block.
- Using the dowel pin and guide bar, install the flywheel housing and tighten the fixing bolts in a diagonal sequence to specified torque. (Zigzag method)

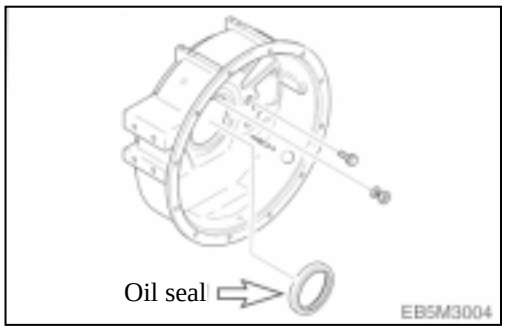

Torque	8 kg.m

CAUTION :
When the bolts are tightened, remove the guide bar.

- The flywheel housing is assembled after the new oil seal was pressed (Coat engine oil over the outside of oil seal) before in the housing by a press.
- If any peripheral scar was generated due to oil seal at the oil seal contact surface of crankshaft, after inserting about 1 mm shim or thereabout in front of oil seal (Direction toward crankshaft.), measure and adjust.

3.3.7. Oil seal (Rear side)

- Apply lubricating oil to the outside of the oil seal and flywheel housing inside diameter and fit them over the crank

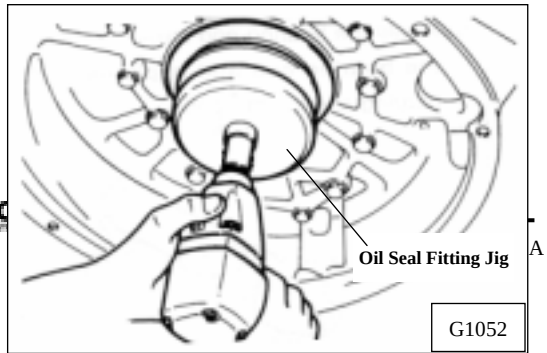

https://truckmanualshub.com/

shaft, then assemble the oil seal using an oil seal fitting jig.

3.3.8. Flywheel

- Installation of flywheel ring gear
  With a gas burner, heat the ring gear evenly until heat expansion takes place, then install it using a hammer.

CAUTION :
Do not allow the temperature of the ring gear to exceed 200 °C (390 °F).

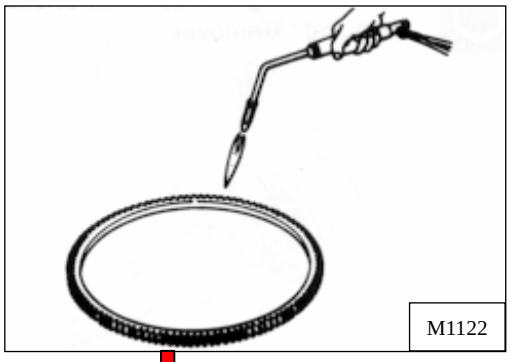

- By means of mandrel, assemble pilot bearing to the flywheel.
- By means of mandrel, press in the wear ring at the backward face.

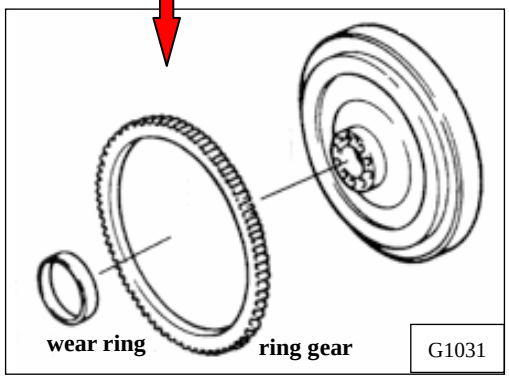

- Install a guide bar into a bolt hole on the crank shaft, and lift the flywheel to align the dowel pin with the pin hole on the flywheel for temporary assembly operation.
- Coat the adhesive (#271 Loctite) over the assembling bolts and install bolts in the remaining holes. After that take out the guide bar, then install a bolt in the hole where the guide bar had been inserted.
- According to the order of tightening tighten the fixing bolts using a torque wrench in a diagonal sequence to

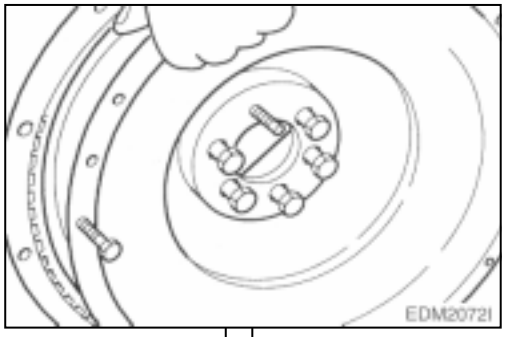

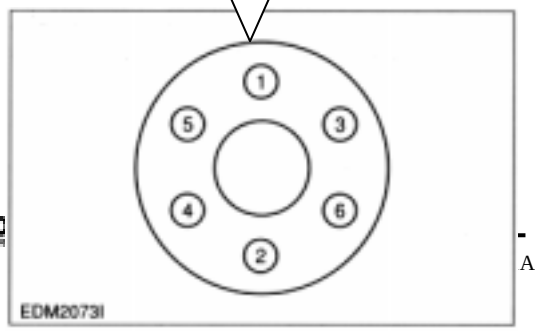

https://truckmanualshub.com/

specified torque.

Torque	18 kg.m

3.3.9. Magnetic pick-up sensor

- Move the lock nut to hexagonal side of sensor completely.
- Rotate (Clockwise) the pick-up sensor on fly wheel housing, until the end of it reach on fly wheel ring gear.
- Then rotate (Counter clockwise) the pick-up sensor for 270° (gap 1.0 mm) and fix lock nut.
- Tolerance limit is 27°. (gap ± 0.1 mm)

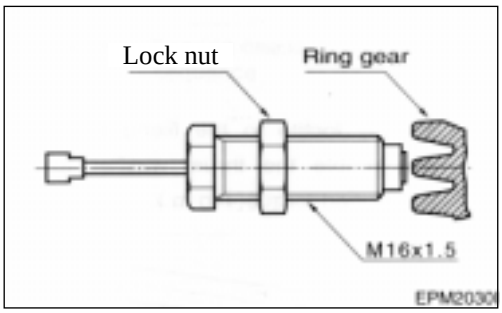

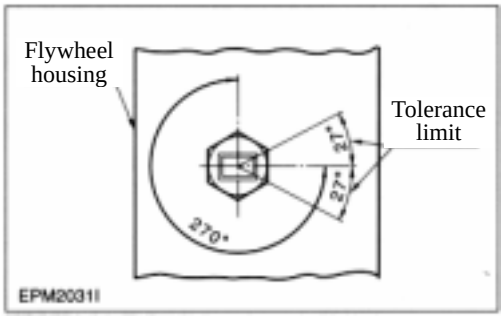

3.3.10. Water chamber cover

- Coat the adhesive over the water chamber cover (Particular around bolt holes) and after attaching the gasket, assemble it to the cylinder block using the bolts for assembling.
- As for tightening of bolts, after primarily tightening the bolts located at the both ends of cover (4ea at both sides) and middle bolts (Upper, lower 2ea) , tighten the rest.

3.3.11. Cylinder liner

- Stand the cylinder block so that the flywheel faces downward.
- Thoroughly clean the liner flange fitting surface and bore inside with

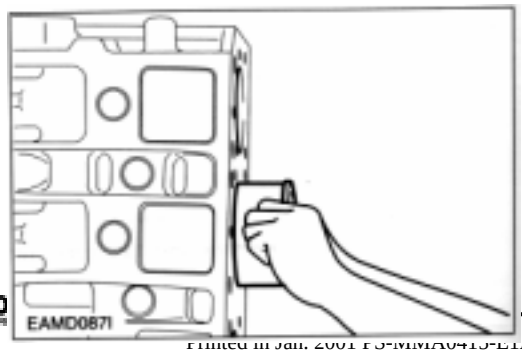

https://truckmanualshub.com/

compressed air to prevent the entry of foreign substances.

- After the cleaning operation, make the cylinder liner dried up and push it into the cylinder block by hand.

- Wet the liner inside diameter with engine oil.

3.3.12. Piston and connecting rod

- Use a piston heater to heat the piston approximately 100 °C (212 °F) for 5 minutes.

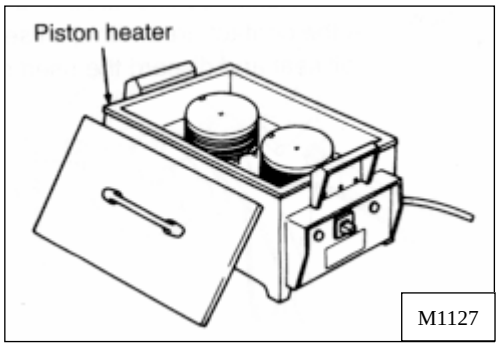

- Align the piston pin hole with the oiled connecting rod small end and press the piston pin (by lightly tapping with a rubber hammer) to assemble the connecting rod with the piston.

- Nothing the direction of the piston,

make the longer side(machined with key groove on the bearing) of the connecting rod big end.

- On the piston head surface, the longer

side connecting rod big end is in opposite direction from the valve seating surface as well as in the same direction with the narrow margin of the combustion chamber.

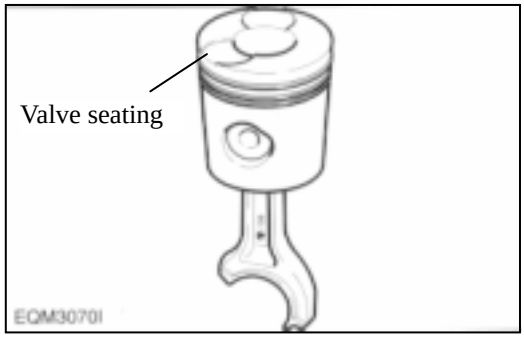

https://truckmanualshub.com/

- Install the snap rings and check to see that it is securely assembled.

- Install the piston ring in the piston using piston ring pliers.

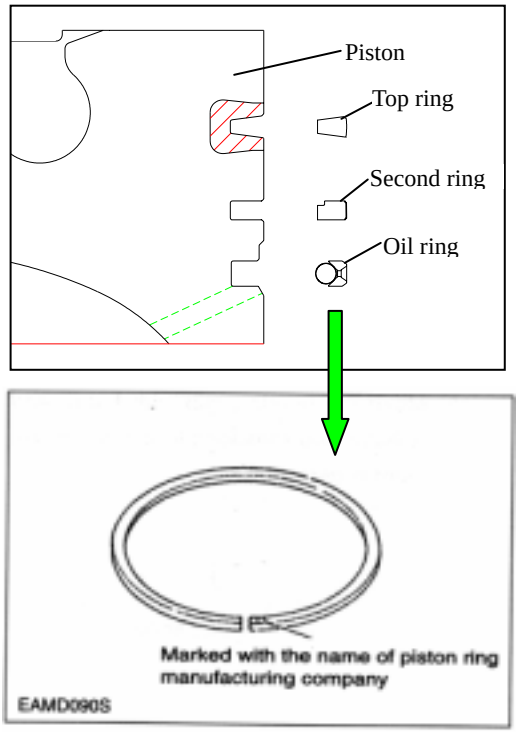

- Identify the mark "**Y**" or "**TOP**" on the ring end to prevent the top and bottom of the piston ring from being interchanged and make the marked portion face upward.
  (The surface marked as "**Y**" is upper surface.)

- Adjust the angle among individual piston ring gaps to 90° and fit a piston assembling jig onto the piston, Use care not to match the ring gaps with the pin direction.

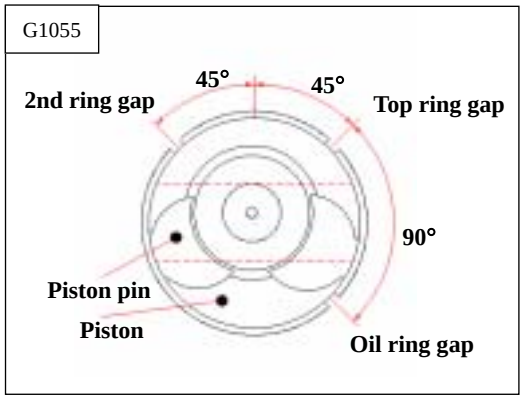

- Install the bearing by aligning it with the connecting rod key groove and apply oil to the bearing and piston.

- Position the valve seating surface toward the tappet hole and insert the piston with hand.

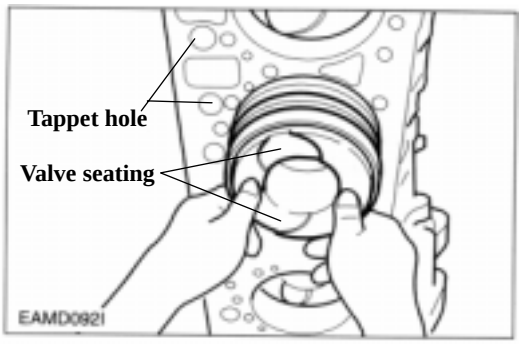

CAUTION :

https://truckmanualshub.com/

Use care not to damage the cylinder liner and piston, and slightly lift and insert the piston into the cylinder so that the ring may not be damaged by the fillet of the liner.

- Install the bearing in the connecting rod cap and apply oil.

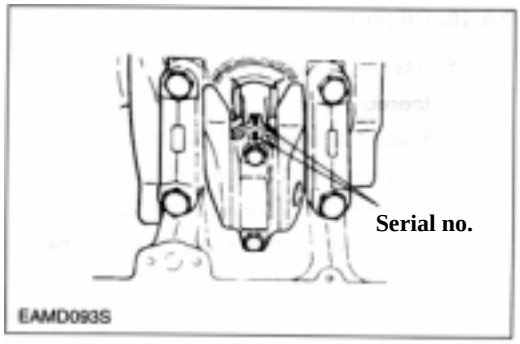

CAUTION :

Make sure that the manufacture serial numbers impressed on the connecting rod cap and connecting rod big end are identical, and install the connecting rod cap by aligning it with dowel pin.

- Wet the fixing bolts with engine oil, semi-tighten them with hand, tighten them to the specified torque using a torque wrench as follows.

<Tightening Order>

(1) First stage : Coat engine oil over bolts.
(2) Second stage : Temporary bolt screwing about 1 2 threads
(3) Third stage : With torque wrench, tighten up to about 10 kg.m
(4) Fourth stage : With torque wrench, tighten up to about 15 kg.m
(5) Fifth stage : By means of torque wrench, tighten finally in the specified torque. (18 kg.m).

Torque	18 kg.m

- When the connecting rod bearing cap bolts are tightened, check the connecting rod end play to the right and left with hand. If no end play is found,,

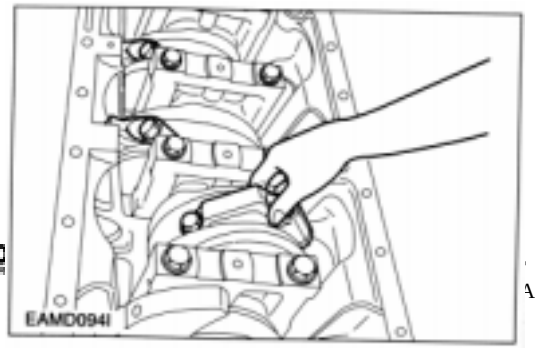

https://truckmanualshub.com/

remove and reinstall or replace the connecting rod bearing cap.

3.3.13. Timing gear case

- Mount a new gasket using dowel pin on the cylinder block.
- Put the time gear case to the cylinder block by aligning the dowel pin hole of timing gear case with its pin, and then assemble it by tapping lightly with an urethane hammer to the right and left (Particularly around dowel pin).
- Tighten the bolts for assembling to the specified torque.
  However, in case of tightening the bolts, tighten primarily the bolts of both end parts and then do the rest.

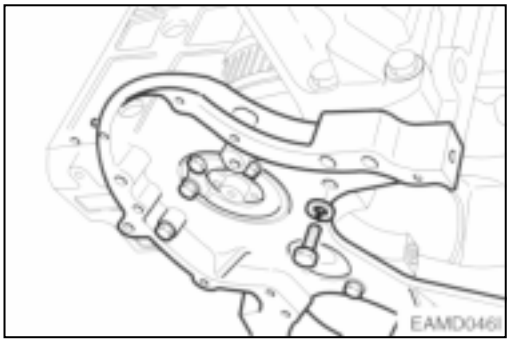

3.3.14. Timing gear and idle gear pin

- Install the oil pump idle gear onto the No.7 bearing cap.
- Install a thrust washer over the camshaft and assemble the cam gear by aligning it with camshaft dowel pin. Tighten the cam gear assembling bolts to the specified torque. (Zigzag method)

Torque	2.2 kg.m

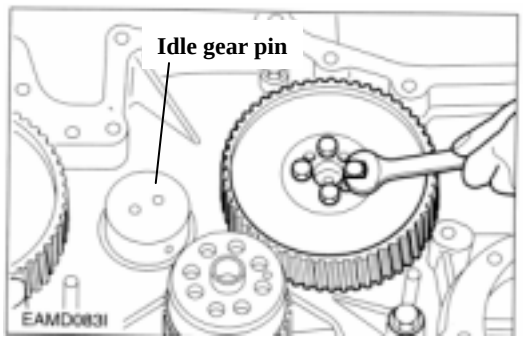

- With the oil port on the idle gear pin facing the cylinder block, install the idle gear pin.

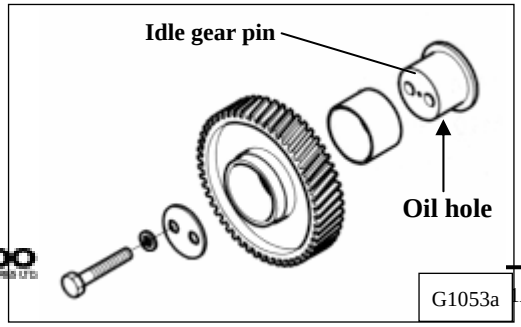

https://truckmanualshub.com/

- Idler gear pin with oil hole is assembled toward cylinder block.

- Install the idle gear by coinciding the marks impressed on the crank gear, cam gear, fuel injection pump drive gear, and idle gear.
- Install a thrust washer on the idle gear and tighten to specified torque.

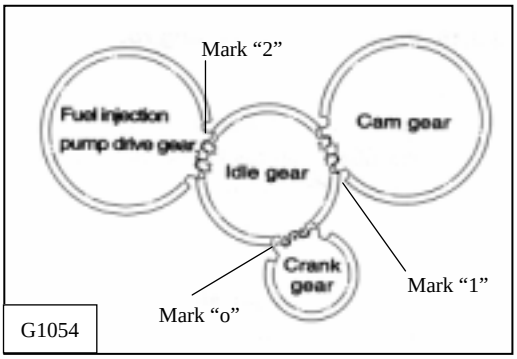

Torque	3.1 kg.m

- Check and adjust the amount of backlash between gears using a feeler gauge.

Measuring position (between)	Backlash	Limit
cam gear & idle gear	0.16 ~ 0.28 mm	0.35 mm
crank gear & idle gear	0.16 ~ 0.28 mm	0.35 mm
injection pump & idle gear	0.16 ~ 0.28 mm	0.35 mm

3.3.15. Injection pump flange

- After assembling the fuel injection pump gear to the idle gear, tighten the assembling bolts of the injection pump flange.
- Mount gasket by aligning the bolt holes with the pin holes on the bearing housing.

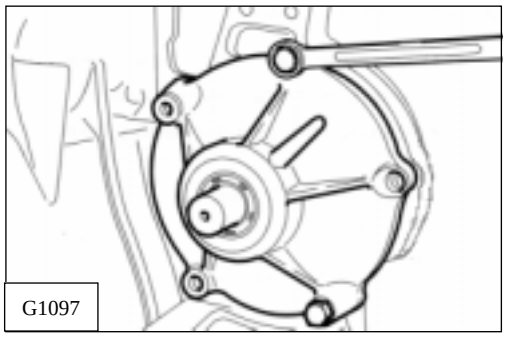

- Turning the flywheel, adjust the pointer to the position of the engraved scale.
- After adjusting the injection timing of fuel injection pump drive gear, tighten the

https://truckmanualshub.com/

fixing bolts in the direction of fuel injection pump.

3.3.16. Fuel injection pump

- Install the injection pump bracket in the cylinder block.
- After measuring the amount of run-out with an alignment setting jig, disassemble the bracket, adjust the shims, then reassemble it.

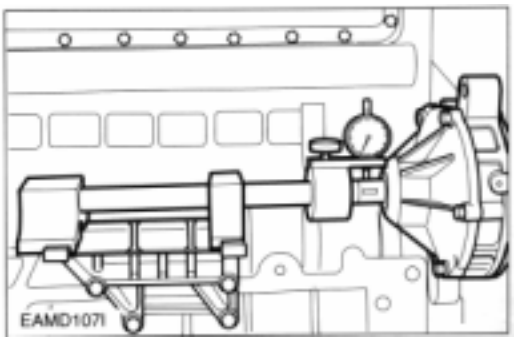

Run-out	0.2 mm or less

- Mount the top/bottom adjusting shims in the bracket and then mount the fuel injection pump.
- Tighten the fixing bolts in a diagonal sequence to specified torque.

Torque	4.4 kg.m

<Injection Timing Adjustment>

- Bring the piston of #1 cylinder to the compression TDC (OT) by turning the crankshaft. Again, turn 60° in the reverse direction of engine rotation.
- Disassemble the fuel injection pipe that connect the fuel injection pump and #1 injection nozzle.
- Disassemble the fuel injection pump delivery valve holder, and after removing the valve and valve spring, again assemble the valve holder and then, on it assemble the pipe of "U" shape on it.

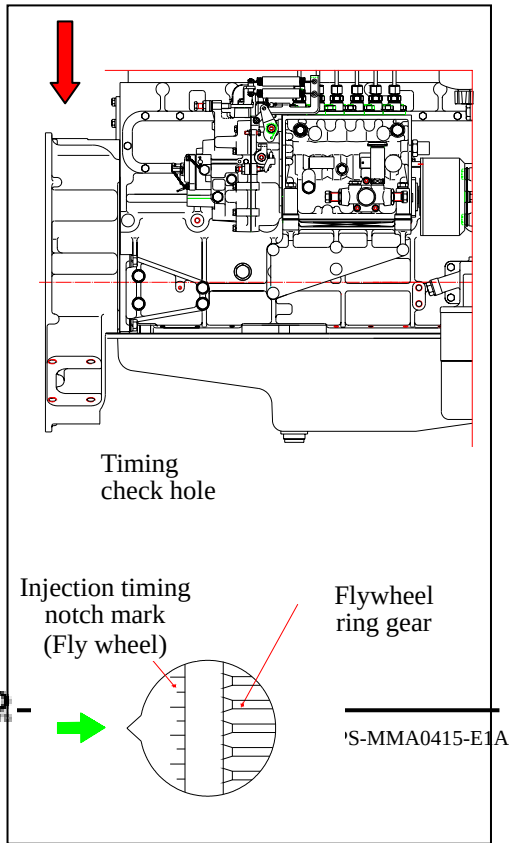

https://truckmanualshub.com/

- Operating the priming pump of supply pump, turn the crankshaft slowly in the direction of engine rotation until the fuel will drop at the rate of a drop for 6 8 sec.
- Confirm then whether the indication point at the flywheel housing inspection hole and the engraved specified injection angle are coincided or not, and if the injection timing is not correct, adjust as follows.

(1) As above adjusting method, Please coincide the indication point(↓) at the flywheel housing's inspection hole with the flywheel's inspection angle.

<Fuel injection timing>

Model	Timing angle
D1146	BTDC 15°
D1146TI	BTDC 9°
DE08TIS	BTDC 3°

(2) Loosen the drive gear fixing bolt of injection pump a bit.

(3) After turning slowly the coupling of injection pump until the fuel will drop from #1 plunger at the rate of a drop for 6 8 sec., tighten the driving gear fixing bolt of fuel pump.

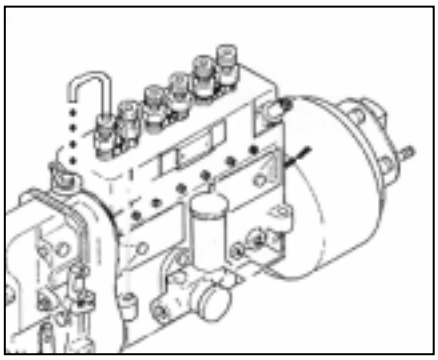

- After the adjustment of injection timing, disassemble the "U" shape pipe, the delivery valve and the valve spring.

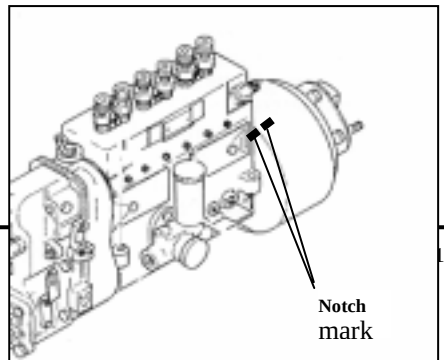

https://truckmanualshub.com/

- Turn the coupling until the notch mark of the indicator plate attached to the fuel injection pump is aligned with the notch mark of the coupling.

- Tighten the coupling fixing bolts and nuts to specified torque.

Torque	6.0 ~ 6.5 kg.m

- Install the oil delivery pipe and return pipe.

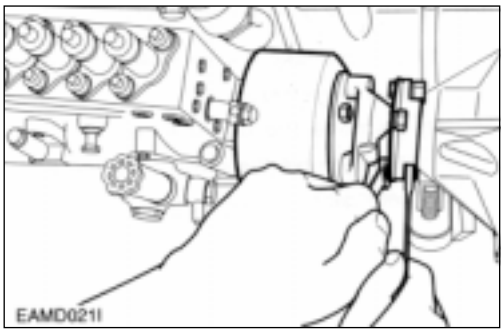

3.3.17. Oil pump and oil pipe

- Install a dowel pin in the No.7 bearing cap, then assemble the oil pump by tapping lightly with urethane hammer.
- Tighten the assembling bolts with specified torque.

Torque	4.4 kg.m

- Assemble the oil suction pipe with the delivery pipe to oil pump by the bolts.

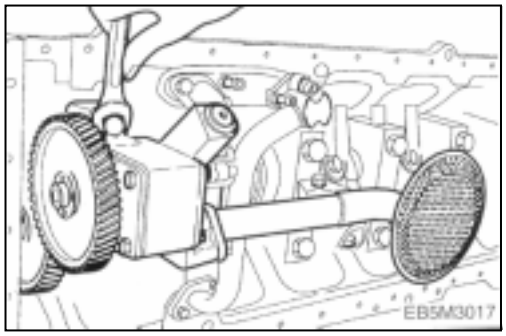

3.3.18. Timing gear case cover

- Install dowel pin on the timing gear case.
- Mount a gasket by aligning the fixing bolt holes with those on the gasket.
- Align the dowel pin with the cover pin hole, then install the cover with light tap.
- Tighten the fixing bolts beginning with

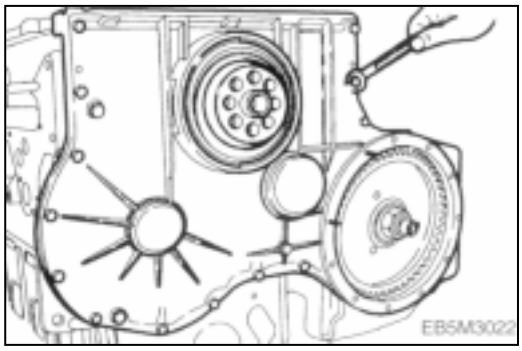

https://truckmanualshub.com/

the oil pan fitting face.

CAUTION :
In the assembling, be careful not to be damaged by the crankshaft.

3.3.19. Front oil seal

- Apply lubricating oil to the outside of the oil seal and the oil seal hole of the timing gear case cover.
- Put the new oil seal on the oil seal hole of timing gear case cover aligning the center of them, then assemble the oil seal using an oil seal fitting jig.

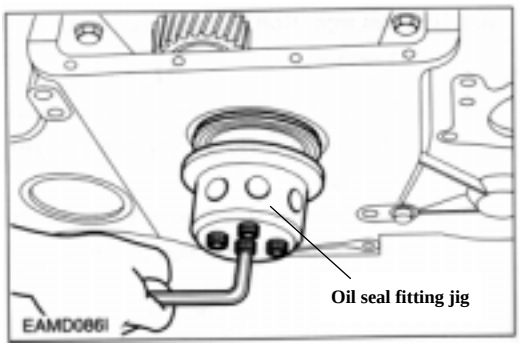

3.3.20. Water pump

- Mount a new gasket.
- Install the water pump on the cylinder block and tighten the assembling bolts with specified torque.

Torque	2.2 kg.m

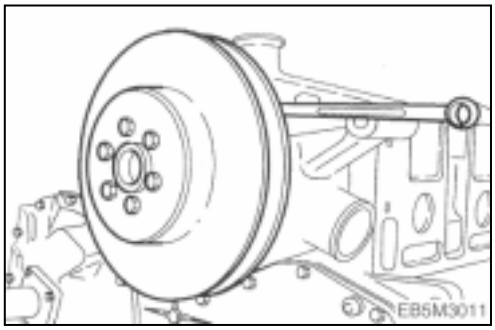

- Connect water pipes and by-pass pipe to the water pump.
- Connect a water pipe to the expansion tank.

3.3.21. Vibration damper

- Insert the vibration damper to the crankshaft, and assemble by tightening the assembling bolts at the specified tightening torque according to bolt tightening order. (refer to right figure.)

Torque	13 kg.m

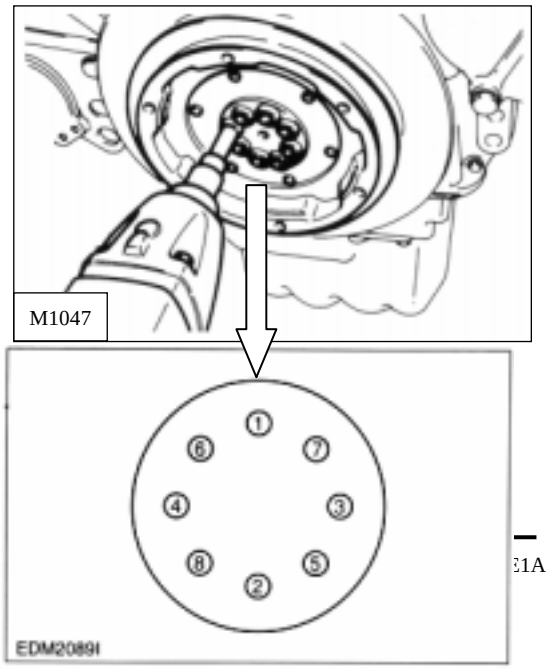

https://truckmanualshub.com/

3.3.22. Oil pan

- Remove the gaskets thoroughly that project at the timing gear case, case cover of cylinder block, and the contacting part of flywheel housing by means of a scraper.

CAUTION :
Be careful for the gasket pieces not fall into the engine during the work.

- Coat the silicone at the gasket part that was removed (Contacting part), and attach the new oil pan gasket.

- Assemble the oil pan by tightening the oil

pan assembling bolts, and when tightening bolts, primarily tighten the bolts (4ea) at the both ends, and then tighten the rest bolts to specified torque.

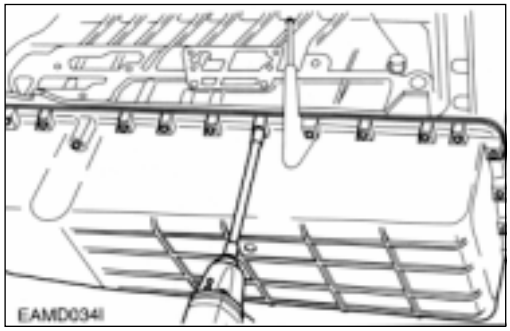

Torque	2.2 kg.m

CAUTION :
Align the bolt holes with gasket holes to prevent damage to the gasket and tighten.

3.3.23. Oil filter

- Install the oil filter onto the cylinder block, and tighten the fixing bolts.

https://truckmanualshub.com/

Torque	2.2 kg.m

- Apply engine oil to the oil filter cartridge o-ring and assemble the cartridge using a filter wrench.

3.3.24. Oil cooler

- Install the gasket on the cylinder block.
- Assemble the oil cooler by tightening the assembling bolts.

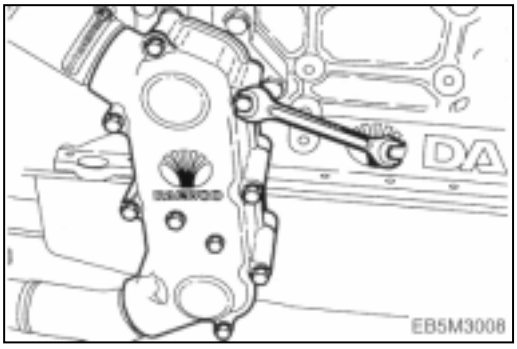

- Connect the cooling water pipe with the cooling water pump and tighten a hose clamp.

3.3.25. Starter

- Assemble the starter in position on the flywheel housing.

Torque	8.0 kg.m

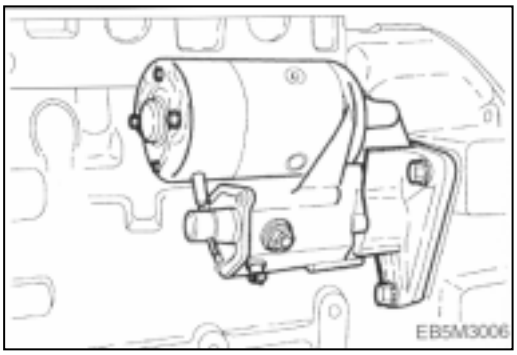

3.3.26. Intake and exhaust valves

- Identify the marks of "**IN**" and "**EX**" impressed on the valve head before assembling the valve with the valve head.

- With a valve stem seal fitting jig, assemble the valve stem seal on the

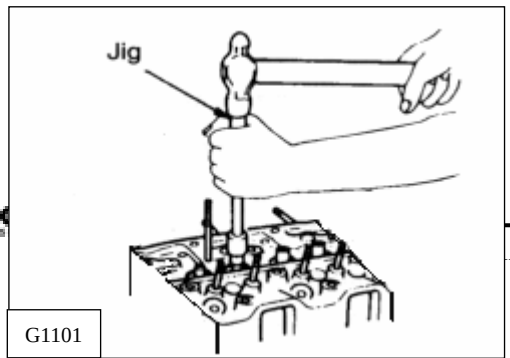

https://truckmanualshub.com/

valve guide.

- After installing valve springs and spring retainer, press the retainer with a jig, then install the cotter pin.
- Tap the valve stem lightly with a rubber hammer to check that the valve is assembled correctly.

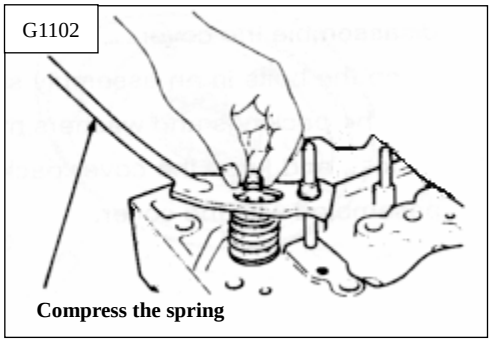

Compress the spring

3.3.27. Cylinder head

- Blow the bolt holes of cylinder block with a compressed air and remove the foreign matter.
- Clean the head gasket contact surface thoroughly.

CAUTION :
However, be careful for the foreign material not to enter into the combustion chamber.

- Assemble the new head gasket by aligning the holes with dowel pins of cylinder block with "**TOP**" mark facing upward.

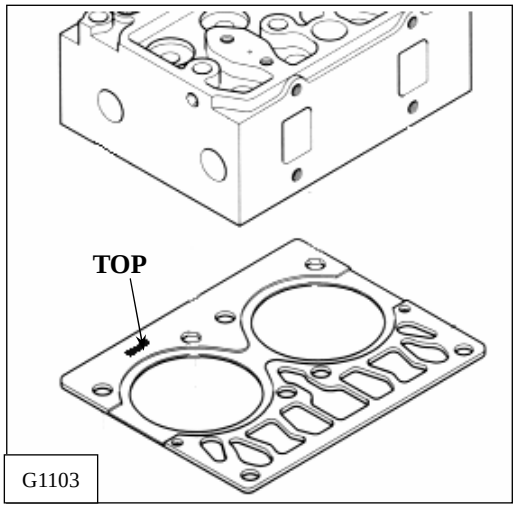

https://truckmanualshub.com/

- Check the inside of combustion chamber for foreign substances, and carefully mount the cylinder head assembly in the block by aligning the dowel pin with the dowel pin hole.

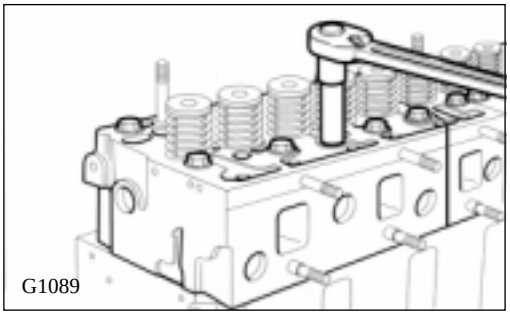

CAUTION :

Be careful not to damage the cylinder head gasket. If the dowel pin is not in alignment, lift the cylinder head again and then remount it.

CAUTION :

After tightening the cylinder head bolts, even at disassembling, the cylinder head gasket should be changed a new one.

- Coat the cylinder head bolts with engine oil, and tighten in proper sequence to the specified torque according to bolt tightening order. (refer to the figure).

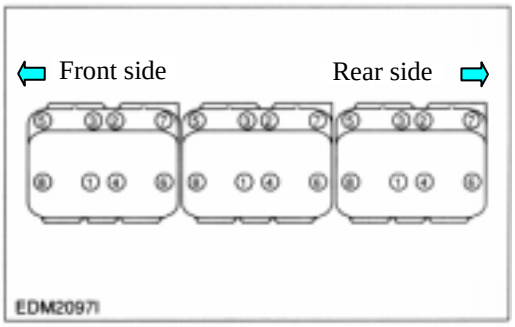

<Cylinder Head Bolts>

	Type 1	Type 2
Specification	TY 12.9T M14×1.5×146	TY 10.9T M14×1.5×146
Torque	24.5 kg.m	6 kg.m +180°+150° (Angle torque)

- However, before tightening bolts, the side parallel degree between cylinder heads should be adjusted.

<Tightening order of bolts by steps>

https://truckmanualshub.com/

(1) First stage : Coat the bolts with engine oil.
(2) Second stage : Tighten 1 2 threads with hands.
(3) Third stage : Tighten at about 6 kg.m with a wrench.
(4) Fourth stage : Tighten at rotating angle method 180° with a wrench.
(5) Fifth stage : Finally, tighten at rotating angle method 150° with a torque wrench .

However, all bolts are tightened simultaneously by above steps.

- Coat the push rod with engine oil and insert it into the push rod hole.

3.3.28. Rocker arm assembly

- Apply lubricating oil to the rocker arm bush and shaft, and assemble the intermediate bracket with the rocker arm (rocker arm assembly) on the cylinder block using fixing bolts. In tightening the bolts, it must be done at the specified value using zigzag method.

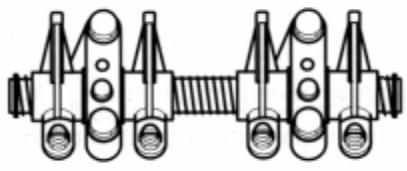
G1088

Torque	M10x1.5	4.4 kg.m
	M12x1.5	8.0 kg.m

- Semi-install valve clearance adjusting bolts onto the rocker arm.
- Install the spring, rocker arm, bracket, rocker arm, spring, washer, and snap ring in the described sequence.

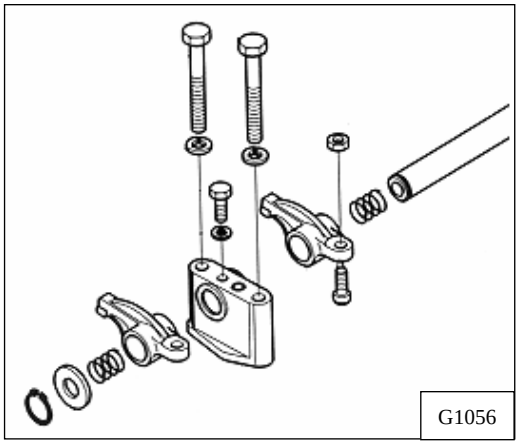
G1056

- Install the rocker arm and bracket in the same direction.

- Adjust the valve clearance as following guide.

https://truckmanualshub.com/

<Guide for valve clearance adjustment>

- By turning the crankshaft, when the intake and exhaust of #6 cylinder (the fifth cylinder from the flywheel) overlap, that is, when #1 cylinder's piston come at the compression top dead center (OT), adjust the valve clearances by ⇧ mark indicated.
- After having turned the crankshaft by 360° and Intake & exhaust valves of #1 cylinder overlap, that is, when #6 cylinder is in the state of compression TDC (OT), the clearance indicated by ↑ mark is adjusted.

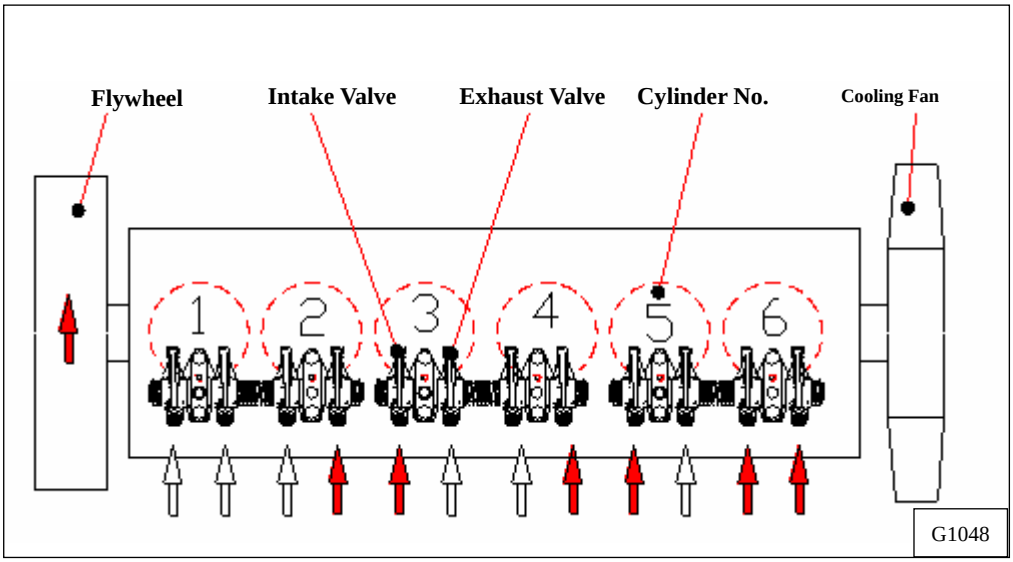

- To adjust the clearance, loosen the lock nuts of rocker arm adjusting screws and push the feeler gauge of specified value between a rocker arm and a valve stem (to measure the clearance of the valve and rocker arm contacting part) and adjust the clearance with adjusting screw respectively and then tighten with the lock nut.

https://truckmanualshub.com/

◆ As for the valve clearance, adjust it when in cold.

Model	Intake Valve	Exhaust Valve
D1146 D1146TI DE08TIS	0.3 mm	0.3 mm

CAUTION :

(1) Crankshaft revolution is done by hands without using a starting motor.

(2) Turn it to the direction of engine rotation, but do not use the installing bolts at the turn.

(3) The cylinder no. and the order of intake and exhaust can be determined from the crank shaft pulley.

- Adjust valve clearance with a feeler gauge and tighten the fixing nuts to specified torque.

Torque	5.0 kg.m

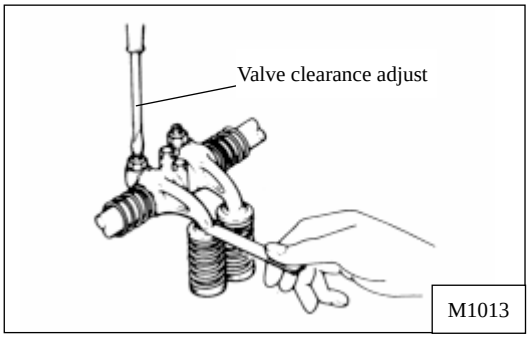

3.3.29. Intake manifold

- Put in the new gasket between the cylinder head and manifold, and assemble the intake manifold by tightening the assembling bolts.

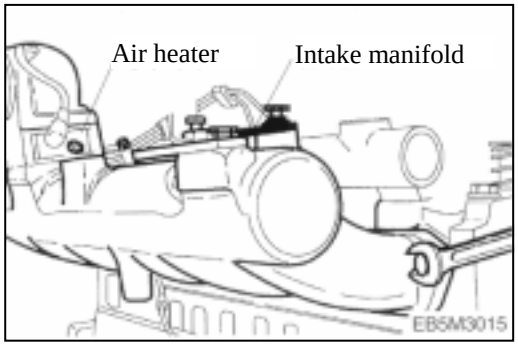

3.3.30. Exhaust manifold

https://truckmanualshub.com/

- Install the exhaust manifold gasket over the stud bolts by aligning the gasket with the exhaust port on the cylinder head so that the face and back of the gasket can be positioned correctly.
- Semi-assemble the exhaust manifold and install the heat resisting plate.
- Assemble them by tightening the assembling bolts. The tightening order of bolts is from the middle to left and right alternately.

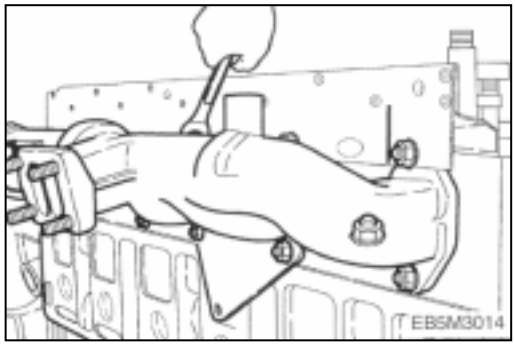

CAUTION :
For upper and lower bolts differ in the length, so use the correct bolts.

3.3.31. Turbocharger (D1146TI, DE08TIS)

- Fit a new gasket over the stud bolts of the exhaust manifold before tightening those turbocharger fixing nuts.
- Install the oil supply pipe and return pipe.
- Tighten the clamps of rubber hose that is connected air pipe to the intercooler.

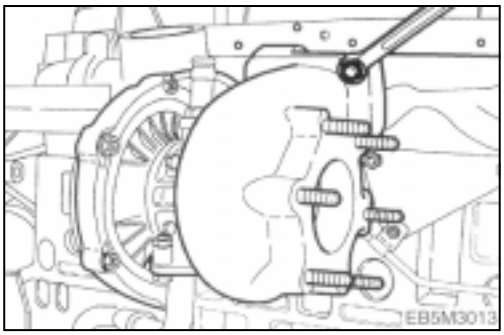

3.3.32. Cooling water pipe

- Attach a new gasket on the cylinder head.
- Install the cooling water pipe and tightening the fixing bolt on it.

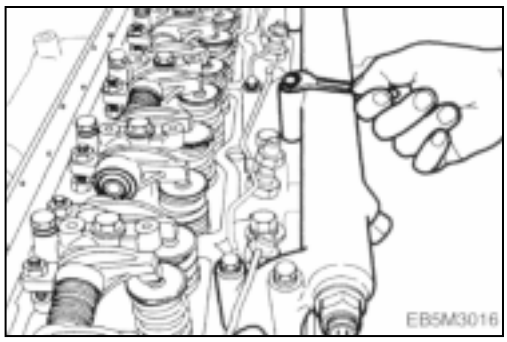

https://truckmanualshub.com/

3.3.33 Idle pulley

- Assemble the air compressor mounting bracket on the timing gear case.
- Install the idle pulley on the air compressor mounting bracket and tightening the fixing bolt.

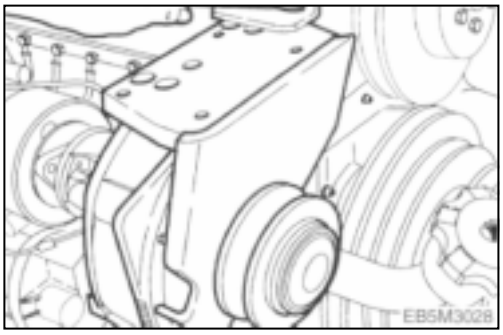

3.3.34 Air compressor & power steering pump

- Couple the power steering oil pump to the air compressor with the driving dog engaged.
- Insert the O-ring coated with grease into the oil outlet of the air compressor.
- Place the air compressor on the mounting bracket carefully and tighten the fixing bolts to the specified torque. (Carefully damage the O-ring)
- Assemble the oil feed pipe.

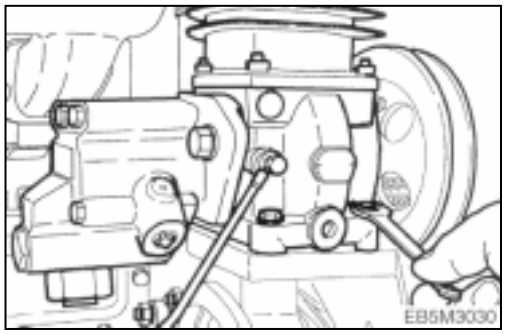

3.3.35. Alternator

- Install the alternator mounting bracket and supporter to the cylinder block, then tighten the fixing bolts.
- Install the alternator with fixing bolts to the mounting bracket.

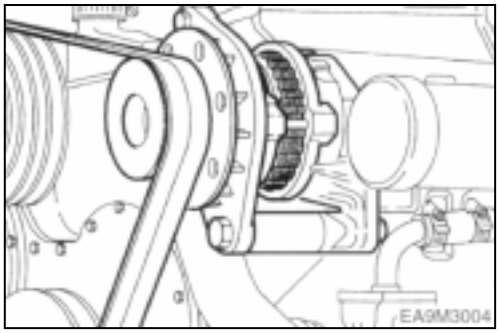

3.3.36. Fuel filter

- Assemble the fuel filter with the intake manifold.
  - Assemble the fuel feed hose according

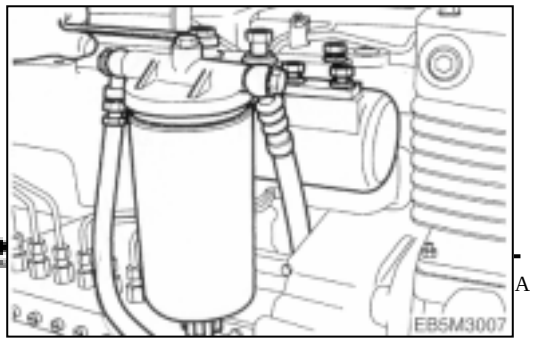

https://truckmanualshub.com/

to the direction of an arrow impressed on the fuel filter head so that fuel can be fed in the sequence of **FUEL FEED PUMP → FUEL FILTER → FUEL INJECTION PUMP**.

3.3.37. Injection nozzle

- Install a new seal ring in the nozzle hole of the cylinder head.
  - As aligning the ball of nozzle with a

groove in the nozzle hole, Insert the nozzle into the cylinder head and tighten the nozzle.

Torque	7.0 kg.m

3.3.38. Fuel injection pipe

- Semi-assemble a nut at both ends of the fuel injection pipe and tighten them up one by one to specified torque.

Torque	3.0 kg.m

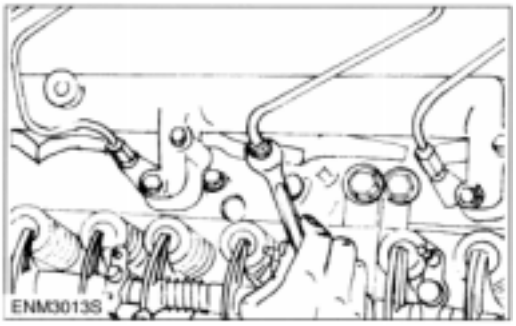

- Assemble the fuel return pipe on the nozzle holder.
- Connect the injection pump lubricating oil pipe with a hollow screw.

CAUTION :
Be sure not to damage the connection part due to over-tightening the hollow

https://truckmanualshub.com/

screw.

3.3.39. Cylinder head cover

- Attach a new gasket on the cylinder head cover.
- Assemble the cylinder head cover to the cylinder head by tightening the cap bolts for fixing the cylinder head cover.

Torque	1.2 kg.m

- Assemble the breather and breather hose.
- Fit the oil filler cap on the cylinder head cover.

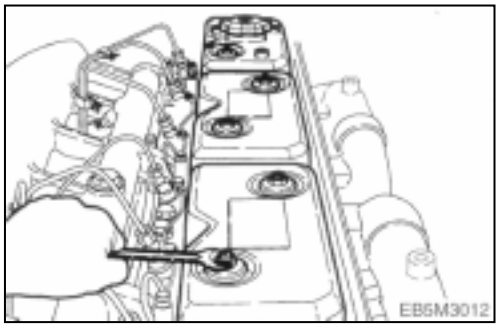

3.3.40. Cooling fan

- Install the flange to the water pump pulley, then assemble the cooling fan to the pulley by tightening the fixing bolts.

Torque	4.4 kg.m

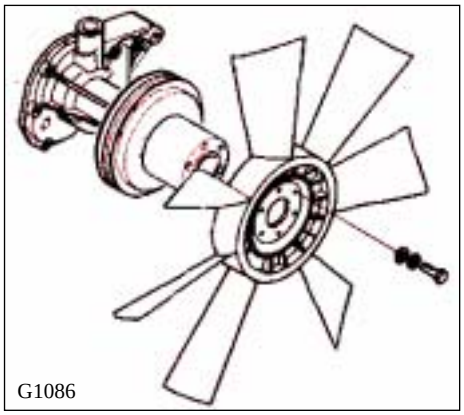

3.3.41. Belt

- Install the V-belt on the crank pulley, alternator pulley and water pump pulley.
- Adjust the V-belt tension using the tension adjusting support.

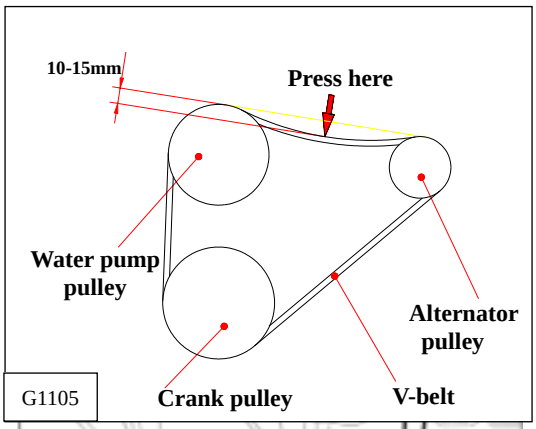

3.3.42. Oil level gauge

- Apply sealant (Locktite #262) to the

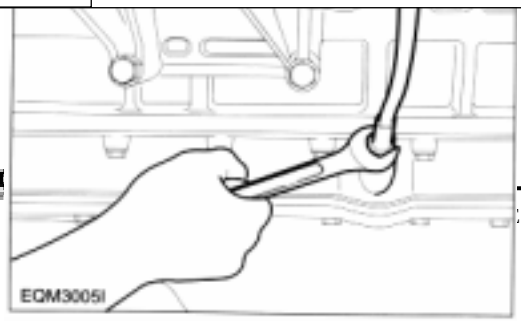

https://truckmanualshub.com/

bottom side of the guide tube.

- Then assemble the guide tube and oil level gauge on the oil pan.

3.3.43. Others

- Assemble by connecting the other oil and fuel hoses.

https://truckmanualshub.com/

3.4. Breaking in

3.4.1. Preparations for breaking-in

- Fill of new engine oil through the oil filler cap.
- When measuring the oil level with the oil level gauge with the engine mounted, the oil level must indicate about 10mm above the max. line.
- Connect water hoses and fill up cooling water.
- Connect the fuel hoses to the fuel tank and to top(radiator or surge tank).
  Check the air bleeding of the fuel system.
- Connect the electrical systems such as starter, air heater, etc. with power source.

3.4.2. Operation of a new engine (*Break-In*)

Because the sliding surfaces of a new engine are not lapped enough, the oil film can be destroyed easily by overload or overspeed and the engine life-time may be shortened.

Therefore the following things must be obeyed by all means.

Up to the first 1,000km(50 hours)

- ▲ Engine should be run at fast idling until the temperature of the engine becomes normal operating condition.
- ▲ Overload or continuous high speed operation should be avoided.
- ▲ High speed operation with no load should be prevented.
- ▲ Abrupt start and stop of the engine should be avoided.
- ▲ Engine speed must be under 70% of its maximum speed.
- ▲ Maintenance and inspection must be accomplished thoroughly.

3.4.3. Check points for break-in

During the *break-in* (the initial running of the engine) period, be particularly observant as follows:

a) Check engine oil level frequently. Maintain oil level in the safe range, between the "**min.**" and "**max.**" marks on dipstick.

https://truckmanualshub.com/

Note :
If you have a problem getting a good oil level reading on dipstick, rotate the level gauge 180° and re-insert for check.

b) Watch the oil pressure warning lamp. If the lamp blinks, it may be the oil pick-up screen is not covered with oil. Check oil level gauge. Add oil to the oil pan, if required. Do not overfill. If level is correct and the status still exists, see your DEALER for possible switch or oil pump and line malfunction.

Note :
Oil pressure will rise as RPM increases, and fall as RPM decreases. In addition, cold oil will generally show higher oil pressure for any specific RPM than hot oil. Both of these conditions reflect normal engine operation.

c) Watch the engine water temperature gauge and be sure there is proper water circulation. The water temperature gauge needle will fluctuate if water level in expansion tank is too low.
At the end of the break-in period, remove break-in oil and replace the oil filter. Fill oil pan with recommended engine oil. Refer to following table.

<Recommended Engine Oil and Capacity>

Engine oil capacity					Recommend oil
Model		Max. line(lit)	Min line (lit)	Total (lit)	API No.
D1146	Bus	15.5	12	17.5	API CD grade or above CE grade
D1146TI	Truck	15.5	12	17.5	
	Truck	20	17	22	
DE08TIS	Bus	15.5	12	17.5	ACEA-E2 or ACEA-E3 (API CH-4)
	Truck	20	17	22	

* If long oil change intervals are to be used, ACEA-E3 oil must be used.

https://truckmanualshub.com/

4. Maintenance of Major Components

4.1. Cooling System

4.1.1. General information

This engine is water-cooling type. Heat from the combustion chamber and engine oil heat are cooled down by coolant and radiated to the outside, resulting in the normal operation of the engine.

Looking into the cooling system, the water pumped up by the water pump circulates around the oil cooler through the water pipe to absorb the oil heat, and then flows through the water jacket of the cylinder block and water passage of the cylinder head to absorb the heat of the combustion chamber.

The water absorbing the oil heat and combustion chamber heat goes on to the thermostat through the water pipe, and circulates to the water pump if water temperature is lower than the valve opening temperature on the thermostat, while circulating to the radiator at water temperature higher than the valve opening temperature. At the radiator, the heat absorbed in the coolant is radiated to cool down and the coolant recirculates to the water pump.

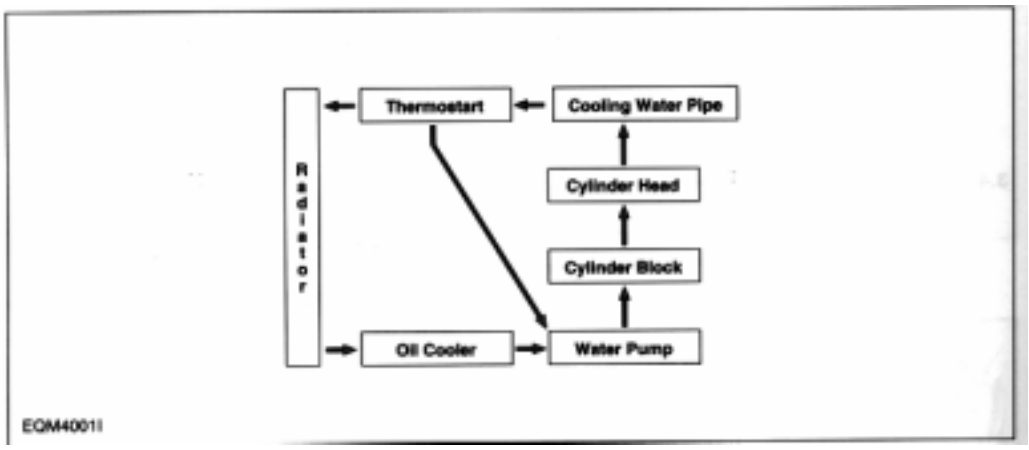

4.1.2. Specification

Item		Specification	
1. Water pump	Type	Centrifugal type	
	Pump speed	2,000 rpm	2,700 rpm
	Delivery capacity	about 190 liter/min	about 280 liter/min
	Operation pressure	0.5 bar	0.8 bar
	Allowable back pressure	bellow 0.5 bar	
2. Thermostat	Operating temperature	79°C	83°C
	Valve lift	8 mm or more (at 94°C)	8 mm or more (at 94°C)
	Operating temperature	79 ~ 94°C	83 ~ 95°C
3. Cooling fan and belt			
Fan diameter – Number of blades		Truck : ϕ700mm – 8	
Fan belt tension		15mm deflection by thumb	

https://truckmanualshub.com/

4.1.3. Thermostat

- **General descriptions and main data**

The thermostat maintains a constant temperature of coolant and improves thermal efficiency of the engine by preventing heat loss.

Namely, when the temperature of coolant is low, the thermostat valve is closed to make the coolant bypass to directly enter the water pump; when the coolant temperature rises to open wide the thermostat valve, the bypass circuit is closed and the water passage to the radiator is opened so that the coolant is forced to flow into the radiator.

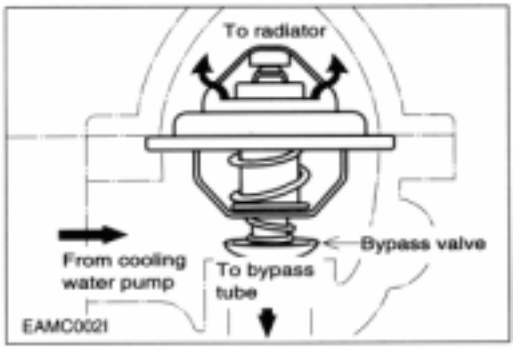

Item	Specifications		
	In moderate climates		In tropical climates
	Bus	Truck	
Type	Wax-pallet type		Wax-pallet type
Open at	79 °C	83 °C	71 °C
Open wide at	94 °C	95 °C	85 °C
Valve lift	8mm or more	10mm or more	Bus : 8mm or more Truck : 10 mm or more

CAUTION :

There are 2 kinds of thermostats according to surrounding and operating conditions. One is named by 71 °C type and the other is 83 °C.

- **Inspecting**

(1) Check the wax pallet and spring for damage.

(2) Put the thermostat in a container of water, then heat the water slowly and check temperature with a thermometer. If the valve lift is 0.1 mm (starting to open) at temperature of 83 °C and 8

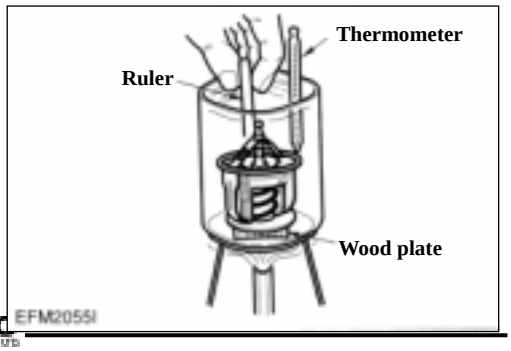

https://truckmanualshub.com/

mm or more (full open) at temperature of 95 °C, the thermostat is normal.

- **Replacing thermostat and precautions for handling**

(1) Precautions for handling

The wax pallet type thermostat does not react as quickly as bellows type one to a variation of temperature of coolant. Such relatively slow reaction is mainly due to the large heat capacity of the wax pellet type thermostat. Therefore, to avoid a sharp rise of coolant temperature, it is essential to idle the engine sufficiently before running it. In cold weather, do not run the engine at overload or overspeed it immediately after starting off.

(2) When draining out or replenishing coolant, do it slowly so that air is bled sufficiently from the entire cooling system.

(3) Replacing thermostat

If the thermostat is detected defective, replace with a new one.

https://truckmanualshub.com/

4.1.4. Diagnostics and troubleshooting

Complaints	Possible causes	Corrections
1. Engine overheating	● Lack of coolant ● Radiator cap pressure valve spring weakened ● Fan belt loosened or broken ● Fan belt fouled with oil ● Thermostat inoperative ● Water pump defective ● Restrictions in water passages due to deposit of scales ● Injection timing incorrect ● Restriction in radiator core ● Gases leaking into water jacket due to broken cylinder head gasket	● Replenish coolant ● Replace cap ● Adjust or replace fan belt ● Replace fan belt ● Replace thermostat ● Repair or replace ● Clean radiator and water passages ● Adjust injection timing correctly ● Clean exterior of radiator ● Replace cylinder head gasket
2. Engine overcooling	● Thermostat inoperative ● Ambient temperature too low	● Replace thermostat ● Install radiator curtain
3. Lack of coolant	● Radiator leaky ● Radiator hoses loosely connected or damaged ● Radiator cap valve spring weakened ● Water pump leaky ● Heater hoses loosely connected or broken ● Cylinder head gasket leaky ● Cylinder head or cylinder block cracked	● Correct or replace ● Retighten clamps or replace hoses ● Replace cap ● Repair or replace ● Tighten or replace hoses ● Replace cylinder head gasket ● Replace cylinder head or block
4. Cooling system noisy	● Water pump bearing defective ● Fan loosely fitted or bent ● Fan out of balance ● Fan belt defective	● Replace bearing ● Retighten or replace fan ● Replace fan ● Replace fan belt

https://truckmanualshub.com/

4.2. Lubricating System

4.2.1. General descriptions and specifications

- **General descriptions**

All the engine oil pumped up from the oil pan by the gear type oil pump is filtrated through the oil cooler and oil filter, and this filtrated oil is forced through the main oil gallery in the cylinder block from where it is distributed to lubricate the various sliding parts, and fuel injection pump in order to ensure normal engine performance.

- **Specifications**

Item	Specifications	Item	Specifications
Lubricating system	Forced pressure circulation	Oil filter type	Full flow
Oil pump type	Gear type	Bypass for filter element	
Relief valve opening pressure	10±1.5 kg/cm^2	Valve opening pressure	1.8 ~ 2.3 kg/cm^2
Bypass for oil cooler		Bypass for entire oil filter	
Opening pressure	5+1 kg/cm^2	Valve opening pressure	4.0 4.8 kg/cm^2
Adjusting valve for spray nozzle			
Opening pressure	1.5 ~ 1.8 kg/cm^2		

- **Diagram of lubricating system**

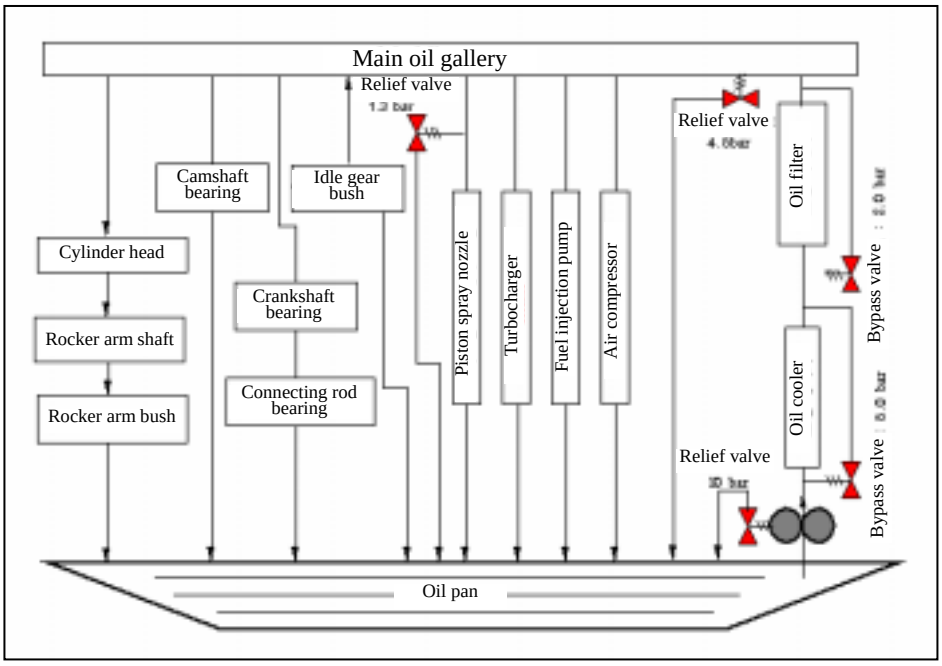

Printed in Jan. 2001 PS-MMA0415-E1A

https://truckmanualshub.com/

4.2.2. Oil pump

- **Disassembly**

(1) Disassembly of oil pump drive gear

a. Unscrew the screw and disassemble the oil relief valve.

b. Unfold the washer for the oil pump drive gear fixing nut and remove the nut.

c. Disassemble the drive gear.

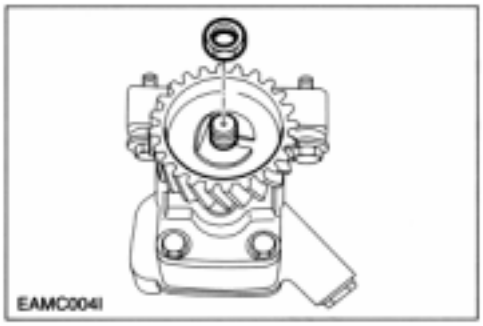

(2) Remove the oil pump cover fixing nuts and disassemble the oil pump cover.
The oil pump cover is fixed with the two dowel pins.

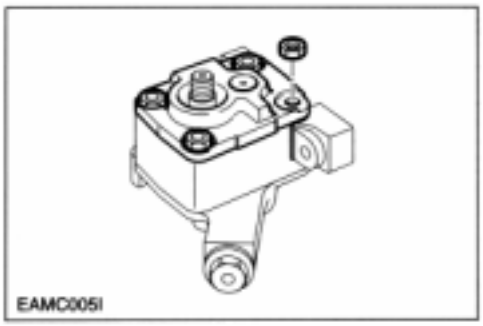

(3) Disassemble the drive gear and driven gear.

- **Inspection and correction**

(1) With steel rule and feeler gauge, measure the axial end play of the oil pump gear. Replace if the measured value is beyond the limit.

End play limit	0.025 ~ 0.089 mm

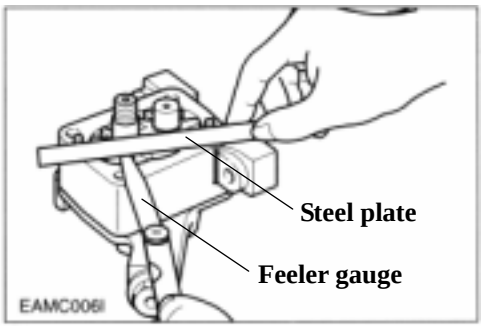

(2) With a feeler gauge, measure the amount of backlash between the oil pump drive gear and driven gear.. Replace if the measured value is beyond the limit.

Backlash limit	0.50 ~ 0.64 mm

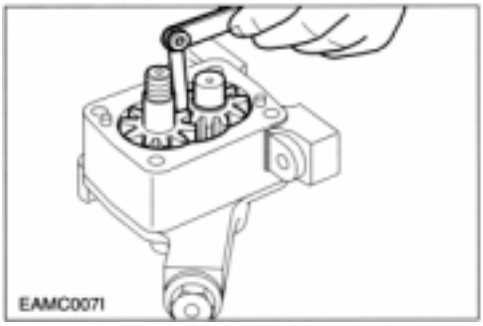

https://truckmanualshub.com/

(3) Measuring clearance between drive shaft and bushing

a. Measure the outside diameters of the drive shaft and driven shaft, and replace if the measured values are less than the limit (ϕ16.95mm)

Standard	ϕ16.95 ~ ϕ16.968 mm

b. Measure the inside diameter of the pump body bushing to determine the clearance between the bushing and shaft, and compare the measured value with the standard value to determine whether to replace or not.

Clearance	0.032 0.077 mm

- **Reassembly**

(1) For reassembly, reverse the disassembly sequence.

https://truckmanualshub.com/

4.2.3. Diagnostics and troubleshooting

Complaints	Possible causes	Corrections
1. Oil consumption excessive	● Poor oil ● Oil seal or packing leaky ● Pistons or piston rings worn ● Cylinder liner worn ● Piston rings sticking ● Valve guide oil seals or valve guides, or valve stem worn	● Use suggested oil ● Replace ● Replace pistons and/or piston rings ● Replace cylinder liner ● Replace pistons and/or piston rings ● Replace
2. Oil pressure too low	● Poor oil ● Relief valve sticking ● Restrictions in oil pump strainer ● Oil pump gear worn ● Oil pump feed pipe cracked ● Oil pump defective ● Oil pressure gauge defective ● Various bearings worn	● Use suggested oil ● Replace ● Clean strainer ● Replace ● Replace ● Correct or replace ● Correct or replace ● Replace
3. Oil deteriorates quickly	● Restriction in oil filter ● Gases leaking ● Wrong oil used	● Replace filter element ● Replace piston rings and cylinder liner ● Use suggested oil

https://truckmanualshub.com/

4.3. Fuel Injection Pump

4.3.1. General information of fuel system

The fuel system consists of the fuel tank, injection pump, injection nozzle, fuel filter, and fuel lines such as pipes and hoses necessary to connect those components.

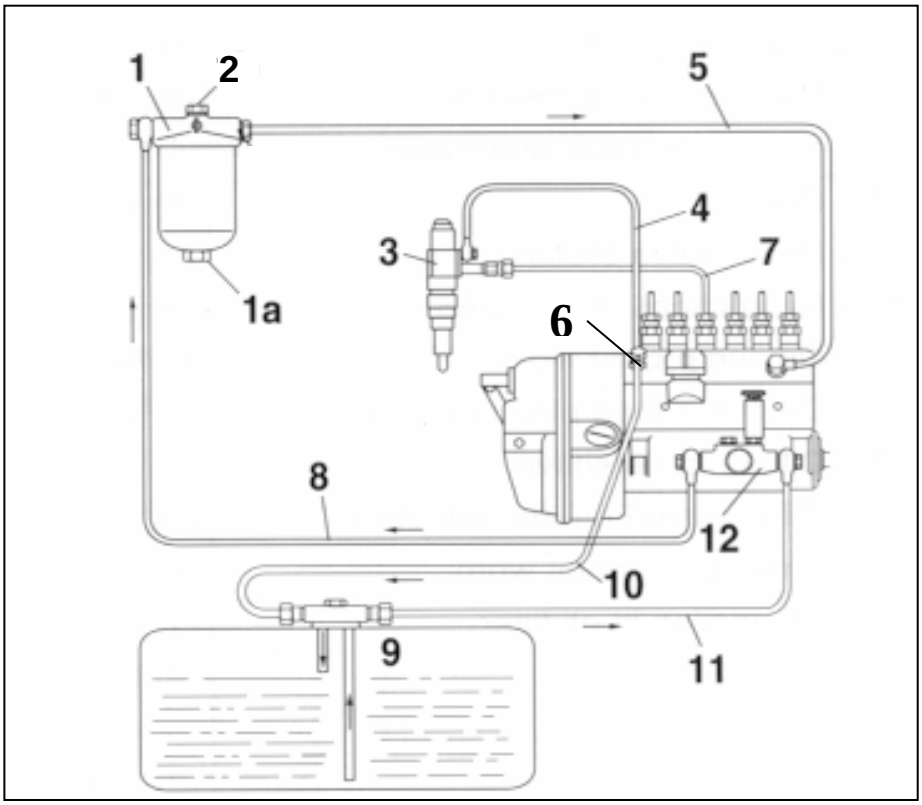

1.	Fuel filter	7.	Fuel injection pipe
1a	Water separater	8.	Fuel pipe (manual pump → filter)
2.	Air bleeding screw (for fuel filter)	9.	Fuel tank
3.	Injection nozzle	10.	Fuel return pipe
4.	Overflow tube	11.	Suction pipe
5.	Fuel pipe (filter → injection pump)	12.	Feed pump
6.	Overflow valve	13.	Injection pump

4.3.2. Injection pump

The components relating to the injection pump should be serviced at regular intervals as the plunger and delivery valve may be worn after a given length of time for use and cause the deterioration of the engine.

Make sure that servicing should be performed at the professional maintenance shop as authorized by Bosch or Zexel Company.

For adjustment of fuel injection volume, refer to the 'Specifications of fuel injection pump' described on the following pages.

https://truckmanualshub.com/

1) D1146

(1) Injection pump ass'y : 65.11101-7259A (101603-9981 ZEXEL)

- Injection pump : KP-PE6AD95B412RS2 (101060-6100)
- Governor : KP-EP/RLD250-1400AIFFL (105931-5901)
- Timer : KP-EP/SA900-1250B4DR (105644-0520)
- Fuel feed pump : KP-FP/KE-ADS (105210-5280)
- Coupling : 105662-1290
- Micro switch : 153169-3320
- Plunger & barrel : 131153-1720
- Delivery valve : 131160-3620

(2) Nozzle holder assembly : 65.10101-7050 (9134-153C LUCAS)

(3) Nozzle : 65.10102-6026 (9135-143 LUCAS)

(4) Injection pipe : 65.10301-6036A

(5) Firing order: : 1 – 5 – 3 – 6 – 2 – 4

(6) Injection timing : BTDC 15°

(A) Test condition for injection pump	Nozzle & Holder Ass'y	105780-8140	Opening pressure : 175 bar
	Injection pipe(ID x OD - L)	-	ϕ2.0 x ϕ6.0– 600 mm
	Test oil	ISO4113	Temperature : 40 ±5°C
(B) Engine standard parts	Nozzle & holder Ass'y	65.10102-6026	Nozzle (5 x ϕ0.29)
		65.10101-7050	214 kg/cm^2
	Injection pipe(ID x OD - L)	65.10301-6036A	ϕ1.8 x ϕ6 – 550mm

Rack diagram and setting valve at each point

Power	Check point	Rack position (mm)	Pump speed (rpm)	Injection Q'ty on RIG (mm^3 / 1,000 st) (A) Test condition for inj. pump	(B) Engine standard parts	Press. (mmHg)
	H	≠9.7	300	8.5±1.5	-	-
	A	11.8	700	79.5±1	-	-
	B	11.9	1250	(84.0±2.0)	-	-
	C	11.55	500	(65.0±2.0)	-	-
	I	-	100	(115.0±15)	-	-
	Boost pressure : zero boost					

Governor weight	740 g	Lever ratio(min/max)	1 : 1.15 / 1 : 3.9
Governor spring(outer)	k=1.8 kgf/mm	Governor spring(inner)	k=0.6 kgf/mm
Idle spring(outer)	k=0.7 kgf/mm	Idle spring(inner)	k=0.05 kgf/mm
Start spring	k=0.005 kgf/mm	Delivery valve: retraction pressure	59mm^3/st , t=0.99
Plunger	ϕ9.5 Left hand 20+45lead	Delivery valve: opening pressure	20.8 kgf/cm^2
Feed pump	105210-5280	Delivery valve: Spring	k=1.63 kgf/mm

Printed in Jan. 2001 PS-MMA0415-E1A

https://truckmanualshub.com/

(7) Governor adjustment (D1146)

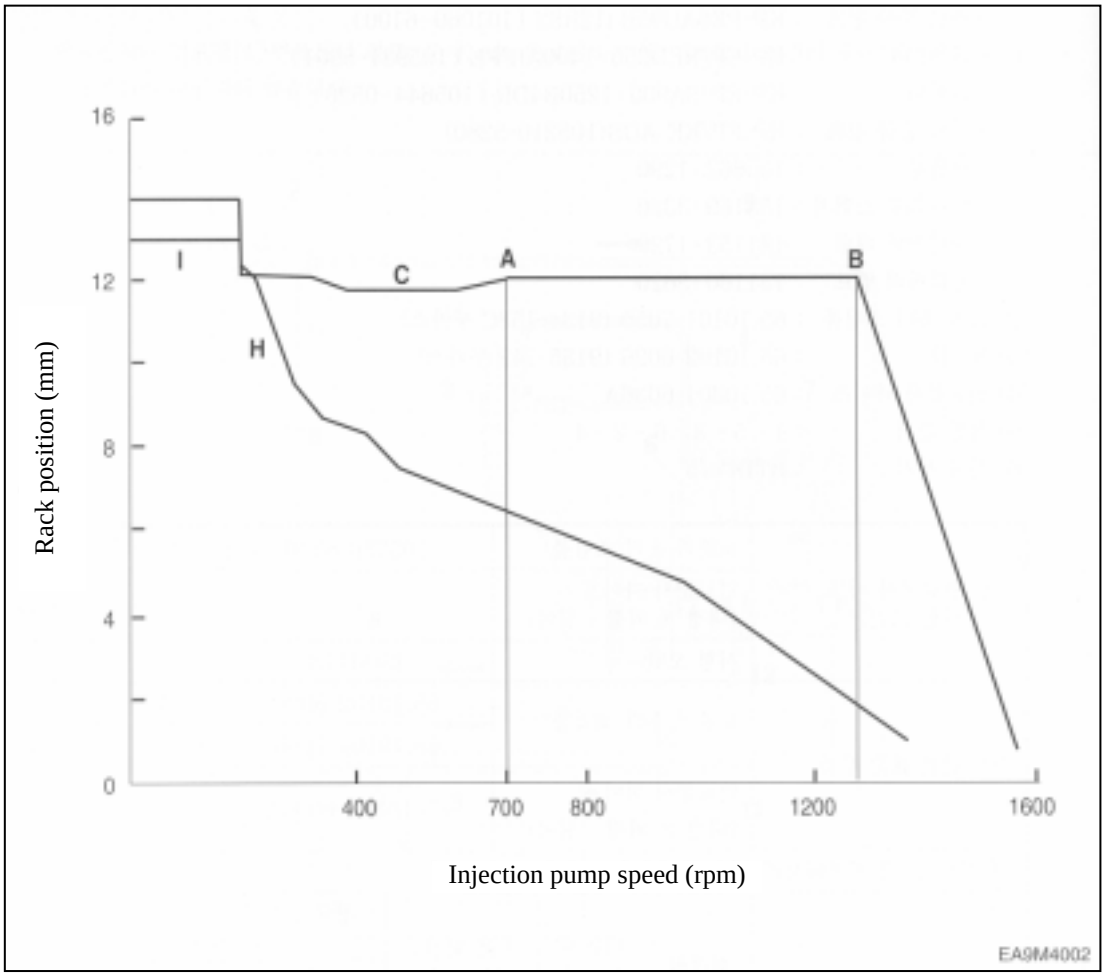

https://truckmanualshub.com/

2) D1146TI

(1) Injection pump ass'y : 65.11101-7298 (101701-9630 ZEXEL)

- Injection pump : KP-PE6AD100B412RS2 (101060-6541)
- Governor : KP-EP/RLD250-1400A1FXL (105932-3550)
- Timer : KP-EP/SA700-1100630DR (105644-0570)
- Fuel feed pump : KP-FP/KE-ADS (105210-5280)
- Coupling : 105662-1490
- Micro switch : 153169-3320
- Plunger & barrel : 131150-3120
- Delivery valve : 131160-8620

(2) Nozzle holder assembly : 65.10101-7293 (9134-153C LUCAS)

(3) Nozzle : 65.10102-6042 (9135-283 LUCAS)

(4) Injection pipe : 65.10301-7007

(5) Firing order: :1 – 5 – 3 – 6 – 2 – 4

(6) Injection timing : BTDC 9°

(A) Test condition for injection pump	Nozzle & Holder Ass'y	10101-7293	Opening pressure : 175 bar
	Injection pipe(ID ,OD ,L)	-	ϕ2.0 x ϕ6.0– 650 mm
	Test oil	ISO4113	Temperature :40 ±5°C
(B) Engine standard parts	Nozzle & holder Ass'y	65.10102-6042	Nozzle (5 x ϕ0.32)
		65.10101-7293	214 kg/cm^2
	Injection pipe(ID, OD ,L)	65.10301-7007	ϕ1.8 x ϕ6 - 550mm

Rack diagram and setting valve at each point

Power	Check point	Rack position (mm)	Pump speed (rpm)	Injection Q'ty on RIG (mm^3 / 1,000 st) (A) Test condition for inj. pump	(B) Engine standard parts	Press. (mmHg)
	H	≠9.7	300	8.5±1.5	-	-
	A	11.9	700	98.5±1.6	-	-
	B	12.3	1100	(106.5±2.0)	-	-
	C	11.7	500	(82±2.0)	-	-
	D	10.5	500	(58.7±2.0)	-	-
	P1	10.5	500	-	-	250
	P2	11.7	500	-	-	100

Governor weight	740 g	Idle spring		k=0.7+0.05 kgf/mm
Governor spring	k=1.0+0.6 kgf/mm	Boost spring		k=0.54 kgf/mm
Start spring	k=0.005 kgf/mm	Delivery Valve	retraction pressure	51mm^3/st , t=0.15
Plunger	ϕ10 Right hand 20+50lead		opening pressure	20.8 kgf/cm^2
Lever ratio(min/max)	1 : 1.15 / 1 : 3.9		spring	k=1.63kgf/mm

https://truckmanualshub.com/

(7) Governor adjustment (D1146T)

a) Governor adjustment

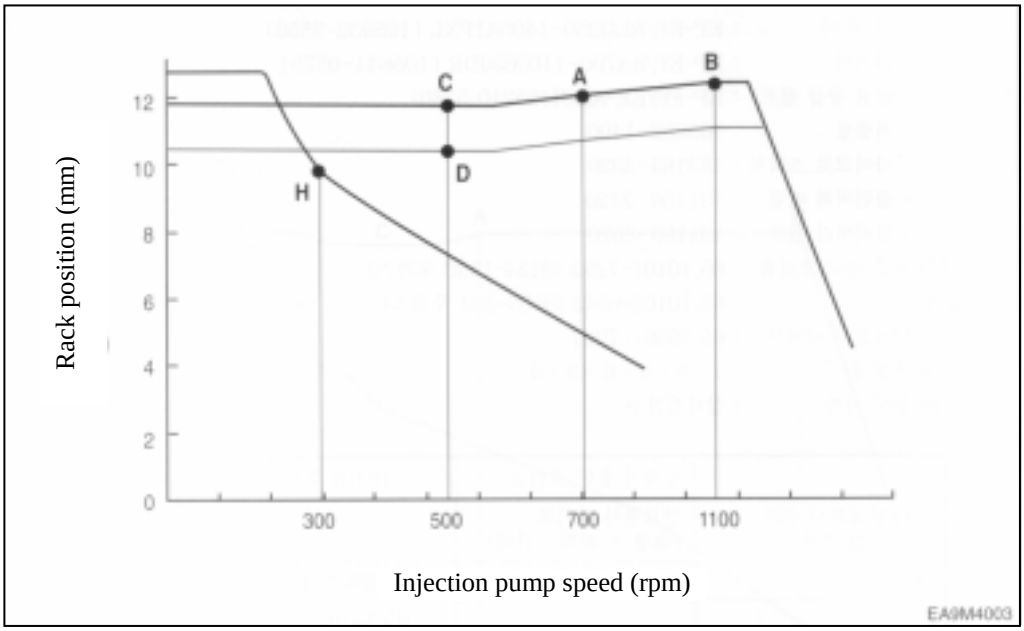

b) Boost compensator adjustment

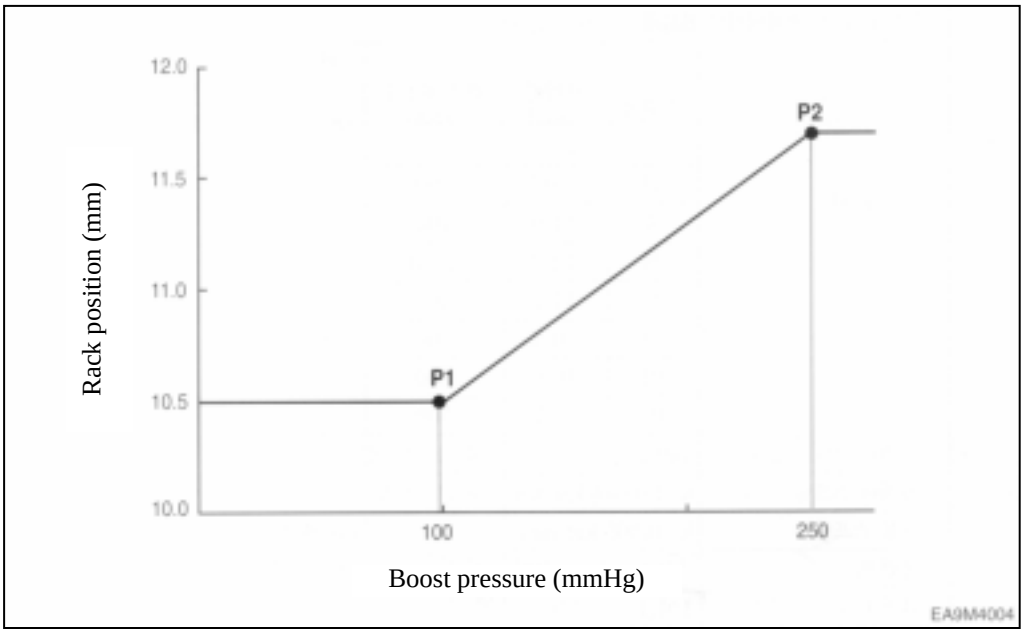

https://truckmanualshub.com/

3) DE08TIS (225PS)

(1) Injection pump ass'y : 65.11101-7331 (106671-9960 ZEXEL)

- Injection pump : NP-PE6P120/721RS3S (106067-6280 ZEXEL)
- Governor : NP-EP/RLD300-1100P5JXR (105923-4810)
- Timer : 105681-2670
- Coupling : 105663-0470
- Plunger & barrel : 134153 -2420
- Delivery valve : 134180 - 0420

(2) Nozzle holder assembly : 65.10101-7087 (Y430 K02 049 BOSCH)

(3) Nozzle : 65.10102-6057 (0 433 171 694 BOSCH)

(4) Injection pipe : 65.10301-6049 , 65.10301-6052

(5) Firing order: : 1 – 5 – 3 – 6 – 2 – 4

(6) Injection timing : BTDC 3°

(A) Test condition for injection pump	Nozzle & Holder Ass'y	Y430 k02 049 BOSCH	Opening pressure : 214 ±8 bar
	Injection pipe(IDxOD - L)	-	ϕ2.2 x ϕ6.35 – 650 mm
	Test oil	ISO4113	Temperature :40 ±5°C
(B) Engine standard parts	Nozzle & holder Ass'y	65.10102-6057	Nozzle (5 x ϕ0.34)
		65.10101-7087	Opening pressure 1st : 160 kg/cm 2nd : 220 kg/cm^2
	Injection pipe(IDxOD - L)	65.10301-6076 65.10301-6077	ϕ2.2 x ϕ6.35 – 650mm

Rack diagram and setting valve at each point

Power	Check point	Rack position (mm)	Pump speed (rpm)	Injection Q'ty on RIG (mm^3 / 1,000 st) (A) Test condition for inj. pump	(B) Engine standard parts	Press. (mmHg)
	A	R1(12.9)	1100	131±2	-	-
	B	R1-1.5	600	(122)	-	-
	C	R2(R1-1.5)	500	(126)	-	(140)
	D	R2-1.0	500	(100)	-	50
	H	≠ 8.5	300	14.5±1.5	-	-
	I	≠ R1	100	(160)	-	-

Governor weight	850 g	Lever ratio (min.)		1 : 1.1
Governor spring(outer)	k=9.8 N/mm	Governor spring(inner)		k=5.88 N/mm
Idle spring (outer)	k=4.9 N/mm	Idle spring (inner)		k=0.49 N/mm
Start spring	k=0.049 N/mm	Delivery valve	retraction pressure	0 mm^3, (Ø8mm)
Boost srping	k=23.5 N/mm		opening pressure	0.87 MPa
Plunger	ϕ12 Right hand 35lead		spring	k=12.7 N/mm

Printed in Jan. 2001 PS-MMA0415-E1A

https://truckmanualshub.com/

(7) Governor adjustment (DE08TIS-225PS)

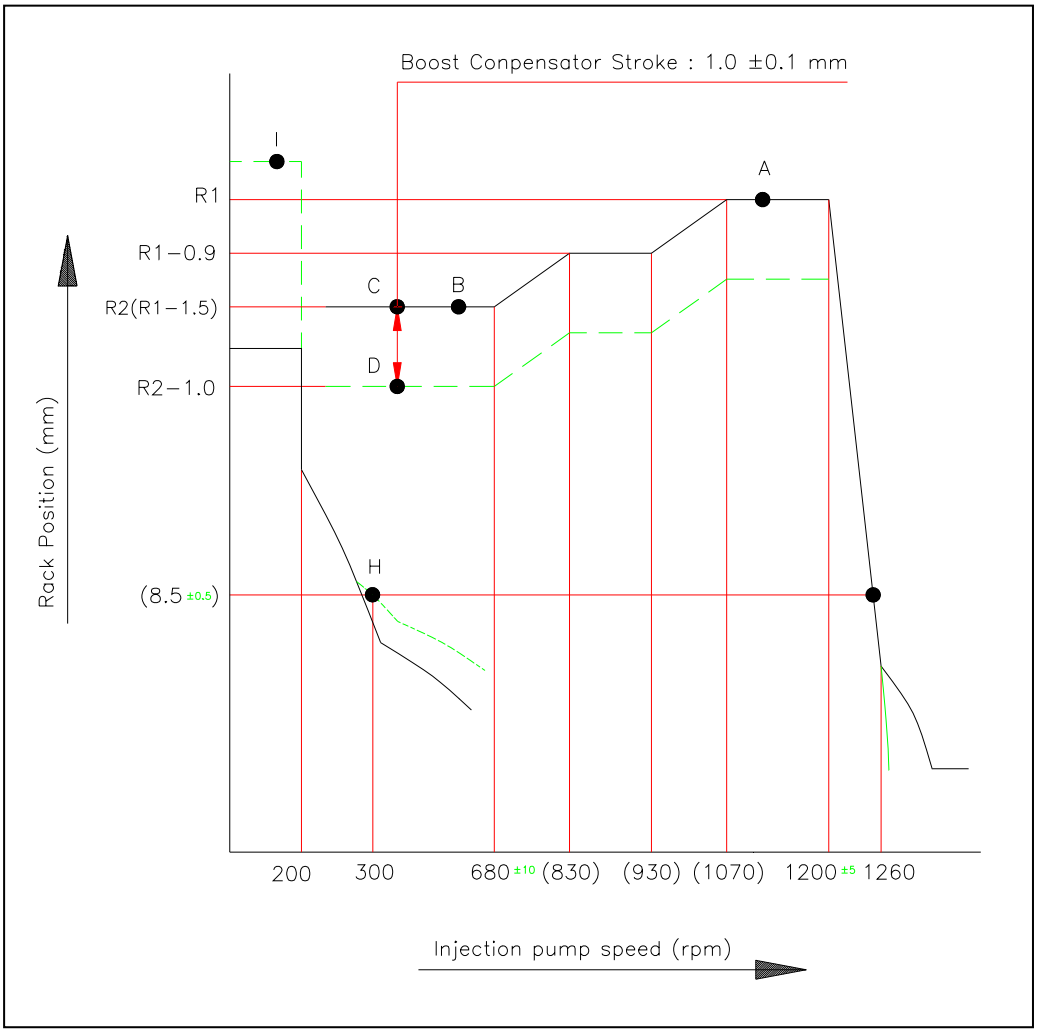

Printed in Jan. 2001 PS-MMA0415-E1A

https://truckmanualshub.com/

3) DE08TIS (240PS)

(1) Injection pump ass'y : 65.11101-7331 (106671-9960 ZEXEL)

- Injection pump : NP-PE6P120/721RS3S (106067-6280 ZEXEL)
- Governor : NP-EP/RLD300-1100P5JXR (105923-4810)
- Timer : 105681-2670
- Coupling : 105663-0470
- Plunger & barrel : 134153 -2420
- Delivery valve : 134180 - 0420

(2) Nozzle holder assembly : 65.10101-7087 (Y430 K02 049 BOSCH)

(3) Nozzle : 65.10102-6057 (0 433 171 694 BOSCH)

(4) Injection pipe : 65.10301-6049 , 65.10301-6052

(5) Firing order: : 1 – 5 – 3 – 6 – 2 – 4

(6) Injection timing : BTDC 3°

(A) Test condition for injection pump	Nozzle & Holder Ass'y	Y430 k02 049 BOSCH	Opening pressure : 214 ±8 bar
	Injection pipe(IDxOD - L)	-	ϕ2.2 x ϕ6.35 – 650 mm
	Test oil	ISO4113	Temperature :40 ±5°C
(B) Engine standard parts	Nozzle & holder Ass'y	65.10102-6057	Nozzle (5 x ϕ0.34)
		65.10101-7087	Opening pressure 1st : 160 kg/cm 2nd : 220 kg/cm^2
	Injection pipe(IDxOD - L)	65.10301-6076 65.10301-6077	ϕ2.2 x ϕ6.35 – 650mm

Rack diagram and setting valve at each point

Power	Check point	Rack position (mm)	Pump speed (rpm)	Injection Q'ty on RIG (mm^3 / 1,000 st)		Press. (mmHg)
				(A) Test condition for inj. pump	(B) Engine standard parts	
	A	R1(12.9)	1100	131±2	-	-
	B	R1-1.5	600	(122)	-	-
	C	R2(R1-1.5)	500	(126)	-	(140)
	D	R2-1.0	500	(100)	-	50
	H	≠ 8.5	300	14.5±1.5	-	-
	I	≠ R1	100	(160)	-	-

Governor weight	850 g	Lever ratio (min.)		1 : 1.1
Governor spring(outer)	k=9.8 N/mm	Governor spring(inner)		k=5.88 N/mm
Idle spring (outer)	k=4.9 N/mm	Idle spring (inner)		k=0.49 N/mm
Start spring	k=0.049 N/mm	Delivery valve	retraction pressure	0 mm^3, (Ø8mm)
Boost srping	k=23.5 N/mm		opening pressure	0.87 MPa
Plunger	ϕ12 Right hand 35lead		spring	k=12.7 N/mm

Printed in Jan. 2001 PS-MMA0415-E1A

https://truckmanualshub.com/

(7) Governor adjustment (DE08TIS-240PS)

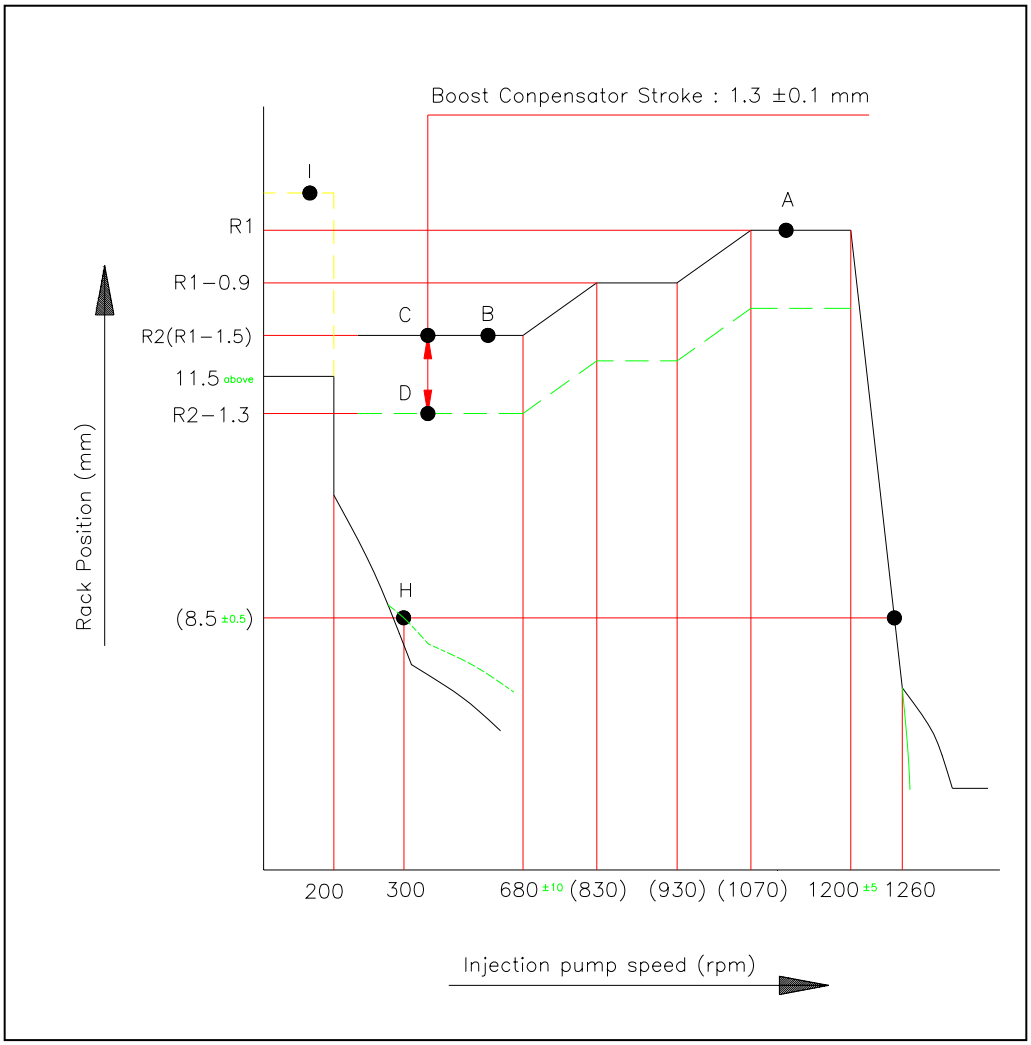

Printed in Jan. 2001 PS-MMA0415-E1A

https://truckmanualshub.com/

4.3.4. Fuel feed pump

1) General descriptions and construction

The P-type injection pump is mounted with K-ADS or KP type feed pump. These pumps have the same basic construction and operation, and the general descriptions of the KP type pump are given below:

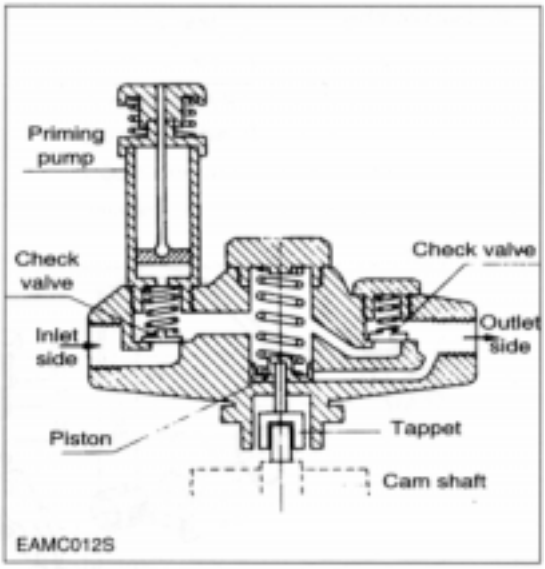

The figures show its construction (right figure) and operation (below figure). The piston in the fuel feed pump is driven by the push rod and tappet via the camshaft of injection pump and performs reciprocating operation to control the suction and delivery of fuel. When the cam reaches the Bottom Dead Center as shown in the figure, the fuel is drawn in through the check valve on the inlet side.

The fuel pressurized as the cam rotates on flows through the check valve on the outlet side as shown in (B). If the feeding pressure increases abnormally, the spring is compressed, resulting in interrupting further delivery of fuel as shown in (C).

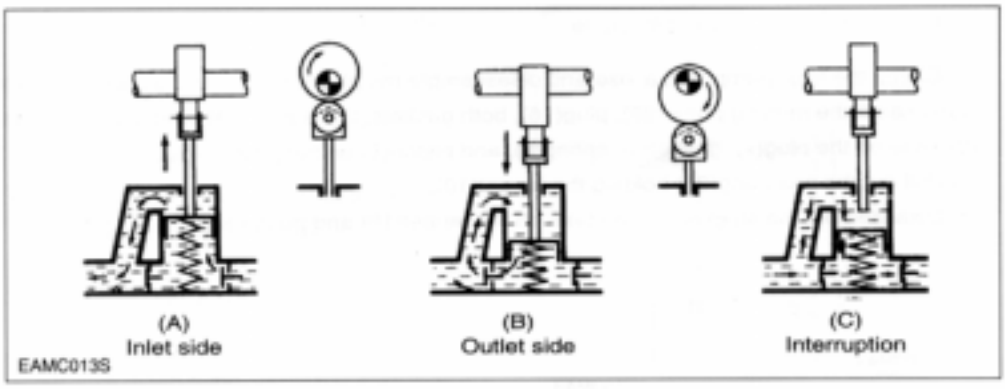

This feed pump is mounted with a priming pump designed to permit manual feeding of fuel from the fuel tank with the injection pump mounted in the engine. During the manual feeding operation, air must be bled from the fuel lines.

When using the priming pump, fix it securely to prevent the possible entry of moisture or other foreign substances in the inside of feed pump.

https://truckmanualshub.com/

In addition, a strainer is fitted into joint bolt on the inlet side of the fuel feed pump to filtrate any foreign substances possibly mixed in fuel.

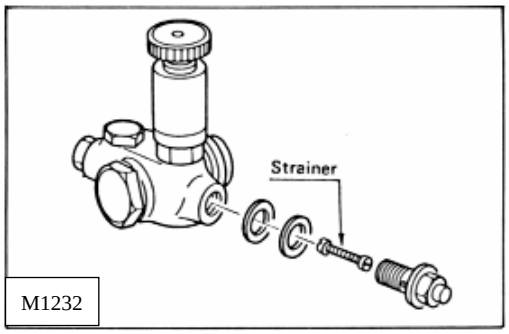

2) disassembly

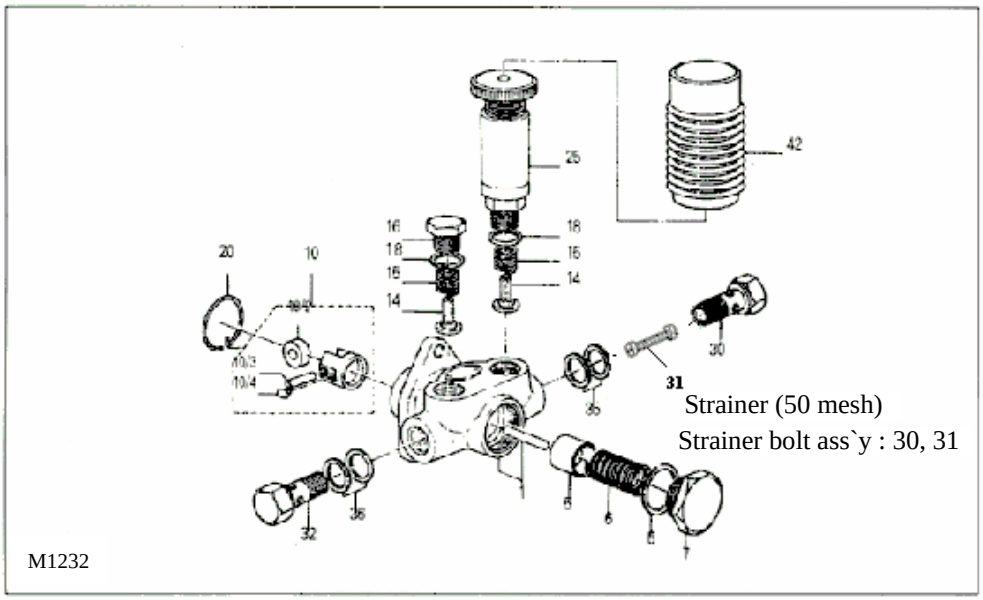

- Clamp the feed pump with a vise and disassemble the hollow screw (30, 32), strainer (31) and seal ring (35, 36).
- Take off the priming pump (25), plug (16), both seal rings (18), spring (15), and check valve (14).
- Take off the plug (7), seal ring (8), spring (6), and piston (5) on the piston side.
- Pull out the snap ring (20) holding the tappet (10).
- Disassemble the snap ring, then take off the tappet (10) and push rod (1).

3) Inspection

- If the check valve is damaged or scored on its seat face, replace it with a new one.
- Inspect the piston and tappet for damage.
- Replace the push rod if excessively worn, and replace together with the pump housing if required. The inspection for wear should be performed in the same procedure as for suction pressure test described below.

https://truckmanualshub.com/

4) Reassembly

Reassembly operation is performed in reverse order of disassembly. All the gaskets must be replaced with new ones at reassembly.

5) Testing

(1) Suction capacity test

Connect one end of a hose to the inlet side of the feed pump and immerse the other end of it into the fuel tank as illustrated.

Hold the feed pump in position about 1 m above the level of fuel in the fuel tank.

Operate the tappet at the rate of 100 rpm and check to see if fuel is drawn in and delivered for 40 seconds or so.

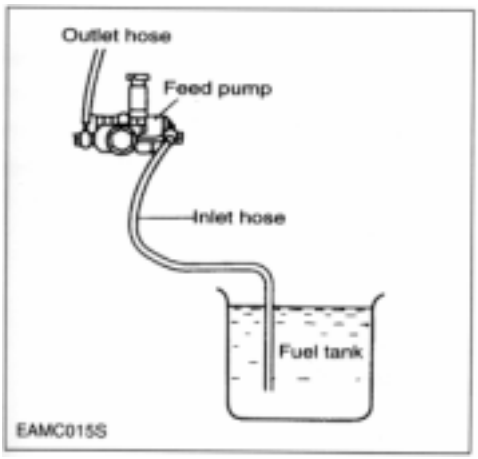

(2) Delivery test

Make a test with the feed pump mounted on a pump tester as illustrated. Operate the pump at the rate of 1,000 rpm and check to see if the pump delivery is more than 405 cc/15 seconds.

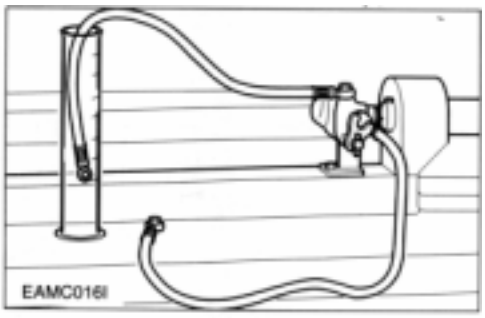

(3) Sealing test

Plug up the delivery port on the feed pump and apply compressed air of 2 kg/cm^2 into the inlet side.

Submerge the feed pump in a container of diesel fuel and check for air leak.

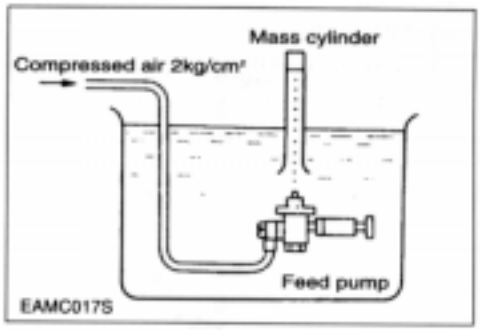

https://truckmanualshub.com/

4.3.5. Injection nozzle

1) General descriptions

Pressurized fuel delivered from the fuel injection pump is sprayed into the combustion chamber past the injection nozzle at proper spray pressure and spray angle, then burnt completely to achieve effective engine performance.

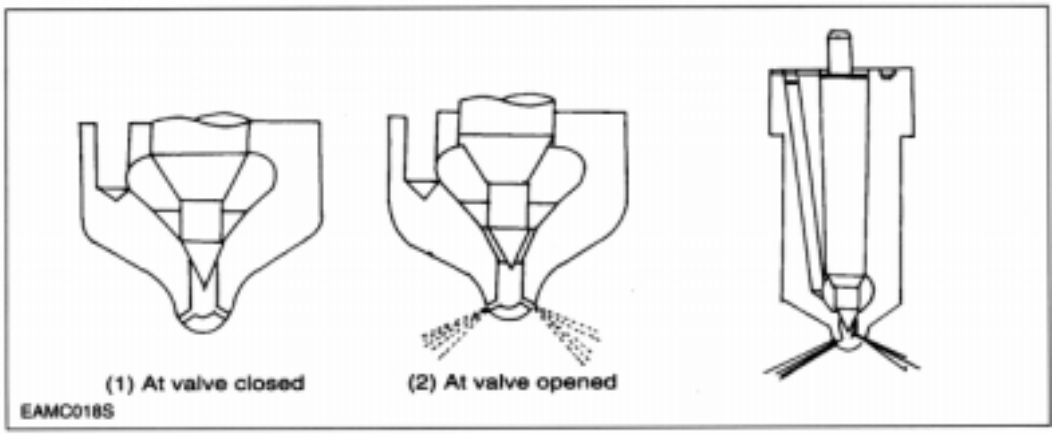

2) Construction

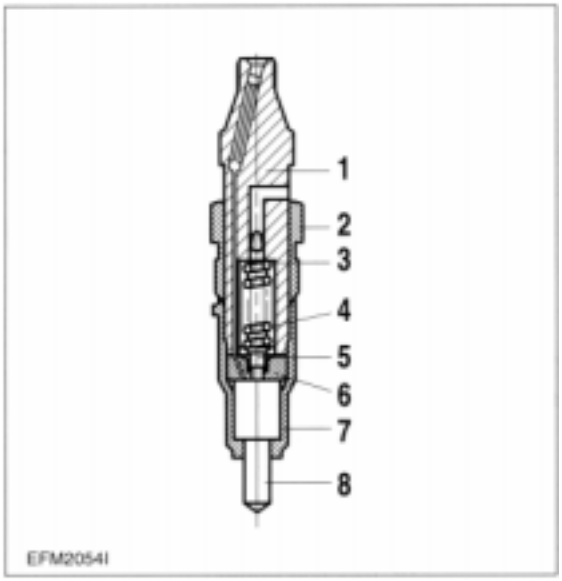

1. Nozzle holder
2. Union nut
3. Shim
4. Spring
5. Guide bush
6. Intermediate washer
7. Cap nut
7. Nozzle ass`y

3) Disassembly

- Clamp the nozzle assembly and remove the nozzle holder.
- Remove the nozzle nut and components inside.

4) Inspection

- Visually inspect the disassembled components for damage.

https://truckmanualshub.com/

5) Reassembly

- After removing carbon deposit, submerge the nozzle in diesel oil and clean it.
- Replace all the seal rings with new ones.
- Assemble the parts and tighten them to specified torque.

6) Adjustment

- After reassembly, install the nozzle on a tester.
- With the adjusting screw loosened, operate the nozzle 2 ~ 3 times to bleed it.
- Operate the nozzle tester lever at the specified rate.
- Adjust the injection pressure to the standard pressure by spring tension shims.
- After adjusting the injection pressure, tighten the cap nut to specified torque.
- Re-check the injection pressure and see if the spray pattern is normal. Spray pattern should be uniform and free of spattering.

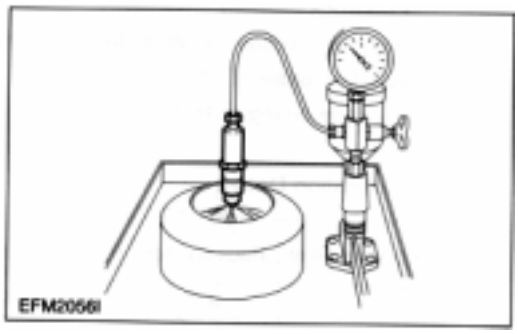

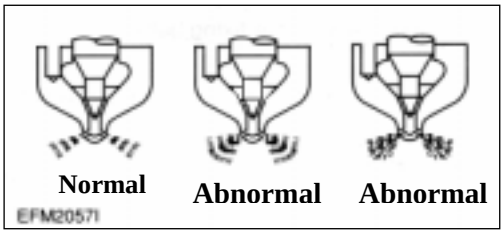

7) Testing

With the nozzle assembled to a nozzle tester and specified pressure applied, check the nozzle for fuel leakage.

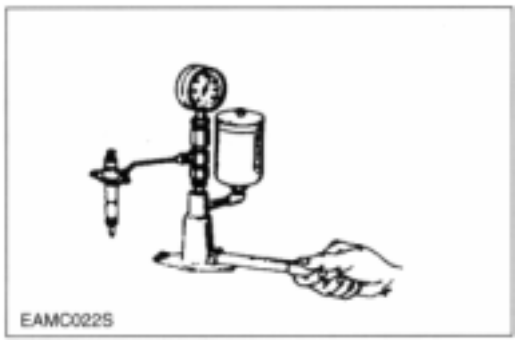

Engine Model	D1146	D1146TI	DE08TIS
Opening pressure	210 kg/cm^2	214 kg/cm^2	1st : 160 kg/cm^2 2nd : 220 kg/cm^2

https://truckmanualshub.com/

4.3.6. Diagnostics and troubleshooting

Complaints	Possible causes	Corrections
1. Engine won't start		
1) Fuel not being pumped out from feed pump	① Fuel pipes clogged or air into pipe fine	Correct
	② Feed pump valve defective	Replace
	③ Feed pump piston or Push rod sticking	Disassemble, correct
2) Fuel not being injected from injection pump	① Fuel filter element restricted	Clean
	② Air in fuel filter or injection pump	Bleed
	③ Plunger and/or delivery valve sticking or defective	Disassemble, correct
3) Fuel injection timing Incorrect	① Injection pump not properly installed on pump bracket	Check, correct
	② Injection pump tappet incorrectly adjusted	Check, correct
	③ Cams on cam shaft worn excessively	Replace
4) Injection nozzles inoperative	① Needle valves sticking	Correct or replace
	② Fuel leaking past clearance between nozzle and needle valve	Correct or replace
	③ injection pressure incorrect	Adjust
2. Engine starts but stalls immediately	① Pipe from feed pump to injection pump clogged or filter clogged	Clean
	② Air in fuel	Bleed
	③ Feed pump delivery insufficient	Disassemble, correct
	④ Fuel delivery insufficient due to clogging of fuel tank air breather	Replace breather
3. Engine lacks power	① Plunger worn excessively	Replace
	② Injection timing incorrect	Adjust
	③ Delivery valves defective	Replace
	④ Nozzle leaks excessively	Correct or replace
	⑤ Nozzle not working normally	Disassemble, correct
4. Engine knocking	① Injection timing too fast	Adjust
	② Nozzle injection pressure too high	Adjust
	③ Nozzles not working normally	Disassemble, correct
5. Engine knocks seriously producing excessive exhaust smoke	① Injection timing incorrect	Adjust
	② Nozzle injection pressure too low	Adjust
	③ Nozzle spring broken	Replace
	④ Nozzles not working normally	Replace
	⑤ Plungers worn excessively	Adjust
	⑥ Delivery valves seat defective	Replace
	⑦ Supply of fuel excessively	Check feed pump

https://truckmanualshub.com/

Complaints	Possible causes	Corrections
6. Engine output unstable	① supply of fuel insufficient	Check feed pump
	② Air in fuel	Bleed
	③ Water in fuel	Replace fuel
	④ Operation of plungers unsmooth	Disassemble, correct
	⑤ Movement of control rack sluggish	Disassemble, correct
	⑥ Nozzles defective	Disassemble, correct
	⑦ Injection starting pressure of each barrel incorrect	Adjust
	⑧ Automatic timer defective	Disassemble, correct
7. Engine does not reach maximum speed	① Nozzles not working normally	Disassemble, correct
	② Governor defective	Disassemble, correct
8. Engine idling Unstable	① Movement of control rod sluggish	Disassemble, correct
	② Operation of plungers unsmooth	Disassemble, correct
	③ Control pinions not engaged with control rod correctly	Disassemble, correct

Printed in Jan. 2001 PS-MMA0415-E1A

https://truckmanualshub.com/

4.4. Turbocharger (D1146TI, DE08TIS)

4.4.1. Main data and specifications

1) Main data and specifications

Specification		D1146TI	DE08TIS	
			225PS	240PS
Turbocharger Model		Allied Signal 466721-12	HOLSET WH1E-8284AX/H14EC8	
at maximum output	Air pressure at compressor outlet	1.26 kg/cm^2	1.33 kg/cm^2	1.40 kg/cm^2
	Air suction volume	16.8 m^3/min	18.0 m^3/min	18.4 m^3/min
	Speed of turbine revolution	102,800 rpm	98,200 rpm	99,840 rpm
Maximum allowable speed		126,150 rpm	127,660 rpm	
Max. allowable temperature of exhaust gas at turbine inlet		750 °C	720 °C	
Lubricating system		External oil supply	External oil supply	
Weight		9.5 kg	14.4 kg	

2) Construction

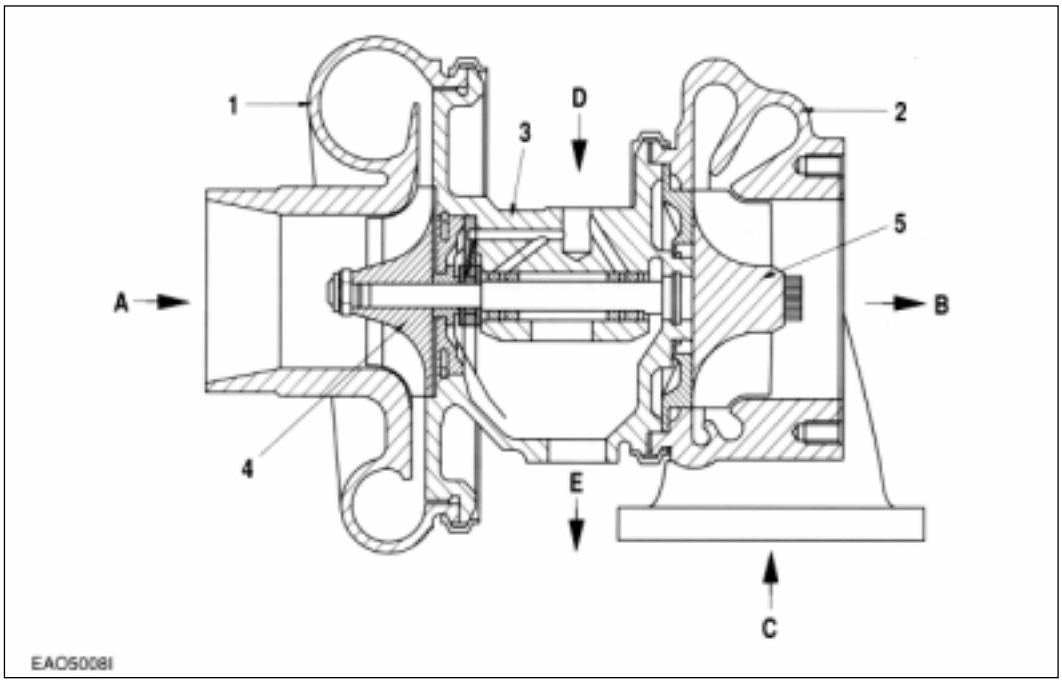

1. Impeller casing
2. Turbine casing
3. Bearing casing
4. Impeller
5. Turbine

A. Air inlet
B. Gas outlet
C. Gas inlet
D. Oil supply
E. Oil return

https://truckmanualshub.com/

3) Construction

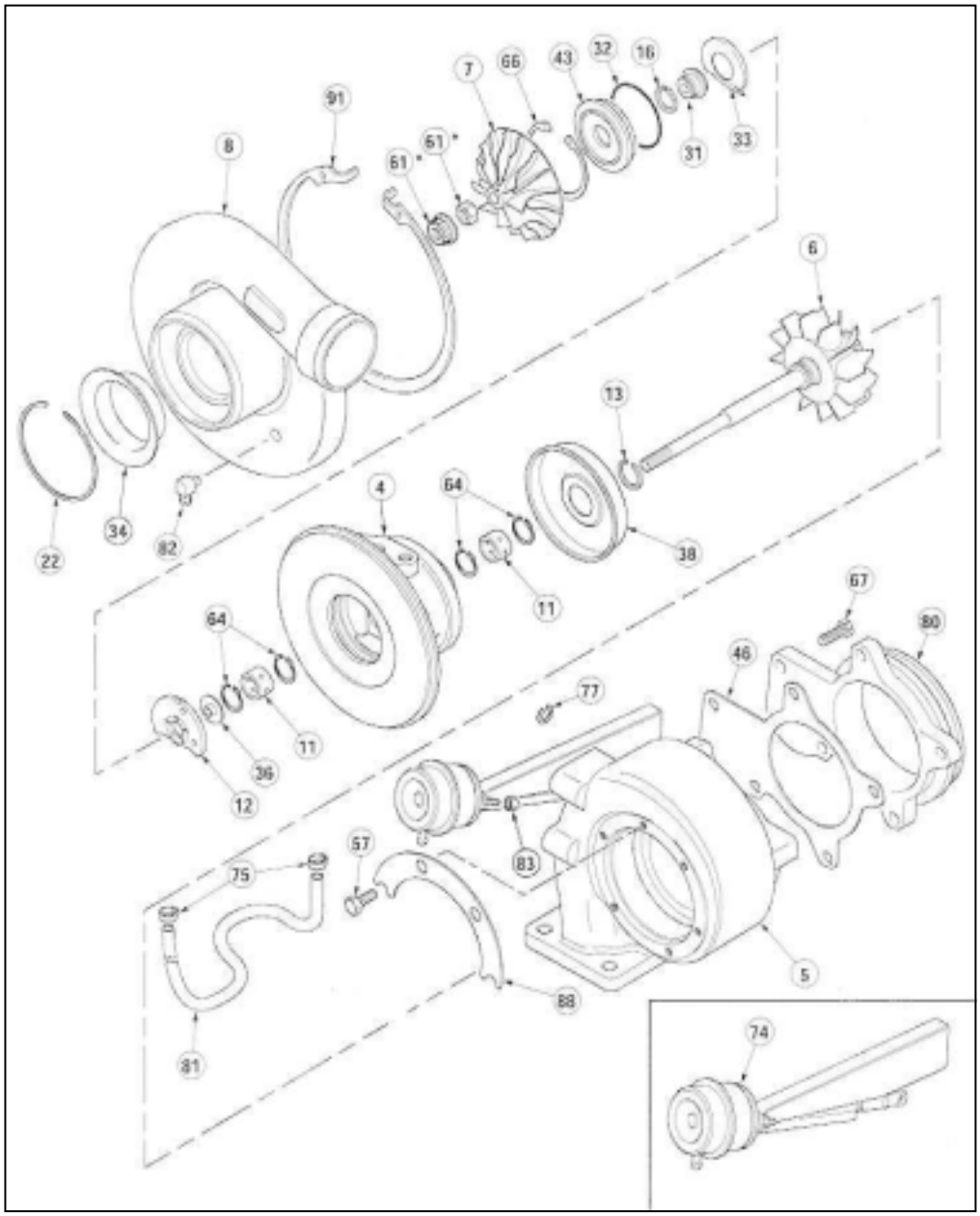

4	Bearing housing	32	O-ring	67	Hex bolt
5	Turbine housing	33	Oil baffle	74	Actuator ass`y
6	Turbine wheel ass`y	34	Inlet baffle	75	Hose clamp
7	Compressor wheel	36	Thrust collar	77	Actuator clip
8	Compressor housing	38	Heat protector cover	80	Cover plate
11	Journal bearing	43	Oil seal plate	81	Hose
12	Thrust bearing	46	Gasket	82	Elbow
13	Piston ring seal(turbine)	57	Hex bolt	83	Hex nut
16	Piston ring seal	61	Lock nut	88	Clamp plate
22	Retainer ring	64	Snap ring	91	Retaining ring
31	Oil stopper				

https://truckmanualshub.com/

3) Operating principle

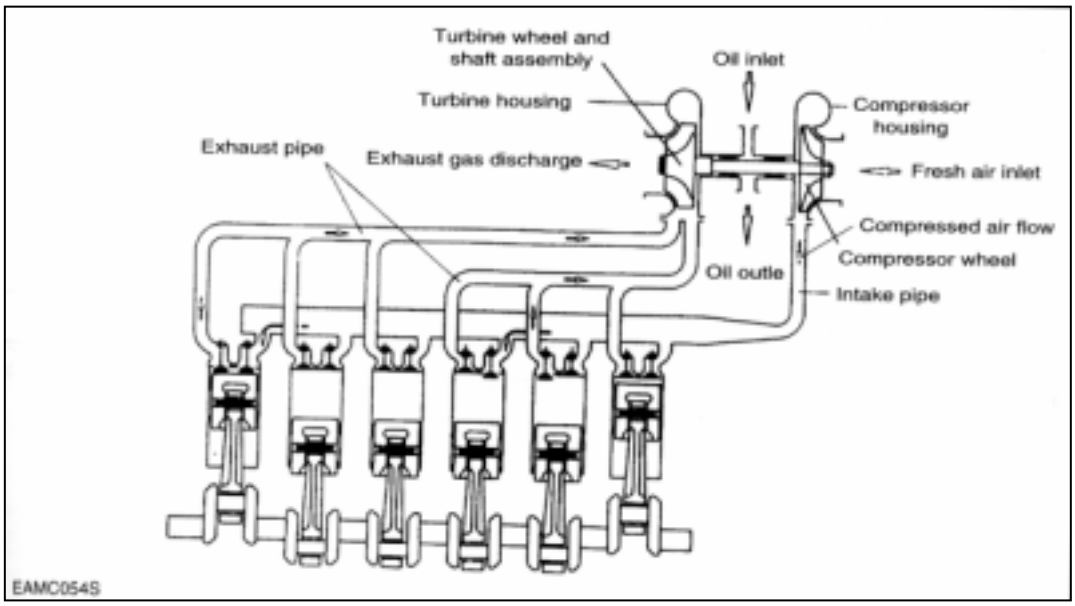

The turbocharger is a system designed to make use of the engine exhaust gas energy to charge high-density air into the cylinders, thereby to increase the engine output.

4.4.2. General descriptions

The engine output is determined by the fuel delivery volume and engine efficiency.

To burn the supplied fuel completely to change into effective power for the engine, the volume of air enough to burn the fuel completely should be supplied into the cylinders.

Therefore, the engine output is determined substantially by the cylinder capacity, and a greater volume of compressed air is charged into cylinders of given capacity, the greater engine output can be obtained as a greater volume of air charged into the cylinders burns so much more fuel.

As explained, the compressing of air to supply into the cylinders is called "Supercharging" and the making use of the energy of exhaust gas discharged from the combustion chamber to charge the compressed air into the cylinders is called "Turbocharging".

https://truckmanualshub.com/

4.4.3. Functions

1) Turbine

Exhaust gas discharged from the combustion chamber distributes its own energy to the turbine blades while passing the inside of the turbine housing, with the result that the turbine shaft can get rotating force. This is the operating principle of 'turbine', which is mounted with seal rings and heat protector to prevent exhaust gas from affecting the bearings adversely.

2) Compressor

The compressor, which is connected to the turbine over the one and same shaft to form a rotating body, takes in and compresses ambient air with rotating force transmitted from the turbine shaft. Then, the compressed air is delivered to the intake stake. This is the operating principle of the compressor.

3) Bearings

(1) Thrust bearing

The turbine wheel creates thrust force. Therefore, exercise care so that the shaft is not deviated from its the original position due to this thrust.

(2) Journal bearing

This journal bearing of floating type forms a dual oil film on both the inside and outside of the bearing so that the bearing can rotate independently. As the dual oil film plays a role as a damper, the sliding speed of the bearing surface becomes lower than the rotating speed of the shaft, resulting in assurance of stability in its movement.

4) Sealing-Compressor shaft

The compressor is of a dual construction type composed of seal plate and seal ring to prevent the leak of compressed air or lubricating oil.

https://truckmanualshub.com/

4.4.4. Precautions for operation

1) Precautions for operation of engine

The following precautions should be observed when starting, operating, or stopping the engine:

Operations	Precautions	Reasons
When starting the engine	1) Check oil level 2) Crank the engine with starter to check the increase in oil pressure(until the needle of pressure gauge starts to move or pressure indicator lamp is actuated) before starting the engine. 3) When having replaced oil, oil filter element, or lubricating parts, or when having stopped the engine for extended period of time, or in a cold place, loosen the oil pipe connections and operate the starter motor until oil is discharged. After completing the operation, be sure to retighten the oil pipe connections portion before starting the engine.	2) Abrupt starting of the engine causes the engine to rotate with oil not being distributed not only to each part but also to the turbocharger, resulting in abnormal wear or seizure on the bearing due to insufficient supply of oil. 3) In the case of the engine stopped for extended time or in a cold place, oil fluidity within the pipes can be deteriorated
Immediately after starting	1) Run the engine at idle for 5 minutes after starting off. 2) Check each part for leakage of oil, gas, and air, and take proper measure.	1) Applying load abruptly If load is abruptly applied with the engine and turbocharger rotating unsmoothly, such parts that a sufficient amount of oil has not reached can be seized up. 2) Leakage of oil, gas, and air (especially, oil leak) causes drop in oil pressure and loss of oil results in seizure of the bearing.
During operation	Check the followings: 1) Oil pressure At idle: 0.8 kg/cm^2 or more At full load: 3.0 4.8 kg/cm^2 2) If unusual sound or vibration is heard or felt, reduce engine revolutions slowly and locate the cause.	1) Excessively low oil pressure causes unusual wear or seizure of the bearing. Too high pressure causes oil leakage. 2) The engine Is operated continuously with unusual sound or vibration not corrected, it can be damaged beyond repair.
When stopping the engine	1) Run the engine at idle for 5 minutes before stopping.	1) If the engine is put to a stop after being operated at high load, heat from the red-hot turbine blades is transmitted to the bearing portion and burns oil to cause seizure of the bearing metal and rotating shaft.

https://truckmanualshub.com/

4.4.5. Walk-around check and servicing

As the condition of turbocharger depends greatly on how well the engine is serviced, it is very important to maintain the engine in accordance with the specified maintenance procedure.

1) Intake system

Pay particular attention to the air cleaner when servicing the intake system.

In the case of wet-type air cleaner, if the level of oil surface is lower than specified, cleaning effect is poor; if too high, the cleaner draws in oil to foul the case.

Especially, if the rotor is fouled, the sophisticatedly-tuned balance is broken to create vibration and to cause seizure and unusual wear to the bearing.

Therefore, it is very important to use a good quality air cleaner all the time.

In the case of dry-type air cleaner, it is essential to clean it to reduce intake resistance as much as possible.

2) Exhaust system

Pay particular attention to prevent gas leaks and seizure when servicing the exhaust system because leakage of exhaust gas from discharge pipes, turbocharger fixing portions, etc. lowers charging effect.

As such components as turbine chamber that becomes red-hot during operation use heat resisting steel nuts, do not interchange these nuts with ordinary steel nuts. In addition, apply anti-seizure coating to fixing nuts on the portions as designated.

3) Fuel system

If the full load stopper regulating the maximum injection volume and the maximum speed stopper regulating the maximum speed in the fuel injection pump are adjusted without using a pump tester, the turbocharger rotates at excessively rapid speed and may suffer damage.

Besides of it, if spray pattern from the fuel injection nozzles is bad or the injection timing is incorrect, temperature of exhaust gas rises up to affect the turbocharger adversely. To avoid such trouble, be sure to make a nozzle test.

4) Lubricating system

Pay particular attention to oil quality and oil filter change intervals when servicing the lubricating system. Deteriorated engine oil affects adversely not only the engine but torso the turbocharger. Suggested engine oils for the turbocharger-mounted engine are as follows:

https://truckmanualshub.com/

Engine model	Recommend oil		Sulfated ash content
	SAE No.	API No.	
D1146 D1146TI	SAE 15W40	above CD or CE	-
DE08TIS	SAE15W40 SAE10W40	ACEA-E2 or ACEA-E3 (API CH-4)	Bellow 0.5 %

* If long oil change intervals are to be used, ACEA-E3 oil must be used.

4.4.6. Periodical checking and servicing

Make it a rule to check the turbocharger assembly for condition and contamination periodically.

1) Guide for checking the rotor for rotating condition

The inspection of the rotor assembly for rotating condition should be performed by the degree of unusual sound. If a sound detecting bar is used, install its tip on the turbocharger housing and increase the engine revolutions slowly. If a high-pitch sound is heard continuously, it means that the rotor assembly is not normal. In this case, as the metal bearing and rotor are likely to be in abnormal conditions, the turbocharger should be replaced or repaired.

2) Guide for checking rotor end play

Disassemble the turbocharger from the engine, then check the rotor axial play and radial play.

When disassembling the turbocharger, be sure to plug the oil inlet and outlet ports with taps, etc.

(1) Rotor axial play

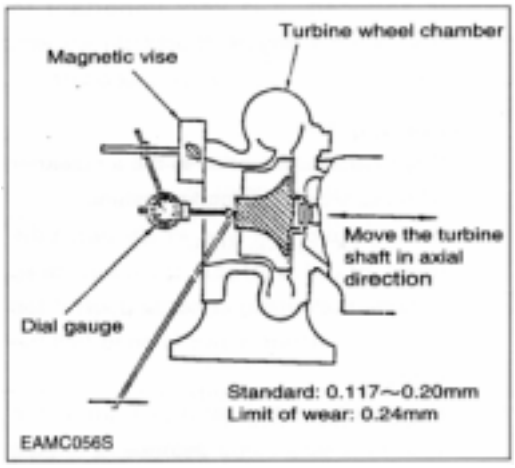

https://truckmanualshub.com/

(2) Rotor radial play

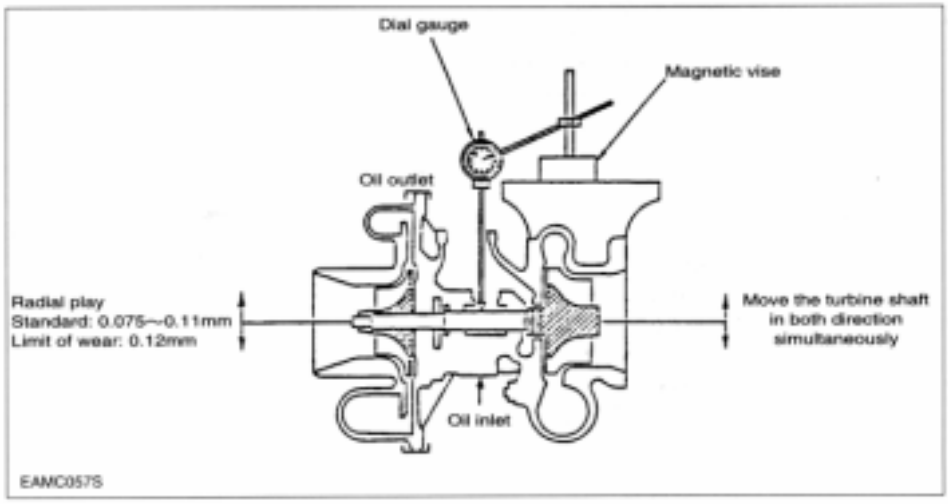

(3) If the measured axial and radial plays are beyond the limit of wear, replace or repair the turbocharger.

3) Guide for disassembling/cleaning and checking the turbocharger

First, disassemble the turbocharger from the engine and clean/check it with the oil inlet and outlet plugged with tape and so on.

4) Precautions for reassembling the turbocharger onto the engine

For reassembly of the turbocharger or handling it after reassembly operation, be sure to observe the following precautions:

Especially, exercise extreme care to prevent foreign matters from entering the inside of the turbocharger.

(1) Lubricating system

- Before reassembling the turbocharger onto the engine, inject new oil in the oil inlet port and lubricate the journal and thrust bearings by rotating them with hand .
- Clean not only the pipes installed between the engine and oil inlet port but also the oil outlet pipe and check them for damage or foreign matters.
- Assemble each joint on oil pipes securely to prevent oil leaks.

https://truckmanualshub.com/

(2) Intake system

- Check the inside of the intake system for foreign matters.
- Assemble each joint on the intake duct and air cleaner securely to prevent air leaks.

(3) Exhaust system

- Check the inside of the exhaust system for foreign matters.
- Be sure to use heat resisting steel bolts and nuts. Do not interchange them with ordinary steel bolts and nuts when performing reassembly operation. Apply anti-seizure coating to the bolts and nuts.
- Assemble each joint on the exhaust pipes securely to prevent gas leaks.

4.4.7. Diagnostics and troubleshooting

Complaints	Possible causes	Corrections
1. Excessive black smoke	1) Air cleaner element clogged	Replace or clean
	2) Restrictions in air duct	Check and correct
	3) Leakage at intake manifold	Check and correct
	4) Turbocharger seized up and not rotating	Disassemble/repair or replace
	5) Turbine blades and compressor blades coming in contact with each other or damaged	Disassemble/repair or replace
	6) Exhaust piping deformed or clogged	Check and correct
2. Excessive white smoke	1) Oil leak into turbine and compressor	Disassemble/repair or replace
	2) Worn or damaged seal ring due to excessive wear of bearing	Disassemble/repair or replace
3. Low engine output	1) Gas leak at each part of exhaust system	Check and correct
	2) Air cleaner element restricted	Replace or clean
	3) Turbocharger fouled or damaged	Disassemble/repair or replace
	4) Leakage at discharge port on compressor side	Check and correct
4. Unusual sound or vibration	1) Rotor assembly coming in contact	Disassemble/repair or replace
	2) Unbalanced rotation of rotor	Disassemble/repair or replace
	3) Seized up	Disassemble/repair or replace
	4) Each joint loosened	Check and correct

https://truckmanualshub.com/

5. Special Tool List

No.	Part No.	Figure	Tool Name	Remark
1	EF.123-014		Injection pump setting ass'y	D1146/TI
	EF.123-015			DE08TIS
2	EF.123-127		Oil seal insert ass'y (Front)	CR : made USA (up to 2000. Apr.)
	EF.123-173			NOK : made Japan (From 2000. may)
3	EF.123-043		Oil seal insert ass'y (Rear)	CR : made USA (up to 2000. Apr.)
	EF.123-184			NOK : made Japan (From 2000. may)
4	EF.123-052		Oil seal puller ass'y (Front)	
5	EF.123-048		Oil seal puller ass'y (Rear)	
6	EU.2-0530		Cylinder pressure tester adapter	
7	EU.123-086		Cylinder liner puller ass'y	
8	EF.123-179		Valve stem seal punch	
9	EU.2-0131		Valve clearance adjust ass'y	

https://truckmanualshub.com/

No.	Part No.	Figure	Tool Name	Remark
10	EF.123.-065		Valve spring press	
11	EU.2-0647	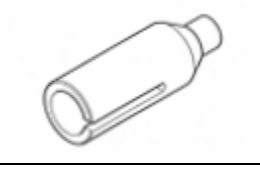	Crankshaft gear punch	
12	EF.123-064		Piston sleeve	D1146/TI DE08TIS
	EF.120-208			All engine
13	60.99901-0027		Feeler gauge	
14	T7610001E		Snap ring plier	
15	T7621010E		Piston ring plier	

https://truckmanualshub.com/

Appendix

● Tightening torque for major parts

Major Parts	Screw (Diameter x pitch)	Strength (grade)	Tightening Torque	Remarks
Cylinder head bolt	M14 x 1.5	10.9T	1st : 6.0 kg.m 2nd : 180。 3rd : 150。 (Angle method)	
Connecting rod bearing cap bolt	M14 x 1.5	12.9T	1st : 10 kg.m 2nd : 15 kg.m 3rd : 18 kg.m	
Crankshaft main bearing cap bolt	M16 x 1.5	12.9T	1st : 15 kg.m 2nd : 25 kg.m 3rd : 30 kg.m	
Balance weight fixing bolt	M12 x 1.5	10.9T	9.0 kg.m	
Flywheel housing fixing bolt	M14 x 1.5	10.9T	8.0 kg.m	
Flywheel fixing bolt	M14 x 1.5	10.9T	21.5 kg.m	
Crankshaft pulley fixing bolt	M12 x 1.5	10.9T	13.4 kg.m	
Oil spray nozzle	M14 x 1.5	-	7.0 kg.m	

● Tightening torque for fuel injection pump system

Major Parts	Screw (Diameter x pitch)	Strength (grade)	Tightening Torque	Remarks
Injection nozzle nut	M28 x 1.5	-	7.0 ± 0.5 kg.m	
Injecton pump bracket bolt	M10	8.8T	4.4 kg.m	
Injection pump coupling bolt	-	-	6.0 ~ 6.5 kg.m	
Injection pump driving gear nut	M24 x 1.5	8.8T	25.0 kg.m	
Injection pipe nut	M14 x 1.5	8.8T	3.0 kg.m	
Injection pump delivery valve holder	-	-	11.0 ~ 12.0 kg.m	

https://truckmanualshub.com/

● Standard bolt tightening torque table

Refer to the following table for bolts other then described above

Diameter x pitch (mm)	Degree of strength										
	3.6	4.6	4.8	5.6	5.8	6.6	6.8	6.9	8.8	10.9	12.9
	(4A)	(4D)	(4S)	(5D)	(5S)	(6D)	(6S)	(6G)	(8G)	(10K)	(12K)
	Limit value for elasticity (kg/mm^2)										
	20	24	32	30	40	36	48	54	64	90	108
	Tightening torque (kg.m)										
M5	0.15	0.16	0.25	0.22	0.31	0.28	0.43	0.48	0.5	0.75	0.9
M6	0.28	0.30	0.45	0.4	0.55	0.47	0.77	0.85	0.9	1.25	0.5
M7	0.43	0.46	0.7	0.63	0.83	0.78	1.2	1.3	1.4	1.95	2.35
M8	0.7	0.75	1.1	1	1.4	1.25	1.9	2.1	2.2	3.1	3.8
M8x1	0.73	0.8	1.2	1.1	1.5	1.34	2.1	2.3	2.4	3.35	4.1
M10	1.35	1.4	2.2	1.9	2.7	2.35	3.7	4.2	4.4	6.2	7.4
M10x1	1.5	1.6	2.5	2.1	3.1	2.8	4.3	4.9	5	7	8.4
M12	2.4	2.5	3.7	3.3	4.7	4.2	6.3	7.2	7.5	10.5	12.5
M12x1.5	2.55	2.7	4	3.5	5	4.6	6.8	7.7	8	11.2	13.4
M14	3.7	3.9	6	5.2	7.5	7	10	11.5	12	17	20
M14x1.5	4.1	4.3	6.6	5.7	8.3	7.5	11.1	12.5	13	18.5	22
M16	5.6	6	9	8	11.5	10.5	17.9	18.5	18	26	31
M16x1.5	6.2	6.5	9.7	8.6	12.5	11.3	17	19.5	20	28	33
M18	7.8	8.3	12.5	11	16	14.5	21	24.2	25	36	43
M18x1.5	9.1	9.5	14.5	12.5	18.5	16.7	24.5	27.5	28	41	49
M20	11.5	12	18	16	22	19	31.5	35	36	51	60
M20x1.5	12.8	13.5	20.5	18	25	22.5	35	39.5	41	58	68
M22	15.5	16	24.5	21	30	26	42	46	49	67	75
M22x1.5	17	18.5	28	24	34	29	47	52	56	75	85
M24	20.5	21.5	33	27	40	34	55	58	63	82	92
M24x1.5	23	25	37	31	45	38	61	67	74	93	103

Others :

1. The above torque rating have been determined to 70% or so of the limit value for bolt elasticity.
2. Tension is calculated by multiplying tensile strength by cross section of thread.
3. Special screws should be tightened to 85% or so of the standard value.
   For example, a screw coated with MoS_2 should be tightened to 60% or so of the standard value.

● Tightening torque for hollow screw(4-hole)

Material	M8	M10	M12	M14	M16	M18	M22	M26	M30	M38
SM25C	-	1.6	2.5	3.5	4.5	5.5	9.0	13.0	18.0	30.0
*SUM22L	0.8	1.8	3.0	4.0	5.5	6.5	11.0	16.0	20.0	35.0
STS304	0.8	1.8	3.0	4.0	5.5	6.5	11.0	16.0	20.0	35.0

★ : Adopted in DAEWOO engine

https://truckmanualshub.com/

● Maintenance specification table

Group	Part	Inspection Item		Stand value for assembly	Limit for use	Correction	Remark
Engine body	Cylinder block & liner	Inside diameter of cylinder liner for wear		ϕ111~ϕ111.022	ϕ111.122	Replace liner	Measure unworn portion beneath the rim of the upper side
		Amount of liner projection		0.03~0.08	-	Need amount of projection without fail	Projection difference between adjacent liners : 0.15↓
		The flatness of upper surface of cylinder block		0.05	-	Correct with a surface grinder	Referenced length : 200mm
		Hydraulic test for 1 minute (kg/cm^2)		4	-	Replace if leaky	
	Cylinder head & valve	Valve seat depression	Intake	0~0.3	0.55	Replace valve seat	
			Exhaust	0~0.3	0.55		
		Cylinder head height		109.9 ~110.1	108.4	Replace cyl. head	
		Hydraulic test for 1 minute (kg/cm^2)		4	-	Replace if leaky	Water temp. 70°C
Major moving parts	Piston	Outer dia. of piston		ϕ110.801~ϕ110.959		Replace liner	Measure at 13mm away from lower surface of piston
		Clearance between piston and liner		0.041~0.221	0.3	Replace one worn more	
		Width of piston ring grooves	Top ring	-	-	Replace piston if groove width is beyond specified value	
			2nd ring	3.06~3.08	-		
			Oil ring	4.04~4.06	-		
		Piston projection from cylinder block upper surface		0~0.12		Must exist	Measure unworn portion beneath the rim of the upper side
		Permissible weight difference of each piston		±15 g	96 g↓	Replace piston	
	Piston ring	Piston ring gap	Top ring	0.40~0.60	1.5	Replace ring	Standard gauge inside diameter : ϕ108
			2nd ring	0.40~0.60	1.5		
			Oil ring	0.30~0.50	1.5		
		Piston ring side clearance	Top ring	-	-	Replace ring or piston	Limit for use is if for standard clearance
			2nd ring	0.07~0.102	0.15		
			Oil ring	0.05~0.085	0.15		
		Direction of ring gap		-	-	Cross Install by 120°	
	Piston pin	Outer diameter of piston pin		ϕ41.994 ~ ϕ42	ϕ41.94	Replace piston pin	
		Clearance between piston pin and its bush		0.003~0.015	0.08	Replace one worn more	

https://truckmanualshub.com/

Group	Part	Inspection Item	Stand value for assembly	Limit for use	Correction	Remark
Major moving parts	Crank shaft	Radial run-out of journal and pin	-	0.01	Correct with a grinder	Measure In horizontal and vertical directions (against axial direction)
		Outside diameter of journal	ϕ83.966~ϕ83.988	ϕ83	Use under sized bearings respectively (0.25, 0.5, 0.75, 1.0)	
		Outside diameter of pin	ϕ70.971~ϕ70.990	ϕ70		
		Ellipticity of journal and pin	0.008	0.025		
		Concentricity of journal and pin	0.01	0.03		
		Taper of journal and pin	0.02	0.03		
		Clearance between crankshaft and bearing	0.052~0.122	0.25	Replace bearings	Measure at crown part not parting line
		End play of crankshaft	0.15~0.325	0.5	Replace thrust bearing	
		Run-out of crankshaft	0.06	0.1 ↓	Adjust by a press if bended	Measure at No.4 bearing (No. 1 & 7 bearing supported)
		Balance of crankshaft (g.cm)	60 ↓	60 or less	Check dynamic balance	Measure at 400 rpm
		Torque value journal bearing cap bolt (kg.m)	30	-	Coat the bolt with engine oil	Clean out foreign objects on joining surface
		Crush height of journal bearing	0.08~0.110	-		Measure after tightening metal cap and releasing one stud
		Oil seal for wear(crank shaft rear)	-	-	Replace oil seal if oil leaking	
	Connecting rod	End play of con-rod	0.170 ~ 0.248	0.50	Replace con-rod	
		Clearance between con-rod bearing and crank pin	0.034 ~ 0.098	0.25	Replace bearing	
		Clearance between small end bush & piston pin	0.050~0.081	0.12		
		Crush height of con-rod bearing	0.04~0.07	-		Measure after installing the bearing and releasing one bolt
		Side clearance of big-end and small-end	-	0.50	Replace con-rod	
		Allowable weight difference per con-rods	30 g ↓	-		
		Torque value of con-rod bearing cap bolt (kg.m)	18	-	Coat the bolt with engine oil	Clean out foreign objects on joining surface
	Cam shaft	Diameter of cam shaft journal	ϕ57.86~ϕ57.88	ϕ57.52		
		Clearance between cam shaft and cam bush	0.12~0.17	0.24	Replace cam bush	
		End play of camshaft	0.28~0.43	0.6	Replace thrust washer	
		Run-out of camshaft	0.05	0.2	Correct or replace the cam shaft	
	Timing gear	Clearance between idle shaft bush and idle shaft	0.025~0.091	0.15		
		End play of idle gear shaft	0.043~0.167	0.3	Replace thrust collar	
		Back-lash between gears(cam, idle, crank and injection pump)	0.16~0.28	0.35	Correct or replace gear	

https://truckmanualshub.com/

Group	Part	Inspection Item			Stand value for assembly	Limit for use	Correction	Remark
Valve system	Valve	Diameter of intake valve stem			ϕ8.950~ϕ8.970	ϕ8.93	Replace Valve & valve guide	When replacing valve, replace valve guide alike
		Diameter of exhaust valve stem			ϕ8.935~ϕ8.955	ϕ8.91		
		Clearance between valve stem and valve guide	Intake		0.030~0.065	0.15	Replace valve or valve guide	Replace one worn more
			Exhaust		0.045~0.080	0.15		
		Thickness of valve head	Intake		2.7	Max. 1	Replace valve	
			Exhaust		2.2			
		Clearance between valve guide and valve spring seat	Intake		2.0	-		
			Exhaust		2.0	-		
		Clearance between valve guide and cyl. head installing hole			-0.039~-0.010 (Press fit)			Spread oil over valve guide and press it into the hole
		Concentricity between valve stem and valve head			0.05			Without spring seat
		Intake valve spring	Free length (mm)		Approx. 64	-	Replace valve spring	
			Tension force (when pressed to 41mm)kg		67~73	66.5		
			Squareness (along free length direction)		1.5°	-		
		Exhaust valve spring	Inner	Free length (mm)	D1146/TI : 60 DE08TIS : 73.8	-	Replace valve spring	
				Tension force(when pressed to 38mm)kg	D1146/TI:26.9~30.3 DE08TIS : 36~40	-		
				Squreness (along free length direction)	1.5°	-		
			Outer	Free length	D1146/TI : 71 DE08TIS : 77.7	-	Replace valve spring	
				Tension force(when pressed to 41mm)kg	D1146/TI:62.7~69.3 DE08TIS : 71~79	-		
				Squreness (along free length direction)	1.5°	-		
		Valve clearance (at cold)	Intake		0.3	-	Adjust	
			Exhaust		0.3	-		
		Joining surface of valve stem and rocker arm bush			-	-	Grind or replace if severely pitted on tip of rocker arm and stem	
		Clearance between rocker arm shaft & rocker arm bush			0.040~0.113	0.2	Replace bush or shaft	
		Diameter of rocker arm shaft for wear			ϕ23.939~ϕ23.96	ϕ23.75	Replace	
		Run-out of push rod			-	0.3	Replace	

Printed in Jan. 2001 PS-MMA0415-E1A

https://truckmanualshub.com/

Group	Part	Inspection Item	Stand value for assembly	Limit for use	Correction	Remark
Valve system	Tappet	Clearance between tappet & tappet hole of cyl. block	0.035~0.077	0.15	Replace tappet	
		Diameter of tappet	ϕ19.944~ϕ19.965	-	Replace tappet	
		Tappet face in contact with cam	-	-	Replace if severely worn or deformed	
Lubricating system	Oil pressure	Oil pressure (at normal speed) kg/cm^2	4.8 or less	3.5	Check oil leakage and clearance between each part	
		Oil pressure (idling) kg/cm^2	0.8~1.4	0.6	Use recommended oil	
	Oil temperature	Max. permissible oil temperature °C	-	105		Must not exceed this value
		Permissible oil temperature in short time °C	-	120		
	Oil pump	Axial play of oil pump gear	0.055~0.105	-	Replace gear or cover	
		Clearance between gear shaft & oil pump cover hole	0.032~0.077	-		
		Clearance between drive gear shaft and cover hole	0.040~0.094	-	Replace bush or cover	
		Diameter of gear shaft	ϕ16.950~ϕ16.968		Replace gear shaft	ϕ17e7
		Diameter of driving gear bush	ϕ28.000~ϕ28.033		Replace bush	ϕ28e7
		Backlash: Between crank gear & idle gear	0.15~0.25	0.8	Adjust back-lash	
		Backlash: Between oil pump drive gear & idle gear	0.15~0.25	0.8		
	Valve opening pressure	Oil pressure control valve (kg/cm^2)	4.0 ~ 4.8	-	Replace valve	
		By-pass valve for filter element (kg/cm^2)	1.8 ~ 2.3	-		
		By-pass valve for full oil filter (kg/cm^2)	4.0 ~ 4.8	-		
		Relief valve for oil pump (kg/cm^2)	8.5 ~ 11.5	-	Replace valve	
		Spray nozzle control valve (kg/cm^2)	1.5 ~ 1.8	-		
	Oil filter	Damage of oil filter cartridge	-	-	Clean or replace	

https://truckmanualshub.com/

Group	Part	Inspection Item	Stand value for assembly	Limit For use	Correction	Remark
Cooling system	Radiator	Radiator & water pump for corrosion, damage & improper connecting	-	-	Correct or replace	
		Test for leakage (air pressure) (kg/cm^2)	1.0	-	Submerge in water and replace if air bubbles found	
		Pressure valve for opening pressure (kg/cm^2)	0.5	-		
		Negative pressure valve for opening pressure (mmHg)	20	-		
	Water pump	Delivery volume l/min - Engine speed 2,700rpm - Water temp. 80°C - Pressure : 0.8 kg/cm^2	280	-	Check the water passage	For any restrictions
		Clearance between impeller & housing	0.35	-	Replace if impeller & housing are damaged	
		Perpendicularity of pulley	0.3		Adjust by a bench press	
		Fan belt depression(with thumb) mm	Approx. 15	-	Adjust	
	Cooling water temp	Operating temperature (permissible temp.) °C	79~95	-	Must not exceed this value	
		Permissible temperature in a short time °C	-	105		
	Thermostat	Thermostat opening temp. °C (under atmospheric pressure)	79	-	Replace	Type –II - Opening temp. : 83°C - Full opening temp.: 95°C
		Full opening temp. °C	94	-	Replace if defective Stroke : min. 8mm	
Fuel system	Piping & others	Fuel pipe, injection pipe & nozzle holder for damage, cracks, improper packing, etc.	-	-	Repair or replace	
		Fuel filter cartridge for damage or dimple	-	-	Replace cartridge	
	Injection pressure of injection nozzle (kg/cm^2)		D1146 : 210 D1146TI : 214 DE08TIS: 1st 160 2nd 220	-	Adjust by shim	
	Operating pressure of overflow valve (kg/cm^2)		1.0~1.5	-	Replace valve	
	Projection height of nozzle from the cyl. head surface(mm)		2.53	-	Replace seal ring	
Inspection at completion	Running-in the engine		-	-	Refer to supplement “running-in”	
	Cylinder pressure	Compression pressure of cylinder (kg/cm^2)	24 ~ 28	24 or more	Correct	at 200rpm or more (20°C)
		Compression pressure difference of each cylinder	±10% or less against average		Correct	

- **WORLDWIDE NETWORK**

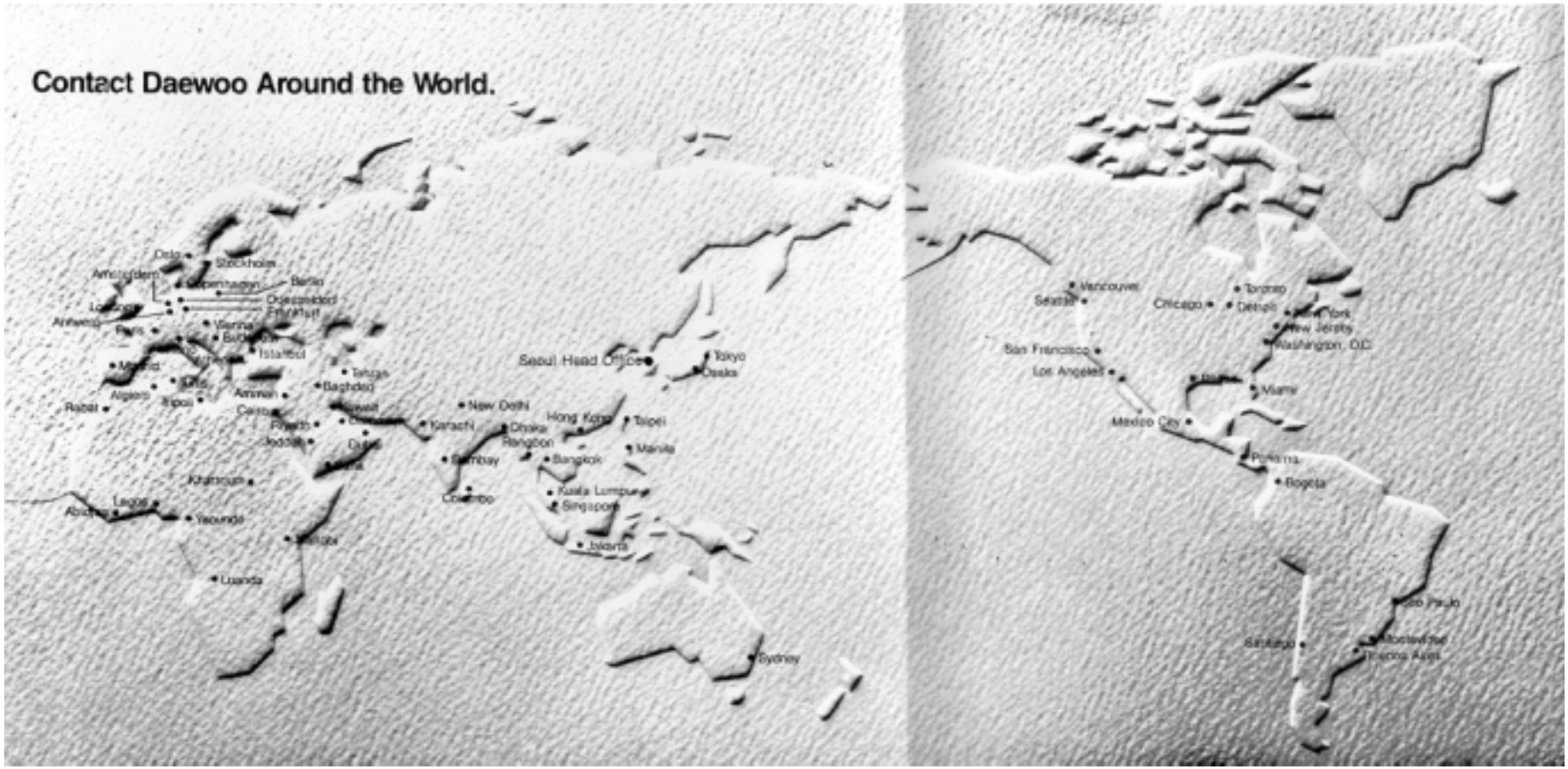

https://truckmanualshub.com/

Overseas Subsidiaries

Daewoo International (America) Corporation 100 Daewoo Place, Carlstadt, New Jersey 07072, U.S.A. Tel: (201) 935-8700 Tlx: 133563 DAEWOO CARL Fax: (201) 935-6491

Daewoo Electronics Corp. of America 100 Daewoo Place, Carlstadt, New Jersey 07072, U.S.A. Tel: (201) 935-8700 Tlx: 133563 DAEWOO CARL Fax: (201) 935-6491

Daewoo Canada Ltd. 180 Duncan Mill Road, Suite 507, Don Mills, Ontario, M3B 1Z6 Canada Tel: (416) 449-0554 Tlx: 06-966508 DAEWOO TOR Fax: (416) 449-7819

Daewoo International (Panama) S.A. Calle Elvira Mendez Y Via Espana Edif. Banco De Boston 4TO Piso Aptdo. 6-2240 El Dorado Panama, Rep. of Panama Tel: 23-8144/0394 Tlx: 370-2580 DAEWOO PG

Daewoo Handels GmbH Hahnstrasse 31-35, 71-Niederrad, Postfach 71 02 54, 6000 Frankfurt/M. West Germany Tel: (069) 664040 Tlx: 414957 DAEWOO D Fax: (069) 6640412

Daewoo U.K. Ltd. Templar House, 82 Northolt Road, South Harrow, Middlesex HA2 OYL, London, United Kingdom Tel: (01) 423-7200 Tlx: 932241 DAEWOO G Fax: 01-864-6070

Daewoo France S.A.R.L. Centre Seine T41, 23, Rue Linois, 75015 Paris, France Tel: (1) 4575-1530, Tlx: 250837 DAEWOO F Fax: (1) 45. 77. 49. 34

Universal Refining N.V. 4DE Havendok, Kaal 279B-2030 Antwerpen, Belgium Tel: (03) 5413600 Tlx: 71487 UNIREF (Marketing Dept), 71495 UNIDAE (Other Dept) Fax: (03) 5412914

Daewoo H.K. Ltd. 33/F Far East Finance Centre, 16 Harcourt Road, Hong Kong Tel: 5-200826/30 Tlx: 75274 DWHKG HX Fax: (05) 8610896

Daewoo Malaysia SDN. BHD Suite 308, 3rd Floor, Pernas International, Jalan Sultan Ismail, 50250 Kuala Lumpur, Malaysia Tel: 03-2618033, 2618043, 2618045, 2618052, 2613049 Tlx: 30067 DAEWOO MA Fax: (03) 2615790

Daewoo International (Japan) Corporation Rm. 404, Toranomon Mitsu Bldg., 8-1, 3-Chome, Kasumigaseki, Chiyoda-Ku; Tokyo, Japan Tel: (03) 502-4301/8 Tlx: 222-6754 DWJPN J Cable: DAEWOOIND TOKYO Fax: (03) 502-4392

Int'l Tyre Mfg. & Distribution Co., Ltd. P.O. Box 754, Port Sudan, Sudan Tel: 4484/5 Khartoum Office: P.O. Box 607, Khartoum, Sudan Tel: 75232, 75633 Tlx: 22187 ITMD SD

Daewoo Nigeria Ltd. Plot 1608, Adeola Hopewell Street, Victoria Island, Lagos, Nigeria Tel: 617108/9 Tlx: 22143 DAEWOO NG Fax: (01) 61-6953

The Sudanese Korean Construction and Contracting Co., Ltd. Al Sabah Building Room No. 14, Block No. 1, Square 5 H Khartoum East, P.O. Box 1873, Khartoum, Sudan Tel: 56468, 54778, Tlx: 28058 DAEWOO SD

Cordata Technologies, Inc. 1055 W. Victoria Str., Compton, California 90220, U.S.A. Tel: (213) 603-2901 Tlx: 683-1818 DWA LA Fax: (213) 609-2265

ZyMOS Corporation 477, N. Mathilda Ave., Sunnyvale, California 94086 U.S.A. Tel: 408-730-5400, 408-730-8800 Tlx: TWX 910-339-9530 Fax: 408-730-5456 (Administration) 408-730-5473 (Sales & Mktg)

Istanbul
Daewoo Corp. Istanbul Branch
Cumhuriyet Caddesi, Merkez Apt.
No: 163, KAT-3
Elmadag-Istanbul, Turkey
Tel: 90-1-2305682-3
Tlx: 27703 DGVD TR Fax: 90-1-2468305

I.T.M.D
International Tyre Manufacturing & Distribution Co., Ltd.
P.O. Box 607, Khartoum, Sudan
Tel: 249-11-75633
Tlx: 22187 ITMD SD Fax: 249-11-75232

Jeddah
Al-Sab Care of Daewoo
P.O. Box 20057 CODE: 21455 Jeddah, Saudi Arabia
Tel: 966-2-6437108, 6445846
Tlx: 602153 KENASA SJ Fax: 966-2-6445846

Jakarta
Daewoo Corp. Jakarta Branch
Lippo Plaza 7th Fl.
Jl. Jendral Sudirman Kav. 25
Jakarta 12920, Indonesia P.O. Box 2810
Tel: 62-21-5204520
Tlx: 62710 DAEWOO IA Fax: 62-21-5203478

Kuwait
Bule Sea Co. (DAEWOO)
Fahed Al-Salem ST. Al-Anjan Bldg., 9th Floor
P.O. Box 26554, Safat 13126, Kuwait
Tel: 965-241-9491—4
Tlx: DAEWWUHA 44775KT Fax: 965-244-2339

Khartoum
Daewoo Corp. Khartoum Branch
Plot No. 21, Block 2, Mogran
P.O. Box 2736, Khartoum, Sudan
Tel: 249-11-71950
Tlx: 22887 DAEWO SD

Kuala Lumpur
Daewoo Malaysia SDN. BHD
Suite 308, 3rd Floor, Pernas International Bldg.
Jalan Sultan Ismail, 50250 Kuala Lumpur, Malaysia
Tel: 60-3-2618033
Tlx: DAEWOO MA30067 Fax: 60-3-2615790

Karachi
Daewoo Corp. Karachi Branch
10th Floor, Shaheen Complex Bldg.
M.R. Kayani Road, Karachi, Pakistan
Tel: 92-21-263-6171, 263-6644
Tlx: 24245 DWHKI PK Fax: 92-21-263-2574

Khaoarovsk
Daewoo Corp. Khabarovsk Branch
43 Dzerzhinsky ST. Room No.710
Khabarovsk, 680000, U.S.S.R
Tel: 7-421-38-8955, 8209, 33-1229
Tlx: 141159 DWKHV SU Fax: 7-421-33-1229

Los Angeles
Daewoo Int'l (America) Corp.
1055 W. Victoria ST.
Compton, California 90220, U.S.A.
Tel: 1-213-774-1746, 603-9697
Tlx: 683-1818 DWA LA
Fax: 1-213-637-0383 (General Administration)
1-213-603-0688 (Textile & General Merchandise)
1-213-637-8574 (CDP Steel)
1-213-603-9252 (Export & Projects)

London
Daewoo U.K. Ltd.
Templar House, 82 Northolt Road
South Harrow, Middlesex HA2 OYL, United Kingdom
Tel: 44-81-423-7200
Tlx: 932241 DAEWOO G Fax: 44-81-864-6070

Lagos
Daewoo Nigeria Ltd.
Plot 1608, Adeola Hopewell ST
Victoria Island
G.P.O. Box 8686, Lagos, Nigeria
Tel: 234-1-617108—9
Tlx: 22143, 21149 DAEWOO AN Fax: 234-1-616953

Luanda
Daewoo Corp. Luanda Branch
Rua Dr Alfredo Trony
Edificio Do B.P.A., 7 Andar
P.O. Box 5133 Luanda
R.P. Angola
Tel: 244-2-390532, 390533
Tlx: 4146 DAEWOO AN Fax: 244-2-390444

Johannesburg
Young Stanley (PTY) LTD.
6th Fl., Garden Plaze
27 Stiemens ST., Braafontein2001
Johannesburg, S. Africa
P.O. Box 30876 Braafontein 2017, S. Africa
Tel: 27-11-339-3087—8, 339-3068—9
Tlx: 4-27870 SA Fax: 27-11-403-1281

Miami
Daewoo Int'l (America) Corp.
8390 N. W. 53rd ST. Suite 312
Miami, Florida 33166, U.S.A.
Tel: 1-305-593-1406/1407
Tlx: 6811212 DWA MIA Fax: 1-305-593-9998

Mexico
Daewoo Mexico, S.A. De C.V.
Aristoteles No. 77-401-A
Col. Polanco 11560 Mexico D.F.
Tel: 52-5-255-1377, 1676, 5086, 5852
203-9559, 8599
Tlx: 1772303 DICLME Fax: 52-5-255-4883

Montevideo
Daewoo Corp. Montevideo Branch
(Sucursal De Montevideo)
Juncal 1335, APT. 1102
Montevideo, Uruguay
Tel: 598-2-96-2354, 2367
Tlx: 26594 DWMV UY Fax: 598-2-96-2370

Moscow
Daewoo Corp. Moscow Office
Degtyarny Perreulok 3(5th Floor)
103006, Moscow, U.S.S.R
Tel: 7-095-299-6582, 7948, 200-5218, 5220
Tlx: 413764 DWMOS SU Fax: 7-095-200-5238

Madrid
Daewoo Corp. Madrid Branch
(Suursal en Madrid)
Avda. De Burgos, 12 Planta 13A
28036 Madrid, Spain
Tel: 34-1-766-5922, 6400
Tlx: 45499 DWMD E Fax: 34-1-766-2697

Milano
Daewoo Italia S.R.L.
Centro Direzionale Colleoni
5 Piano, Piazzo Liocorno(A2)
Voe Paracelso 6
20041 Agrate Brianza(MI), Italy
Tel: 39-2-632481
Tlx: 333584 DAEWMI I Fax: 39-2-632489

Manila
Daewoo Corp. Manila Branch
4th Fl., Pacific Star Bldg.
Sen. Gil J. Puyat Avenue, Cor. Makati Avenue
Makati Metro Manila, Philippines
Tel: 63-2-818-1031/2, 817-4560
Tlx: 7584263 DAEWOO PU Fax: 63-2-817-5267

New Jersey
Daewoo Int'l (Americal Corp.
100 Daewoo Place
Carlstadt, New Jersey 07072, U.S.A.
Tel: 1-201-935-8700
Tlx: 133563 DAEWOO CARL Fax: 1-201-935-6491

New York
Daewoo Int'l (Americal Corp.
437 Madison Ave.
New York, N.Y. 10022, U.S.A.
Tel: 1-212-909-8200, 980-0919
Tlx: 233691 DAEWOO
DAEWOO 6801207 UW
Fax: 1-212-838-5366

Nairobi
Daewoo Corp. Nairobi Branch
City Hall Annex Bldg., 10th Floor
Mundi Mbingu ST., P.O. Box 43739, Nairobi, Kenya
Tel: 254-2-228686, 339395
Tlx: 22759 DAEWOO NBO Fax: 254-2-335174

New Delhi
Daewoo Corp. New Delhi Branch
Apartment 'A-4', Qutab Hotel
Off Sri Aurobindo Marg
New Delhi-110016, India
Tel: 91-11-6868689, 6851784
Tlx: 3173339 DWOO IN
3173379 DWOO IN
Fax: 91-11-6868842

Nagoya
Daewoo Int'l (Japan) Corp. Nagoya Branch
4th Fl., Daei Bldg., 11-20, Nishiki 1-Chome
Naka-Ku, Nagoya 460, Japan
Tel: 81-52-222-3717, 3718
Tlx: 4427578 DWNGY J Fax: 81-52-222-3719

Oslo
Daewoo Corp. Oslo Branch
Vollsveien 13 Granfos
Naeringspark Bldg. C
3rd Floor (P.O. Box 67)
1324 Lysaker, Norway
Tel: 42-2-535379
Tlx: 77679 DAWO N Fax: 47-2-533901

Osaka
Daewoo Int'l (Japan) Corp. Osaka Branch
Midosuji Mitsui Bldg., 10th Floor
1-3, 4-Chome, Bingomachi, Chuoh-Ku, Osaka, Japan
Tel: 81-6-222-0848—9, 201-3113—6
Tlx: MITUCHUN J63731 Fax: 81-6-222-0865

https://truckmanualshub.com/

Amsterdam
Daewoo Corp. Amsterdam Branch
Berghausgebouw 3N Koningin Wilhelminapleln 2-4
1062 HK, Amsterdam, Netherlands
Tel: 31-20-6178105
Tlx: 18714 DAEWOO NL Fax: 31-20-6178125

Antwerp
Universal Refining N.V.
4DE Havendok Kaai 279B-2030 Antwerpen, Belgium
Tel: 32-3-5413600
Tlx: 71487 UNIREF (MARKETING DEPT.)
71495 UNIDAE (OTHER DEPT.)
Fax: 32-3-5412914

Athens
Daewoo Corp. Athens Branch
Athens Tower B, Room 601
2-4, Mesogeion Ave., Athens 115 27, Greece
Tel: 30-1-775-3480, 777-5706
Tlx: 210528 DWOO GR Fax: 30-1-777-5706

Algier
Daewoo Corp. Algerie Branch
25, Rue D'anjou
Hydra, Algier/Algerie
Tel: 213-2-602060, 600364
Tlx: 65488 DWALG DZ Fax: 213-2-685972

Abidjan
Daewoo C.I.
01 B.P V135 Abidjan 01, Côte D'Ivoire
Villa No. 20, Rue Des Alizes
Marcory Residentel Abidjan, Côte D'Ivoire
Tel: 225-26-05-45
Tlx: 43454 DAEWOO CI

Amman
Daewoo Corp. Amman Branch
P.O. Box 927181 Amman, Jordan
Tel: 962-6-893835-4
Tlx: 21370 DAEWOO JO Fax: 962-6-886217

Bogota
Daewoo Corp. Bogota Branch
Cra 7 No. 32-33 Of. 1603/1604
Bogota, Colombia
Tel: 571-1-284-0204, 1885, 4007, 4012, 4086
Tlx: 42326 DWBOG CO Fax: 57-1-285-3594

Buenos Aires
Daewoo Corp. Buenos Aires Branch
San Jose 83 4th Floor, Rm 401-2
(1076) Capital Federal Buenos Aires
Argentina
Tel: 54-1-383-0191, 0037, 8830, 4750
Tlx: 17152 DWBA AR Fax: 54-1-814-3834

Budapest
Daewoo Corp. Budapest Branch
Budapest Bajcsy-ZS Ut 12
H-1051 Budapest, Bajcsy-Zsilinszky UT 12
ITC ■ Room 307, Hungary
Tel: 36-1-118-7183, 7237, 7436
Tlx: 223719 DWBUD H Fax: 36-1-118-7644

Brussels
Daewoo Corp. Bruxeu De Liaison
363, Avenue Louise, Bte 21
1050 Bruxelles, Belgium
Tel: 32-2-646-2384, 2512
Tlx: 20153 DWBXL B Fax: 32-2-647-9516

Belgrade
Daewoo Corp. Belgrade Branch
(Centro Coop) 304 Genex Apartment, Vladimira Popovica 6, Belgrade, Yugoslavia
Tel: 38-11-63-3749
Tlx: 12433 CEN YU Fax: 38-11-222-4597

Baghdad
Daewoo Corp. Baghdad Branch
118 Petra Hotel, Alwaiyah Saadoon ST
Baghdad, Iraq
Tel: 964-1-71-99035-7
Tlx: 212713 PETRA IK

Bangkok
Daewoo Corp. Bangkok Branch
Room 1201, Bangkok Bank Bldg.
333 Silom Road, Bangkok 10500, Thailand
Tel: 66-2-235-0844~7, 0688, 0698
Tlx: 82229 DAEWOO TH Fax: 66-2-236-4742

Bombay
Daewoo Corp. Bombay Branch
1105, Maker Chamber V
Nariman Point, Bombay-400 021, India
Tel: 91-22-285-2668/9,
Tlx: 1182610 HARI IN Fax: 91-22-287-2202

Beijing
Daewoo Corp. Beijing Branch
Beijing Fortune Bldg. Room No. 901
5 Dong-San Huan Bei-Lu
Chaoyang District, Beijing,
China
Tel: 86-1-501-3161~4
Tlx: 210512 DWBJO CN Fax: 86-1-501-3160

Chicago
Daewoo Int'l (America) Corp.
3232 Kennicott Ave
Arlington Heights, Il 60004
Tel: 1-708-590-9800~9
Tlx: 6871670DWA CHG FAX: 1-708-590-9814

Cairo
Daewoo Corp. Cairo Liason Office
15th Floor Tonsi Hotel Bldg.
143 Tahrir ST., Dokki, Cairo, Egypt
Tel: 20-2-348-8004, 348-7405
Tlx: 20592 DWEGT UN Fax: 20-2-348-6381

Colombo
Daewoo Corp. Colombo Branch
Room 212, Liberty Plaza
250, Duplication Road
Colombo-3, Sri Lanka
Tel: 94-1-573152, 573153, 575524
Tlx: 22351 DAEWOO CE Fax: 94-1-574006

Detroit
Daewoo Int'l (America) Corp.
2855 Coolidge HWY., Suite 224
Troy, Michigan 48084, U.S.A
Tel: 1-313-649-0003
Tlx: 230349 DWA TRMI Fax: 1-313-649-0130

Dallas
Daewoo Int'l (America) Corp.
5005 LBJ Freeway Suite 740
Dallas, Texas 75244, U.S.A.
Tel: 1-214-702-8081
Tlx: 6868602 DWA DLS Fax: 1-214-991-6100,6358

Dubai
Daewoo Corp. Dubai Branch
Flat No. 1002, BCCI Bldg.
Bin Yas ST., Deira Dubai, U.A.E.
P.O. Box 8090, Dubai, U.A.E.
Tel: 971-4-232730, 283820
Tlx: 46866 DAEWOO EM Fax: 971-4-283933

Dhaka
Daewoo Corp. Dhaka Branch
Room No. L/261-4 Hotel Sonargaion
Karwan Bazar, G.P.O. Box 2579 Dhaka, Bangladesh
Tel: 880-2-315001~9(HTL PBX Ext. 4262)
310900, 325206 (Direct)
Tlx: 642641 DWD BJ Fax: 880-2-813121

Dalian
Daewoo Dalian Office
Dalian International Hotel, Room 911
9 Stalin Road, Dalian
China
Tel: 86-411-807222(Direct)
Tlx: 860557 DWDLC CN Fax: 86-411-807272

Frankfurt
Daewoo Handels GmbH
Hahn Strasse 31-35, 71-Niederrad
6000 Frankfurt/M, Germany
Tel: 49-69-664040
Tlx: 414957, 416923, 416869, 416700
DAEWOO D
Fax: 49-69-6640412, 6663047

Hong Kong
Daewoo Hong Kong Ltd.
15Fl., EIE Tower, Bond Centre
89 Queensway, Central(G.P.O. Box 5726)
Hong Kong
Tel: 852-5-532-9700
Tlx: 75274 DWHKG HX Fax: 852-5-868-4391

Hochiminh
Daewoo Hochiminh Branch
189 Nguyen Van Trio ST
10th Ward, Thu Nhuan District
Hochiminh, Vietnam
Tel: 84-8-441691, 443917
Tlx: 811277 DAEWOO VT Fax: 84-8-442819

Hanoi
Daewoo Representative office of Hanoi City
3rd Fl., Centre for Trade and Service
Tourism No. 1 Batrieu ST
Hanoi, Vietnam
Tel: 84-42-66159, 42-65244/5(Ext. 17)
Tlx: 411275 CTSC VT Fax: 84-42-65337

Panama
Daewoo Int'l (Panama) S.A.
P.O. Box 6-2240 El Dorado, Pma Avenida Balboa Y Calle 43 Edif Banco Exterior-Floor 21 Panama City Panama
Tel: 507-25-9444
Tlx: 2580 DAEWOO PG Fax: 507-25-9859

Praha
Daewoo Corp. Praha Branch
Koospol Bldg. Rm. No.754 Europska 178, 160 67 Praha 6, Czechoslovakia
Tel: 42-2-847715, 842848, 840020
Tlx: 123563 DWPH C Fax: 42-2-336-3440

Paris
Daewoo France S.A.R.L.
33-49 Ave. Du Bois De La Pie Zac Paris Nord II B.P 50363 95942 Roissy C.D.G. Cedex France
Tel: 33-1148.63.15.00~48.63.15.63
Tlx: DAEWOO 234646F
Fax: 33-1148.63.00.45, 48.63.00.46

Port Sudan Factory
P.O. Box 754 Port Sudan, Sudan
Tel: 249-31-21858
Tlx: 70003 ITMD SD

P.T. Petrowidada
Ya & Ma Manufacturing Co.
Jl. Jend. A. Yani, Gresik Jatim
P.O. Box 54 Gresik, East Java, Indonesia
Tel: 62-319-81245, 81355, 81811
Tlx: 31332 PWDGS IA Fax: 62-319-81245

Qingdao
Daewoo Qingdao Office
c/o Ba Da-Guan Hotel
15, Shaoguan Ru
Qingdao, China
Tel: 86-532-373276, 373270
Tlx: 321014 QDHTH CN Fax: 86-532-373278

Riyadh
Al-Bab Care of Daewoo
P.O. Box 89644, Riyadh-11692
Riyadh, Saudi Arabia
Tel: 966-1-464-6814, 464-6211
Tlx: 407404 ALBAB SJ Fax: 966-1-464-6814

Rabat
Daewoo Corp. Rabat Branch
53, Rue Moulouya, Angle Av. De France
Apt. N 15 Agdal Rabat, Morocco
Tel: 212-7-774931, 774935
Tlx: DAEWOORA 36249M Fax: 212-7-778684

San Francisco
Daewoo Int'l (America) Corp.
100 Pine ST., Suite 1745
San Francisco, California 94111, U.S.A.
Tel: 1-415-788-5555
Tlx: 6771292 DWA SFO Fax: 1-415-788-5559

Seattle
Daewoo Int'l (America) Corp.
Suite 1105 Plaza Center, 10900 N.E. 8th ST
Bellevue, Washington 98004 U.S.A.
Tel: 1-206-454-1454
Tlx: 6838093 DWA SEA Fax: 1-206-453-7004

Santiago
Daewoo Corp. Santiago Branch
Santa Rosa 356, Santiago Chile
Tel: 56-2-632-1257~9
Tlx: 340497 DAEWOO*CK Fax: 56-2-331685

Sao Paulo
Daewoo Corp. Sao Paulo Branch
(Daewoo Do Brazil Imp E Exp Ltda.)
Av. Paulista 777 And Conj 172
Cep 01311-Sao Paulo-Sp, Brazil
Tel: 55-11-285-5699
Tlx: 1135890 DWSP BR Fax: 55-11-283-1535

Stockholm
Daewoo Corp. Stockholm Branch
Kungsgatan 51, 1st Floor, S-111 22
Stockholm, Sweden
Tel: 46-8-237655, 219093
Tlx: 17095 DAEWOO S Fax: 46-8-213483

Sofia
Daewoo Corp. Sofia Branch
Interpred Bldg. Room 403
16, Bulgaro-Savetska Drujuba Blvd.
Sofia 1057, Bulgaria
Tel: 359-2-723839, 708497
Tlx: 2431/ KOTRA BG Fax: 359-2-700366

Sana
Daewoo Corp. Sana'a Branch
P.O. Box 898, Sana'a, Rep. of Yemen
Room 16, 2nd Fl.
Al-Muthar Bldg., Ring Road
Sana'a, Rep. of Yemen
Tel: 967-1-207146, 206654
Tlx: 2602 DAEWOO YE Fax: 967-1-209548

Singapore
Daewoo Singapore PTE LTD.
10 Shenton Way 15-08/09
M.A.S. Bldg., Singapore 0207
Tel: 65-2214166
Tlx: DAEWOO RS21786 Fax: 65-2254946

Sydney
Daewoo Australia PTY Limited
Suite 405, Victoria Cross Bldg.
60 Miller ST., North Sydney
NSW 2060 Australia
Tel: 61-2-957-5599
Tlx: DAEWOO AA24890 Fax: 61-2-925-0458

Shanghai
Daewoo Shanghai Office
Room 2408, Rui Jin Bldg.
205 Mao Ming Road South
Shanghai, China
Tel: 86-21-437-5630
Tlx: 33919 BTHRD CN(Room 2408 DAEWOO)
FAX: 86-21-437-5694

Toronto
Daewoo Canada Ltd.
396 Watline Ave. Mississauga
Ontario Canada L4Z 1X2
Tel: 1-416-507-9720~9721
Tlx: 06960172 DAEWOO TOR Fax: 1-416-507-9726

Tehran
Daewoo Corp. Tehran Branch
No. 23 Reza Nayebi ST
Vessal Shirazi Ave.
P.O. Box 14155-3531, Tehran, Iran
Tel: 98-21-663571~7
Tlx: 215705 DNTX IR Fax: 98-21-669805

Tripoli
Daewoo Corp. Tripoli Branch
Manara Road Benghasir
P.O. Box 15076, Tripoli, Libya
Tel: 218-22-30907
Tlx: 20887 DWFOR LY Fax: 218-22-30908

Taipei
Daewoo Corp. Taiwan Branch
12th Fl., (B)Formosa Plastic Bldg.
No.201 Tun Hwa N. Road
P.O. Box 34-58, Taipei, Taiwan
Tel: 886-2-7160002
Tlx: 20469 DAEWOO TW Fax: 886-2-7128386

Tokyo
Daewoo Int'l (Japan) Corp.
Rm 404, Toranomon Mitsui Bldg.
8-1, 3-Chome, Kasumigaseki
Chiyoda-Ku, Tokyo 100, Japan
Tel: 81-3-3597-7801
Tlx: 2226754 DWJPN J Fax: 81-3-3502-3824

Vancouver
Daewoo Corp. Vancouver Branch
510-1200 Burrard ST
Vancouver, B.C. V6Z 2C7, Canada
Tel: 1-604-669-4567
Tlx: DAEWOO VCR Fax: 1-604-669-7195

Vienna
Daewoo Corp. Vienna Branch
Nibelungen Gasse 13/1
A-1010 Wien, Austria
Tel: 43-222-568181, 568182
Tlx: 134359 A Fax: 43-222-5870554

Washington, D.C.
Daewoo Int'l (America) Corp.
1211 Connecticut Ave. Suite 305
Washington, D.C. 20036
Tel: 1-202-775-0788
Tlx: DAEWOO 6801207 UW Fax: 1-202-775-0943

Warsaw
Daewoo Corp. Warsaw Office
UL. Widok 22 M10
00-950 Warszawa Poland
Tel: 48-22-271141
Tlx: 814704 FORUM PL (Room No. 2310)
Fax: 48-22-27 78 56

Yeounde
Daewoo Corp. Yeounde Branch
B.P. 5060 Yeounde, Cameroun
Tel: 237-22-3-11 Tlx: DWYDE 8434 KN

Yangon
Myanmar Daewoo Int'l LTD.
No.22, Yawmgyi Road, Dagon Township
Yangon, Myanmar
Tel: 95-1-89935-8
Tlx: 21524 DAEWOO BM Fax: 95-1-80147