https://truckmanualshub.com/


Manufacturer:
**KION Baoli (Jiangsu) Forklift Co., Ltd.**
Add: No. 8 Xinzhou Road,
Economic Development Zone,
Jingjiang, 214500, Jiangsu, China
Tel: 0086-523-80161860
Email: export@baoli-mh.com
en.baoli-mh.com

Baoli Australia:
Linde Material Handling Pty. Ltd.
Add: 5 Distillers Place, Huntingwood, 2148
Tel: + (61) 2 9831 9500
Email: contact@lmhinfo.com.au
www.baoliforklifts.com.au

Baoli Europe:
Baoli Material Handling Europe s.r.o.
Add: Andel Park Smichov, Karla Englise 3201/6,
150 00 Prague 5, Czech Republic, Europe
Tel: 00420-255-725443
Email: rory.harveykelly@baoli-mh.com
www.baoli-mh.eu

Baoli India:
KION India Private Limited
Add: 5/4 Chandan Nagar Road, Pune 411 014, India
Tel: +91 20 67342130
Email: export@baoli-mh.com
www.kion-india.com

Baoli North America:
KION North America Corporation
Add: 2450 West 5th North Street Summerville, SC 29483
Tel: +1 843-875-8000
Email: trucksales.na@kiongroup.com
www.kion-na.com

Baoli South America:
**Brasil Office:**
KION South America
Add:Rod. Engenheiro Erm ê nio de Oliveira Penteado,
SP 75 - Km 56 | Bairro Itaici|
13340-600 | Indaiatuba - SP | Brasil
Tel: 0086-523-80161860
Email: export@baoli-mh.com
www.kiongroup.com.br

**Chile Office:**
**Linde High Lift Chile**
Add: Avenida El Retiro 1251 (ex N° 9301),
Centro Industrial El Montijo. Complejo Megacentro,
Renca, Santiago
Tel: +562 24398100
Email: info@baoli.cl
www.baoli.cl

**Peru Office:**
**Linde High Lift Peru**
Add: Av. Eloy Ureta 106, San Luis - Lima
Tel: + 51 01 201 1733
Email: ventas@linde-hl.pe
www.baoli-hl.pe

Baoli South East Asia:
KION South Asia Pte Ltd
c/o Linde Material Handling (M) Sdn. Bhd.
Add:No. 5, Jalan Apollp U5/192, Seksyen U5,
Bandar Pinggrian Subang, 40150 Shah Alam,
Selangor Darul Ehsan, Malaysia
Tel: +(60) 37859 0015
Fax: +(60) 37859 0025
Email: export@baoli-mh.com
en.baoli-mh.com


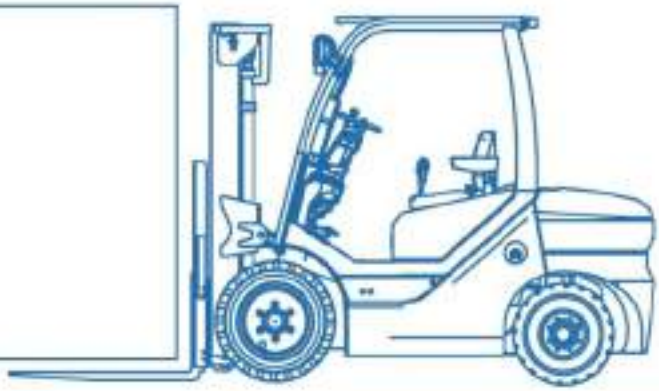

https://truckmanualshub.com/

# Operator Manual

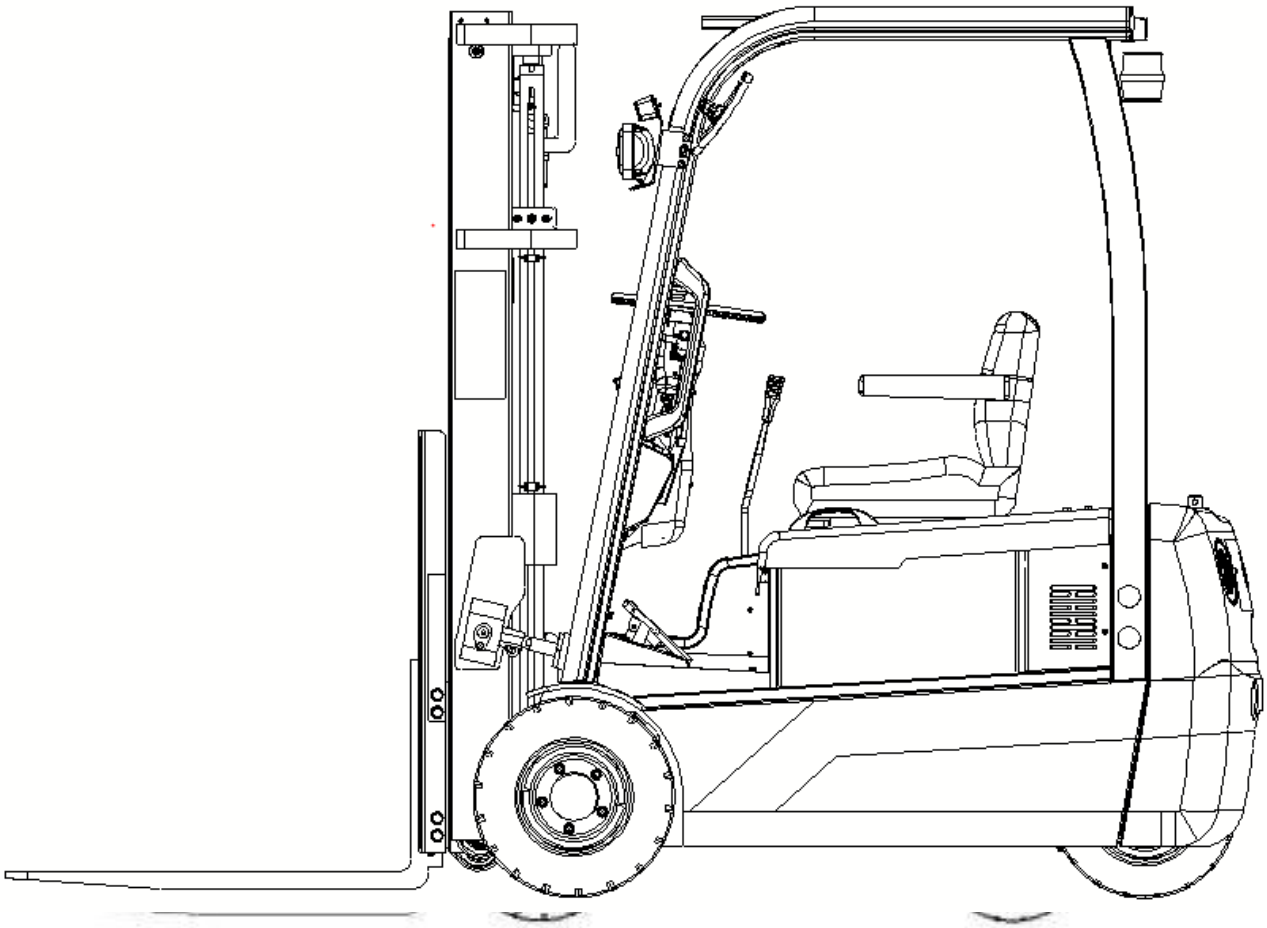

**KION Baoli (Jiangsu) Forklift Co., Ltd**

KB-2017-08-V1.0

https://truckmanualshub.com/

Applicable For

**KBET15-20**

# KION Baoli (Jiangsu) Forklift Co., Ltd

KB-2017-08-V1.0

https://truckmanualshub.com/

# Product information

## Instruction and maintenance manual

This chapter gives information taken from the instruction and maintenance manual, considered as of interest for the assistance technician.

NOTE

Consult the truck instruction and maintenance manual for detailed information on the use of the truck.

## General Forklift Description

The model described in this manual is an electric forklift with seated operator and counterbalanced forks.

- side shifts
- positioners
- grippers with jaws or forks
- tipping
- load arms
- .....

NOTE

For use of a piece of field equipment after the sale, it is necessary to apply to the authorized dealer which will verify its feasibility and, if applicable, perform the equipment installation, the updating of the residual capacity plates and the testing. The equipment will also have to be provided with identification plate and Assembly and Instructions Manual.

NOTE

The “crane arm” attachment changes the original intended use of the forklift, which may not move freely oscillating suspended loads. For such application a specific approval and EC certification of conformity is required for the forklift equipped in this manner. In this regard, it is necessary to contact the authorized dealer.

https://truckmanualshub.com/

# Definition of travel direction

https://www.truck-manuals.net/

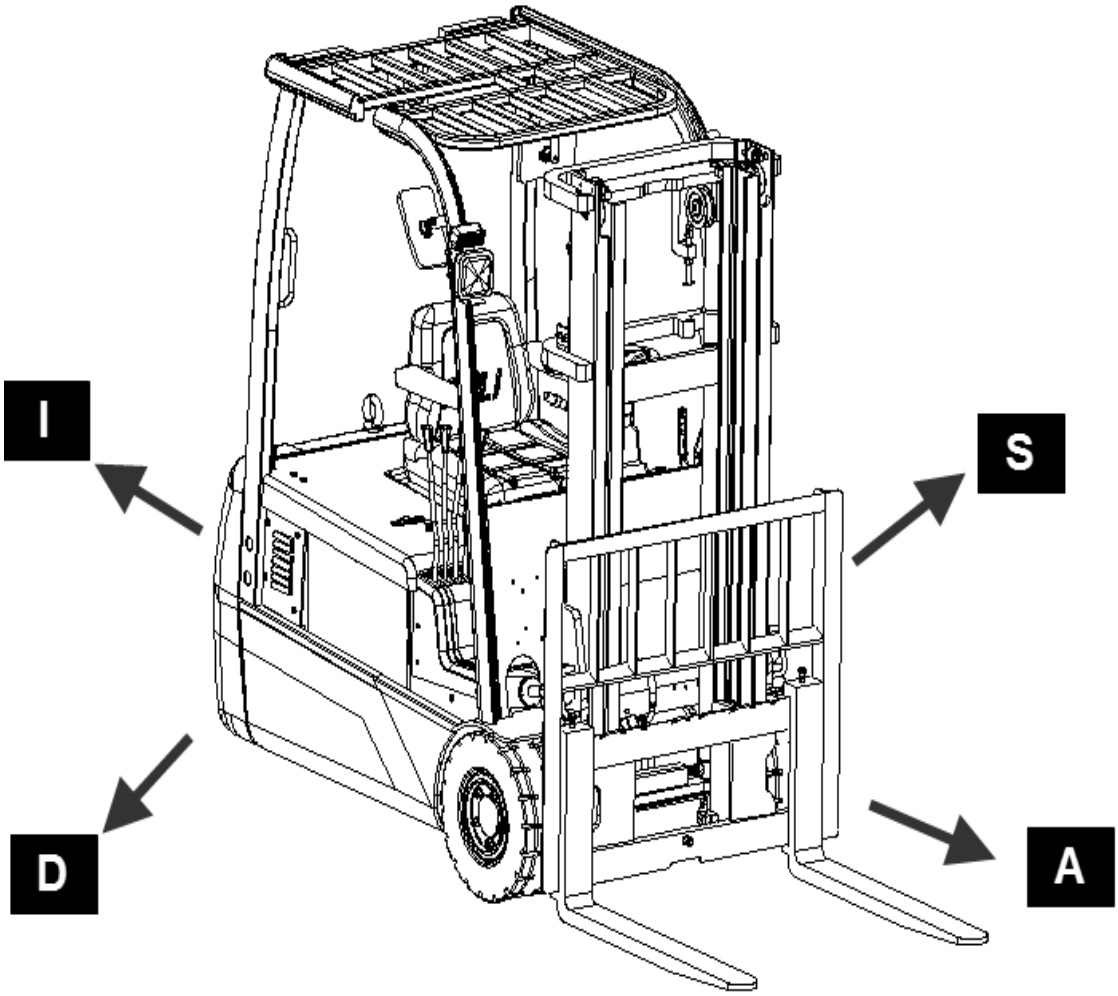


A Forwards
I Backwards
S Left
D Right

Overall dimensions for four-wheel truck

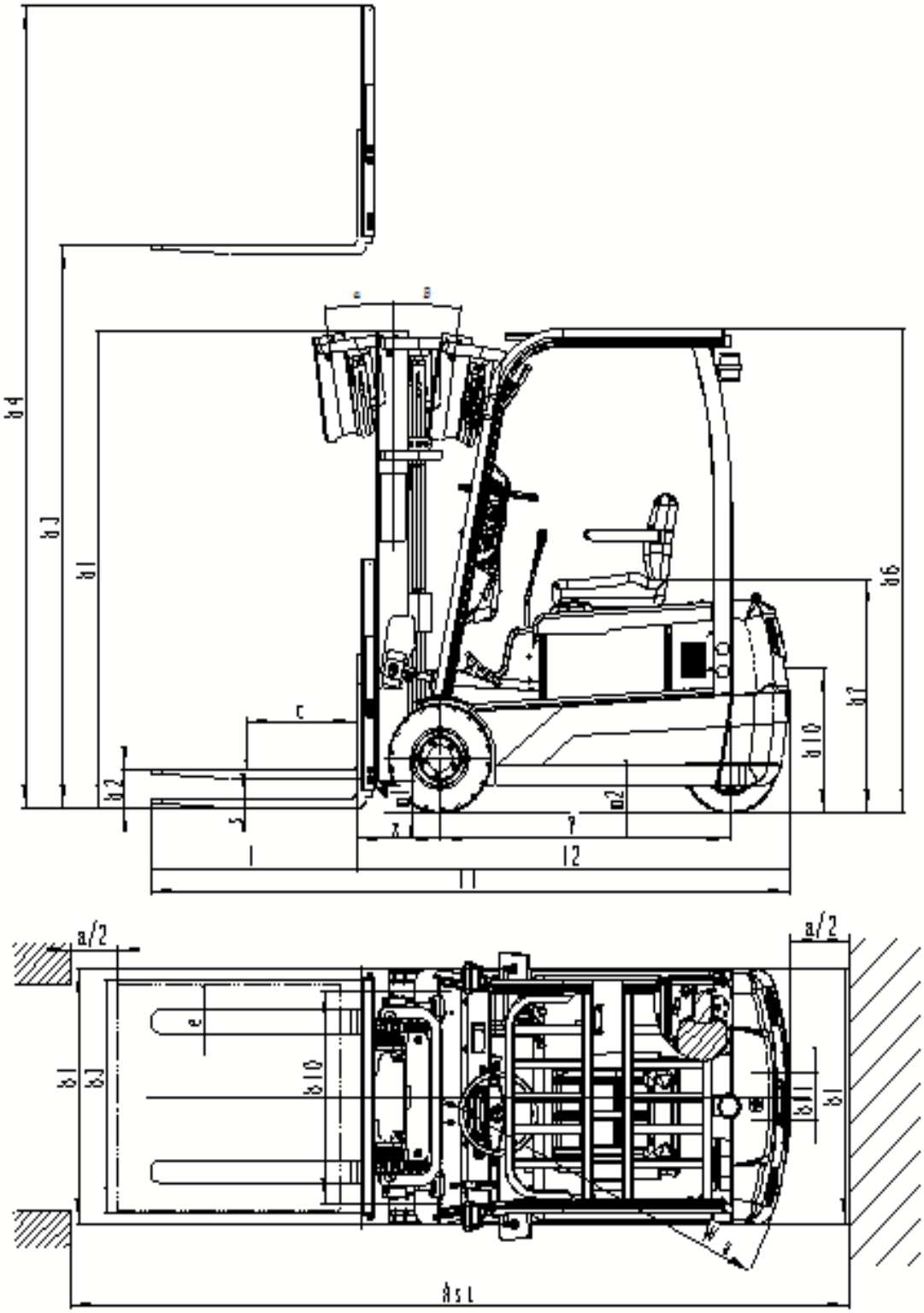

# three-wheel truck technical data

| P | Manufacturer (abbreviation) | | | BAOLI | BAOLI | BAOLI |
|---|---|---|---|---|---|---|
| 1.2 | Manufacturer's type designition | | | KBET15 | KBET18 | KBET20 |
| 1.3 | Drive: electric (battery or mains), diesel, petrol, fuel gas | | | Electric | Electric | Electric |
| 1.4 | Operator type: hand, pedestrian, standing, seated, order-picker | | | Seated | Seated | Seated |
| 1.5 | Rated capacity/rated load | Q | kg | 1500 | 1800 | 2000 |
| 1.6 | Load centre distance | c | mm | 500 | 500 | 500 |
| 1.8 | Load distance, centre of drive axle to fork | x | mm | 365 | 365 | 396 |
| 1.9 | Wheel base | y | mm | 1295 | 1295 | 1435 |
| 2.1 | Service weight | | kg | 3130 | 3260 | 3650 |
| 2.2 | Axle loading, laden front/rear | | kg | 3900/730 | 4530/530 | 4970/680 |
| 2.3 | Axle loading, unladen front/rear | | kg | 1500/1630 | 1500/1760 | 1650/2000 |
| 3.1 | Tyres: solid rubber, superelastic, pneumatic, polyurethane | | | S/E | S/E | S/E |
| 3.2 | Tyre size, front | | | 18x7-8 | 18x7-8 | 200/50-10 |
| 3.3 | Tyre size, rear | | | 16x6-8 | 16x6-8 | 16*6-8 |
| 3.5 | Wheels, number front/rear (× = driven wheels) | | | 2x/2 | 2x/2 | 2×/2 |
| 3.6 | Tread, front | $b_{10}$ | mm | 890 | 890 | 925 |
| 3.7 | Tread, rear | $b_{11}$ | mm | 205 | 205 | 205 |
| 4.1 | Tilt of mast/fork carriage forward/backward | α/β | ° | 5/7 | 5/7 | 5/7 |
| 4.2 | Height, mast lowered | $h_1$ | mm | 2005 | 2005 | a2007 |
| 4.3 | Free lift | $h_2$ | mm | 100 | 100 | a138 |
| 4.4 | Lift | $h_3$ | mm | 3000 | 3000 | a3000 |
| 4.5 | Height, mast extended | $h_4$ | mm | 3945 | 3945 | a4040 |
| 4.7 | Height of overhead guard (cabin) | $h_6$ | mm | 2015 | 2015 | 2075 |
| 4.8 | Seat height relating to SIP/stand height | $h_7$ | mm | 958 | 958 | 1065 |
| 4.12 | Coupling height | $h_{10}$ | mm | 600 | 600 | 637 |
| 4.19 | Overall length | $l_1$ | mm | 2850 | 2850 | 3103 |
| 4.20 | Length to face of forks | $l_2$ | mm | 1930 | 1930 | 2033 |
| 4.21 | Overall width | $b_1/b_2$ | mm | 1066 | 1066 | 1120 |
| 4.22 | Fork dimensions DIN ISO 2331 | s/e/l | mm | 35/120/920 | 35/120/920 | 40*122*1070 |
| 4.23 | Fork carriage ISO 2328, class/type A, B | | | ISO II/A | ISO II/A | ISO II/A |
| 4.24 | Fork-carriage width | $b_3$ | mm | 968 | 968 | 1040a |
| 4.31 | Ground clearance, laden, below mast, laden/unladen | $m_1$ | mm | 120 | 120 | 114/124 |
| 4.32 | Ground clearance, centre of wheelbase, laden/unladen | $m_2$ | mm | 110 | 110 | 105/110 |
| 4.34 | Aisle width predetermined load dimensions | $A_{st}$ | mm | | | |
| 4.34.1 | Working aisle width with pallet 1000 x 1200 crossways**** | $A_{st}$ | mm | 3025 | 3025 | 3380 |
| 4.34.2 | Working aisle width with pallet 800 x 1200 lengthways**** | $A_{st}$ | mm | 3225 | 3225 | 3485 |
| 4.35 | Turning radius | $W_a$ | mm | 1550 | 1550 | 1640 |
| 5.1 | Travel speed, laden/unladen | | km/h | 14/15.5 | 13.5/15 | 13/14 |
| 5.2 | Lift speed, laden/unladen | | m/s | 0.30/0.47 | 0.30/0.47 | 0.30/0.40 |
| 5.3 | Lowering speed, lade/unladen | | m/s | 0.46/0.42 | 0.48/0.42 | 0.46/0.42 |
| 5.6 | Max. drawbar pull, laden/unladen(5 minute) | | N | /8.7 | /8.8 | /9.7 |
| 5.8 | Max. gradeability, laden/unladen(5 minute) | | % | 20/20 | 20/20 | 15/18 |
| 5.10 | Service brake | | | Electric/mechanical | Electric/mechanical | Electric/mechanical |
| 6.1 | Drive motor rating S2 60 min | | kW | 2x6.5 | 2x6.5 | 2x6.5 |
| 6.2 | Lift motor rating at S3 15 % | | kW | 15 | 15 | 15 |
| 6.4 | Battery voltage | U | V | 48 | 48 | 48 |
| 6.4.1 | nominal capacity $K_5$ | $K_5$ | Ah | 505/525/595 | 505/525/595 | 625/700 |
| 6.5 | Battery weight | | kg | 810~920 | 810~920 | 900~990 |
| 10.1 | Operating pressure for attachments | | bar | 160 | 160 | 125 |
| 10.7 | Sound pressure level at the driver's seat | | dB(A) | ≤75 | ≤75 | ≤75 |
| | Drive control | | | AC | AC | AC |

* The specified rated lift takes into consideration the tyre deflection and the tolerances of the tyre diameter

** Without cab. Different values with cab

*** Fork overhang not included

**** For tele-, NiHo- and triplex mast

Note: E=Environmental protection solid tyre; S=solid tyre; P=Pneumatic tire

Note: E=Environmental protection solid tyre; S=solid tyre ; P=Pneumatic tire
1) With side shift ,+17mm
2) For alternative wheels, see table.
3) battery options (capacity/weight): 505AH/595Ah-810KG/920KG

**The values shown refer to standard outfits; they are indicative only and not binding.**

## Three-wheel truck tyre characteristics

| WHEELS | | | |
|---|---|---|---|
| Type | solid tyre | | Environmental protection solid tyre |
| | front | rear | front |
| 1.5T/1.8T | 16×6-8 | 18×7-8 | 16×6-8 |
| 2.0T | 16×6-8 | 200/50-10 | 16×6-8 |

## Fork lift truck capacities - Model 1300 kg 3 wheels - with vertical masts and

**forks = 1400 mm max.**

| mast type | max. height | Rated capacity load center 500mm 1.5T | Rated capacity load center 500mm 1.8T | height closed height | height height with carriage | free-lift height without carriage | free-lift height with carriage |
|---|---|---|---|---|---|---|---|
| VM Standard wide-view | 2500 | 1500 | 1800 | 1745 | 3542 | 140 | 140 |
| | 2700 | | | 1845 | 3742 | 140 | 140 |
| | 3000 | | | 2005 | 4042 | 140 | 140 |
| | 3250 | | | 2120 | 4292 | 140 | 140 |
| | 3300 | | | 2145 | 4342 | 140 | 140 |
| | 3500 | | | 2245 | 4542 | 140 | 140 |
| | 4000 | 1300 | 1600 | 2545 | 5042 | 140 | 140 |
| VFM Full free duplex | 2500 | 1500 | 1800 | 1745 | 3542 | 1250 | 743 |
| | 2700 | | | 1845 | 3742 | 1350 | 843 |
| | 3000 | | | 2005 | 4042 | 1500 | 993 |
| | 3300 | | | 2145 | 4342 | 1650 | 1143 |
| | 3500 | | | 2245 | 4542 | 1690 | 1243 |
| | 4000 | 1300 | 1600 | 2545 | 5042 | 1890 | 1543 |
| VFHM Full free triplex | 4000 | 1300 | 1500 | 1940 | 5042 | 1400 | 938 |
| | 4350 | 1280 | 1400 | 2065 | 5392 | 1525 | 1063 |
| | 4500 | 1250 | 1400 | 2115 | 5542 | 1575 | 1183 |
| | 4700 | 1250 | 1300 | 2185 | 5742 | 1645 | 1183 |
| | 4800 | 1200 | 1300 | 2215 | 5842 | 1745 | 1213 |
| | 5000 | 1100 | 1200 | 2315 | 6042 | 1775 | 1313 |
| | 5400 | 900 | 1000 | 2440 | 6442 | 1900 | 1483 |
| | 5500 | 750 | 850 | 2465 | 6542 | 1925 | 1463 |
| | 6000 | 500 | 650 | 2665 | 7042 | 2125 | 1663 |
| Remark: This data would be changed under different working condition | | | | | | | |

❖ subtract 150kg with side shifter

| mast type | max. height | Rated capacity load center 500mm 2.0T | Rated capacity load center 500mm | height closed height | height height with carriage | free-lift height without carriage | free-lift height with carriage |
|---|---|---|---|---|---|---|---|

| | | | | | | | |
|---|---|---|---|---|---|---|---|
| VM Standard wide-view | 2500 | 2000 | | 1757 | 3540 | 98 | 98 |
| | 2700 | | | 1857 | 3740 | 98 | 98 |
| | 3000 | | | 2007 | 4040 | 98 | 98 |
| | 3300 | | | 2157 | 4340 | 98 | 98 |
| | 3500 | | | 2257 | 4540 | 98 | 98 |
| | 4000 | 1800 | | 2557 | 5040 | 98 | 98 |
| | | | | | | | |
| VFM Full free duplex | 2500 | 2000 | | 1757 | 3540 | 1167 | 757 |
| | 2700 | | | 1857 | 3740 | 1267 | 857 |
| | 3000 | | | 2007 | 4040 | 1417 | 1007 |
| | 3300 | | | 2157 | 4340 | 1567 | 1157 |
| | 3500 | | | 2257 | 4540 | 1667 | 1257 |
| | 4000 | 1800 | | 2557 | 5040 | 1967 | 1557 |
| VFHM Full free triplex | 4000 | 1700 | | 2000 | 5035 | 1370 | 1000 |
| | 4350 | 1550 | | 2125 | 5385 | 1495 | 1125 |
| | 4500 | 1450 | | 2175 | 5535 | 1545 | 1175 |
| | 4700 | 1350 | | 2240 | 5735 | 1610 | 1240 |
| | 5000 | 1200 | | 2418 | 6035 | 1788 | 1418 |
| | 5400 | 1000 | | 2618 | 6435 | 1988 | 1618 |
| | 5500 | 950 | | 2652 | 6535 | 2022 | 1652 |
| | 6000 | 750 | | 2885 | 7035 | 2255 | 1885 |
| | | | | | | | |
| Remark: This data would be changed under different working condition | | | | | | | |

❖ subtract 150kg with side shifter

Lift types:
• SX: Simplex lift
• DX GAL: Duplex lift with free lifting
• TX GAL: Triplex lift with free lifting
• WITH SLI: with side shift
• WITHOUT SLI: without side shift
SES: Single superelastic tyres
PN: Pneumatic tyres
TWIN: Twin tyres
Lift inclination: Forward (Forw.) / Backward(Back.)

## Alternative lift characteristics

## Abbreviations key

Lift. = Lift
DX = Duplex lift
SX = Simplex lift
TX = Triplex lift
Sing. = Single tyre
Twin. = Twin tyres
Opt. = Optional
All lifts = All the lifts
S.E. = Superelastic
S. = Single
PN. = Pneumatic
RVE = Reverse while empty

# Tyre inflation pressure

| Type | AXLE | SIZE | PRESSURE |
|---|---|---|---|
| 1.5/1.8T | Front | 18×7-8 | |
| | Rear | 16×6-8 | |
| 2.0T | Front | 200/50-10 | |
| | Rear | 16×6-8 | |

# Lamps

| | |
|---|---|
| Front light | 12V-55W |
| Direction indicators lights | 12V-21W |
| Breadth indicators lights | 12V-5W |
| Tail and stop lights | 12V-21W |
| Reversing lights | 12V-10W |
| Flashing beacon | 12V-2W |

# Battery dimensions and weights

| Truck type | Voltage V | Capacity Ah | Weight kg±5% |
|---|---|---|---|
| 1.5T/1.8 | 48 | 505/525/595 | 810~920 |
| 2.0T | 48 | 625/700 | 900-990 |

**⚠ DANGER**

**The minimum and maximum weights of the batteries must be guaranteed.**

# Internal accessibility

**To access the internal parts of the truck (battery), proceed as follows:**

1) upward, open the battery cover, 2 ) remove bolts, open the electrical cover, 3) remove bolts, remove the floor, 4 remove bolts, removal of multi-way valve cover

**NOTE**

The battery cover is held open by a gas spring .

1):To close the cover, follow the instructions above in the reverse order.

https://truckmanualshub.com/

# Safety features

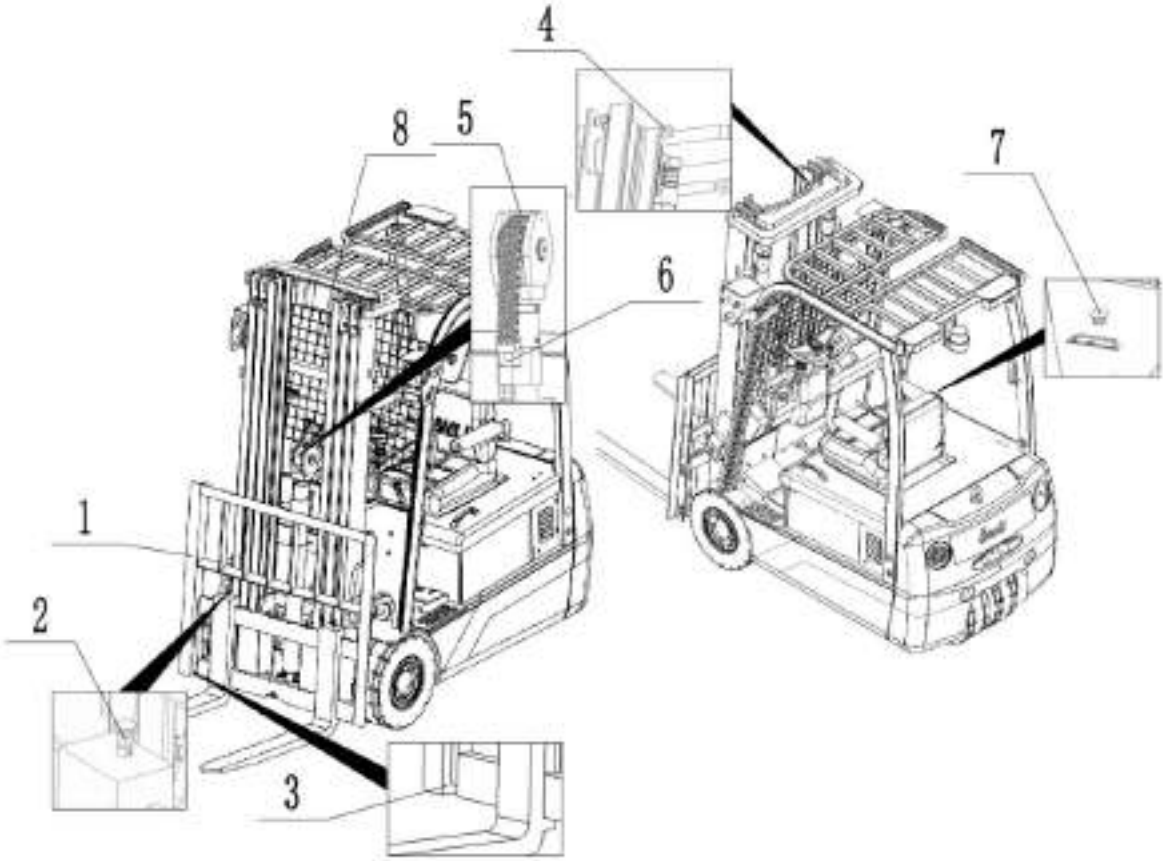


## Sollevatore:

| |
|---|
| 1. Load carrying grate |
| 2. Fork stop latches |
| 3. Fork retaining device |
| 4. Fork carriage retaining device |
| 5. Chain retaining device |
| 6. Chain tension rod retaining device |
| 7. Emergency stop button |
| 8. Shear protection net |

https://truckmanualshub.com/

| |
|---|
| 10. "Seat switch" microswitch that blocks operation of the truck when the operator is not seated on the driver's seat |
| 11. Restraining belt |
| 12. Overhead guard |
| 13. Alarm horn |
| 14. Reverse gear warning buzzer |

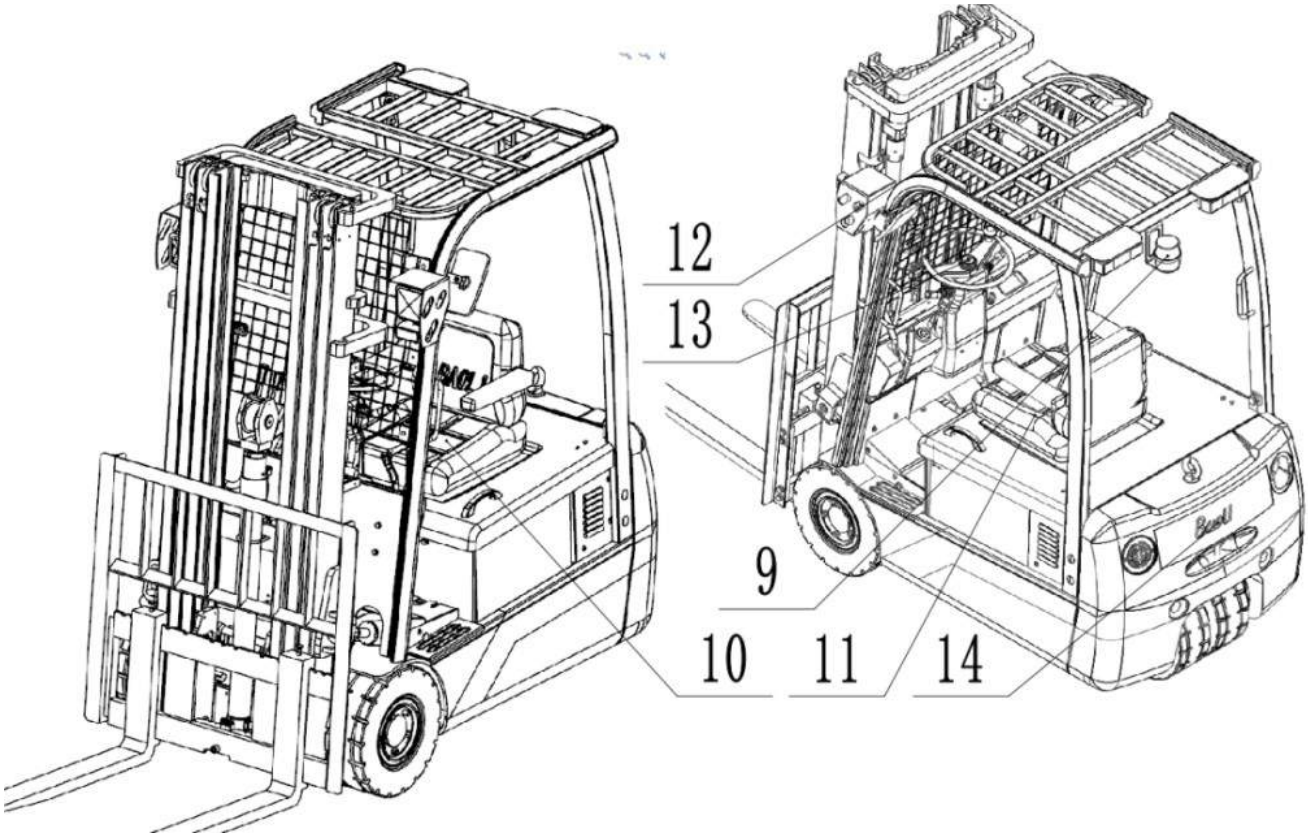


| |
|---|
| 9. flashing beacon |

https://truckmanualshub.com/

**NOTE**

These devices most be checked daily, as described in Chapter 4.

The forklift is normally transported complete wi forklift’s dim max. clearar transported sales netwo disassembly operations. secured to t during trans restraint sys wheels with even the sli

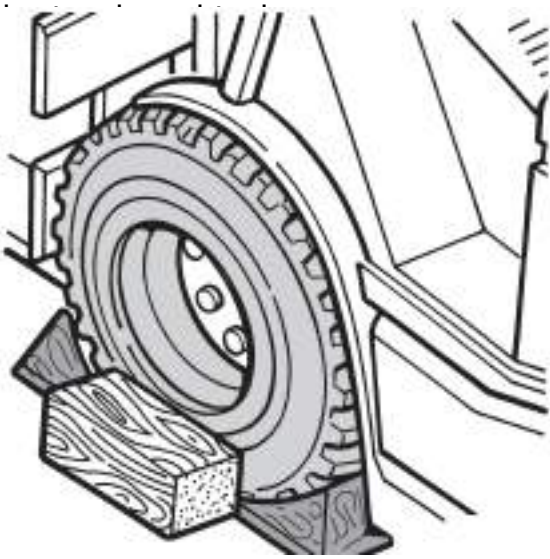

## Transporting the Forklift

https://truckmanualshub.com/

## Forklift towing

⚠ CAUTION

During the towing operation, the operator must be on board the truck in order to perform the steering and braking operations.

### NOTE

**Use non-metallic cables for towing**.

**Version with reversing on the steering wheel**

Before towing models with reversing lever on the steering wheel, check tha pos

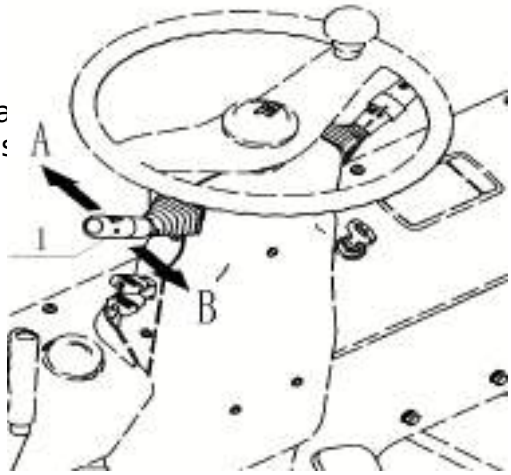

# Loading and unloading the truck

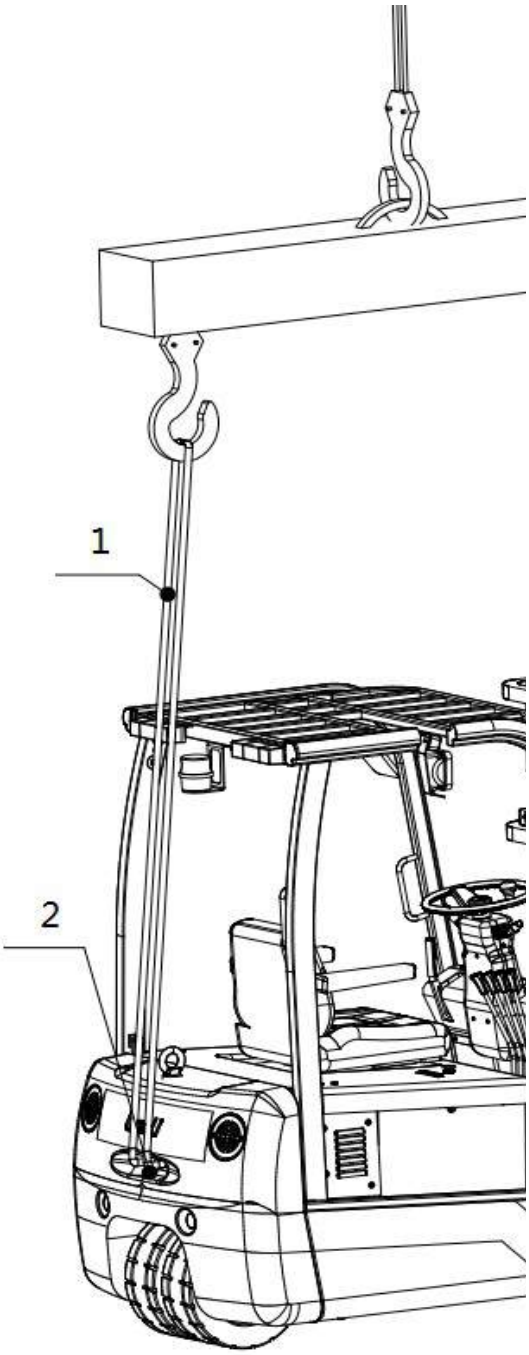


Use an inclined plane or movable loading ramp to load and unload the truck. If the truck is not operational or does not have the battery, lift it as described below.

https://truckmanualshub.com/

**⚠ DANGER**

Use a crane with a suitable lifting capacity for the weight of the truck, indicated on its designation plate. Also take into account the weight of the mounted battery (if applicable), consulting the relevant designation plate. The lifting operations must be performed by qualified personnel. DO NOT stand within the crane's radius of action or near the forklift. Use non metallic cables. Make sure that the lifting capacity of the slings is suitable for the weight of the truck.

**To lift the truck, proceed as follows:**

• Insert a non-metallic sling (1) into the rear tow coupling (2) of the truck. Check that the sling adheres to the upper part of the slot in the counterweight.

• Pass two slings (3), one on each side, through the upper crossmember (4) of the lift's fixed mast.

• Connect the free ends of the cables to the hook of the crane and lift without tearing.

**⚠ CAUTION**

The cables should have a suitable length so as to not graze the roof or any additional equipment during lifting. Use a lifting beam if necessary. The slings must be pulled vertically.

**⚠ CAUTION**

Any other lifting and transport method of the forklift is forbidden.

**⚠ CAUTION**

The forklift must be commissioned exclusively by the technical support service authorized by the manufacturer.

https://truckmanualshub.com/

# Safety precautions

## Description of safety symbols

This document gives the danger warnings Each of such danger warnings consists of a graphic symbol, followed by a description of the danger and its consequences, and the description of how it can be avoided. The types of warnings used are described below.

**⚠ DANGER**

This warning indicates serious risks for the safety of the operator and maintenance staff. It may be accompanied by additional comments.

**⚠ CAUTION**

This warning indicates serious risk of damaging the
truck.
It may be accompanied by additional comments.

## General safety Regulations

**⚠ DANGER**

https://truckmanualshub.com/

**Failure to observe the safety provisions can cause serious harm to technical staff and to the truck**.
During maintenance and repair procedures, scrupulously follow the prescriptions indicated below and the instructions given in this manual. Maintenance operations must be performed by qualified technical personnel authorized by the manufacturer. Always work within the limits of safety, according to the standards in force.

## ENVIRONMENT NOTE

Carefully follow the safety regulations pursuant to the provisions in force when handling working materials.

## NOTE

Important information regarding knowledge of the truck and its safe use along with basic information on truck maintenance are given in the **Instruction and maintenance manual.**

⚠ DANGER

**Do not carry out any cleaning, lubricating or maintenance activities when the battery is connected.**
If maintenance operations are carried out with the battery connected, the machine may accidentally be started, or sparks may cause harm to the technical staff
or to the machine itself. The battery must therefore be kept disconnected, unless expressly prescribed by the maintenance or repair instructions.

- All service actions must be carried out with maximum care and attention.

- Do not wear rings, wrist watches, jewellery, unfastened or hanging garments such as ties, torn clothing, scarves, unbuttoned jackets or blouses, or open zips, which could be caught in the moving parts.
- Operate in separate work areas specifically intended for maintenance or specially marked off to indicate work in progress.
- During maintenance operations, engage the parking brake, turn off the truck and remove the keys from the dashboard, unless expressly required by the operation being carry out.
- Ensure that the machine cannot be moved accidentally.
- The brakes are not activated when they are manually released for maintenance or repair operations: in this case provide for control of the machine using suitable chocks or similar.
- Ensure that no one is within range of any movement of the machine or equipment.
- Do not carry out any maintenance or repair on the machine with a person sitting in the seat, unless the person is qualified and necessary for execution of the operation.
- Do not switch on the machine or activate its equipment from any position other than sitting in the driver’s seat.

https://truckmanualshub.com/

- To avoid improper use or use in unsafe conditions, label all controls to mark that repairs are in progress.
- Do not leave the machine unattended with parts in movement.
- Immobilise the machine and all equipment or parts that are subject to maintenance while raised, or which could accidentally move.

- When carrying out operations from beneath the truck, always use a maintenance well or a bridge crane of adequate capacity.
- The areas for maintenance must be level, and must be kept dry and clean; any puddles of water or oil stains must be removed immediately.
- Do not pile up rags soaked in grease or oil: they represent a serious fire hazard. Always place them inside a closed metal container.
- If working on a sloping surface is inevitable, immobilise the machine before starting to work, and move it to a level surface as soon as this can be done with a certain margin of safety.
- Service stepladders and platforms used in the workshop or on the worksite and other equipment must conform with the accident prevention standards in force.
- After completing maintenance operations, the truck must be returned to normal conditions of use, taking care to check the correct installation of all prescribed safety and protective devices. Take care to remove all equipment from the machine, and check accurately that all parts are firmly fixed.
- To tow the truck, comply with the instruction in this manual, using the provided connection points exclusively. Make all connections carefully/ ensure than pins and/or latches foreseen are firmly fixed before starting to tow the truck. Do not remain in the vicinity of the tow bar, ropes or chains working under tension.
- To move a machine that has broken down, use a trailer or a truck with a lowered loading platform, if available.
- When transporting the truck, follow the indications in this manual. To load and unload the machine on and off the transport means, choose a level area with a solid surface to support the wheels of the trailer or lorry. Anchor the machine firmly to the loading platform of the lorry or trailer and block the wheels.
- The chains must be firmly fixed: make sure that the anchorage is sufficiently resistant to support the foreseen load. No one must be within the vicinity of the chain or rope anchorage points under tension.
- Handle each part with extreme care. Keep hands and fingers away from interstices, rotating parts and similar.
- When lifting or transporting heavy parts, use pulleys or similar of adequate capacity, and keep all persons at a safe distance.
- Move with great care when carrying out work beneath the machine, and also when in the vicinity of the same.
- Stop the motor and make sure that there is no pressure in the hydraulic circuits before removing caps or covers.
- If any part is blocked, free the same only when the motor is off and the battery is disconnected.
- Do not check or top up the fuel tank, the hydraulic oil or the battery while smoking since

the fluids used are inflammable.
- Never pour petrol or diesel oil into open, wide or low recipients because of the risk of inflammable vapours and spills.
- Never use petrol, diesel oil or inflammable fluids for cleaning: always use non-toxic commercial solvents.
- When using compressed air for cleaning small parts, use protective goggles with side guards; use a maximum pressure of 2.1 bars according to local or national legislation in force.
- When handling easily inflammable material, do not smoke, do not use open flames, and do not cause sparks in the vicinity.
- Do not use flames as a means of illumination when proceeding with operations or when searching for leaks on the machine.
- Do not carry objects in pockets which could accidentally fall into the open parts of the machine.
- When there is any possibility of being hit by metallic parts or similar, use goggles with protective side guards, helmets, protective footwear and safety gloves.
- During welding operations, always use protective accident-prevention devices. Protective goggles must also be worn by anyone in the vicinity, even if not carrying out work. Never look at the welding arc without adequate eye protection.
- With use, metal cables become frayed: when handling them, always use adequate protection (gloves, goggles, etc.). Do not use chains r ropes that are worn or bent for lifting or pulling.

## Electrical system –

⚠ DANGER

## batteries

**Before performing any operation on the electrical system, disconnect the battery outlet from the relative plug.**

- When using the batteries, it must be remembered that both ends of the cables must be linked to the terminals in the correct manner: (+) to (+) and (-) to (-).
- Avoid short circuiting the battery terminals.
- The gas released from the battery is highly inflammable. When recharging, leave the battery compartment open to allow for more effective ventilation and remove the caps. Ensure that ventilation is adequate in order to avoid the possibility of accidental explosions due to the accumulation of gas released during recharging.
- Never check the state of the battery by means of a “bridge” created by placing a metal object on the terminals.
- Avoid sparks and flames in the battery area.
- Do not smoke near the battery or in the maintenance area in order to avoid the risk of explosions.
- Before any operation, check that there are no electrolyte leaks: eliminate such leaks

https://truckmanualshub.com/

before proceeding with the work.

- Refer to the specific Instruction and Maintenance Manual of the drive battery.
- Before any operation, check that no elements are short circuited: eliminate such short circuits before proceeding with the work.
- For electric heaters, battery chargers and similar appliances, use only effectively earthed auxiliary power sources in order to avoid the possibility of electric shocks.

https://truckmanualshub.com/

## Hydraulic system

DANGER

**Small high pressure jets of oil can penetrate the skin.**

Penetration of the skin by hydraulic oil under pressure spurting from the hydraulic system is dangerous. If this type of lesion should occur, contact a doctor immediately. Small leaks should be sought by the aid of a piece of cardboard or a piece of wood. Avoid using the hands to look for leaks.

- Use special instruments to check the pressure of the hydraulic system.

## Disconnections and reconnections

DANGER

**Before removal and installation of any component, disconnect the relative plug from the battery outlet.**

- Lift and handle all particularly heavy parts by means of lifting gear of an adequate capacity.
- Ensure that pieces are supported by appropriate harnesses and hooks.
- Use the lifting rings specifically provided for the purposes. Pay attention to persons in the vicinity of the load to be lifted.
- Handle all pieces with great care.
- Do not place hands or fingers between one piece and another.
- Avoid twisting the chains and metal cables.

# Safety Regulations Relative to Operating Materials

## Rules for handling and disposing of operating materials.

**ENVIRONMENT NOTE**

Improper use and disposal of operating and cleaning materials can cause serious damage to the environment.

- Always use and handle the operating materials in a suitable manner and follow the manufacturer's instructions for the product's use.
- Keep the operating materials only in containers intended for this purpose and in a location that satisfies the requirements.
- The operating materials may be flammable, so avoid contact with hot objects or open flames.
- When topping up the operating materials, only clean containers should be used.
- Follow the manufacturer's safety and disposal instructions regarding the operating and cleaning materials.
- Do not disperse oils or other operating liquids! Any spilt liquid must be immediately collected and neutralised with a binding material (such as an oil binder) and then disposed of in accordance with current regulations.
- Always abide by the regulations of the anti-pollution laws!
- Before carrying out work that involves lubrication, filter replacement or hydraulic equipment interventions, the area in question must be thoroughly cleaned.
- The replaced parts must always be disposed of in accordance with the anti-pollution laws.

## ENVIRONMENT NOTE

The incorrect or unlawful use of brake fluid is harmful to people's health and the environment.

## Oils

- Do not allow to come into contact with the skin.
- Do not inhale oil vapors.

- Wear appropriate means of individual protection during forklift maintenance operations (gloves, goggles, etc.) to prevent the oil from coming into contact with your skin.

## ENVIRONMENT NOTE

**⚠ DANGER**

The used oils (brake, motor, transmission, gearbox and hydraulic oil) and relative filters contain substances hazardous to the environment and must be disposed of according to current regulations. We advise you to contact the authorised service network.

**The penetration in the skin of hydraulic oil that has leaked**

https://truckmanualshub.com/

**under pressure from the forklift’s hydraulic system is dangerous. If this type of lesion should occur, contact a doctor immediately.**

https://truckmanualshub.com/

**⚠ DANGER**

**Small high pressure jets of oil can penetrate the skin. Look for any leaks using a piece of cardboard.**

## Battery Acid

- Do not inhale the vapor: it is poisonous.
- Use adequate means of individual protection to prevent contact with the skin.
- Battery acid is corrosive: if it should come into contact with your skin, rinse abundantly with water.
- Explosive gas mixtures can form when charging the battery; therefore, the rooms in which the battery is charged must be in compliance with the specific regulations on the subject (e.g. CEI-EN 50272-3,...).
- DO NOT smoke or use open flames and lights within a 2 m radius from the charged battery and in the battery charging area.

## NOTE

For greater information, consult the specific battery manual that comes with the battery.

## ENVIRONMENT NOTE

The batteries contain substances that are hazardous to the environment. The replacement and disposal of the life-expired battery must be carried out as required by law. We advise you to contact the authorised service network that is equipped for eco-friendly disposal in accordance with current regulations.

https://truckmanualshub.com/

# Maintenance

## Preliminary operations before commissioning

Below are listed the operations that must be performed on the forklift before delivering it to the customer:

- General test of the forklift.
- Check and top-up, if necessary, the oil in the hydraulic system tank.
- Visually check the seal of the lift cylinder gaskets, tilt cylinders, steering control cylinder and side shift, distributor, oil pump, hydraulic system piping and fittings; eliminate any leaks. Check the oil level and top-up, if necessary, for the motor, hydraulic and differential transmission, reducers; eliminate any leaks.
- Check the brake fluid level and top-up, if necessary; visually check the seal of the brake system, service brakes and parking brake; eliminate any leaks.
- Check the motor cooling water level and top-up, if necessary; visually check the seal of the motor cooling circuit; eliminate any leaks.
- Check the inching pedal linkage, fan belt tension, handbrake tension and adjust if necessary.
- Check and restore, if necessary, the wheel nut tightening, retaining screws fastening the lift to the truck, counterweight, protective roof, lifting chains and their anchorage, clearance between movable parts, pneumatic pressure.
- Check the operation of the electrical recharging system, ignition, control instruments, and battery liquid level.
- Forklift lubrication and greasing.
- Lift greasing (mast, rolling tracks).
- Check of the safety devices

**NOTE**

For the description of the operations, refer to the relative paragraphs.

https://truckmanualshub.com/

# Synoptic Table of Maintenance Operations

| Operation | Hours | |
|---|---|---|
| | Everyday | 100 |
| Check wheel nut tightening | | |
| Parking brake check | | • |
| Chain tension check and adjustment | | • |
| Check hydraulic tank oil level | • | |
| Cleaning of the electronic panel | | • |
| Lubricating the steering axle | | |
| Fork carriage guide lubrication | | • |
| Service brake check | | • |
| Trunnions greasing | | • |
| Reduction gear oil level check | | • |
| Rolling tracks greasing | | • |
| Grease rear wheel bearings (4 wheels) | | |
| Seat belt blocking system check | | |
| Lubricate lift chain | | • |
| Chain check and maintenance | | •(1) |
| Change gearbox oil | | |
| Check and adjust lift clearances | | |
| Change hydraulic oil filter cartridge | | |
| Protective roof tightening screws check | | |
| Check fork wear | | (1) |
| Check brake oil level | • | |
| Change hydraulic system oil | | |
| Axial maintenance | | |
| Change brake oil | | |

(1) = To be carried out absolutely every 3 months or according to current legislation.
(2) = Every 1000 hours or at least every 12 months.
(3) =First change after 1000 hours, then every 3000 hours.

Proceed as follows at each lubrication operation:
• Follow the safety precautions for the lubricant;
• Before lubricating, carefully clean the component to be lubricated;
• Use suitable binders if the lubricating product should spill;
• Keep the product in a suitable and compliant place, as per the instructions supplied with the product;
• Dispose of the lubricating product in compliance with the current laws.

ENVIRONMENT NOTE

## ENVIRONMENT NOTE

# Proceed as follows at each lubrication operation:

- **Follow the safety precautions for the lubricant;**
- **Before lubricating, carefully clean the component to be lubricated;**
- **Use suitable binders if the lubricating product should spill;**
- **Keep the product in a suitable and compliant place, as per the instructions supplied with the product;**
- **Dispose of the lubricating product in compliance with the current laws.**

# Supply Table

| Element to be supplied | | Quantity | Lubricants | International specifications |
|---|---|---|---|---|
| Hydraulic circuit | 1.5T/1.8T | 24L | L-HM46&L-HM32 | ISO VG30 |
| | 2.0T | 38L | L-HM46&L-HM32 | ISO VG30 |
| Bearings and grease nipples | | 0.1 kg | JISK2220/2# | |

| | | | | |
|---|---|---|---|---|
| gearbox | 1.5T/1.8T | ATF220 | | |
| | 2.0T | SAE-80W | | SAE-80W/API GL4/UTTO |
| Chains | | | Lubricant STRUCTOV FHD | ISO VG 150 |
| Oil-immersed brakes | | 0.2 L | | dot3 |

https://truckmanualshub.com/

# Diagnostic software

## Connection between the diagnostics PC and the forklift

The diagnostics PC connects to the forklift through the SME interface cable.

The connection can be performed on all modules.

**⚠ CAUTION**

The connection between PC and forklift must be performed with

**⚠ CAUTION**

the forklift turned off.
The diagnostics unit must be used by trained personnel only. The variation of some parameters or configurations may cause hazardous situations for the operator.

# Software

The software to be used for the parameterization and diagnostics is EYEPLUS.

Instructions:

- Connect the PC to one of the electronic modules using the interface cable.
- Access the software through the relative icon.
- If EYEPLUS software installation is successful, starting the application from Windows “Programs” Menu, or using short-cut on desktop (Fig.1), you can access main menu.
- On left side, there are some notes about software release, operating mode and serial communication settings. Below lift-truck picture ( picture, normally present in main menu, doesn’t appear in fig.2).

There are actual active alarms (code level and description); in case of more alarms with the same priority level, the first occurred is visualized.

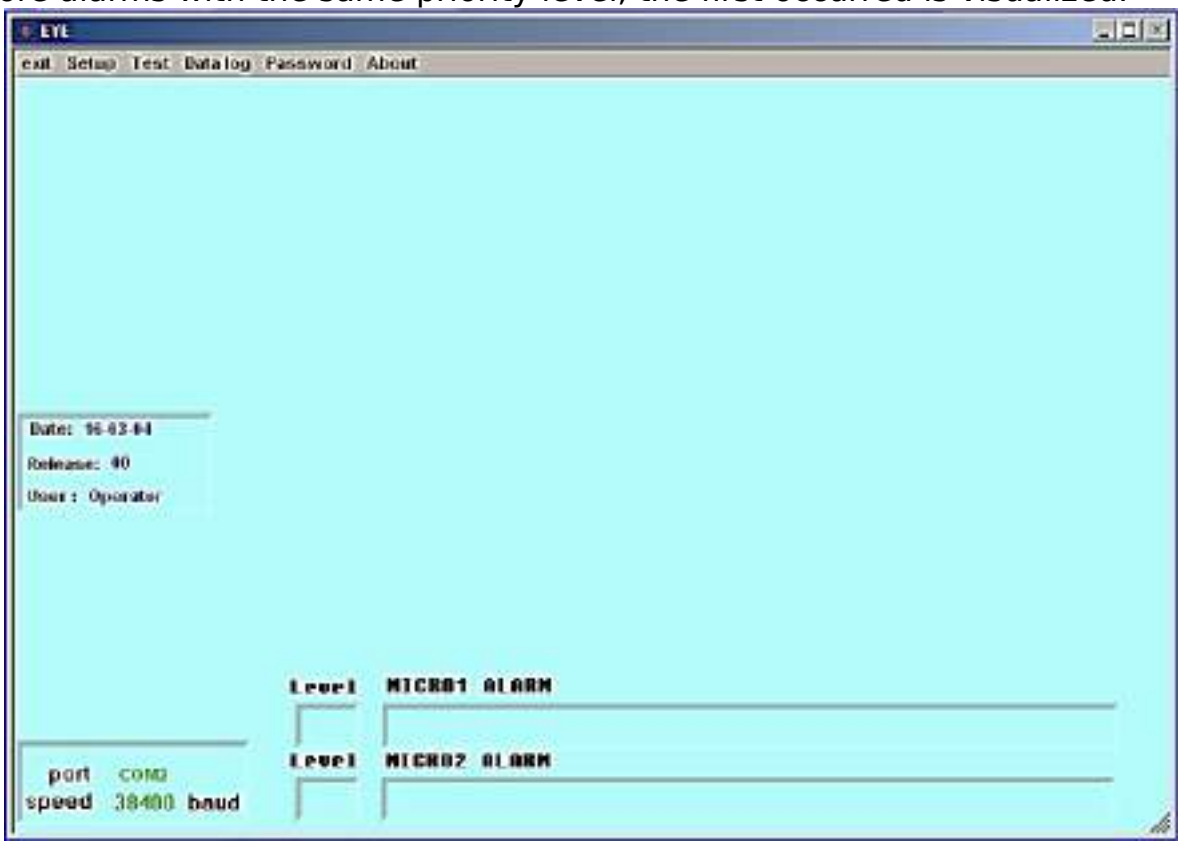

https://truckmanualshub.com/

Starting EYEPLUS application, your system memory is read to in order to know truck model and to properly customize all menus, because more than one lift truck model can be available.
For example see drive motor menu in case of twin drive motors (Fig.11) and in case of single drive motor (Fig.12).

In case panel memory is blank, user himself is automatically asked to select truck model from a list defined in a configuration file named “Truckmodel.ini” (listing all truck models with their main characteristics).

Moreover, if user programs flash memory, EYEPLUS software loads source files from a directory named as lift truck model itself: this way proper source files are automatically associated to selected truck model (see FLASH PROGRAMMING section for further information ).

In operator mode, from main menu you can access following menus:

“ **Exit** ”
“ **Setup** ”
“ **Test** ”
“ **Data logging** ”
” **Password** ”
” **About** ”

“Setup”, “Password” (refer to chapter 3.1.1) and “About” (Fig.3) menus are accessible even before starting of serial communication between lift truck and PC (Fig.4); in such a case some data field are missing.

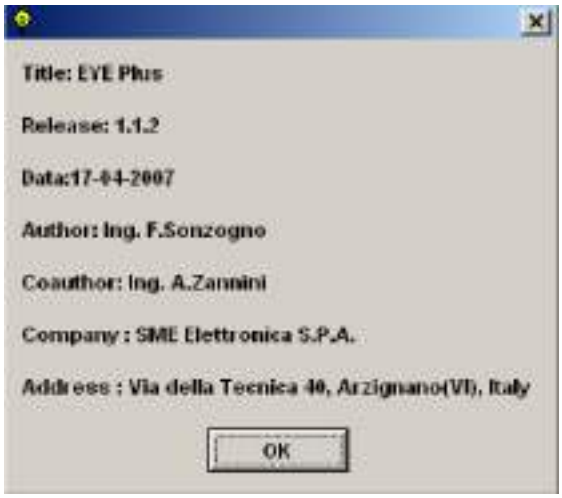


To quit application or exit a submenu, press ESC key or select “Exit” menu.

In case of any problems, refer to section 4
“TROUBLESHOOTING”

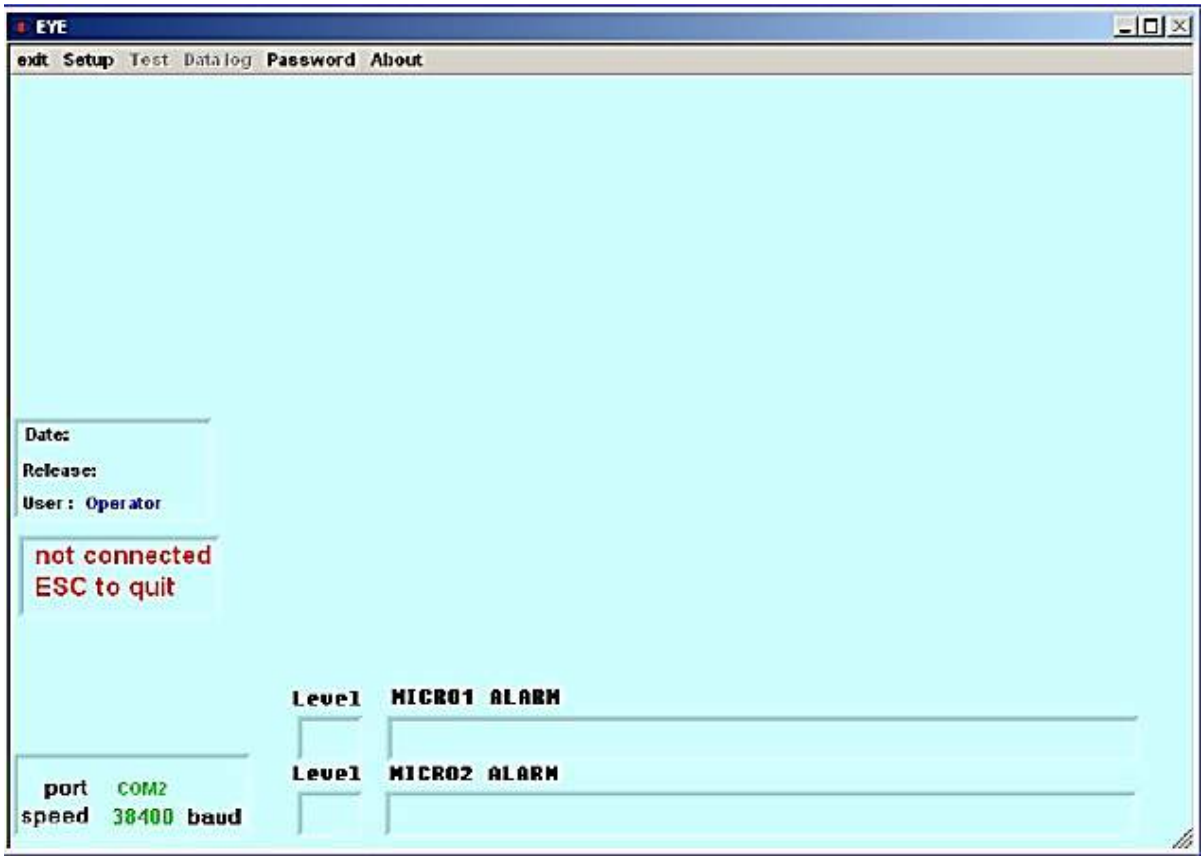


In case of faults during a serial communication data flow, any submenu is aborted and main menu front panel is reinitialized.

## PASSWORD INSERTION

Selecting Password mode from menu-bar, you can
access Supervisor mode (Fig.7), inserting the right
password (Fig.5).

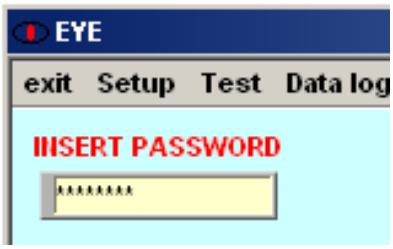


In case of wrong password insertion message Fig.6 becomes visible.

**Contact EYEPLUS software developer to know correct password.**

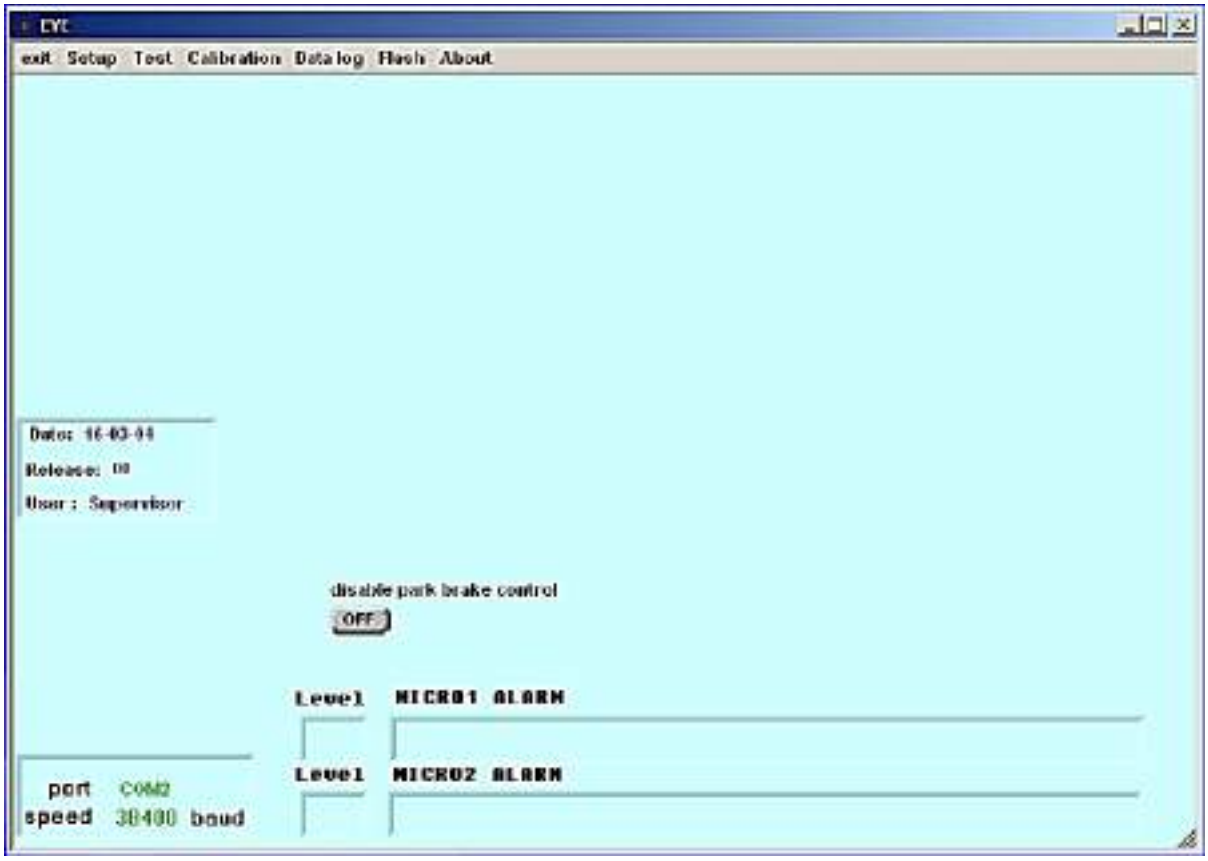


In Supervisor mode, you can access these further menus:

**“ Calibration ”**

**“ Flash ”**

“ Password ” menu disappears from menu-bar.
In case of faulty serial communication, main menu front panel is reinitialized as follows (Fig.8)

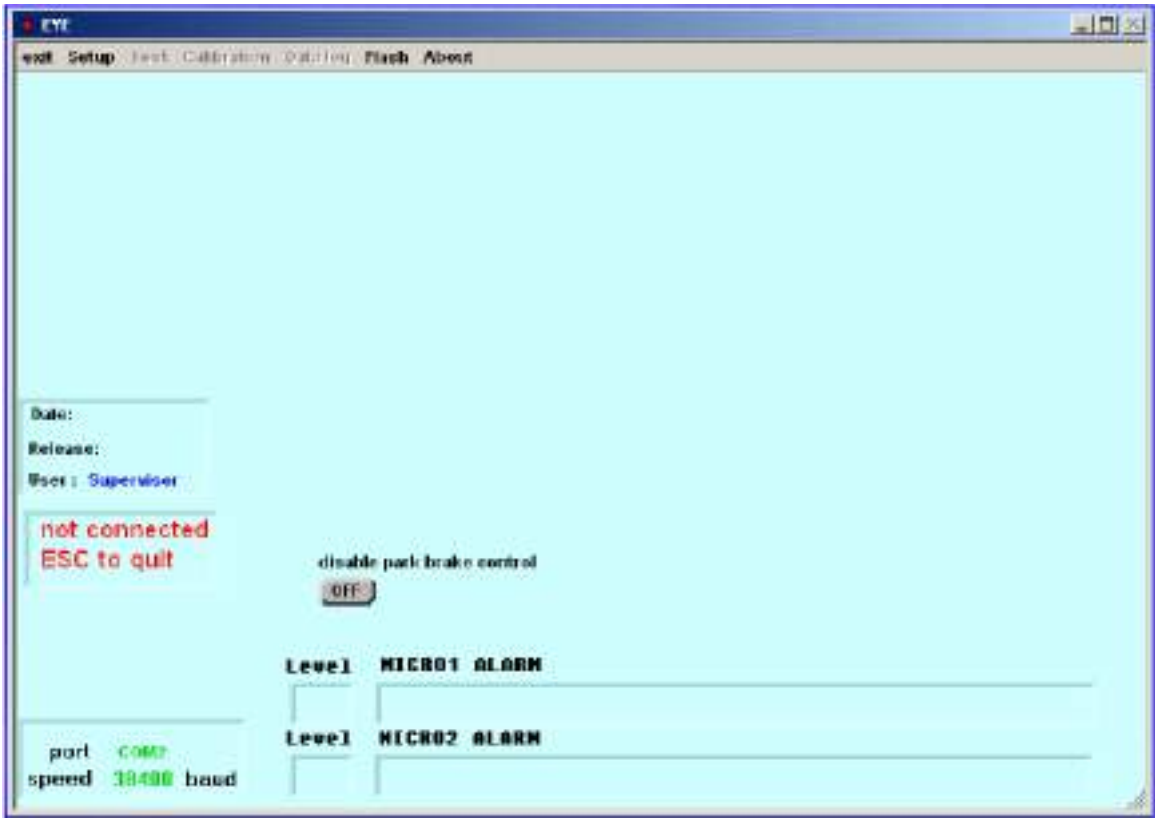


**Notice : “PANEL BLANK” message is used to distinguish case of not programmed flash memory, so Flash menu is obviously active.**

You can select active menus directly from main panel menu bar (any greyed menu is not accessible in that moment); you can also access present sub panels with a further selection by a pop-up menu (Fig.9)

https://truckmanualshub.com/

# NOT ACTUAL SOFTWARE / EEPROM CRC FAULT

A CRC alarm message is visualized both in case of failed EEPROM memory writing and of using a software version without the CRC control procedure.

Pressing the visualized button, you can load in EEPROM default values: if you don’t execute this procedure, calibration functions are inhibited.

You have now to execute calibration procedure (see inverter manual).

A message signals also the presence of not actual software loaded on inverter panel.

In such a case you can access only basic EYEPLUS functions: some menus, for compatibility
reasons, will be inhibited.

https://truckmanualshub.com/

# SUBMENUS

"**Print**" function is accessible from many of listed submenus: you can send active front panel image to printer or save it on file; in that case destination directory is <**EYEPLUS PATH>\EYEPLUS\images**.

**Notice:** if more than one window is in use, only the one relative to the inner submenu is active and all others work in background.
If you select a non active window, you can't communicate\ interact with inverter panel.
In such a case mouse cursor assumes the shape of an hour-glass if a non active window is
selected.

# CONFIGURATION MENU (SETUP)

From setup menu (Fig.10) you can select communication serial port and image file format used by Print function .

# TEST MENU SECTION

This pop-up menu includes following diagnostic items :

- "Drive" menu both for twin motor applications (Fig.11) and for single motor applications (Fig.12)
- "Pump" menu (Fig.13)
- "Battery" menu (Fig.14)
- "Timers" menu (Fig.15)

# DRIVE (TRACTION) TEST MENU

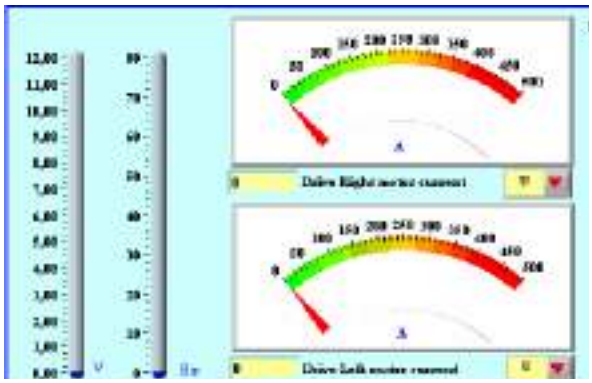

Following items appear in Drive menu front panel for twin motor applications:

- Accelerator pedal voltage
- Pedal brake pressure (in bar)
- Drive motors phase currents: you can select current phase from pop-up menu
- Both modules temperature: you can select measure unit between °C and °F.

**Notice: temperature above 60°C is signalled by a red colour; temperature above 90°C is signalled by a flashing display.**

- Steering angle in percent, using following criteria:

| | |
|---|---|
| 0% | steering completely on left |
| 50% | straight wheels |
| 100% | steering completely on right |

- Steering sensor voltage and steering switch status
- Request RPM and motor speed for both motors, with an arrow signalling direction
- Drive motors encoder diagnostic leds, both for A and B channel
- Both motors temperature: you can select measure unit between °C and °F.

**Notice: in case of an overheating alarm, the corresponding green led becomes red.**

- Active output command switches
- Start, forward, reverse and seat switches status; pedal and hand brake status

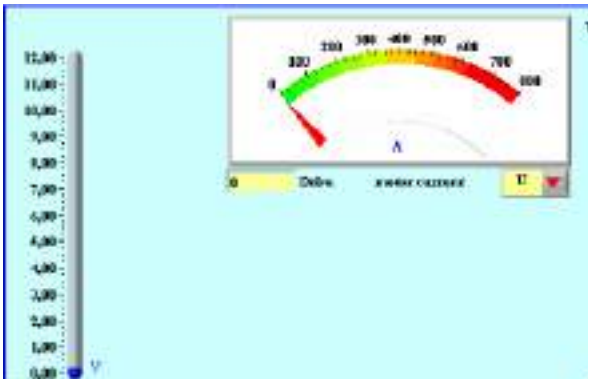

Following items appear in Drive menu front panel for single motor applications:

- Accelerator pedal voltage
- Pedal brake pressure (in bar)
- Drive motor phase current: you can select current phase from pop-up menu
- Module temperature: you can select measure unit between °C and °F.

**Notice: temperature above 60°C is signalled by a red colour; temperature above 90°C is signalled by a flashing display.**

- Steering angle in percent, using following criteria:

| | |
|---|---|
| 0% | steering completely on left |
| 50% | straight wheels |
| 100% | steering completely on right |

- Steering sensor voltage and steering switch status
- Request RPM and motor speed for drive motor, with an arrow signalling direction
- Drive motor encoder diagnostic leds, both for A and B channel
- Motors temperature: you can select measure unit between °C and °F.

**Notice: in case of an overheating alarm, the corresponding green led becomes red.**

- Active output command switches
- Start, forward, reverse and seat switches status; pedal and hand brake status

# PUMP TEST MENU

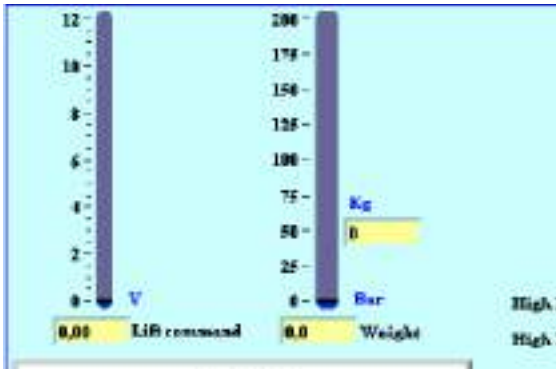


Following items appear in Pump menu front panel:

- Voltage on lift command circuit
- Hydraulic lift circuit pressure
- Pump motor current : you can select current phase from pop-up menu
- Module temperature: you can select measure unit between °C and °F.

**Notice: temperature above 60°C is signalled by a red colour; temperature above 90°C is signalled by a flashing display.**

- Request RPM and motor speed, with an arrow signalling direction
- Motor temperature: you can select measure unit between °C and °F.

**Notice: in case of an overheating alarm, the corresponding green led becomes red.**

- Weight present on the forks
- Buzzer and electro valves output status
- Customizable input switches status
- Tilt, lift and high lift digital input status
- Encoder diagnostic leds, both for A and B

# BATTERY TEST MENU

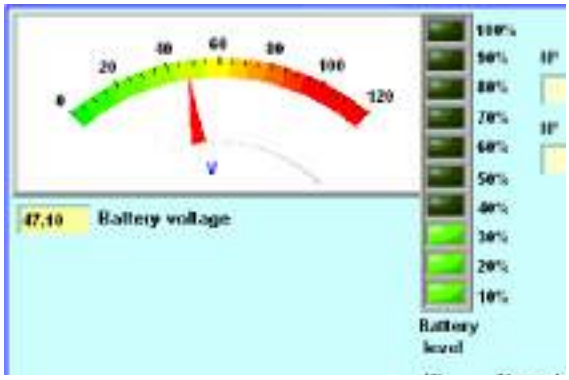


Following items appear in Battery menu front panel:

- Battery and inverter voltages
- Battery charge level
- Code, description and level of active more serious alarm for both microprocessors.

If there is more than one alarm of same level, the latest is visualized.

- There is a chronological list of latest 10 alarms, with code, description, time and temperature. First listed alarm is the first occurred.
- Temperature value is obviously referred to faulty module or faulty motor

**Notice: if there are no faulty modules or motors, this is a no meaning data field.**

With “**Reset alarms**” menu, you can reset alarm list.

-

# TIMERS TEST MENU

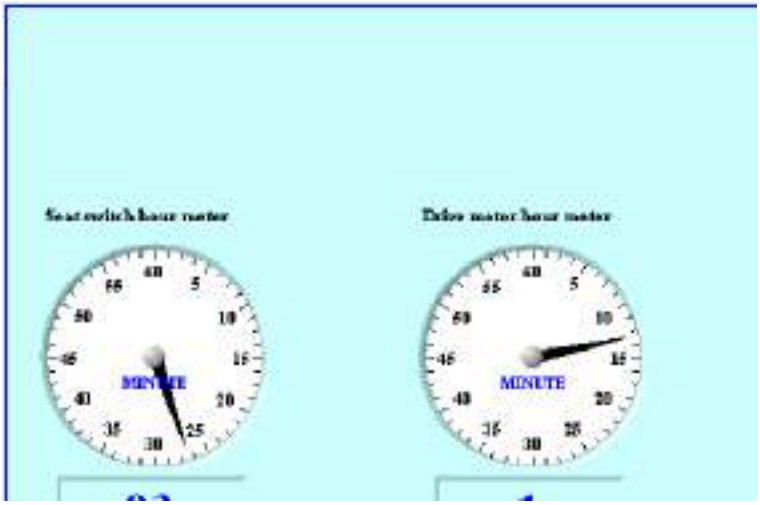


Following items appear in Timers menu front panel: total inverter working hours, drive motor and pump motor hour meter and odometer readings.

https://truckmanualshub.com/

# CALIBRATION

By a pop-up menu, you can access following calibration functions:

- “ Battery “: Battery reset voltage calibration (Fig. 16) (**)
- “ Timers “: Timers calibration (Fig. 17)
- “ Steering “: Steering sensor (Fig. 18)
- “ Pedal “: Pedal accelerator calibration (Fig. 19) (**)
- “ Lift “: Lift calibration (Fig. 20)
- “ ESH “: E/S/H parameters calibration and limits (Fig. 21, Fig. 22, Fig. 23)
- “ Steering parameters “: Steering parameters calibration (Fig. 24)
- “ Program service “:Program service interval setting (Fig. 25)
- “ Drive motor “: Drive motors parameters calibration (Fig. 26) (**)
- “ Pump motor “: Pump motors parameters calibration (Fig. 27)
- “ Critical height switches “: Speed limits calibration in case of critical height (Fig. 28)
- “ Weight sensor “: Weight sensor calibration (Fig. 29) (*)
- “ Brake sensor “: Brake sensor calibration (Fig. 30) (*)
- “ Hydro threshold “: Hydro threshold calibration (Fig. 31) (*)
- “ Cab lift “: Cab lift speed calibration (Fig. 32) (*)
- “ Truck setup “: Some lift truck parameters setup (Fig. 33) (*) (**)
- “ Pliers calibration “: Some lift truck parameters setup (Fig. 34) (*)
- “ Backing mode “: Slow mode calibration (Fig. 35) (*)
- “ Timers reset “: Timers meters reset (Fig. 36)
- “ Load eeprom “: EEPROM memory configuration (Fig. 37, Fig.38)
- “ Parameters image” : Lift truck parameters configuration (Fig. 39, Fig. 40)
- “ Hour meter calibration” : Hour meter setting (Fig. 41a, Fig. 41b) (*)

**(*): Optional menu**
**(**): Menu present in standard or optional version**

**Notice :** some of the parameters listed in test menus are not present in all applications

**Notice:** you can access all calibration menus only if in Supervisor mode and with park brake on.

https://truckmanualshub.com/

**Notice:** a confirmation is asked to quit a calibration menu without saving changes.

**Notice:** you can’t set a value out of fixed limits.
Such a case is signalled by the message “**OUT OF LIMIT**”.

**Notice:** see Appendix A to find further explanation about programmable parameters
meaning. They are listed in functional groups.

# BATTERY RESET VOLTAGE CALIBRATION (**)

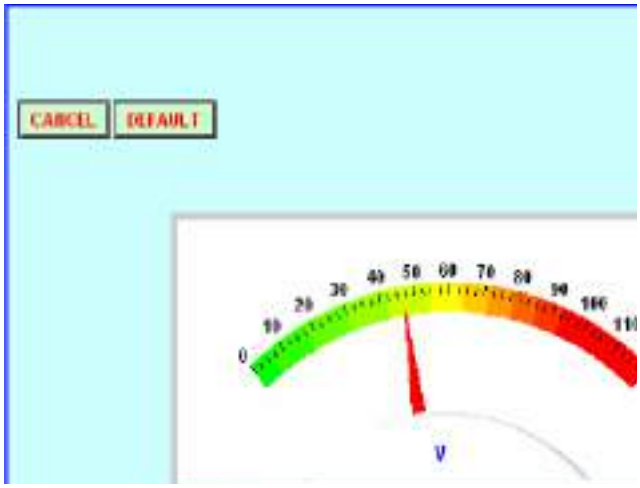


## Standard version

In that menu front panel, you can find following data about battery reset voltage: description, actual value, new value you want to set, measure unit, default value, minimum and maximum settable values.

## You can execute following operations:

**Load default value:**

1. Press DEFAULT button ; NEW data field will be automatically updated with default value
2. Press SAVE button and confirm; OLD data field too will be updated

**Change actual value:**

1. Insert changed value in NEW data field
2. Press SAVE button and confirm; in case of good result, OLD data field is updated. Otherwise an error is signaled and NEW data field initial value is restored.

**Discard changes:**

1. Press CANCEL button; initial value will be restored in NEW data field
2. Press SAVE button and confirm; OLD data field too is restored with initial value

https://truckmanualshub.com/

## Optional version

You can find a further parameter to be calibrated: discharged battery voltage; if battery voltage is less than this value, the corresponding alarm appears on display.

This parameter is visualized on front panel as battery reset value and also calibration procedure is the same.

# TIMERS CALIBRATION

In that menu front panel, you can find following data about timer parameters: description, actual value, new value you want to set, measure unit, default value, minimum and maximum settable values.

## You can execute following operations:

**Load default value:**

1. Press **DEFAULT** button; **NEW** data fields will be automatically updated with default value
2. Press **SAVE** button and confirm; **OLD** data fields too will be updated

**Change actual value:**

1. Insert changed value in **NEW** data field
2. Press **SAVE** button and confirm; in case of good result, **OLD** data field is updated. Otherwise an error is signalled and **NEW** data field initial value is restored.

**Discard changes:**

1. Press **CANCEL** button; initial values will be restored in **NEW** data fields
2. Press **SAVE** button and confirm; **OLD** data fields too are restored with initial values

# STEERING SENSOR CALIBRATION

There are following data about steering parameters: description, actual value, measure unit, default values, minimum and maximum settable values. Pressing **SAVE** button, selected parameter **VALUE** data field is updated with steering sensor actual voltage; if this value is out of permitted range, you cannot calibrate it. In such a case check for any lift truck fault.

## You can execute following operations:

**Load default value:**

Press **DEFAULT** button; **VALUE** data fields will be automatically updated with default values.

**Change parameters value:**

**Discard changes:**

Press **CANCEL** button; initial value will be restored in **VALUE** data fields

# ACCELERATOR PEDAL CALIBRATION

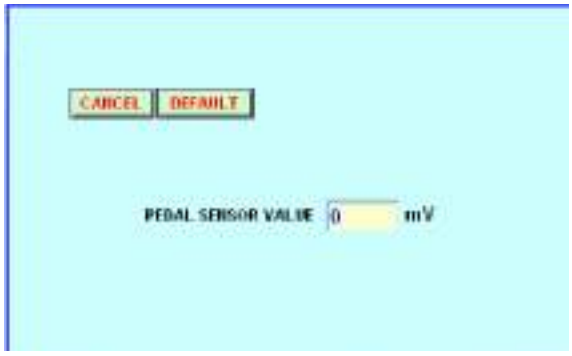


## Standard version

There are following data about accelerator parameters: description, actual value, measure unit,
default values, minimum and maximum settable values.
Pressing **SAVE** button, selected parameter **VALUE** data field is updated with pedal sensor actual voltage; if this value is out of permitted range, you cannot calibrate it. In such a case check for any lift truck fault.

## You can execute following operations:

**Load default value:**
Press **DEFAULT** button; **VALUE** data field will be automatically updated with default Value.
**Change parameters value:**

**Discard changes:**
Press **CANCEL** button; initial value will be restored in **VALUE** data fields.

If selected parameter value is out of permitted voltage range, you cannot calibrate it; in such a case check for any lift truck fault.
In this window front panel there are 3 green led, expressing actual state of forward, reverse and start switches.

https://truckmanualshub.com/

## Optional version

There is a second pedal sensor.

Calibration procedure is like standard one, except that START led present (Fig.18) turns ON only after software verifies that the voltages on both pedal sensors are equal to Vmin + 0,5 V voltage, obtained slowly pressing accelerator pedal.

# LIFT CALIBRATION

There are following data about lift parameters: description, actual value, measure unit, default values, minimum and maximum settable values. Pressing SAVE button, selected parameter VALUE data field is updated with lift sensor actual voltage; if this value is out of permitted range, you cannot calibrate it. In such a case check for any lift truck fault.

## You can execute following operations:

**Load default value:**
Press **DEFAULT** button; **VALUE** data fields will be automatically updated with default values

**Change parameters value:**

**Discard changes:**
Press **CANCEL** button; **VALUE** data fields will be restored with initial values.

# E/S/H PARAMETERS AND L1, L2 ,L3 LIMITS CALIBRATION

In that menu front panel, you can find following data about **ESH parameters**: description, actual value, new value you want to set, measure unit, default values for E, S, and H operating mode, settable per cent values for parameters in L1, L2, L3 operating mode.

## You can execute following operations:

**Select default value:**

1. Press **DEFAULT** button ; **NEW** data field will be automatically updated with default value
2. Press **SAVE** button and confirm; **OLD** data field too will be updated

**Change actual value:**

1. Insert changed value in **NEW** data field
2. Press **SAVE** button and confirm; in case of good result, **OLD** data field is updated. Otherwise an error is signaled and **NEW** data field initial value is restored.

**Discard changes:**

1. Press **CANCEL** button; **NEW** data fields will be restored with initial values
2. Press **SAVE** button and confirm; **OLD** data fields too are restored with initial values

With **E_S_H** pop-up menu present in this window, you can select one of lift truck possible energetic operating modes (Economic, Standard and High); selected operating mode default values are so loaded on characteristic parameters.

The ESH parameters calibration procedure is optional, and you can enable/disable it with the ESH button.

In any case, you can disable limits calibration section (**L1**, **L2** and **L3** parameters) with **PROGRAMMABLE WORKING** button.

If "**programmable working**" section is disabled, and you select one of L1, L2 or L3 operating modes, a message will advise user and E operating mode will be forced .

If "**programmable working**" section is enabled, pressing **MODIFY LIMITS** button you enter Fig.22 window. You can now modify per cent values for **L1**, **L2** and **L3** limits; every single data change require to be confirmed.

In that menu front panel, there are data about L1, L2 and L3 parameters: description, measure unit, modifiable values expressed in per cent, minimum and maximum settable values.

## You can execute following operation:

**Change actual value:**

1. insert new value
2. confirm

If actually selected operating mode percent values are now modified, exiting to ESH calibration menu, user can load new default values.
Every parameter per cent value is referred to High mode data.

**Notice:** You can set energetic mode also using **Compact display**. In such a case, the message in Fig. 22 appears: pressing **OK** button, parameters are updated loading new values from control board.

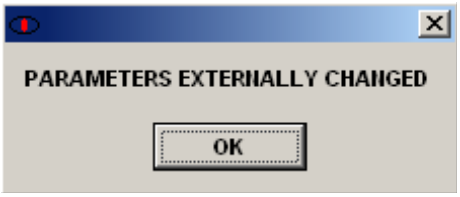

# STEERING PARAMETERS CALIBRATION

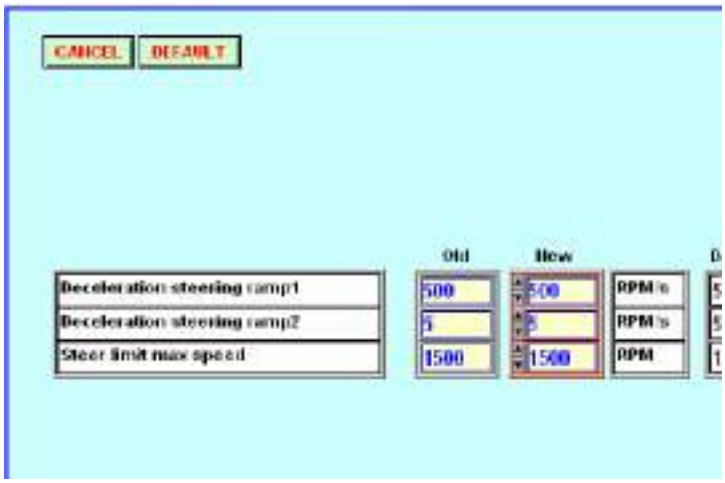


In that menu front panel, you can find following data about steering parameters: description, actual value, new value you want to set, measure unit, default values minimum and maximum settable values.

## You can execute following operations:

**Select default value:**

1. Press DEFAULT button ; NEW data fields will be automatically updated with default value.
2. Press SAVE button and confirm; OLD data fields too will be updated.

**Change actual value:**

1. Insert changed value in NEW data field
2. Press SAVE button and confirm; in case of good result, OLD data field is updated. Otherwise an error is signaled and NEW data field initial value is restored.

**Discard changes:**

1. Press CANCEL button; NEW data fields will be restored with initial values.
2. Press SAVE button and confirm; OLD data fields too are restored with initial values.

# PROGRAM SERVICE CALIBRATION

To modify assistance interval, you have to enable apposite function.

## You can execute following operations:

**Change actual value:**

1. Set button INCREASE properly to select if increase or decrease service interval
2. Change assistance interval value using HOURS INCREASE pop-up menu
3. Press SAVE AND EXIT button and confirm

# DRIVE MOTOR PARAMETERS CALIBRATION (**)

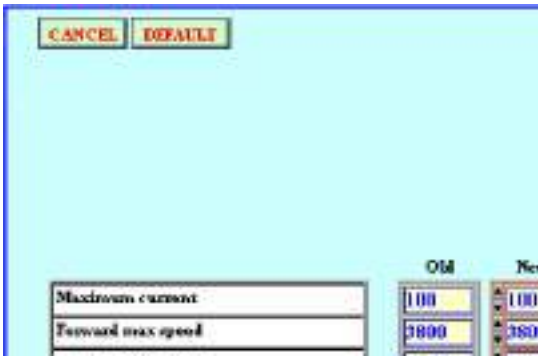


## Standard version

In that menu front panel, you can find following data about drive motor parameters: description, actual value, new value you want to set, measure unit, default values minimum and maximum settable values, actual value in percent.

## You can execute following operations:

**Select default value:**

1. Press DEFAULT button ; NEW data fields will be automatically updated with default value
2. Press SAVE button and confirm; both OLD data fields and first 3 parameters will be updated

**Change actual value:**

Insert changed value in NEW data field (or modify one of first 3 parameters)

1. Press SAVE button and confirm; in case of good result, OLD data field is updated.
2. Otherwise an error is signaled and NEW data field (or one of first 3 par.) initial value is restored.

**Discard changes:**

1. Press CANCEL button; NEW data fields will be restored with initial values
2. Press SAVE button and confirm; OLD data fields and first 3 par. are restored with initial values

**Notice:** In that menu there are other 3 parameters (Slow speed, British unit, Display brightness) that are visualized and managed in a more user friendly way.

https://truckmanualshub.com/

**Notice:** You can also choose if visualize on display one of the following:

- odometer indication
- time meter
- weight of the load on the forks ( only after weight sensor calibration )

## Optional versions

You can find further parameters to be calibrated ( they obviously depend on application): **diameter of tires, starting temperature motors fan, braking ramp, speed after stop on slope, acceleration ramp limitation, inversion ramp limitation, release ramp limitation**. These parameters are visualized on front panel after **partial release ramp** and also calibration procedure is the same.

# PUMP MOTOR PARAMETERS CALIBRATION

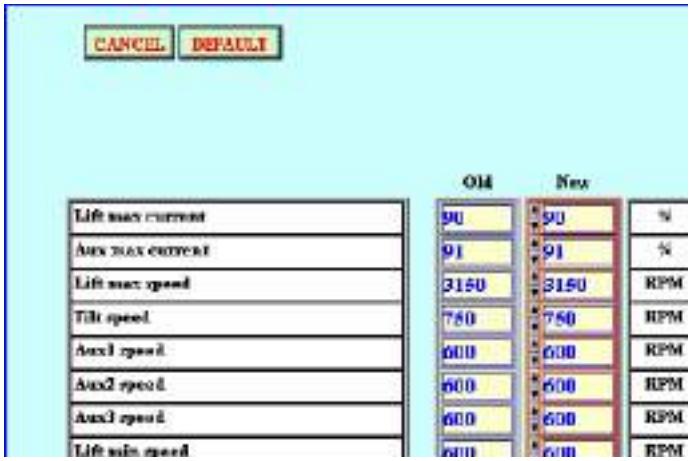


In that menu front panel, you can find following data about pump motor parameters: description, actual value, new value you want to set, measure unit, default values minimum and maximum settable values, actual value in percent.

## You can execute following operations:

**Select default value:**

1. Press **DEFAULT** button ; **NEW** data fields will be automatically updated with default value
2. Press **SAVE** button and confirm; **OLD** data fields will be updated

**Change actual value:**

1. Insert changed value in **NEW** data field
2. Press **SAVE** button and confirm; in case of good result, **OLD** data field is updated. Otherwise an error is signaled and **NEW** data field initial value is restored.

**Discard changes:**

1. Press **CANCEL** button; **NEW** data fields will be restored with initial values
2. Press **SAVE** button and confirm; **OLD** data fields are restored with initial values

# CRITICAL HEIGHT: SPEED LIMITS CALIBRATION

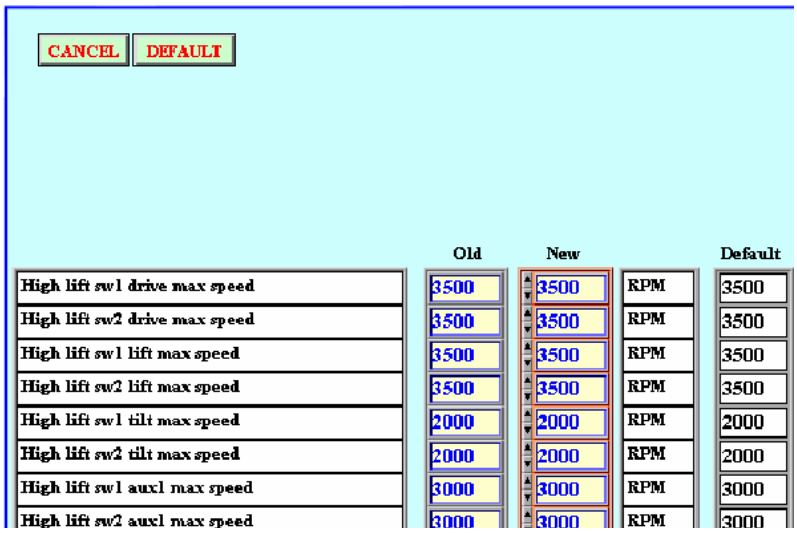


You can set maximum speed of pump and drive motors in case of a fork height superior to critical one (that condition is signalled by two switches present on lift truck forks)
In that menu front panel, you can find following data about critical maximum speeds: description, actual value, new value you want to set, measure unit, default values minimum and maximum settable values, actual value in percent.

## You can execute following operations:

**Select default value:**

1. Press DEFAULT button ; NEW data fields will be automatically updated with default value
2. Press SAVE button and confirm; OLD data fields will be updated

**Change actual value:**

1. Insert changed value in NEW data field
2. Press SAVE button and confirm; in case of good result, OLD data field is updated. Otherwise an error is signaled and NEW data field initial value is restored.

**Discard changes:**

1. Press CANCEL button; NEW data fields will be restored with initial values
2. Press SAVE button and confirm; OLD data fields are restored with initial values
3.

# WEIGHT SENSOR CALIBRATION (OPTIONAL MENU)

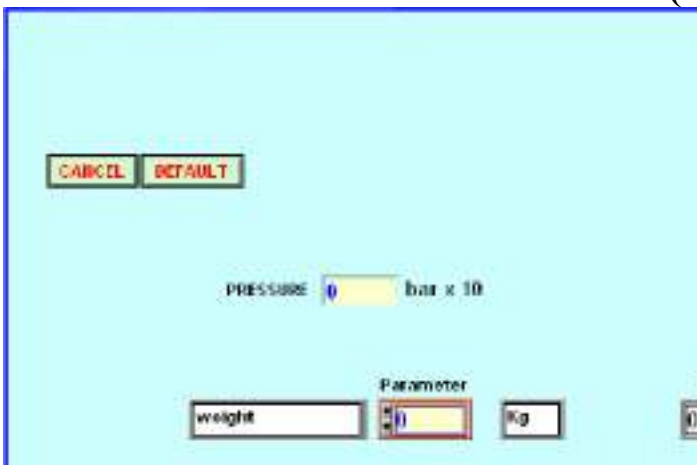


In that menu front panel, you can find following data about parameters: description, actual value, measure unit, default values, minimum and maximum settable values.
Pressing **SAVE** button, visualized pressure value is saved on actually selected parameter.

## You can execute following operations:

**Select default value:**
Press **DEFAULT** button; **VALUE** data fields will be automatically updated with default value
**Calibrate weight sensor:**

**Discard changes:**
Press **CANCEL** button; **VALUE** data fields will be restored with initial values

# BRAKE SENSOR CALIBRATION (OPTIONAL MENU)

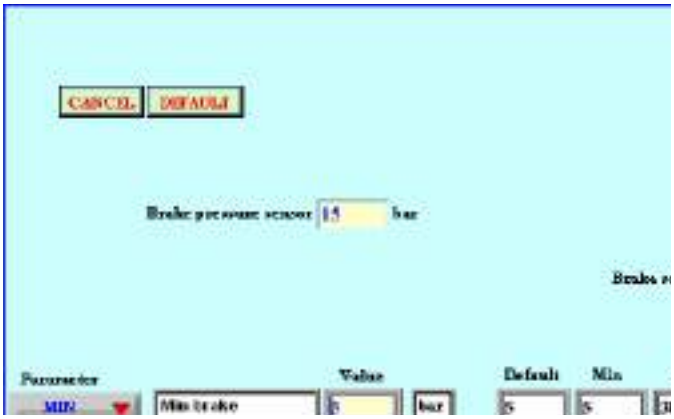


There are following data about brake pressure sensor: description, actual value, measure unit, default values, minimum and maximum settable values.

Pressing **SAVE** button, selected parameter **VALUE** data field is updated with brake sensor actual voltage; if this value is out of permitted range, you cannot calibrate it. In such a case check for any lift truck fault.

## You can execute following operations:

**Load default value:**

Press **DEFAULT** button; **VALUE** data fields will be automatically updated with default values

**Change parameters value:**

**Discard changes:**

Press **CANCEL** button; **VALUE** data fields will be restored with initial values.

# HYDRO THRESHOLD CALIBRATION (OPTIONAL MENU)

In that menu front panel, you can find following data about hydro thresholds parameters: description, actual value, new value you want to set, measure unit, default values minimum and maximum settable values. First threshold fixes rpm value that makes truck speed pass from idle speed to steering one; second threshold does vice versa.

## You can execute following operations:

**Select default value:**

1. Press **DEFAULT** button ; **NEW** data fields will be automatically updated with default value
2. Press **SAVE** button and confirm; **OLD** data fields too will be updated

**Change actual value:**

1. Insert changed value in **NEW** data field
2. Press **SAVE** button and confirm; in case of good result, **OLD** data field is updated. Otherwise an error is signaled and **NEW** data field initial value is restored.

**Discard changes:**

1. Press **CANCEL** button; **NEW** data fields will be restored with initial values
2. Press **SAVE** button and confirm; **OLD** data fields too are restored with initial values

# CAB LIFT SPEED CALIBRATION (OPTIONAL MENU)

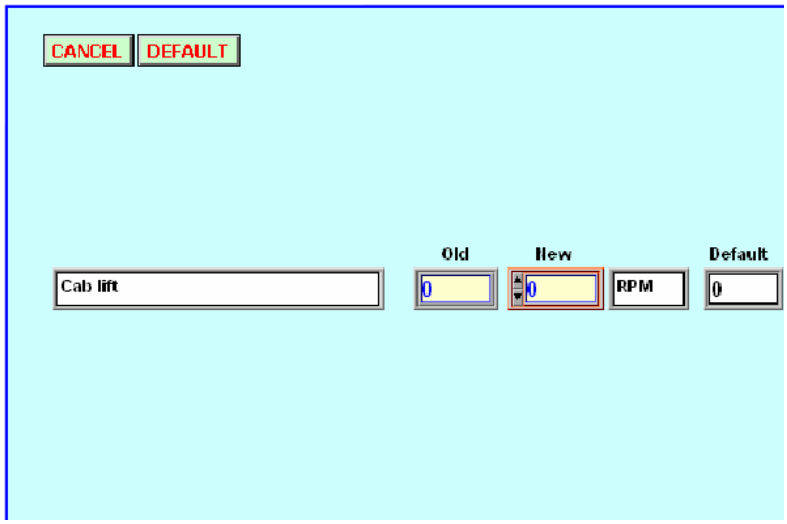


In that menu front panel, you can find following data about cab lift speed: description, actual value, new value you want to set, measure unit, default values minimum and maximum settable values.

## You can execute following operations:

**Select default value:**

1. Press DEFAULT button ; NEW data field will be automatically updated with default value.
2. Press SAVE button and confirm; OLD data field will be updated.

**Change actual value:**

1. Insert changed value in NEW data field
2. Press SAVE button and confirm; in case of good result, OLD data field is updated. Otherwise an error is signaled and NEW data field initial value is restored.

**Discard changes:**

1. Press CANCEL button; NEW data field will be restored with initial values.
2. Press SAVE button and confirm; OLD data field are restored with initial values.

# TRUCK SETUP (OPTIONAL MENU) (**)

## Standard version

In that menu front panel, you can find following data: parameters description, actual status (ON or OFF), new status you want to set, and default status.

## You can execute following operations:

**Select default value:**

1. Press DEFAULT button ; NEW data fields will be automatically updated with default status
2. Press SAVE button and confirm; OLD data fields will be updated

**Change actual value:**

1. Insert changed status in NEW data field
2. Press SAVE button and confirm; in case of good result, OLD data field is updated. Otherwise an error is signaled and NEW data field initial status is restored.

**Discard changes:**

1. Press CANCEL button; NEW data fields will be restored with initial status
2. Press SAVE button and confirm; OLD data fields are restored with initial status

## Optional version

You can find a further parameter to be calibrated: lift priority for pump reference speed. This parameter is visualized on front panel after chat time enable and also calibration procedure is the same.

# PLIERS CALIBRATION (OPTIONAL MENU) (**)

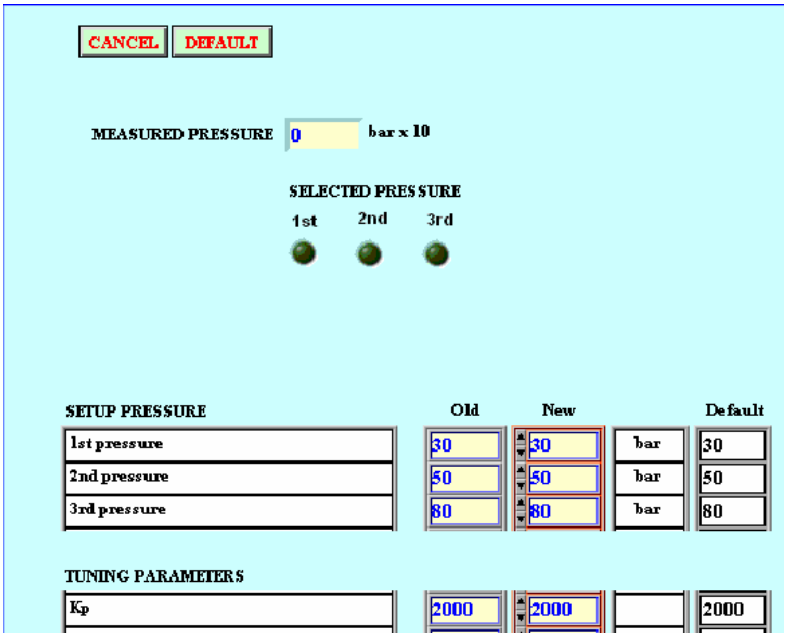


In that menu front panel, you can read actual measured value for pliers circuit pressure and know which of 1st, 2nd or 3rd setup pressure level is selected ( see three green leds).

Another green led shows if your system is working in automatic or in manual mode:

**Manual mode**: a switch present on lift truck defines the active pressure level(1st, 2nd or 3rd).

**Automatic mode**: now a serial data exchange defines the active level of pressure.

If no valid code is received, it's not possible to change active pressure level.

The selected level value is not memorized, so you lose it switching lift truck off.

In front panel appear 1st, 2nd and 3rd setup pressures new and old value, measure unit, and default, minimum and maximum settable values; the same data are visualized for 4 tuneable parameters (Kp,Kd_1,Kd_2,Kd_3).

**These parameters are used in software regulation:**

1. Proportional coefficient Kp is the same for the 3 pressure levels.
2. There are three different derivative coefficients Kd_1,Kd_2 and Kd_3 for each pressure level.

https://truckmanualshub.com/

## You can execute following operations:

**Select default value:**

1. Press DEFAULT button ; NEW data field will be automatically updated with default value.
2. Press SAVE button and confirm; OLD data field will be updated.

**Change actual value:**

1. Insert changed value in NEW data field
2. Press SAVE button and confirm; in case of good result, OLD data field is updated. Otherwise an error is signaled and NEW data field initial value is restored.

**Discard changes:**

1. Press CANCEL button; NEW data field will be restored with initial values.
2. Press SAVE button and confirm; OLD data field are restored with initial values.

# BACKING MODE PARAMETERS CALIBRATION (OPTIONAL MENU)

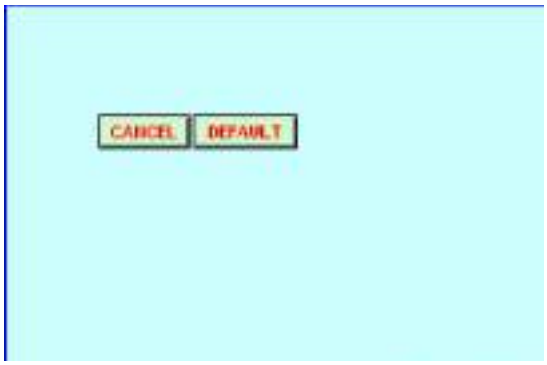


In that menu front panel, you can find following data about backing mode parameters: description, actual value, new value you want to set, measure unit, default values minimum and maximum settable values.

## You can execute following operations:

**Select default value:**

1. Press DEFAULT button ; NEW data field will be automatically updated with default value
2. Press SAVE button and confirm; OLD data field will be updated

**Change actual value:**

1. Insert changed value in NEW data field
2. Press SAVE button and confirm; in case of good result, OLD data field is updated. Otherwise an error is signaled and NEW data field initial value is restored.

**Discard changes:**

1. Press CANCEL button; NEW data field will be restored with initial values
2. Press SAVE button and confirm; OLD data field are restored with initial values.

# TIMERS RESET

In this menu (Fig. 36) you can reset timers signalling lift truck working hours; remember that if you press that button, a double confirmation is necessary.

# EEPROM RESET MENU

This menu (Fig. 37 ) has two important functions:

1. In case of Eeprom alarm, you have to use **complete EEPROM reset** procedure.
2. If you have updated flash memory software, and you want to load default Eeprom configuration, you have to use complete Eeprom reset; to maintain already calibrated values you can use **partial EEPROM reset** procedure.

**Pay attention**: using complete reset procedure you loose already calibrated values. Both procedures, in any case, don't modify timers value and alarm history.

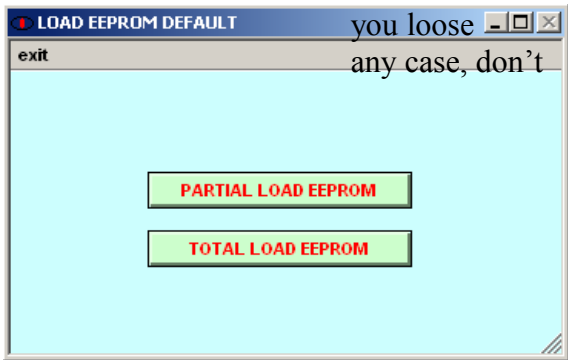


**Partial EEPROM reset:**

1. Press PARTIAL LOAD EEPROM button
2. Give a confirmation to load default values

**Complete EEPROM reset:**

1. Press TOTAL LOAD EEPROM button
2. Give a confirmation to load default values
3. Give a further confirmation (Fig. 38)

# PARAMETERS IMAGE MENU

This menu (Fig. 39) is used to configure a certain number of lift trucks using the same main important parameters. In the front panel, you can find parameters description and their actual value (OLD field).

## You can execute following operations:

**Save actual configuration:**

1. Select EXPORT menu from menu bar
2. Select destination path and configuration file name in the dialog box; then press OK button

**Load saved configuration:**

1. Select **IMPORT** menu from menu bar
2. Select location path and file name in the dialog box; then press **OK** button
3. You find now three new items (see fig. 40):
   - **NEW** values (the ones present in configuration file)
   - **MATCH** list, to show unvaried values (a light green led )
   - **SELECTION** list, to choose parameter to be loaded (all selected by default)
4. Press **UPDATE** button to load configuration file if selection is correct; otherwise press **ABORT** button to exit without saving

# HOUR METER SETTING MENU (OPTIONAL MENU)

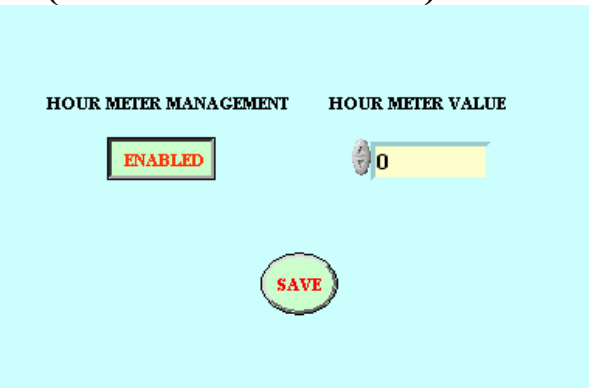


This menu (Fig. 41) is used to adjust hour meter value.

## You can execute following operations

1. You have to enable hour meter management pressing **ENABLE/ DISABLE** button (Fig. 41a).
2. You can now access hour meter value field and adjust its value (Fig. 41b).
3. Then you can save new value pressing **SAVE**.

# DATA LOGGING

With this menu (Fig. 42) you can save on file the values of a certain number of variables with a certain frequency.

The resulting file, **logging.out**, is saved in <**EYEPLUS PATH**>**EYEPLUS**\out directory.

This file format is:

**FIRST ROW**: name of **NMAX** variables to be saved followed by saving date and time;

**SUCCESSIVE ROWS**: **NMAX** recorded values separated by space.

## Data acquisition procedure is following:

1. Select **Nmax** , the number of variables you want to save
2. Select the variables whose value you want to record, with apposite pop-up menu
3. You can modify sampling period, expressed in seconds.
4. Pressing **START** button, saving procedure begins; in that phase you can't modify acquisition parameters

During acquisition procedure (Fig. 43), following data are visualized:

- A led signals saving instant
- Indication of number of saved frames
- Flashing message SAVING...

To stop saving procedure you can press **START** button, or simply exiting the menu.

# FLASH PROGRAMMING

## OVERVIEW

As explained before (refer to chapter 3), when user programs flash memory, EYEPLUS software loads proper files pointing a directory named as lift truck model itself, thanks to the presence of **"Truckmodel.ini**" configuration file in EYEPLUS installation directory.

**Truckmodel.ini** file lists all available truck models with their main characteristics (obviously this file has to be upgraded if new lift truck models are introduced).
To make an example, these are some lines of **Truckmodel.ini** configuration file:

0 C:\Source_SME\Source_TRZ_FILE\model0 model0 lift truck
1C:\Source_SME\Source_TRZ_FILE\model1 model1 lift truck
2 C:\Source_SME\Source_ONE_FILE\model1 model2 lift truck
……
6 C:\Source_SME\Source_DRV_FILE\model3 model3 lift truck
……
9 C:\Source_SME\Source_SNG_FILE\model4 model4 lift truck

**Number** = identifies lift truck model; the number corresponds to numeric code present in source filename xx-xx-xx xxXX.xxx0 (this value is read also from panel memory and used to customize automatically EYEPLUS menus)

**Directory** = each model has its own linked directory which contains source files

**Motor system** = this code defines if your truck is a single or twin motor system and corresponds to source filename xx-xx-xx xxxx.XXX0 code (TRZ or DRV for twin motor systems, ONE or SNG for single motor systems)

**Lift Truck model** = this is the name operator reads from list box when he has to select the lift truck model (see after).

## SOURCE FILES AUTOMATIC UPGRADE PROCEDURE

Moreover, SME company has developed an **utility** whose purpose is to automatically install or upgrade source files to correct destination path.

Suppose, for example, to be connected to a model1 lift truck; the executable program is named **Source _ softwaredate_ model1.exe**, so user knows exactly which software version (**softwaredate**) he will load on panel flash memory.
Running that utility, **C:\Source_SME\Source_TRZ_FILE\model1** directory will be created (if it doesn't exist) and new **softwaredate**.TRZ0 and **softwaredate**.PMP0 files will be copied in it.
Old source files will be moved to **C:\Source_SME_old\Source_TRZ_FILE\model1** directory (automatically created) and so, in case of need, they are anyway available.

## PROCEDURE FOR LIFT TRUCK MODEL SELECTION

With new source files, operator can upgrade main controller software, selecting **FLASH** item from EYEPLUS menu-bar ( first of all disable active commands).
We distinguish case of flash already programmed from case of blank memory:

## CASE OF FLASH MEMORY CORRECTLY PROGRAMMED

If user now tries to program model1lift truck following window (Fig. 44) will appear:

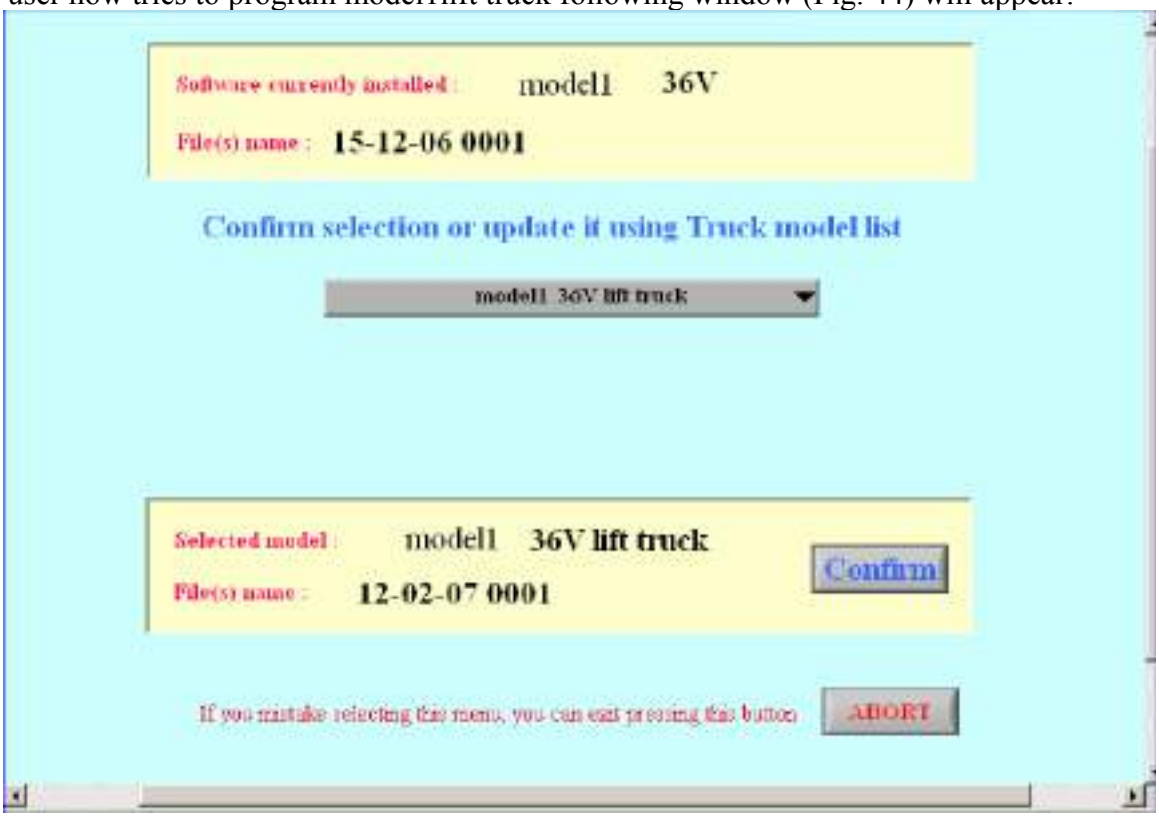

EYEPLUS software (see page before) identifies automatically truck model as model1 36V, and shows file (filename is 15-12-06-0001) currently installed in main board flash memory. Automatically selection list box points model136V lift truck model and user can see source file (filename is 12-02-07-0001) present now in C:\Source_SME\Source_TRZ_FILE\model1 Now user can confirm selection with **Confirm** button, or select another lift truck model as in the following window (Fig. 45)

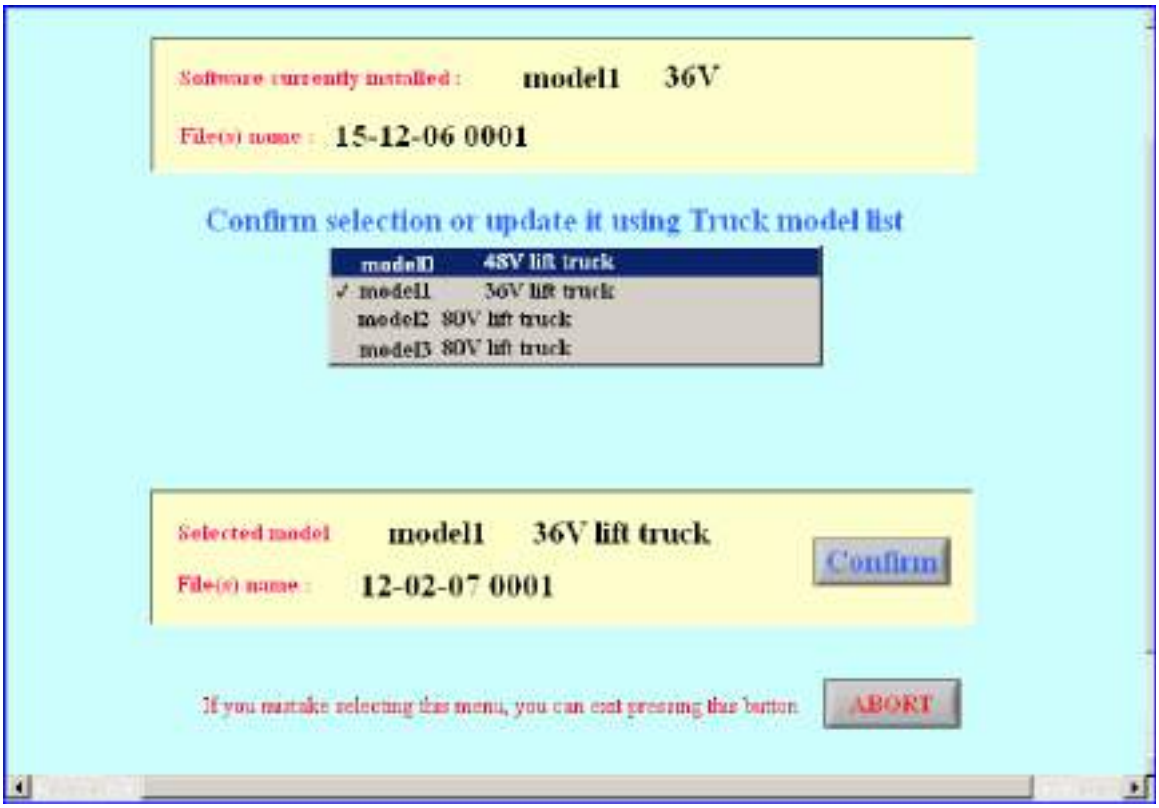

Suppose operator decides to select a model0 48V truck model instead of the current model1 36V, EYEPLUS shows in the field near confirm button, source filename (15-02-07-0000) present in directory relative to 48V lift truck model C:\Source_SME\Source_TRZ_FILE \model0 (Fig.46)

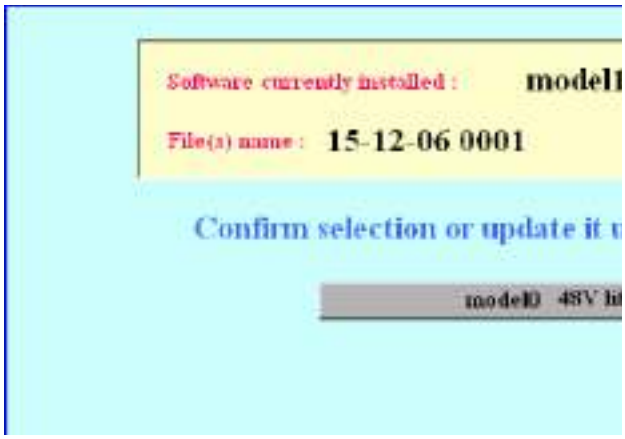


User can now confirm selection with confirm button, or in any case of error, he can exit without changing model pressing abort button .

**Notice:** To prevent mistakes, when operator is connecting to a single drive motor system, in selection list box are accessible only single drive models and obviously, in case of twin motor systems only twin drive models.

# CASE OF PANEL BLANK

Starting **EYEPLUS** application, in case of flash memory not programmed, in main menu front panel **"PANEL BLANK**" message is visualized, and following window (Fig. 47) automatically appears :

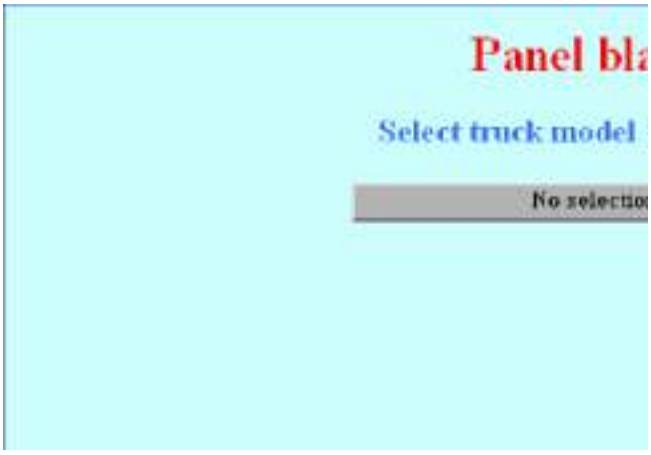

Initially no model is selected, and no filename is visualized.

Operator can now choose lift truck model from selection list box as in the picture below (Fig. 48).

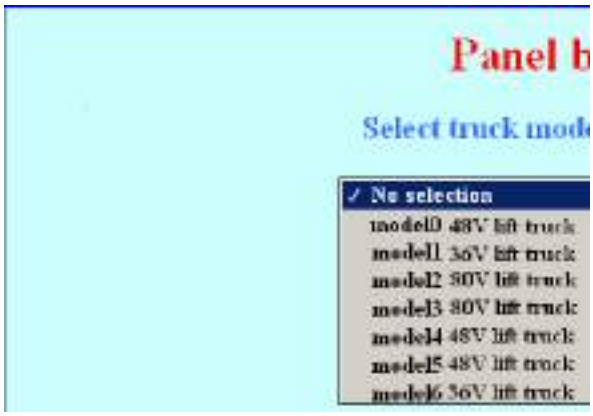


Once operator has selected a lift truck model (for example model1, see Fig,49), confirm button appears and you can read filename present in source directory corresponding to selected model.

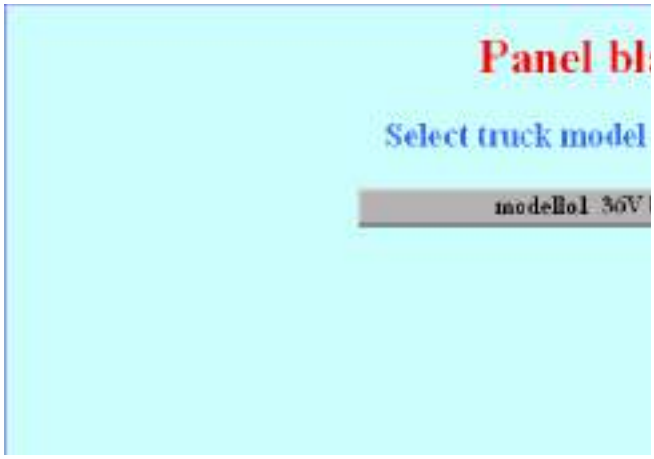


User can't enter main menu until a selection is made pressing Confirm button.

**Notice**: Remember that flash memory is blank: no information about model is present on main board, and you can't verify if your selection is correct (all single and twin drive motor systems available are listed in selection list box of Fig. 48).

In such a case a human error is possible, so take care you are doing the correct selection.

In fact, after selecting truck model and entering main menu, you could load wrong file into control board ( i.e. if you've selected a twin motor system while your lift truck is a single drive motor system).

## PROGRAMMING PHASE

Once selected truck model (model0, for example), EYEPLUS software points proper files in C:\Source_SME\Source_TRZ_FILE\model0 directory and flash programming phase can start (Fig,50).

User can read source directory and filename in Flash menu front panel, to be sure he selected the proper model \ source file.

1. In case of troubles with source files present in C:\Source_SME\Source_TRZ_FILE \model0 directory (missing files, wrong version,...) there will be an error message and flash memory will not be programmed .
2. After a synchronization phase, micro1 (drive) flash programming will start; a bar gives the percent indication of already programmed memory.
3. In case of problems with serial communication, there will be an error message and flash programming phase will be stopped..
4. After traction micro successful programming, begins micro2 (pump) programming phase.
5. A message will signal the end of programming phase, and its result.

**Notice:** In case of single drive motor systems step 3 and step 4 will not be executed.

**Notice:** Both in case of single and twin motor systems, if programming phase fails after synchronization, panel has to be programmed with correct software before being used; see troubleshooting section in case of any error

# TROUBLESHOOTING

## GENERALITY

Often you can solve problems reading error messages and following suggestions.

## SOFTWARE INSTALLATION

In case of failed EYEPLUS software installation, follow these steps:

- Verify if your PC complies minimal requirements
- Be sure of having PC administrator rights
- Close all active applications and disable antivirus before installation
- Verify installation, step by step

In case of successful installation, if application has a runtime error:

- Verify if your PC complies minimal requirements
- Turn off PC and try again after turning it on
- Uninstall and install again EYEPLUS software

## SERIAL COMMUNICATION

If application doesn't work and message "**not connected**" appears:

- Verify system ground connections
- Verify if inverter panel works correctly
- Control serial connection cable: you must use a shielded one
- Verify if serial port works correctly
- Use Setup menu to verify serial port configuration
- Verify no other applications are using serial port

## FLASH PROGRAMMATION

If panel programming phase fails, when you try to load source files:

- Verify if c:\source_file or c:\source_one_file directory exists
- Verify if that directory contains the correct source files
- Be sure that source files are the ones provided by S.M.E.

If you program memory successfully, but inverter doesn't work correctly:

- Be sure that source files are the ones provided by S.M.E

In case of transmission error:

- Verify system ground connections
- Control serial connection cable: you must use a shielded one
- Verify if serial port works correctly
- Verify if there are any active commands

## OTHER PROBLEMS

Application works slowly or doesn't work properly :

- Verify if your PC complies minimal requirements

Text and "objects" on main panel are not centred:

- Verify if your PC complies minimal requirements
- Don't modify window size

Monitor doesn't display correctly text and "objects"

- Verify if monitor refresh frequency is at least 75Hz
- Verify if your PC complies minimal requirements

## **Appendix A:** programmable parameters meaning

**Programmable parameters** are here listed in functional groups.

The possibility of interfacing by PC with the system allows to have an exhaustive real time analysis of the system working and of the condition of its components; moreover, you can choose among a wide range of parameters in order to reach the optimum operating of the system in compliance with your needs.

### DRIVE MOTOR

| PARAMETER NAME | PARAMETER NAME |
|---|---|
| Drive acceleration ramp | Lift truck acceleration with accelerator pedal pressed |
| Drive release ramp | Lift truck deceleration with accelerator pedal released |
| Drive inversion ramp | Lift truck deceleration in inversion |
| Pedal brake ramp | Lift truck deceleration with pedal brake pressed |
| Drive limitation maximum speed | Maximum lift truck speed with speed limitation (turtle active) |
| Forward maximum speed | Maximum forward lift truck speed with no speed limitation (no alarms present and turtle not active) |
| Reverse maximum speed | Maximum reverse lift truck speed with no speed limitation (no alarms present and turtle not active) |
| Creep speed | If the truck speed is greater then this threshold, the speed reference becomes a parabolic function of the accelerator potentiometer voltage. |
| Steer limitation maximum speed | Maximum speed reference in the angle in which the internal wheel is mechanically still. |
| Drive maximum current | Drive motors maximum current (expressed in per cent of high energetic mode value) |
| Partial release ramp | Parameter that softens the drive inversion ramp if the traction motors are working with low rpm |
| E-S-H enable | If this parameter is set to 1, it is possible to change the value of the power mode with the display |
| Slow speed | If parameter is set to1, speed limitation is active; otherwise lift truck speed is managed as usual. |
| British unit | If parameter is set to 1, values are expressed in British unit, otherwise in international ones. |
| Time meter / odometer / weight of the load on the forks on display | If parameter value is 0, display shows the hour meter.<br>If parameter is set to 1, odometer indication appears .<br>If parameter value is 2, display shows weight on the forks . |

### DRIVE MOTOR

| PARAMETER NAME | PARAMETER NAME |
|---|---|
| High lift switch 1 drive maximum speed | Max. lift truck speed when the forks are above the1st critical height |
| High lift switch 2 drive maximum speed | Max. lift truck speed when the forks are above the 2nd critical height |
| Diameter of drive tyres | This parameter gives drive tyres diameter measure (expressed in mm) |
| Limitation temperature | If a motor temperature is above this value, acceleration, inversion, release ramps and max torque are reduced in function of temperature value . |
| Starting motors fan temperature | If the motor temperature exceeds this threshold the motors fans are activated |
| Maintenance time inserting enable | If parameter is set to 1 program service function is enabled |
| Maintenance time | If the truck working hours exceed this value the display signals the maintenance request |

## Timers

| PARAMETER NAME | PARAMETER NAME |
|---|---|
| Seat switch delay | Time interval between seat switch opening and drive and pump motors stopping |
| Hydro time | Time interval when pump motor works (with hydro speed) after the end of a command |
| Chat time | Time delay between last command given to a drive or pump motor and chat mode signalling |
| Stop on slope time | If operator stops on slop, after this time interval lift truck begins to slowly move |

# PUMP MOTOR

| PARAMETER NAME | PARAMETER NAME |
|---|---|
| Minimum lift speed | Minimum lift speed |
| Maximum lift speed | Maximum lift speed |
| Tilt speed | Pump motor speed with speed function active |
| Lateral shift (AUX 1 function) speed | Pump motor speed with lateral shift function (1st auxiliary) active |
| AUX 2 function speed | Pump motor speed with 2nd auxiliary function active |
| AUX 3 function speed | Pump motor speed with 3rd auxiliary function active |
| Pump acceleration ramp | Lift acceleration |
| Pump deceleration ramp | Pump motor deceleration after the end of a command |
| Hydro speed | Pump motor speed when steering |
| Hydro idle speed | Pump motor speed with direction command lever not in neutral, accelerator pressed and no pump command active |
| Lift maximum current | Pump motor maximum current with lift function active |
| Auxiliary maximum current | Pump motor maximum current with lift lever released |
| High lift switch 1 lift maximum speed | Max. lift speed when the forks are above the1st critical height |
| High lift switch 2 lift maximum speed | Max. lift speed when the forks are above the 2nd critical height |
| High lift switch 1 tilt maximum speed | Max. tilt speed when the forks are above the1st critical height |
| High lift switch 2 tilt maximum speed | Max. tilt speed when the forks are above the 2nd critical height |
| High lift switch 1 AUX1 function max. speed | Max. side shift speed when the forks are above the1st critical height |
| High lift switch 2 AUX1 function max. speed | Max. side shift speed when the forks are above the 2nd critical height |
| High lift switch1 AUX2 function max .speed | AUX2 function speed when the forks are above the 1st critical height |
| High lift switch 2 AUX2 function max. speed | AUX2 function speed when the forks are above the 2nd critical height |

PUMP MOTOR

| PARAMETER NAME | PARAMETER NAME |
|---|---|
| High lift switch1 AUX3 function max. speed | AUX3 function speed when the forks are above the 1st critical height |
| High lift switch 2 AUX3 function max. speed | AUX3 function speed when the forks are above the 2nd critical height |
| Lift priority for speed reference | In case of simultaneous activation of lift and any other pump function if parameter is set to 1, pump motor works at auxiliary function speed; if parameter value is set to 0, pump motor works at lift speed |

## SENSORS AND POTENTIOMETERS

| PARAMETER NAME | PARAMETER NAME |
|---|---|
| Accelerator pedal minimum value | Accelerator sensor voltage with pedal released |
| Accelerator pedal maximum value | Accelerator sensor voltage with pedal completely pressed |
| Lift sensor minimum value | Lift sensor voltage with lift lever released |
| Lift sensor middle value | Lift lever potentiometer voltage to which the lifting becomes proportional to the shift of the lever |
| Lift sensor maximum value | Lift sensor voltage with lift lever completely pressed |
| Steering sensor minimum value | Steering sensor voltage with wheels turned on left |
| Steering sensor middle value | Steering voltage with wheels straight ahead |
| Steering sensor maximum value | Steering sensor voltage with wheels turned on right |
| Weight of the load on the forks [kg] | This parameter is used to calibrate lift sensor to calculate the weight of load present on forks |
| No load pressure [bar · 10] | This parameter is used to calibrate lift sensor to calculate the weight of load present on forks |
| Load pressure [bar · 10] | This parameter is used to calibrate lift sensor to calculate the weight of load present on forks |

## BATTERY

| PARAMETER NAME | PARAMETER NAME |
|---|---|
| Battery reset value | Minimum battery voltage necessary to reset battery discharged voltage alarm |
| Discharged battery voltage | If the battery voltage becomes lower than this value the battery discharged alarm is set |

# ALARM LIST

## Maximum battery voltage

- Eye alarm code: 1
- Alarm level: 1
- Alarm cause: battery voltage, measured by a circuit inside control unit, exceeds following levels:

  63 V, in case of systems working at 36 V

  63 V, in case of systems working at 48 V

If the controller detects such a fault, refer to following troubleshooting procedure:

1. such an alarm can be caused also by the presence of regeneration currents; when lift truck is on release or reverse braking ramp, motors work as generators, and battery voltage can exceed overvoltage limit. In a case like that, the battery condition should be verified ( if the battery is new it is necessary to do some charge-discharge cycles before reaching the rating declared by the constructor) or has a high internal resistance. If the case is the second and it is not possible to change the battery, the solution may be to reduce the release and reverse braking ramp.
2. incorrect wiring to battery positive or negative terminals.
3. verify if battery is still in good conditions.
4. replace the control board .

## Minimum battery voltage

- Eye alarm code: 2
- Alarm level: 1
- Alarm cause: battery voltage, measured by an internal circuit, is lower than following levels :

  24 V , in case of systems working at 36 V

  24 V , in case of systems working at 48V

In case of minimum battery voltage alarm, follow these steps:

1. incorrect wiring to battery, or corroded positive or negative terminals;
2. verify battery conditions: if the electrolyte inside is partially exhausted, an under voltage alarm can sometimes be detected from the controller; even in case of low battery charge (<10%), high current rates (i.e. both pump and drive motors working in full load conditions) could cause an under voltage alarm, in particular in presence of an exhausted battery.
3. replace the control board .

## Pedal trimmer fault

- Eye alarm code: 3
- Alarm level: 2
- Alarm cause: voltage measured on accelerator circuit exceeds the value calculated averaging calibration and reachable voltages; moreover, start switch seems to be open.

In case of such an alarm, follow these troubleshooting steps :

1. verify if the potentiometer initial set-up is correct; if not, repeat calibration procedure .(You can use both PC with serial communication software and COMPACT display).
2. verify if the following 68 ways connector terminals are correctly wired to their correspondent inputs in potentiometer circuit:

   K1-11 (12 V)
   K1-15 (ground)
   K1-10 (pedal input)
3. in case of correct wiring, replace the potentiometer itself.
4. replace control board

## Eeprom alarm

- Eye alarm code: 5
- Alarm level: 1
- Alarm cause: eeprom does not work properly, or one of memorised values is out of correct limits.

In case of alarm follow this procedure:

1. load default values for eeprom variables, both using PC with serial communication software and COMPACT display;
2. replace the control board .

## Pre-charge capacitors low voltage alarm (Capacitors not charged)

- Eye alarm code: 6
- Alarm level: 1
- Alarm cause: voltage level of pre-charge capacitors is less than 70 % of nominal battery level.It could happen, in example, if the inverter is working with main breaker open. Capacitors voltage decreases cause energy spent to keep motors in motion.

In case of alarm follow this procedure:

1. verify if main breaker coil and power terminals are in good conditions;
2. verify if supply lines power fuse is damaged;
3. verify if main breaker coils are correctly wired to their correspondent inputs :

   K1-18 (positive terminal)

   K1-19 (negative terminal)
4. replace main breaker;
5. replace control board.

## Inverter desaturation or overcurrent alarm

- Eye alarm code: 8 for right drive motor power module

  24 for pump motor power module

  25 for left drive motor power module
- Alarm level: 1
- Alarm cause: actual current exceeds limits 929 A

In case of alarm follow this procedure:

1. With such an alarm present when you turn on lift truck, disconnect the power cable between the malfunctioning inverter and the corresponding motor (first, turn off the system, of course).

If turning lift truck on again, alarm is not active, then:

1. replace the cable connecting control board and inverter.
2. replace the inverter;
3. replace control board.

If turning lift truck on again, alarm is active, then :

1. replace the inverter;
2. replace the motor.

## Inverter capacitors pre-charge too fast

- Eye alarm code: 9
- Alarm level: 1
- Alarm cause: pre-charge capacitors voltage increases too fast when you turn the system on.

In case of too fast pre-charge alarm, follow this procedure:

1. replace main breaker.
2. replace cable connecting the CN1 output of the control board with the corresponding inverter;
3. replace the inverter connected with the CN1output of control board
4. replace control board

## Pump motor inverter overtemperature

- Eye alarm code: 10
- Alarm level: 6
- Alarm cause: the inverter temperature (measured with a temperature probe), exceeds 100 º C, or is inside [95 ºC, 100 ºC] range at least 30 s.

In case of alarm follow this procedure:

1. alarm could be caused by ineffective temperature dissipation.
2. Verify thermal coupling between inverter block and aluminium plate, and between aluminium plate and truck ballast. The presence of a correct amount of thermal grease in the coupling is essential to ensure an efficient heat exchange;
   replace cable connecting the output CN4 of the control board to the pump inverter;

3. if temperature readings seem too high in function of total time interval of lift truck using, replace pump inverter causing the alarm. You can read temperature measures using “COMPACT” display or “EYE” communication software.
4. replace main board.

## Capacitors too charged on start

- Eye alarm code: 11
- Alarm level: 1
- Alarm cause: when you turn on the system, capacitors are not completely discharged by pump motor. In fact, if you turn suddenly on the lift truck, after a turning off, capacitors voltage level is too high. You have to discharge them before checking the presence of any fault (both of capacitors and of main board)

In case of alarm follow this procedure:

1. verify the correctness of wiring from pump motor and relative inverter;
2. replace cable connecting the output CN4 of the control board with the corresponding inverter;
3. replace the inverter connected to CN4 output of the control board;
4. verify if main breaker has stuck closed terminals: in such a case replace it;
5. replace the cable connecting the output CN1 of the main board to the right drive motor inverter: a defective cable could give a wrong measure for capacitors voltage;
6. replace the right drive inverter;
7. replace main board.

## Low battery alarm

- Eye alarm code: 12
- Alarm level: 3
- Alarm cause: battery voltage level is lower than minimum charge value expected, referred to table 2 (for 36V system) and table 3 (for 48V system) in COMPACT display user manual.

In case of low battery alarm, follow this procedure:

1. measure battery voltage with a tester and, if different from the value reported on COMPACT display, replace main board;
2. otherwise recharge battery.

## Drive motor overtemperature

- Eye alarm code: 13 for right drive motor
  19 for left drive motor
- Alarm level: 5
- Alarm cause: The measure of drive motor temperature exceeds 155 ºC..

In case of alarm, follow this procedure:

Presence of alarm with cold motors:

1. with a handheld multimeter (in resistance operating mode) you have to measure a resistance of about 10 kohm between the two wires of the temperature probe ( execute the measure at ambient temperature of 25°C).
   If the measure is not correct it is necessary to replace the temperature probe.
2. disconnect the temperature probe and check the wiring insulation between signal wire and ground wire (towards control board);
3. replace control board.

Presence of alarm with hot motors:

1. If temperature value (you can read it from display or via PC) seems correct, verify if the motor stator case are clean

## Pump motor overtemperature

- Eye alarm code: 14
- Alarm level: 6
- Alarm cause: The measure of pump motor temperature exceeds 155 ºC .

In case of alarm follow this procedure:

Presence of alarm with cold motors:

1. with a handheld multimeter in resistance operating mode, you have to measure about 10kohm at ambient temperature of 25°C between the two wires of the temperature

probe. If the measure is not correct it is necessary to replace the temperature probe.

2. disconnect the temperature probe and check the wiring insulation between signal wire and ground wire (towards control board);
3. replace control board.

Presence of alarm with hot motors:

1. If temperature value (you can read it from display or via PC) seems correct, verify if the motor stator case are clean

## Motor current offset alarm

- Eye alarm code: 15 for right drive motor
  16 for left drive motor
  36 for pump motor
- Alarm level: 1
- Alarm cause: non-zero phase currents when you turn lift truck on.

In case of motor current offset alarm, follow this procedure:

1. replace the cable connecting the malfunctioning inverter to control board.
2. replace inverter.
3. replace main board.

## Main breaker fault

- Eye alarm code: 17
- Alarm level: 1
- Alarm cause: overcurrent on main breaker coil.

In case of alarm follow this procedure:

1. replace main breaker
2. replace control board .

## Watchdog timer alarm

- Eye alarm code: 18
- Alarm level: 1

- Alarm cause: improper communication between DSPs on control board, or/and defective control board.

In case of alarm follow this procedure:

1. using EYE program interface, try to program control board flash memory;
2. replace control board .

## Drive motor inverter overtemperature

- Eye alarm code: 20 for right drive motor
  22 for left drive motor
- Alarm level: 5
- Alarm cause: inverter temperature, measured with a probe, exceed 100 ºC , or is inside [95 ºC, 100 ºC] range at least 30 s.

In case of alarm follow this procedure:

1. alarm could be caused by ineffective temperature dissipation; verify thermal coupling between inverter block and aluminium plate and between aluminium plate and truck ballast. The presence of the correct amount of thermal grease in the coupling are essential to ensure a correct heat exchange;
2. replace cable connecting the output CN1 ( for right drive motor) or CN2 ( for left drive motor) of the control board to the corresponding inverter;
3. if temperature readings seem too high in function of total time interval of lift truck using, replace inverter unit causing the alarm. You can read temperature measures using “COMPACT” display or “EYE” communication software.
4. replace control board.

## Serial communication alarm

- Eye alarm code: 21
- Alarm level: 1
- Alarm cause: error in serial communication between the two DSP; DSP present on main board make a mutual software control, to insure fast diagnosis of such a fault.

In case of alarm follow this procedure:

1. program pump and drive DSP again; maybe software present in flash memory was corrupted.
2. replace control board.

## Alarm on 5 V encoder voltage

- Eye alarm code: 37
- Alarm level: 1
- Alarm cause: Main board K1-14 terminal (5 V output) voltage is lower than 4.3 V.

In case of alarm follow this procedure:

1. verify if 5 V output is grounded, cause an incorrect encoder wiring.
2. verify if 5 V output is grounded, cause any encoder malfunction.
   In that case, replace the defective one.
3. replace control board.

## Alarm on 12 V output voltage

- Eye alarm code: 38
- Alarm level: 1
- Alarm cause: Main board K1-12 terminal (12 V output) voltage is lower than 10.5 V.

In case of an alarm on 12 V output voltage, follow this procedure:

1. verify if 12 V output is grounded, cause an incorrect wiring to:
   - Accelerator potentiometer
   - Steering sensor
   - buzzer
   - display
2. replace defective device;
3. replace control board.

## Pump motor commands active on start

- Eye alarm code: 50
- Alarm level: warning; while the fault condition is active, all pump motor functions (except hydro functions) are inhibited.
- Alarm cause: you find a pump motor command active when you turn your system on.

In case of alarm follow this procedure:

1. before starting to operate, turn off any active command (both levers and switches);
2. be sure that lift, tilt and auxiliary command switches, are not active;
3. replace control board.

## Seat switch open on start

- Eye alarm code: 63
- Alarm level: warning; main breaker is opened and pump and drive motors are stopped.
- Alarm cause: when you start working, you find seat switch open, or, after the main breaker is closed, the seat switch remains opened for at least “ seat switch delay” s.

In case of alarm follow this procedure:

1. verify if seat switch is defective;
2. replace control board.

## Wrong start

- Eye alarm code: 64
- Alarm level: warning; main breaker is opened and pump and drive motors are stopped.
- Alarm cause: when you start working, you find accelerator pedal pressed or a forward/ reverse switch active.

In case of alarm follow this procedure:

1. verify if a switch was active or the pedal pressed, when you turn on the lift truck;
2. verify if start, forward or reverse switches are stuck close;
3. verify if pedal circuit voltage exceeds 1/3 its maximum range (measured in Volt);
4. replace control board.

## Encoder alarm

- Eye alarm code: 74 (for right drive motor encoder)
  75 (for left drive motor encoder)
- Alarm level: 1
- Alarm cause: an encoder channel is disconnected, and motor is working.

In case of alarm follow this procedure:

1. Verify if the encoder is correctly connected to:
   - Motor itself
   - Ground : K1- 15 terminal
   - + 5 V: K1- 14 terminal
   - A channel: K1- 37 terminal (for right drive motor encoder)
     K1- 17 terminal (for left drive motor encoder)
   - B channel: K1- 36 terminal (for right drive motor encoder)
     K1- 16 terminal (for left drive motor encoder);
2. if correctly wired, replace the encoder;
3. replace control board.

## Alarm of motor thermal probe

- Eye alarm code: 77 (for right drive motor thermal probe)
  78 (for left drive motor thermal probe)
  79 (for pump motor thermal probe).
- Alarm level: 7
- Alarm cause: Temperature difference between any two of the 3 motors results greater than 70 ºC

In case of alarm, follow this procedure:

1. verify if the wiring is correct;
2. replace the probe;
3. replace control unit.