TIGER TRUCK

CHAMP UTILITY VEHICLE

Parts Catalog

100 Tiger Drive ~ Poteau, Oklahoma 74953

Tel (866) 688-1778 ~ Fax (918) 649-3732 ~ www.tigertruck.com

Contents

Figure	Description	Page
Fig. 1	Engine and Transmission Assy.	1
Fig. 2	Cylinder Head	3
Fig. 3	Cylinder Head Side Case	5
Fig. 4	Cylinder Block	7
Fig. 5	Oil Pan	9
Fig. 6	Engine Mounts	11
Fig. 7	Crankshaft & Piston	13
Fig. 8	Valve Train	15
Fig.9	Timing Components	17
Fig. 10	Intake Manifold	19
Fig. 11	Engine Ignition & Relays	21
Fig. 12	Starter (manual transmission)	24
Fig. 13	Alternator	26
Fig. 14	Distributor	29
Fig. 15	Clutch	31
Fig. 16	Intake Manifold	33
Fig. 17	Throttle Body	35
Fig. 18	Oil Pump	37
Fig. 19	Water Pump	39
Fig. 20	Manual Transmission	41
Fig. 21	Transmission Case	44
Fig. 22	Gear Shifter Lever Case	46
Fig. 23	Emission Control	48
Fig. 24	Fuel Pump	50
Fig. 25	Fuel Tank	52
Fig. 26	Air Filter Housing	54
Fig. 27	Exhaust & Muffler System	56

Tiger Truck

Contents

Figure	Description	Page
Fig. 28	Radiator	58
Fig. 29	Gear Shifter	60
Fig. 30	Drive Shaft	62
Fig. 31	Rear Axle	64
Fig. 32	Differential Gear	67
Fig. 33	Frame	70
Fig. 34	Front Suspension	72
Fig. 35	Rear Suspension	74
Fig. 36	Front Axle	76
Fig. 37	Front Axle & Brake	78
Fig. 38	Tire & Wheel	81
Fig. 39	Tire Carrier	83
Fig. 40	Steering Wheel	85
Fig. 41	Steering System	87
Fig. 42	Pedal & Pedal Bracket	89
Fig. 43	Master Cylinder	91
Fig. 44	Brake Reservior	93
Fig. 45	Brake Pipe	95
Fig. 46	Parking Brake & Cable	97
Fig. 47	Battery	99
Fig. 48	Speedometer & Halifax	101
Fig. 49	Head Lamp & Turn Signal	103
Fig. 50	Front Fog Lamp	105
Fig. 51	Rear Tail Lamp & License Plate Lamp	107
Fig. 52	Body Wiring Harness	109
Fig. 53	Chassis Wiring Harness	111
Fig. 54	Combination Switch & Electrical Controls	113

Tiger Truck

Contents

Figure	Description	Page
Fig. 55	Ignition Switch & Door Locks	115
Fig. 56	Radio & Antenna	117
Fig. 57	Tool Kit	119
Fig. 58	Body Panel	121
Fig. 59	Body Suspension	124
Fig. 60	Console	126
Fig. 61	Mud Flap	128
Fig. 62	Inner Garnish & Weather Strip	130
Fig. 63	Floor Mat	132
Fig. 64	Front Bumper	134
Fig. 65	Wiper Motor & Wiper Blades	136
Fig. 66	Windshield Washer	138
Fig. 67	Windshield & Rear Glass	140
Fig. 68	Front Hood	142
Fig. 69	Front Fender	144
Fig. 70	Door Panel & Inner Garnish	146
Fig. 71	Door Window & Regulator	148
Fig. 72	Door Handles & Locks	150
Fig. 73	Rear Door	152
Fig. 74	Rear Door Handles & Latches	154
Fig. 75	Front Seats	156
Fig. 76	Rear Seat	158
Fig. 77	Rear View Mirror & Sun Visor	160
Fig. 78	Seat Belt	162
Fig. 79	Dash Board	164
Fig. 80	Ventilator	167
Fig. 81	Intake Case	169

Contents

Figure	Description	Page
Fig. 82	Heater	171
Fig. 83	Heater Control Valve	173
Fig. 84	Cargo Bed	175
Fig. 85	Accelerator Cable	178
Fig. 86	Front Brake ASM	180
Fig. 87	Rear Brake ASM	182
Fig. 88	Automatic Transmission	184
Fig. 89	Flex Fuel System	185

Tiger Truck

FIGURE 1 ENGINE & TRANSMISSION ASM

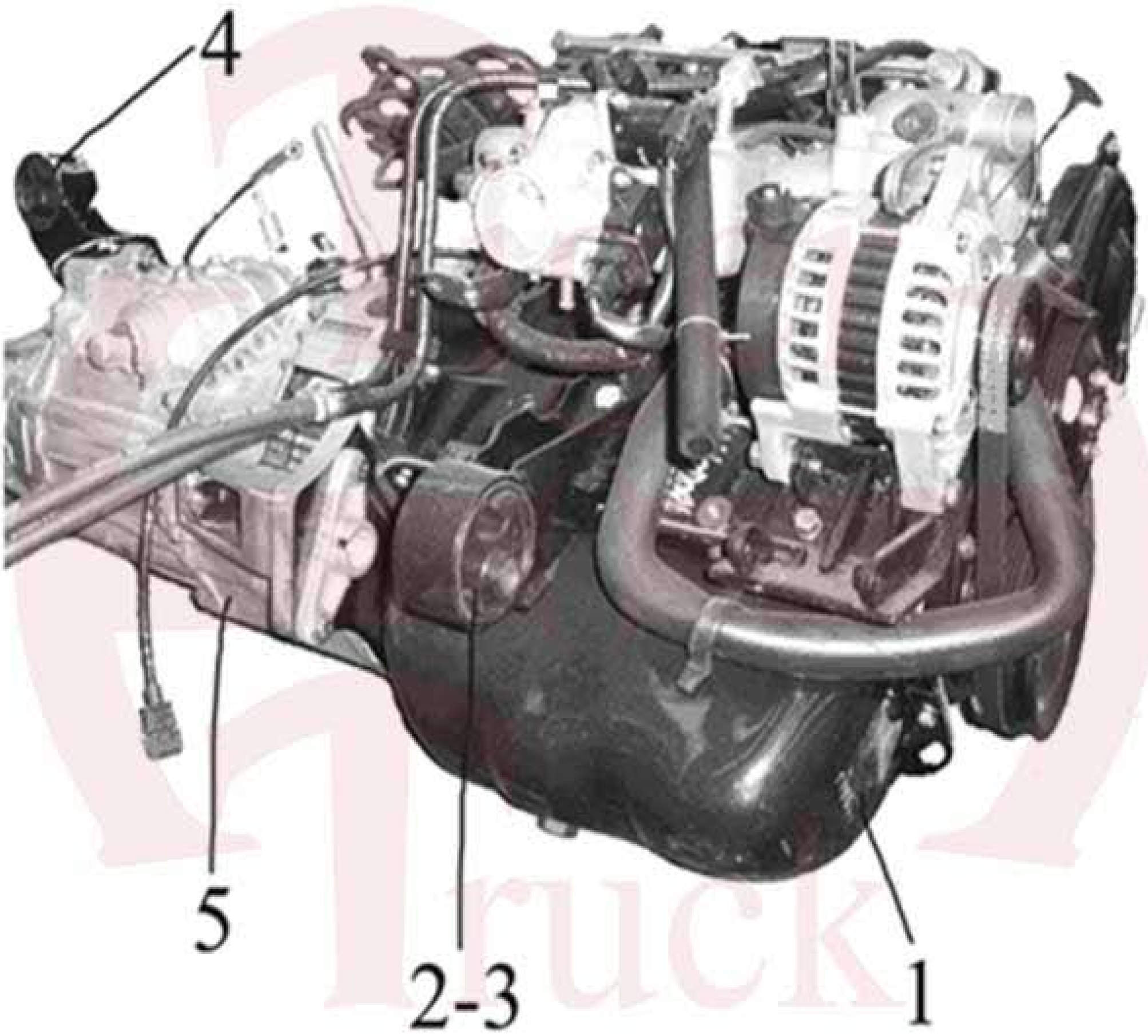

FIGURE 1 ENGINE & TRANSMISSION ASM

NO	DESCRIPTION	PART NO.	ALL	SINGLE CAB	CREW CAB	NOTE
1	ENGINE ASM	JL465Q5	1			
2	MOTOR MOUNT LH	CK1000110N1	1			
3	MOTOR MOUNT RH	CK1000120N1	1			
4	REAR SUSPENSION BRACKET	CK1000130N1	1			
5	TRANSMISSION ASM (5-SPEED)	CK1700100N1	1			
5	TRANSMISSION ASM (AUTOMATIC)	28-3001 (SEE FIG. 88)	1			

FIGURE 2 CYLINDER HEAD

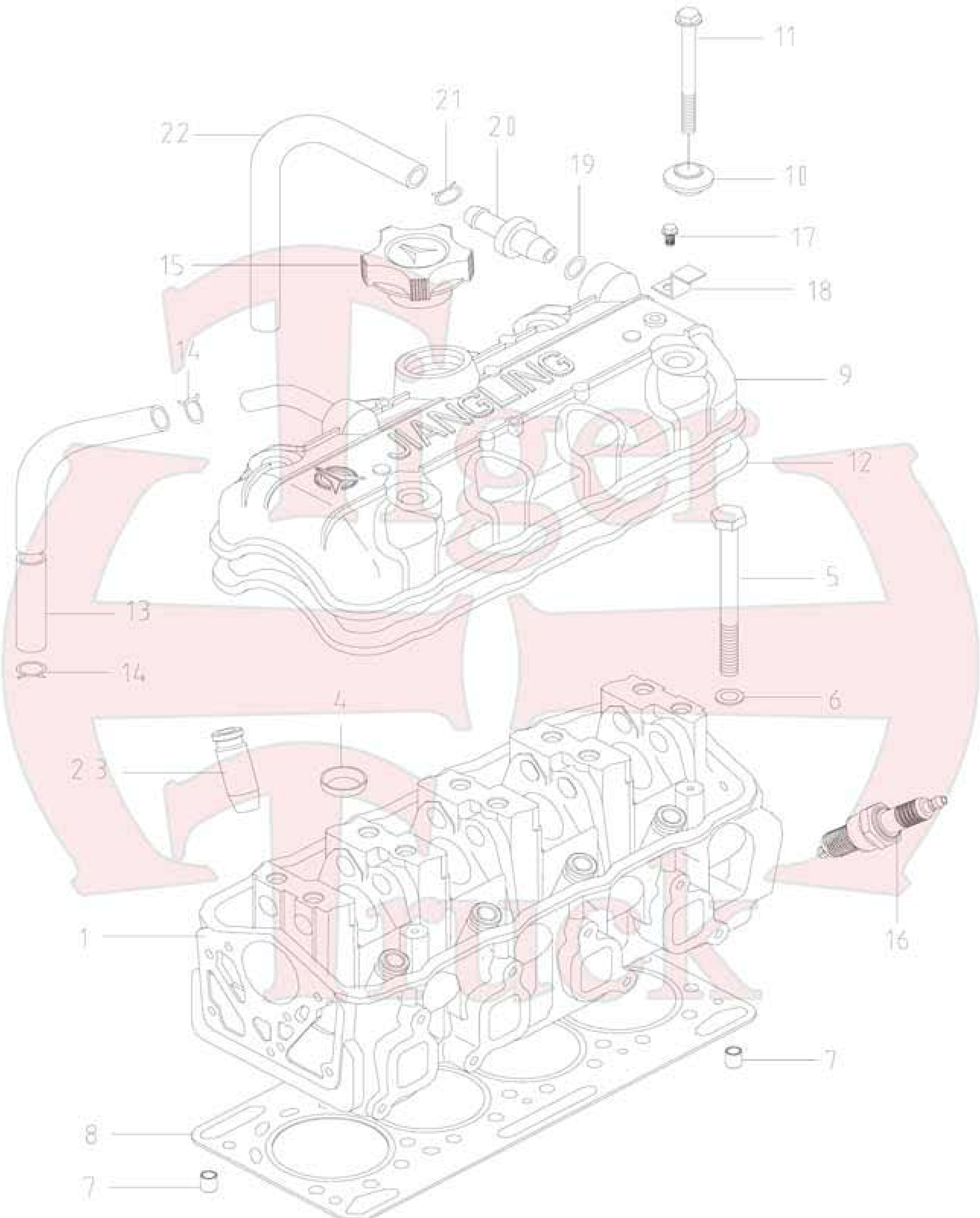

FIGURE 2 CYLINDER HEAD

NO	DESCRIPTION	PART NO.	ALL	SINGLE CAB	CREW CAB	NOTE
1	CLINDER HEAD	1003010A1	1			
2-3	VALVE GUIDE INT/EXH	1003013D	8			
4	PLUG	1003016D	4			
5	BOLT	1000031D	10			
7	KNOCK PIN	1000028D2	2			
8	CYLINDER HEAD GASKET	1003070A2	1			
9	CYLINDER HEAD COVER	1003050A8	1			
10	WASHER	1000061D	4			
11	BOLT	1000059D	4			
12	CYLINDER HEAD COVER SEAL	1003064D-B1	1			
13	BREATHER HOSE	1014109A9	1			
15	OIL FILTER CAP	1003060-01	1			
16	SPARK PLUG	3707600D	4			
19	PVC VALVE SEAL	1014013-01	1			
20	PVC VALVE	1014020-01	1			
22	PVC HOSE	1014112A8	1			

Tiger Truck

FIGURE 3 CYLINDER HEAD SIDE CASE

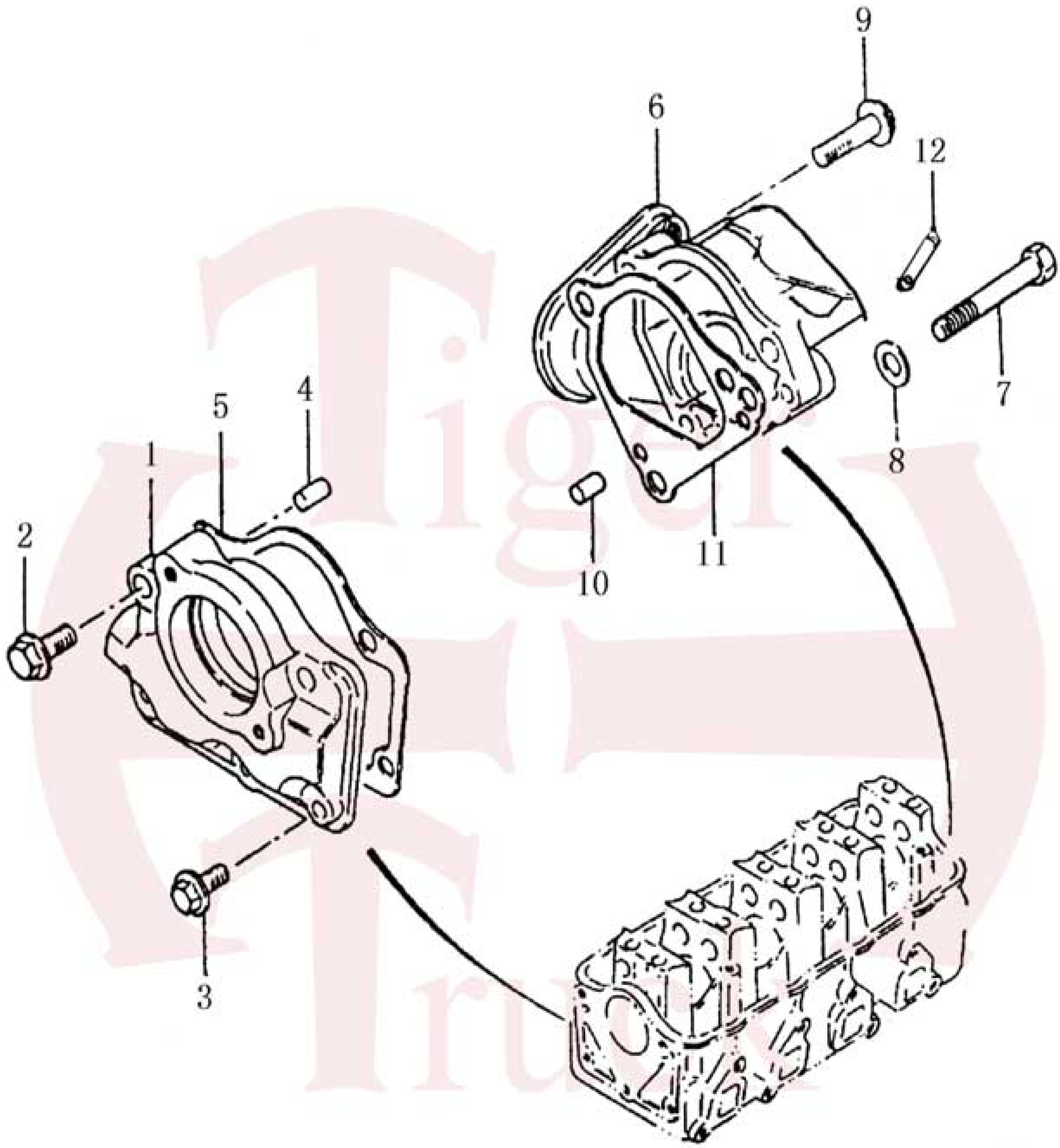

FIGURE 3 CYLINDER HEAD SIDE CASE

NO	DESCRIPTION	PART NO.	ALL	SINGLE CAB	CREW CAB	NOTE
1	CYLINDER HEAD CASE	1000128D	1			
2	BOLT/ WASHER	GB/T5783-200-M8	3/3			
3	BOLT/ WASHER	GB/T5783-2000-MX20 GB/T859-1987-6	2/2			
4	KNOCK PIN	1000122D	2			
5	SIDE CASE GASKET	1000123D	1			
6	DISTRIBUTOR CASE	1000038A1	1			
7	BOLT	GB/T5782-2000-M8-60	1			
8	WASHER	TB/T848-1985-8	1			
9	BOLT/ WASHER	GB/T5783-2000-M8X30 GB/T848-1985-8	2/2			
10	KNOCK PIN	1000122D	2			
11	DISTRIBUTOR CASE GASKET	1000035D	1			
12	CLAMP	1000012D	1			

Truck

FIGURE 4 CYLINDER BLOCK

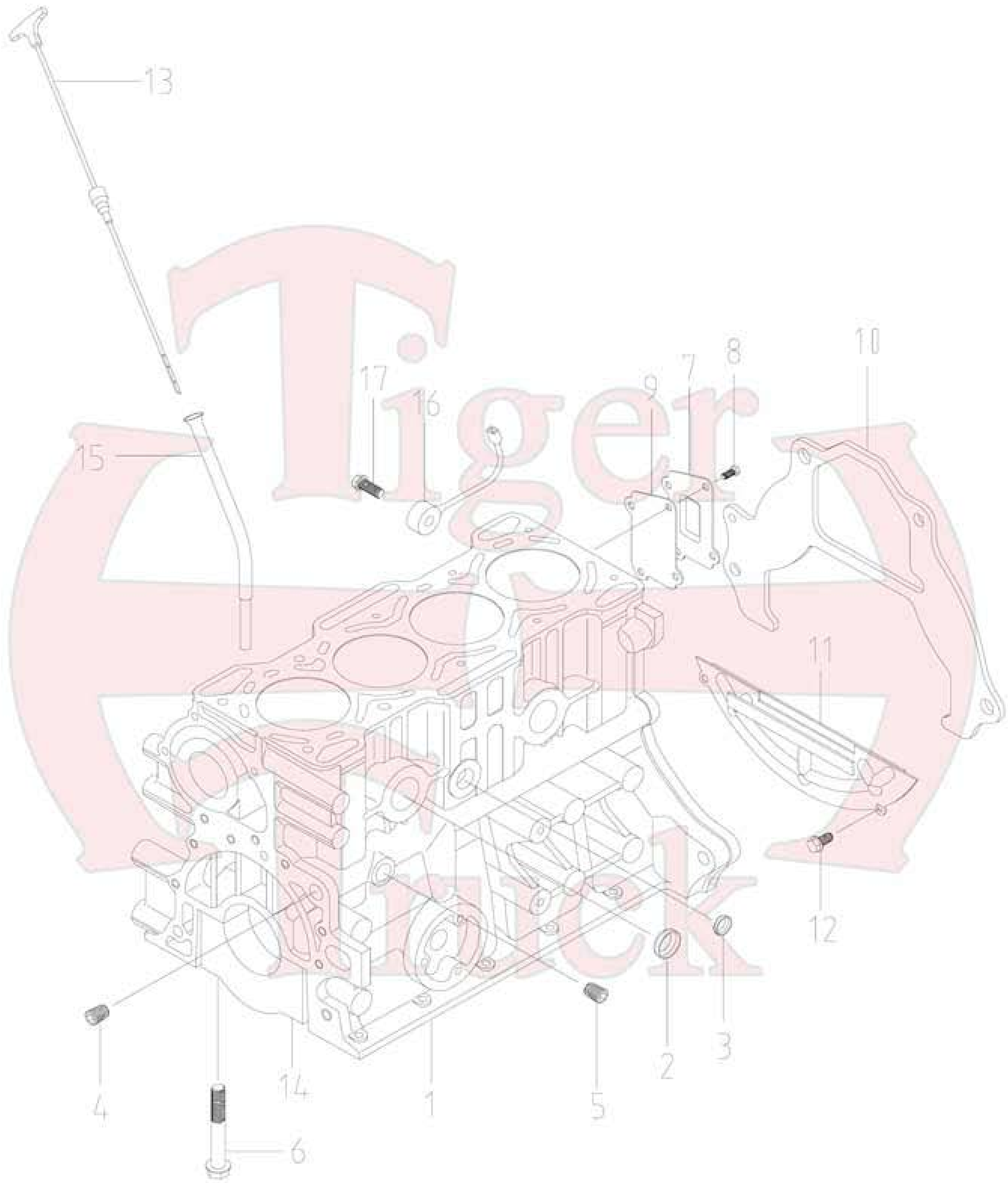

FIGURE 4 CYLINDER BLOCK

NO	DESCRIPTION	PART NO.	ALL	SINGLE CAB	CREW CAB	NOTE
1	CYLINDER BLOCK	1002010A10	1			
	COMPLETE ENGINE	JL465Q5	1			
2	PLUG	1002012D	3			
3	PLUG	1003016D	2			
4	OIL GALLERY PLUG Z-1/4	1011011D	3			
5	OIL GALLERY PLUG Z-1/8	1002032D	1			
6	MAIN CAP BOLT	1002019D	10			
7	CYLINDER BLOCK PLATE	1002027D	1			
8	BOLT/ WASHER	GB/T5786-2000-M6X20	8			
9	PLATE GASKET	1002028D	1			
10	CLUTCH HOUSING UPPER PLATE	1000097D	1			
11	CLUTCH HOUSING LOWER PLATE	1701149D	1			
12	BOLT/ WASHER	GB/T5783-2000-M6X10	2			
13	OIL DIPSTICK	1002050A8	1			
14	CRANKSHAFT MAIN CAP NO.1	1002017D	1			
	CRANKSHAFT MAIN CAP NO.2	1002016D	1			
	CRANKSHAFT MAIN CAP NO.3	1002015D	1			
	CRANKSHAFT MAIN CAP NO.4	1002014D	1			
	CRANKSHAFT MAIN CAP NO.5	1002013D	1			
15	OIL DIPSTICK TUBE	1000195A8	1			
16	KNOCK SENSOR	3752010B3	1			
17	BOLT	Q1860825	1			

FIGURE 5 OIL PAN

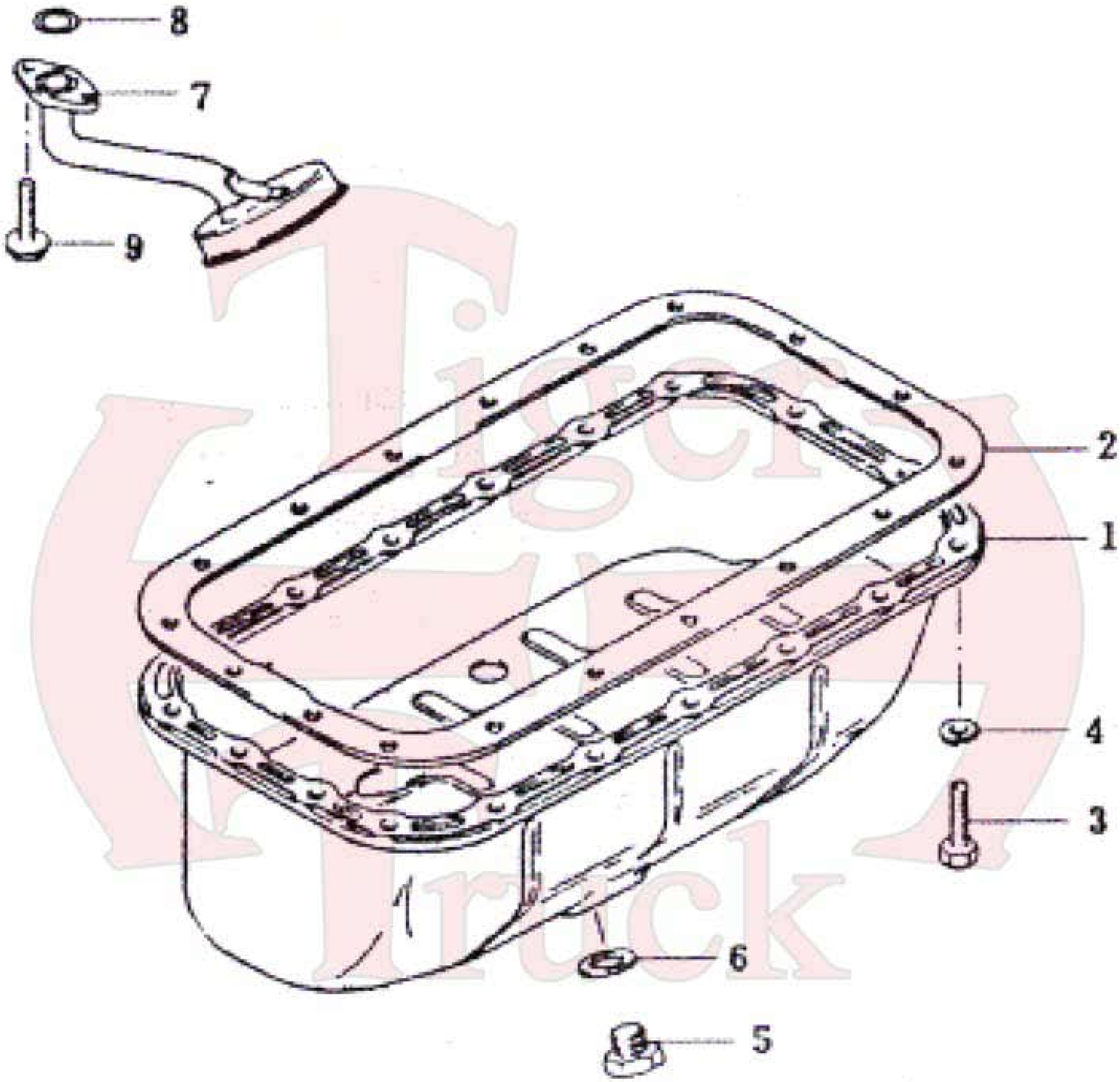

FIGURE 5 OIL PAN

NO	DESCRIPTION	PART NO.	ALL	SINGLE CAB	CREW CAB	NOTE
1	OIL PAN	1009010D	1			
2	OIL PAN GASKET	1000064D	1			
3	BOLT	GB/T5783-2000-M6X20	18			
4	WASHER	GB/T859-1987-6	18			
5	OIL DRAIN PLUG	1009018D	1			
6	OIL DRAIN PLUG GASKET	1009017D	1			
7	OIL PUMP SCREEN	1010010D	1			
8	O'RING	1002031D	1			
9	BOLT/ WASHER	GB/T5783-2000-M6X14 GB/T859-1987-6	2/2			

Tiger Truck

FIGURE 6 ENGINE MOUNTS

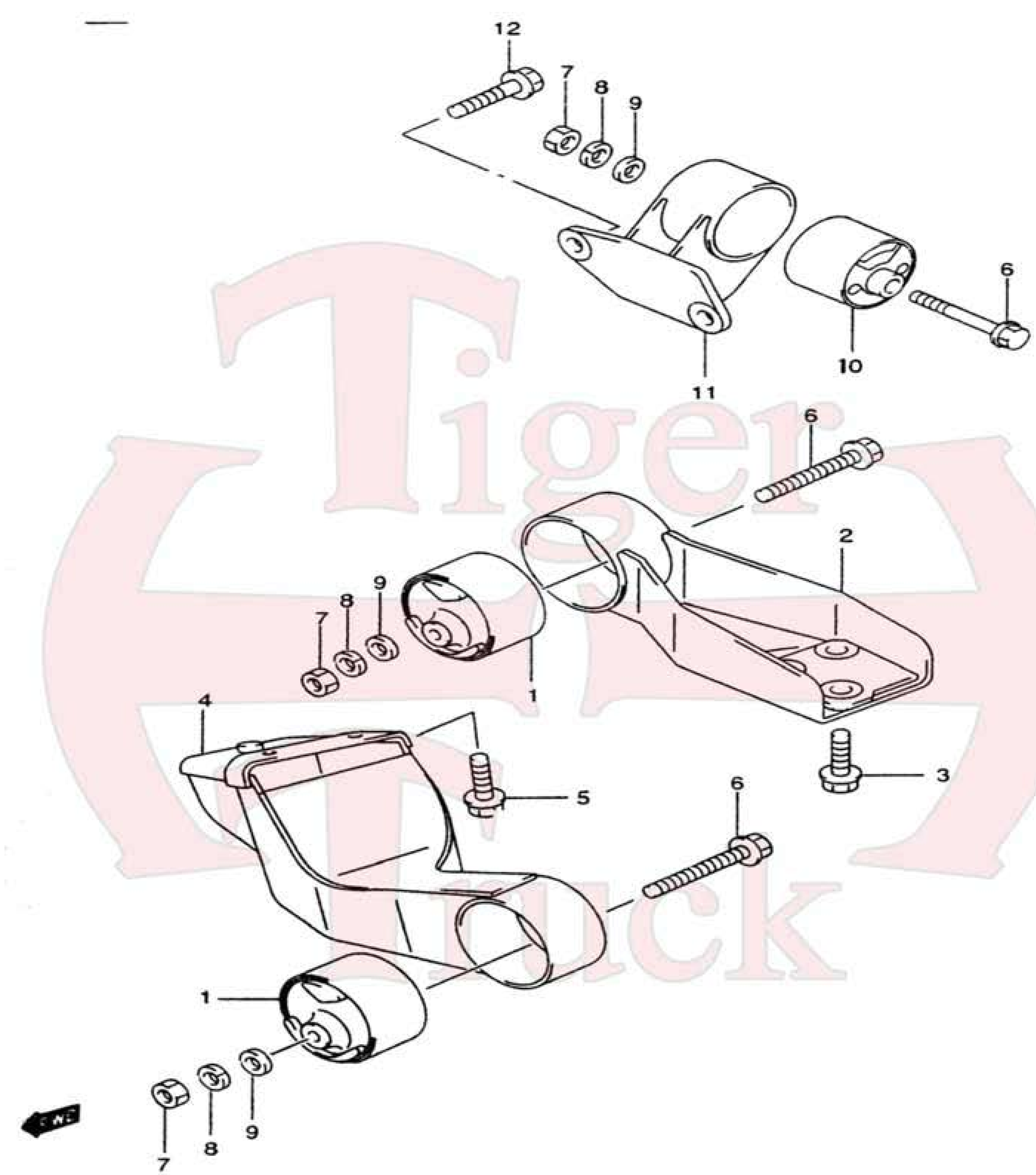

FIGURE 6 ENGINE MOUNTS

NO	DESCRIPTION	PART NO.	ALL	SINGLE CAB	CREW CAB	NOTE
1	BRACKET BUSHING	CK1000 100N1-053	2			11610-50F10
2	SUSPENSION BRACKET CUSHION RH	CK1000 120N1	1			
3	BOLT	CK1000 100N1-054	3			01550-10253
4	SUSPENSION BRACKET CUSHION LH	CK1000 110N1	1			
5	BOLT M10X90-8.8	CK1000 100N1-055	3			01550-10203
6	BOLT M10-8	GB/T5782-2000	3			
7	NUT	GB/T6170-2000	3			
8	WASHER	GB/T93-1987	3			
9	WASHER	GB/T97.1-2002	3			
10	SUSPENSION BRACKET CUSHION REAR	CK1000 100N1-056	1			11810-77A00
11	SUSPENSION BRACKET CUSHION TRANSMISSION	CK2801 480N1	1			
12	BOLT	GB/T5783-2000	3			

Tiger Truck

FIGURE 7 CRANKSHAFT & PISTONS

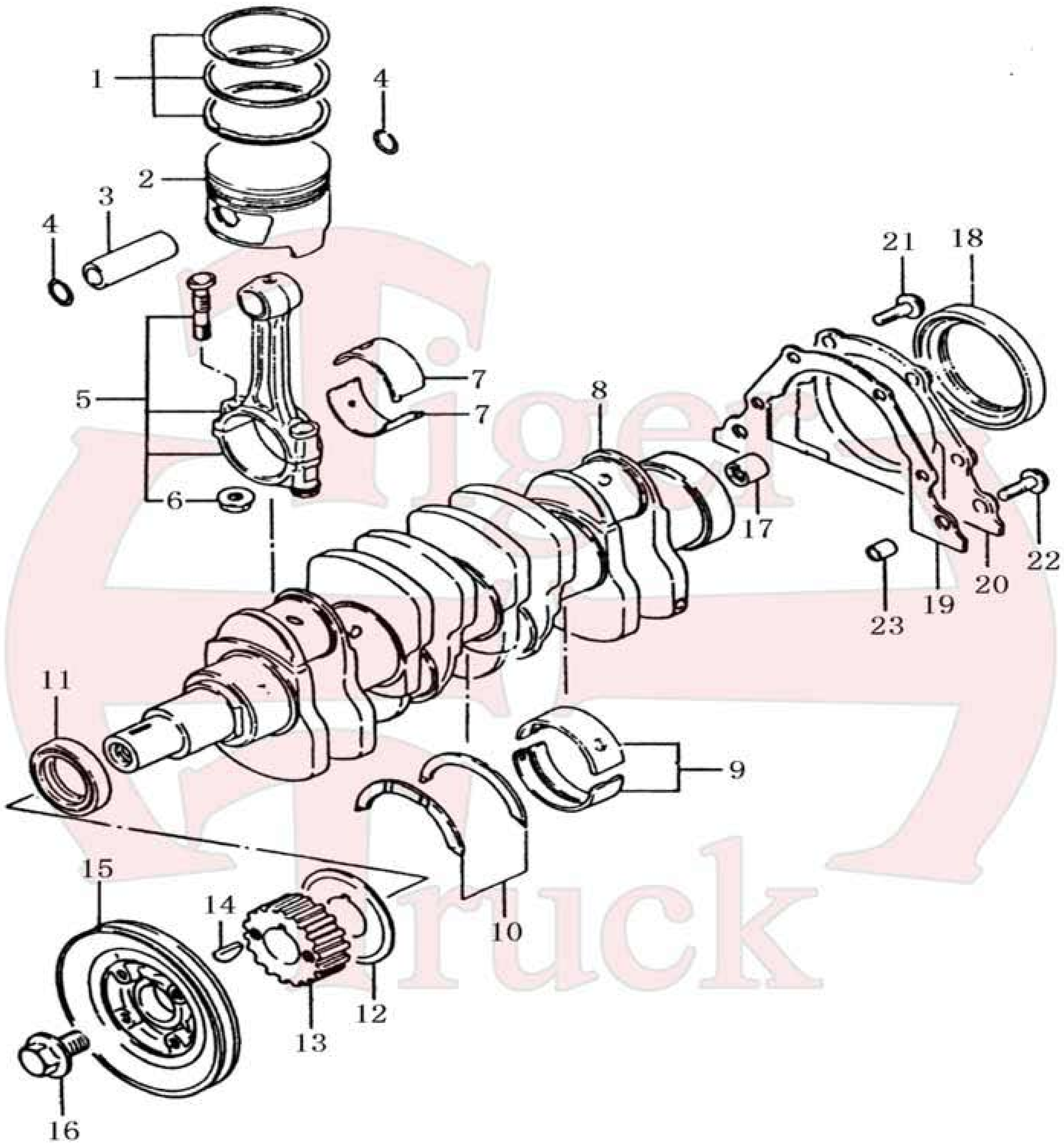

FIGURE 7 CRANKSHAFT & PISTONS

NO	DESCRIPTION	PART NO.	ALL	SINGLE CAB	CREW CAB	NOTE
1	PISTON RING SET (STD)	10002040A10(G)	4			
2	PISTON (STD)	1004028A10	4			
3	PISTON PIN	1004021	4			
4	PISTON PIN LOCK	1004022D	4			
5	CONNECTING ROD	1004011D	4			
6	CONNECTING ROD NUT	1004012D	8			
7	CONNECTING ROD BEARING (STD)	1004014D	8			
8	CRANKSHAFT	1005022A10	1			
9	MAIN BEARINGS (STD)	1002021D	10			
10	CRANKSHAFT THRUST WASHER	1000047D	2			
11	FRONT OIL SEAL	1011016D	1			
12	TIMING BELT GUIDE	1000024	1			
13	TIMING BELT PULLEY	1000048	1			
14	KEY (5X19)	GB/T10099-1979-5X19	1			
15	PULLEY	1000049D	1			
16	BOLT/ WASHER (M12X1.25X25)	1000105D	1			
17	PILOT BEARING	GB/T276-94	1			
18	REAR MAIN SEAL	1002022D	1			
19	HOUSING GASKET	1002030D	1			
20	REAR MAIN SEAL HOUSING	1002020D	1			
21	BOLT/ WASHER	GB/T5783-2000 GB/T97.1-1985-6	4/4			
22	BOLT/ WASHER	GB/T5783-2000 GB/T97.1-1985-6	2/2			
23	KNOCK PIN	1000014D2	2			

FIGURE 8 VALVE TRAIN

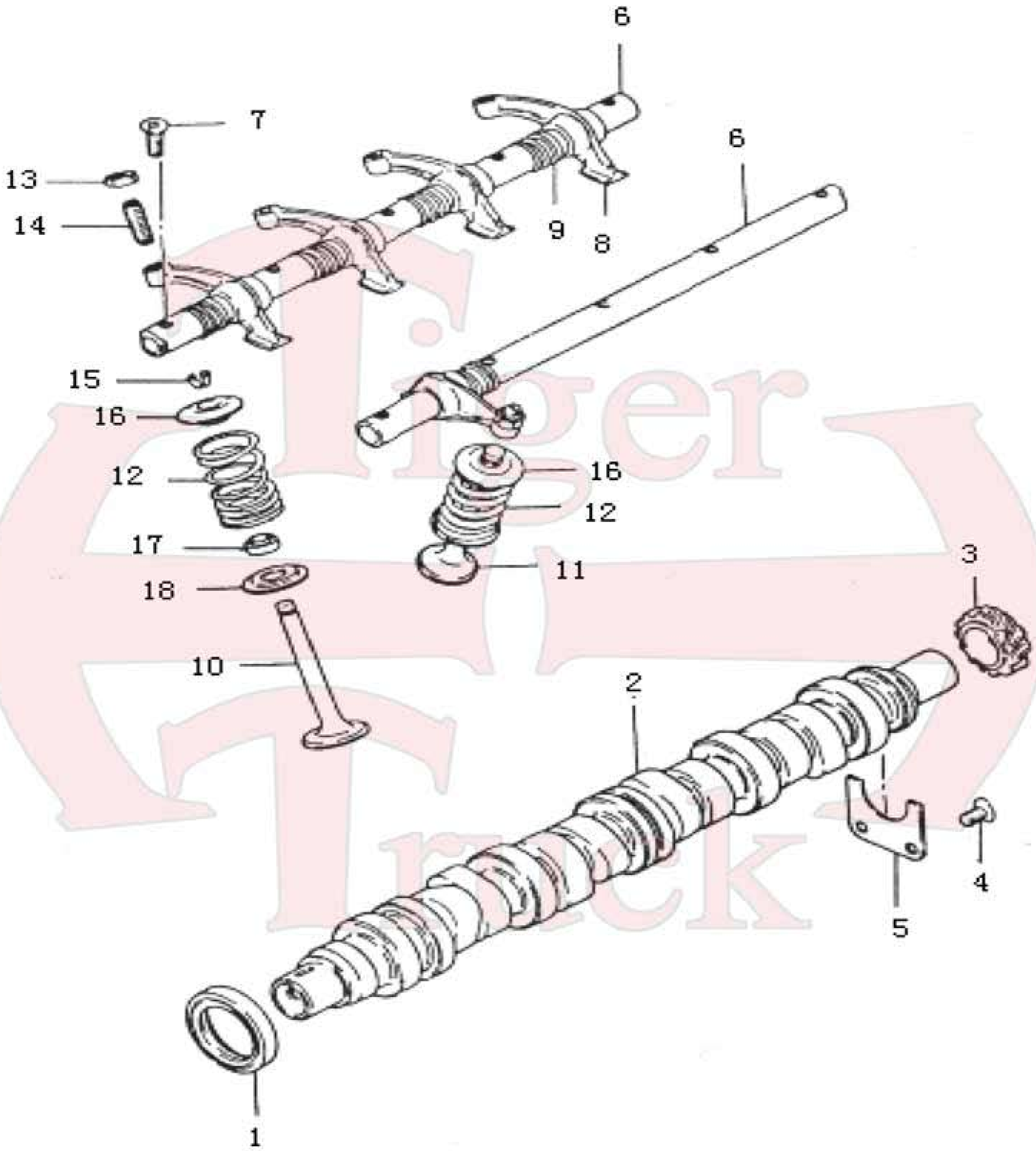

FIGURE 8 VALVE TRAIN

NO	DESCRIPTION	PART NO.	ALL	SINGLE CAB	CREW CAB	NOTE
1	CAMSHAFT OIL SEAL	1000124D	1			
2	CAMSHAFT	1006013A1	1			
3	DISTRIBUTOR DRIVE GEAR	1006012D	1			
4	SCREW	GB/T819-2000-M6X12	2			
5	CAMSHAFT THRUST PLATE	1000129D	1			
6	VALVE ROCKER SHAFT	1007040D	2			
7	SCREW	GB/T819-2000-M6X14	10			
8	VALVE ROCKER ARM	1007020D	8			
9	ROCKER ARM SPRING	1007035D	8			
10	INTAKE VALVE	1007033D1	4			
11	EXHAUST VALVE	1007032D1	4			
12	VALVE SPRING	1007030D	8			
13	NUT	1007046D1	8			
14	VALVE ADJUSTING SCREW	1007027D	8			
15	VALVE KEEPER	1007028D	16			
16	VALVE SPRING RETAINER	1007029D	8			
17	VALVE STEM OIL SEAL	09289-07005	8			
18	VALVE SPRING SEAT	1007021D	8			

FIGURE 9 TIMING COMPONENTS

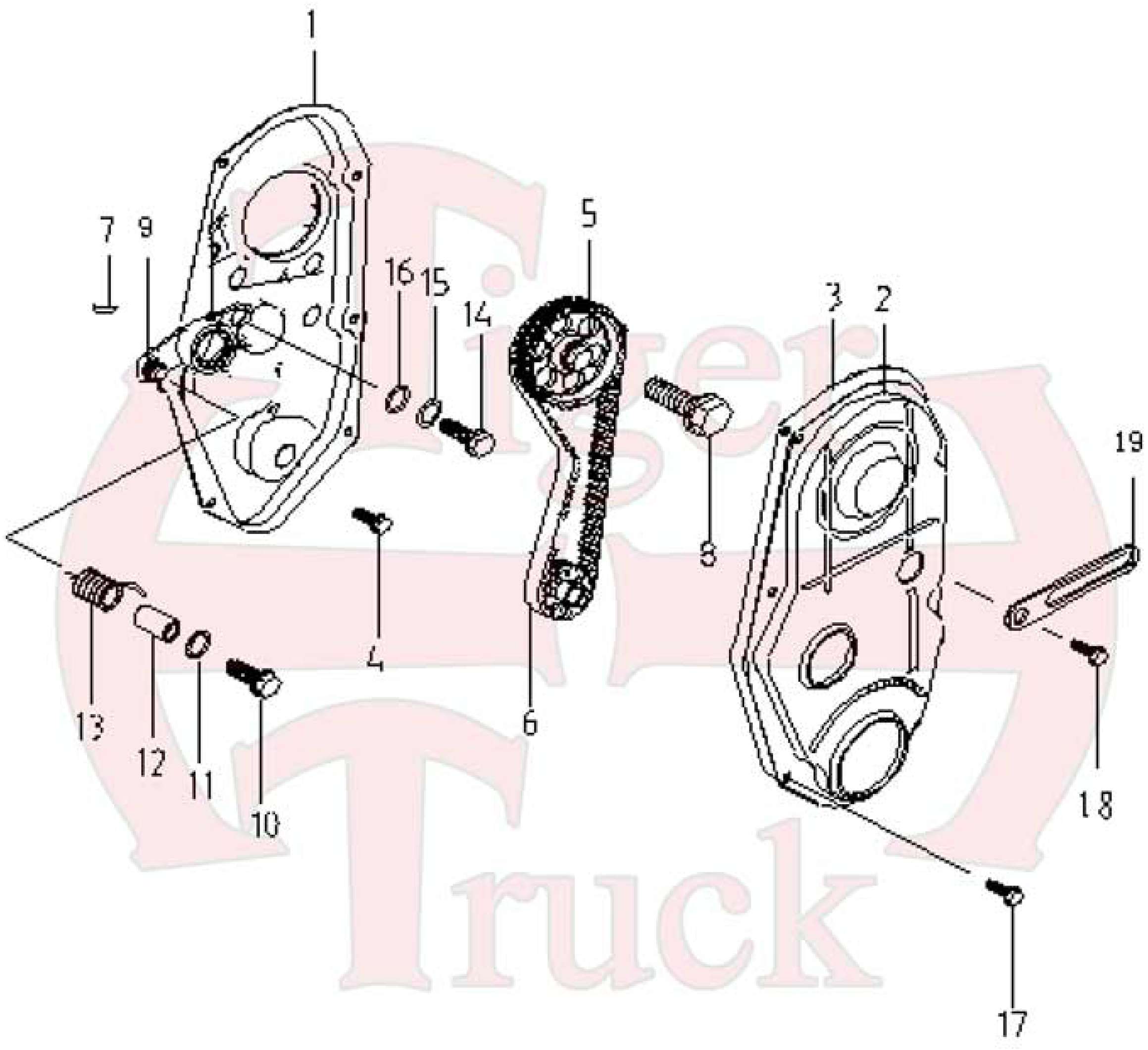

FIGURE 9 TIMING COMPONENTS

NO	DESCRIPTION	PART NO.	ALL	SINGLE CAB	CREW CAB	NOTE
1	INSIDE COVER	1022010D	1			
2	OUTSIDE COVER	1023010D	1			
3	COVER GASKET	1000029D	1			
4	BOLT/ WASHER	GB/T5783-2000-M6X20 GB/T96-1985	4/4			
5	TIMING BELT PULLEY	1000101	1			
6	TIMING BELT	1000053	1			
7	KEY	GB/T1099-1979	1			
8	BOLT	GB/T576-2000	1			
9	TIMING BELT TENSIONER	1021010D	1			
10	BOLT	GB/T5783-2000-M8X40	1			
11	WASHER	1000066D	1			
12	SPACER	1000067D	1			
13	TENSIONER SPRING	1000065D	1			
14	BOLT	GB/T5783-2000-M8X25	1			
15	WASHER	GB/T93-1987-8	1			
16	WASHER	1000019D	1			
17	BOLT/ WASHER	GB/T5783-2000-M6X10 GB/T97.1-1985-6	5/5			
18	BOLT/ WASHER	GB/T5783-2000-M6X14 GB/T97.1-1985-6	1/1			

FIGURE 10 INTAKE MANIFOLD

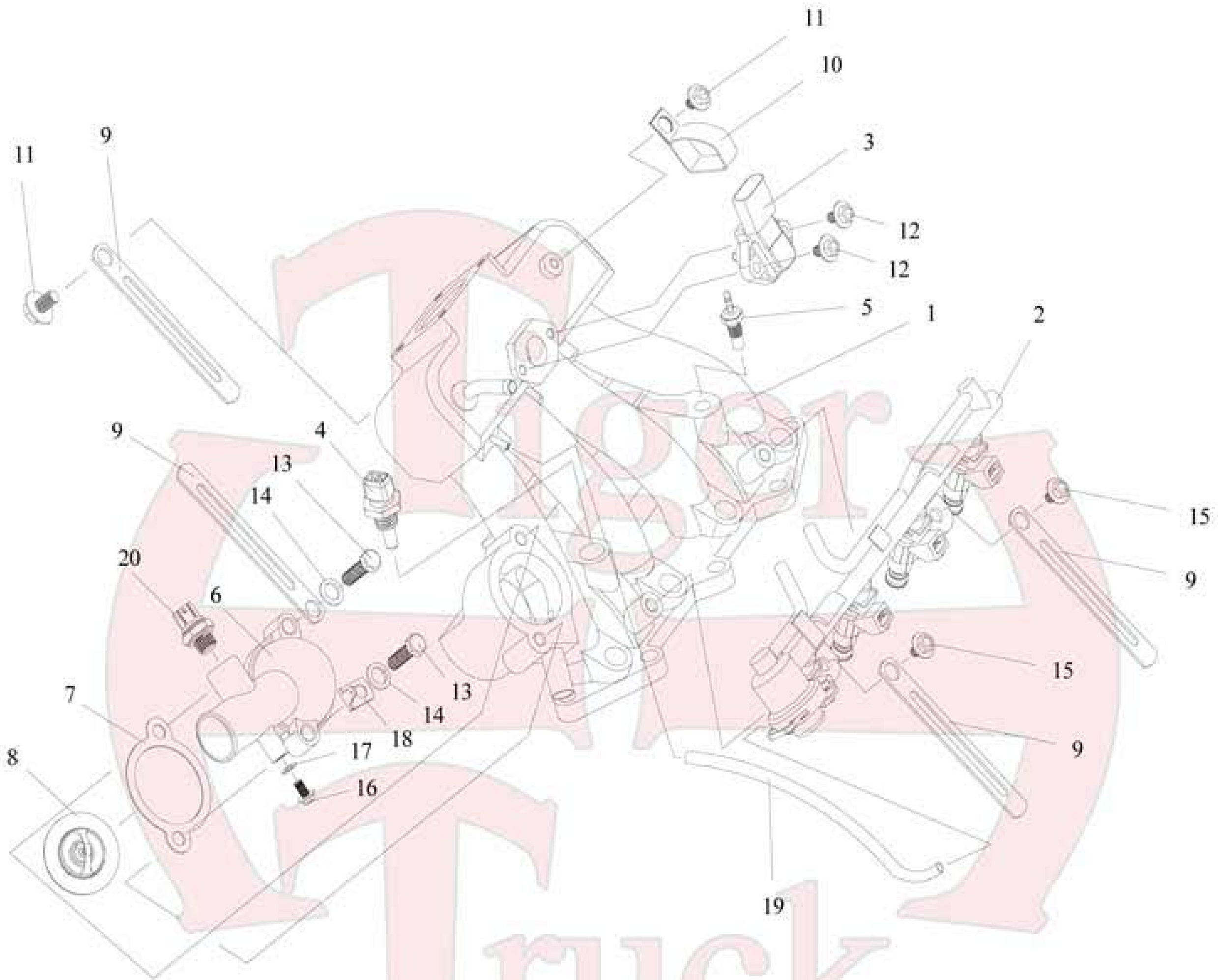

FIGURE 10 INTAKE MANIFOLD

NO	DESCRIPTION	PART NO.	ALL	SINGLE CAB	CREW CAB	NOTE
1	INTAKE MANIFOLD	1008040A9	1			
2	FUEL RAIN ASM	1104100A8	1			
3	INTAKE AIR PRESSURE TEMP SENSOR	3762010B3	1			
4	ENGINE TEMP SENSOR (FAN)	3762020B3	1			
5	ENGINE TEMP SENSOR (WATER)	3808010-01	1			
6	THERMOSTAT HOUSING	1008029A4	1			
7	THERMOSTAT GASKET	1008031D	1			
8	THERMOSTAT	1306010D1	1			
9	LONG CLAMP	1000012D	4			
10	CLAMP	1000072D	1			
11	BOLT	Q1860616-M6X10	2			
12	BOLT	Q1860616	2			
13	BOLT	GB/T5783-2000-M8X30	2			
14	WASHER	GB/T848-1985-8	2			
15	BOLT	Q1840812-N8X12	2			
16	COOLANT SYSTEM SCREW	1008041-01	1			
17	COOLANT SYSTEM SCREW WASHER	1008042-01	1			
18	CLAMP	1000079D	1			
19	HOSE	1104102A8	1			
20	COOLANT FAN SWITCH	1305010A4	1			

FIGURE 11 ENGINE IGNITION & RELAY

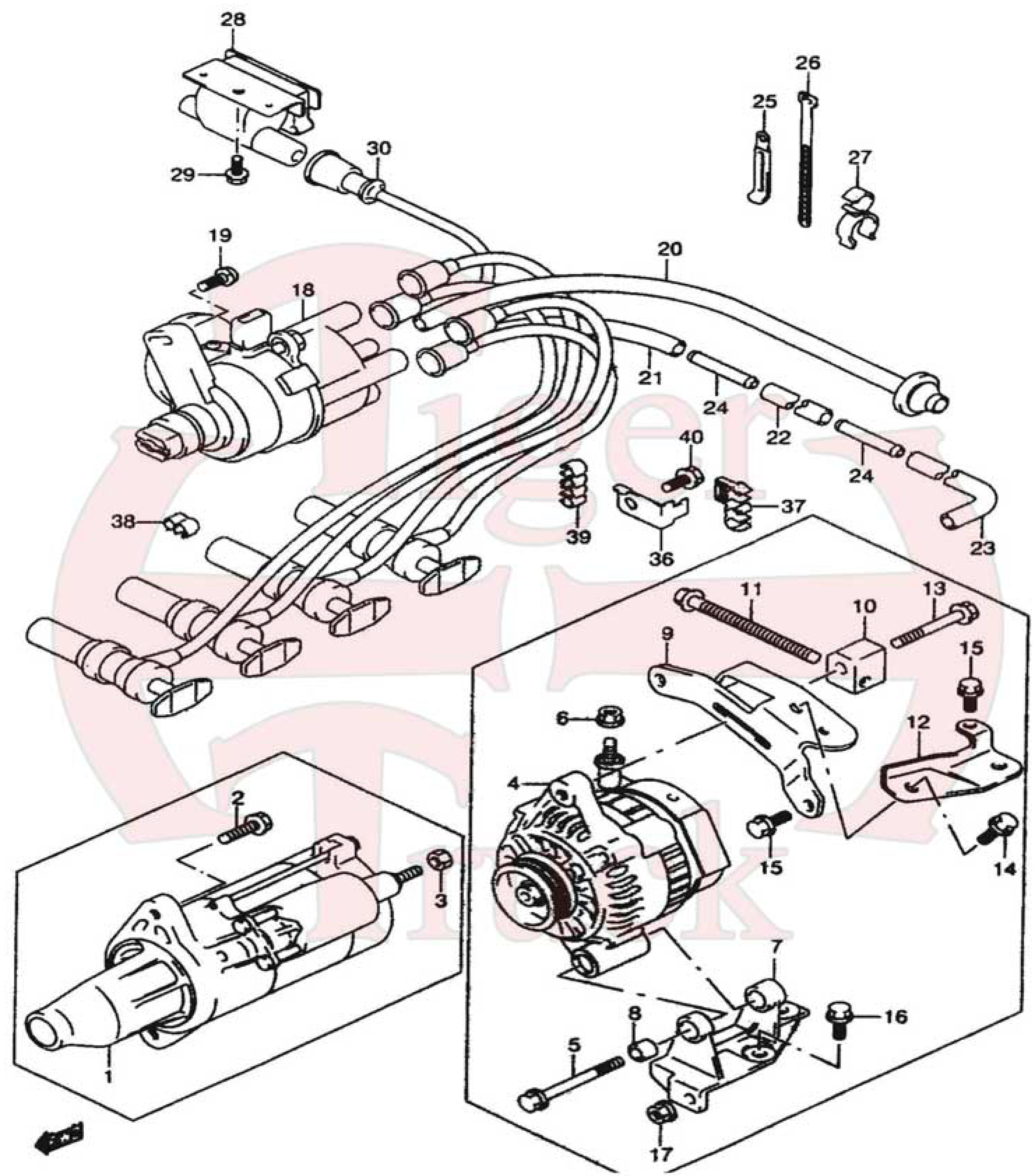

FIGURE 11 IGNITION & RELAY

NO	DESCRIPTION	PART NO.	ALL	SINGLE CAB	CREW CAB	NOTE
1	STARTER	CK3700430N1	1			31100-77A00
2	BOLT	CK1000100N1-118	2			0150-08303
3	NUT	CK1000100N1-119	1			08316-10083
4	ALTERNATOR	CK3700570N1	1			31400-77A00
5	BOLT	CK1000100N1-120	1			01550-10853
6	NUT	CK1000100N1-121	1			08316-10063
7	ALTERNATOR BRACKET	CK1000100N1-122	1			11551-77A00
8	ALTERNATOR GASKET	CK1000100N1-123	1			11555-60G00
9	ALTERNATOR ADJUSTING ARM	CK1000100N1-124	1			11561-77A00
10	ALTERNATOR BELT ADJUSTER	CK1000100N1-125	1			11562-77A00
11	BOLT	CK1000100N1-126	1			11563-77A00
12	ENGINE SUPPORT BRACKET	CK1000100N1-127	1			11581-77A00
13	BOLT	CK1000100N1-128	1			09118-08106
14	BOLT	CK1000100N1-129	1			01550-08123
15	BOLT	CK1000100N1-130	2			01550-08203
16	BOLT	CK1000100N1-131	2			01550-08253
17	NUT	CK1000100N1-132	1			08136-10083
18	DISTRIBUTOR ASM	3706010A8	1			33100-77A00
19	SCREW	CK1000100N1-133	1			09138-08003
20	DISTRIBUTOR HOSE	DK1000100N1-134	1			33460-77A10

FIGURE 11 IGNITION & RELAY

NO	DESCRIPTION	PART NO.	ALL	SINGLE CAB	CREW CAB	NOTE
21	HOSE	CK1000100B1-135	1			33460-77A20
22	HOSE	CK1000100B1-136	1			33460-77A20
23	HOSE	CK1000100B1-137	1			323460-77A40
24	HOSE JOINT	CK1000100N1-138	2			09367-08007
25	HOOP	CK1000100B1-139	1			09404-122011
26	WIRE TIE	CK1000100B1-140	1			09407-30401
27	CLIP	CK1000100B1-141	1			09408-00157
28	IGNITION COIL	CK3700560N1	1			3705010B3
29	SCREW	CK1000100N1-142	1			02162-06123
30	PLUG WIRE SET	3707020A8(Z)	1			
31	RELAY	CK100N1-149	1			33705-77A00
37	CLIP	CK1000100N1-150	1			33884-77A00
38	WIRE CLAMP	CK1000100B1-151	1			09408-00033
39	WIRE CLAMP	CK1000100B1-152	1			09408-00035
40	BOLT	CK1000100N1-153	1			01550-08123

FIGURE 12 STARTER

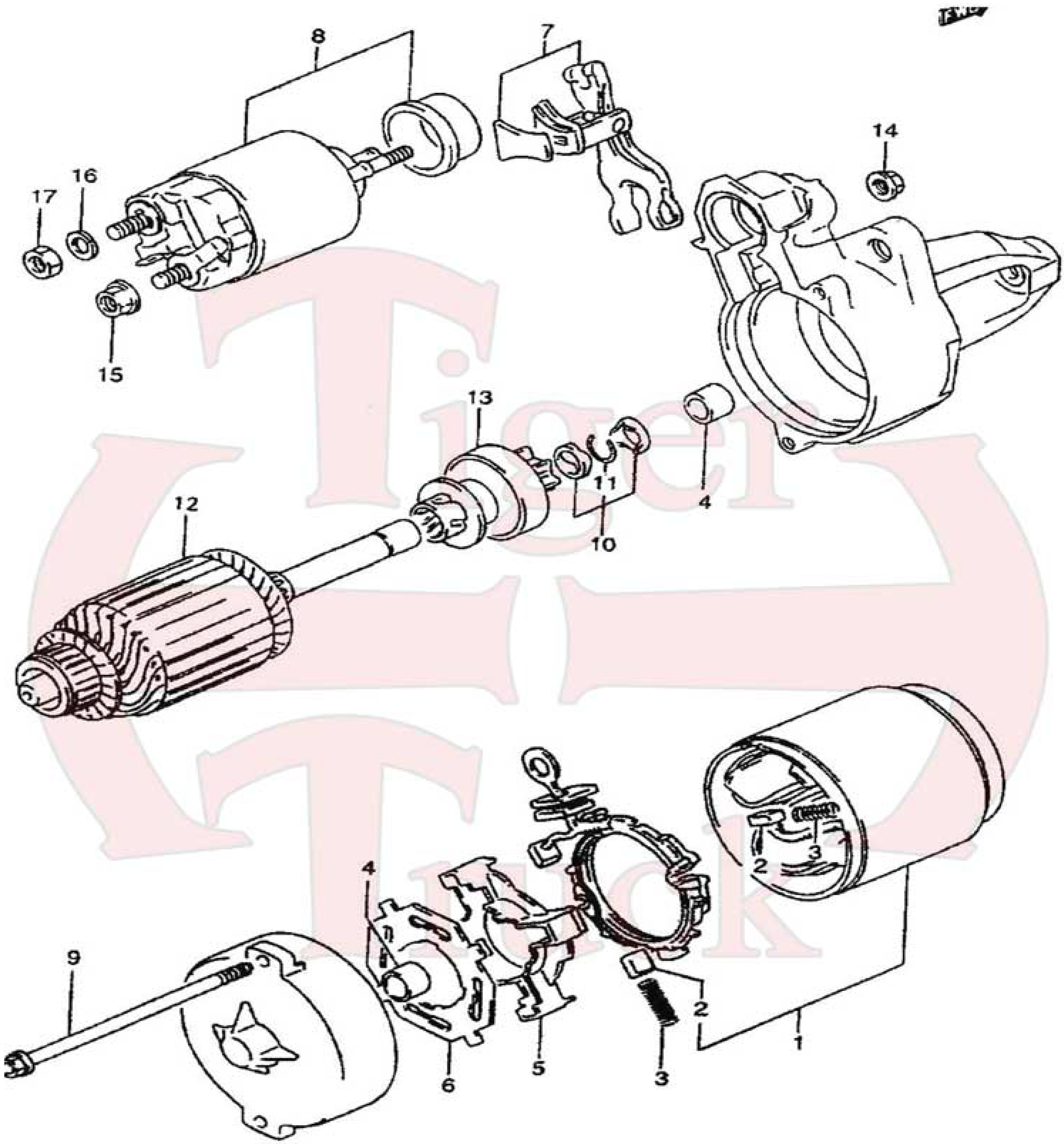

FIGURE 12 STARTER

NO	DESCRIPTION	PART NO.	ALL	SINGLE CAB	CREW CAB	NOTE
	STARTER	CK3700430N1	1			31100-77A00
1	FORK ASM	CK3700430N1-001	1			31100-77A00
2	BRUSH	CK3700430N1-002	4			31131-51A10
3	BRUSH SPRING	CK3700430B1-003	4			31135-51A10
4	GASKET	CK3700430B1-004	2			31152-52A50
5	BRUSH BRACKET	CK3700430B1-005	1			31173-51A10
6	INSULATING WASHER	CK3700430N1-006	1			31173-51A10
7	GEAR RELAY ROD	CK3700430B1-007	1			31191-85020
8	SOLENOID SWITCH	CK3700430N1-008	1			31220-51A10
9	BOLT	CK3700430N1-009	2			31281-51A10
10	NUT	CK3700430N1-010	1			31310-51A10
11	CLIP	CK3700430N1-011	1			31312-51A10
12	ARMATURE	CK3700430N1-012	1			31311-51A10
13	UNI-DIRECTIONAL CLUTCH	CK3700430N1-013	1			31320-77A00
14	NUT	CK3700430N1-014	2			08316-10063
15	NUT	CK3700430N1-015	1			08316-10083
16	WASHER	CK3700430N1-016	1			08312-01087
17	NUT	CK3700430N1-017	1			08310-00083

FIGURE 13 ALTERNATOR

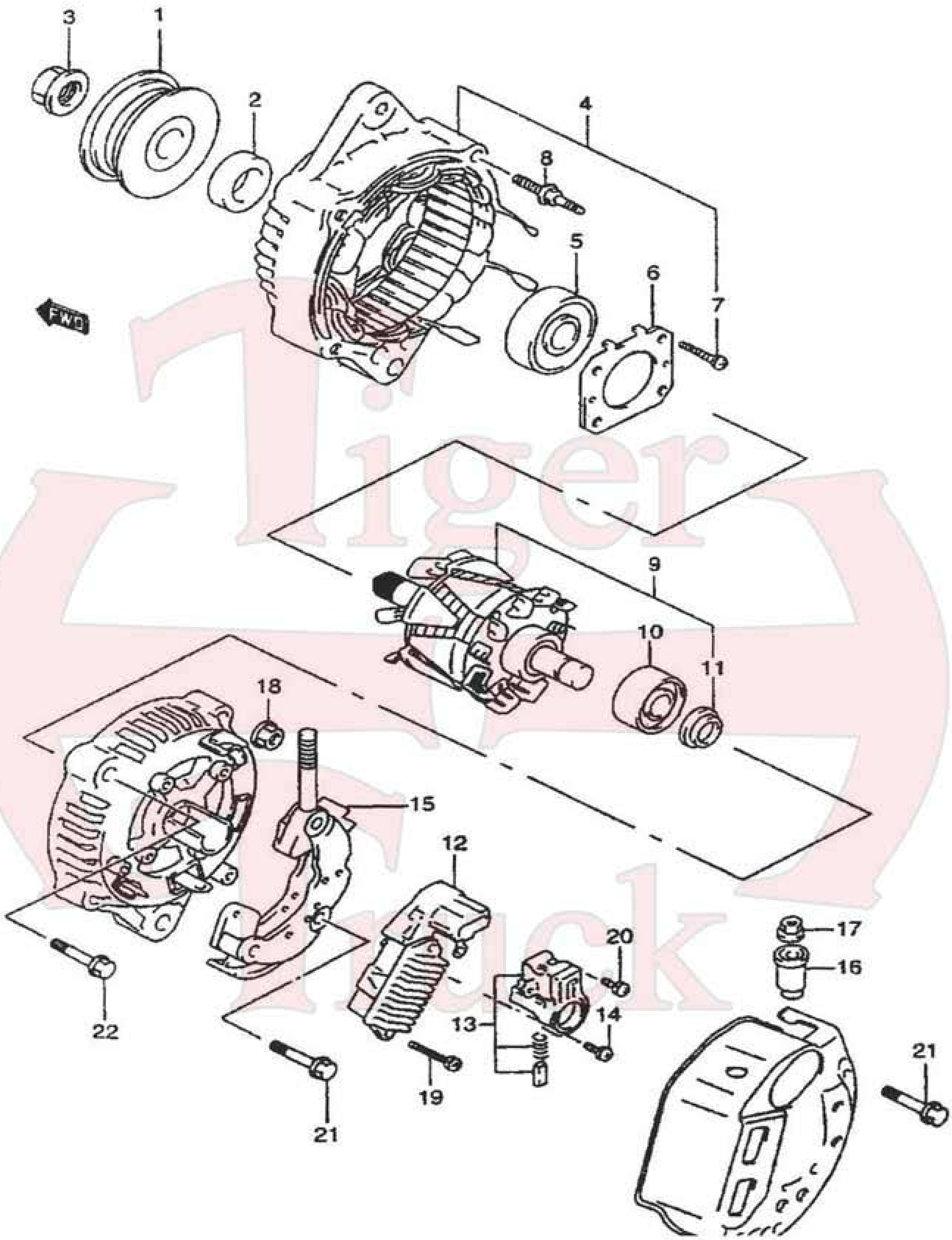

FIGURE 13 ALTERNATOR

NO	DESCRIPTION	PART NO.	ALL	SINGLE CAB	CREW CAB	NOTE
	ALTERNATOR	CK3700570N1	1			31400-77A00
1	PULLEY (SERPENTINE)	CK3700570N1-001	1			31171-77A00
2	PULLEY BEARING	CK3700570N1-002	1			31792-85250
3	NUT	CK3700570N1-003	1			31775-86510
4	DRIVE SIDE COVER ASM	CK3700570N1-004	1			31580-77A00
5	FRONT BEARING	CK3700570N1-005	1			31582-60F11
6	BEARING RETAINER RING	CK3700570B1-006	1			31585-85251
7	SCREW	CK3700570B1-007	4			31586-85250
8	STUD BOLT	CK3700570N1-008	2			31587-85250
9	ROTOR	CK3700570N1-009	1			31710-60F11
10	REAR BEARING	CK3700570N1-010	1			31612-86510
11	BEARING CAP	CK3700570N1-011	1			31613-82610
12	VOLTAGE REGULATOR	CK3700570N1-012	1			32500-77A00
13	BRUSH BRACKET	CK3700570N1-013	1			31656-77A00
14	SCREW	CK3700570N1-014	6			02112-04063
15	RECTIFIER	CK3700570N1-015	1			31621-71C50
16	TERMINAL POST (INSULATED)	CK3700570N1-016	1			31514-86510
17	NUT	CK3700570N1-017	1			08361-15063
18	NUT	CK3700570B1-018	2			08316-10053
19	SCREW	CK3700570N1-019	2			02112-34253

FIGURE 13 ALTERNATOR

NO	DESCRIPTION	PART NO.	ALL	SINGLE CAB	CREW CAB	NOTE
20	SCREW	CK3700570N1-020	1			02112-04083
21	BOLT	CK3700570N1-021	3			31691-85250
22	BOLT	CK3700570N1-022	2			31651-85251

Tiger Truck

FIGURE 14 DISTRIBUTOR

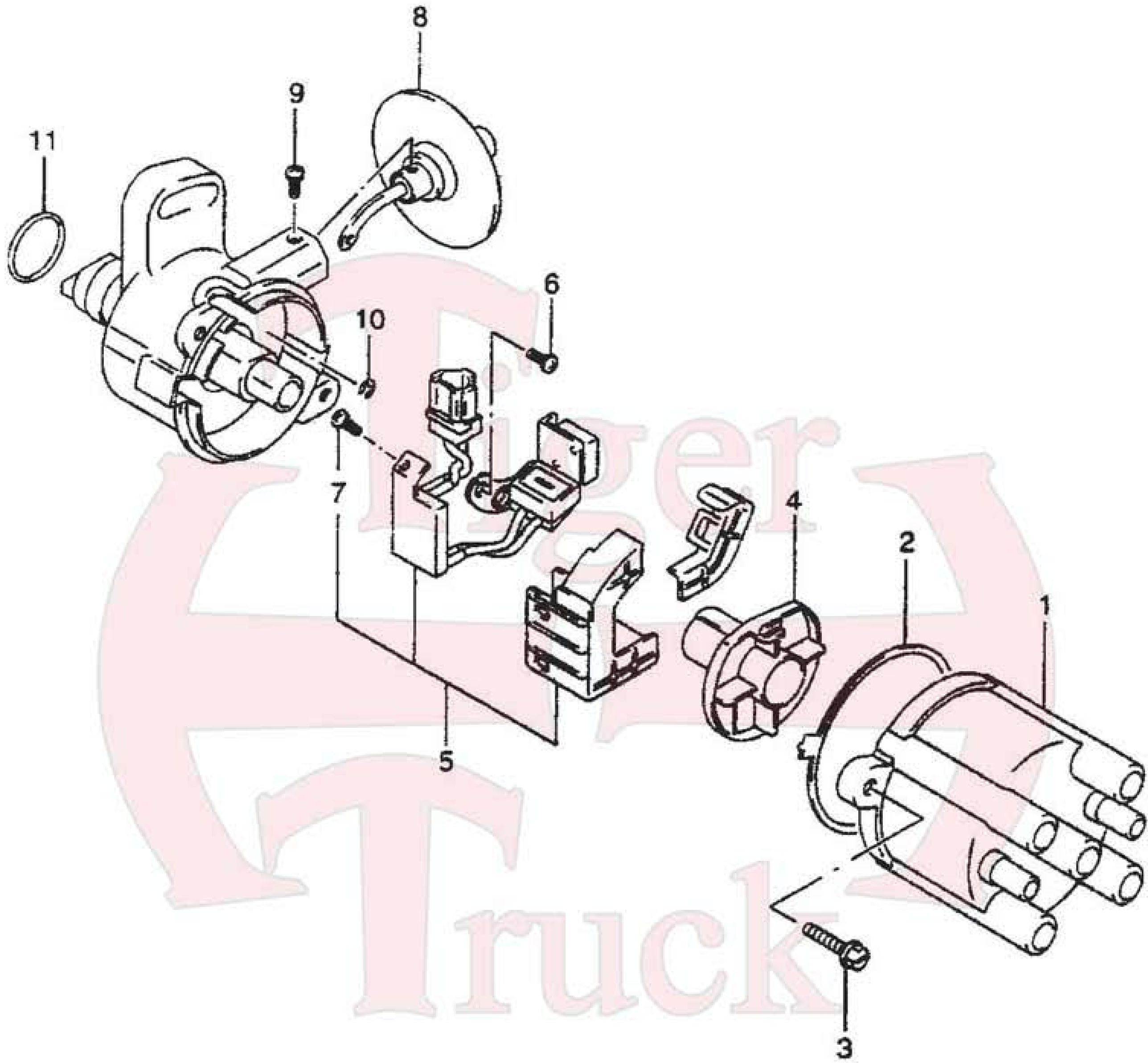

FIGURE 14 DISTRIBUTOR

NO	DESCRIPTION	PART NO.	ALL	SINGLE CAB	CREW CAB	NOTE
	DISTRIBUTOR ASM	3706010A8	1			
1	DISTRIBUTOR CAP	10103706160A8	1			
2	RUBBER PAD	CK3700500N1-002	1			33324-55F11
3	BOLT					
4	DISTRIBUTOR ROTOR	10103706020A8	1			
5	IGNITION ASM	CK3700500N1-005	N/A			33370-77A00
6	SCREW	CK3700500N1-006	2			33151-80020
7	SCREW	CK3700500N1-007	2			33151-77A00
8	VACUUM REGULATOR	N/A				
9	SCREW	CK3700500N1-009	1			33238-77A00
10	E-RING	CK3700500N1-010	1			33239-76410
11	O'RING	CK3700500N1-011	1			33278-54E10

FIGURE 15 CLUTCH

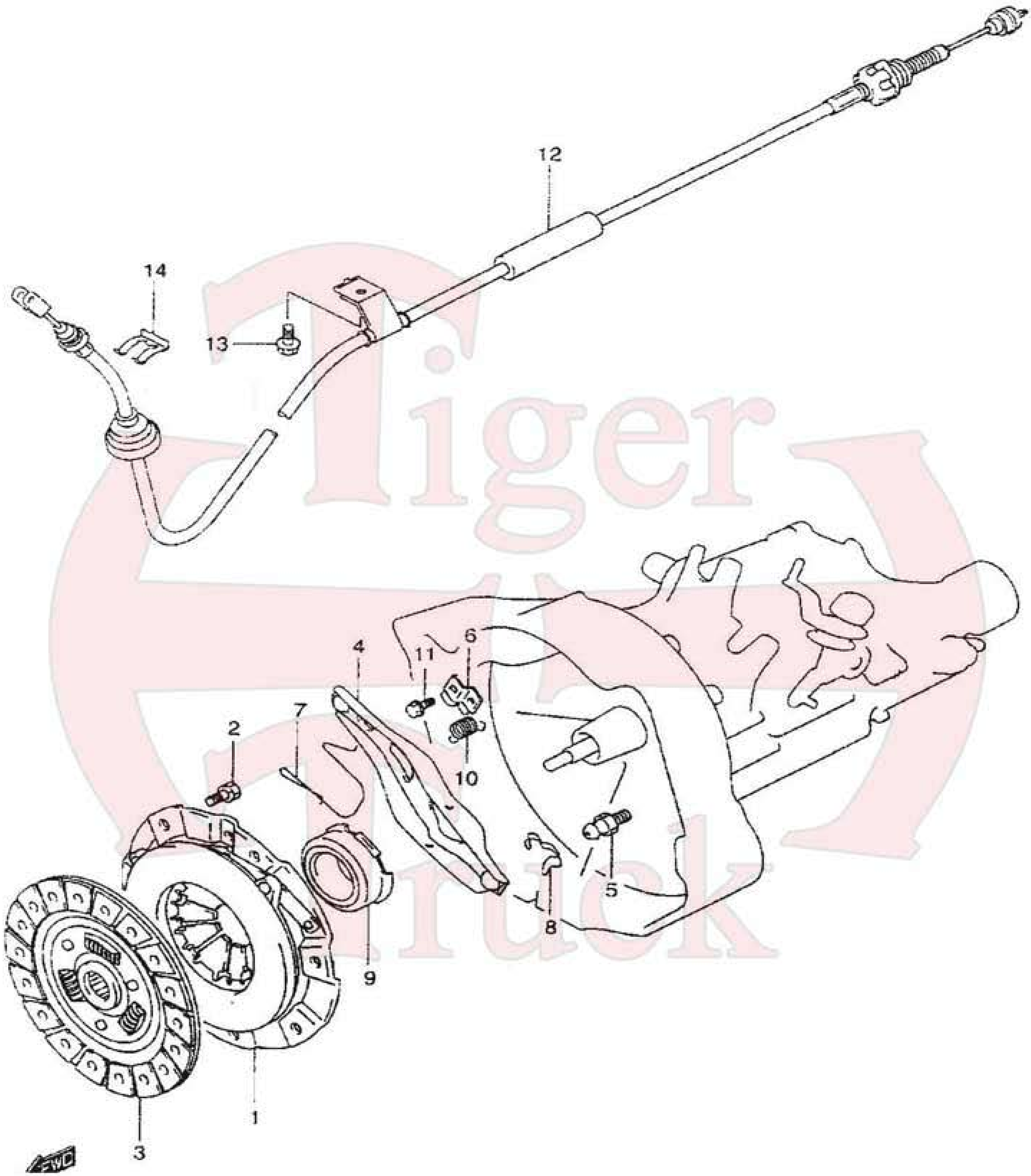

FIGURE 15 CLUTCH

NO	DESCRIPTION	PART NO.	ALL	SINGLE CAB	CREW CAB	NOTE
1	PRESSURE PLATE	1601010A6	1			
2	BOLT	CK1000100N1-155	6			09117-08096
3	CLUTCH DISC	1601020A6	1			
4	CLUTCH RELEASE FORK	CK1000100N1-157	1			QS1706211-472A
5	CLUTCH RELEASE SUPPORT	CK1000100N1-158	1			QS1706221-472A
6	RETURN SPRING BRACKET	CK1000100N1-159	1			QS1706226-472A
7	CLIP	CK1000100N1-160	1			QS1706231-472A
8	CLIP	CK1000100B1-161	1			QS1706241-472A
9	THROW OUT BEARING	CK1600110N1	1			
10	RETURN SPRING (DISENGGAGING)	CK1600013N1	1			
11	BOLT	CK1000100N1-162	1			01550-06123
12	CLUTCH CABLE	CK1602100N1	1			
13	BOLT	GB/T5781-2000	1			
14	CLIP	CK1602011N1	1			

FIGURE 16 INTAKE MANIFOLD

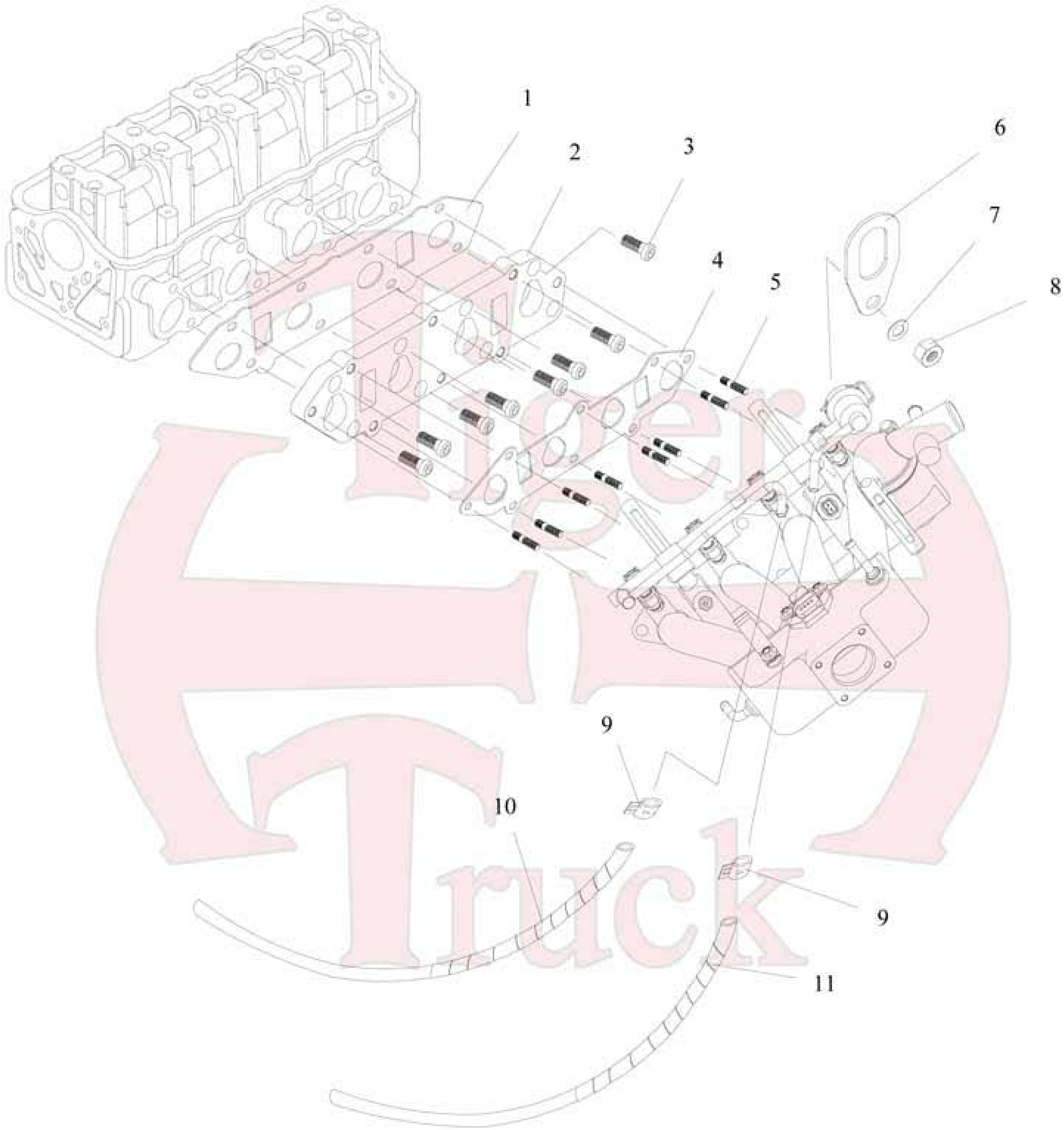

FIGURE 16 INTAKE MANIFOLD

NO	DESCRIPTION	PART NO.	ALL	SINGLE CAB	CREW CAB	NOTE
1	GASKET	1000183A8	1			
2	PLATE	1000182A8	1			
3	BOLT	Q2180820	8			
4	GASKET	1000187A8	1			
5	STUD BOLT	1000094D	8			
6	HOOK	1000027D	1			
7	WASHER	GB/T848-1985-8	8			
8	NUT	GB6170-2000-M8	8			
9	CLAMP	1000070A8	2			
10	HOSE	100034A8	1			
11	HOSE	1000075A8	1			
	HIGH PRESSURE FUEL HOSE PROTECTOR	1000204A8				

Tiger Truck

FIGURE 17 THROTTLE BODY

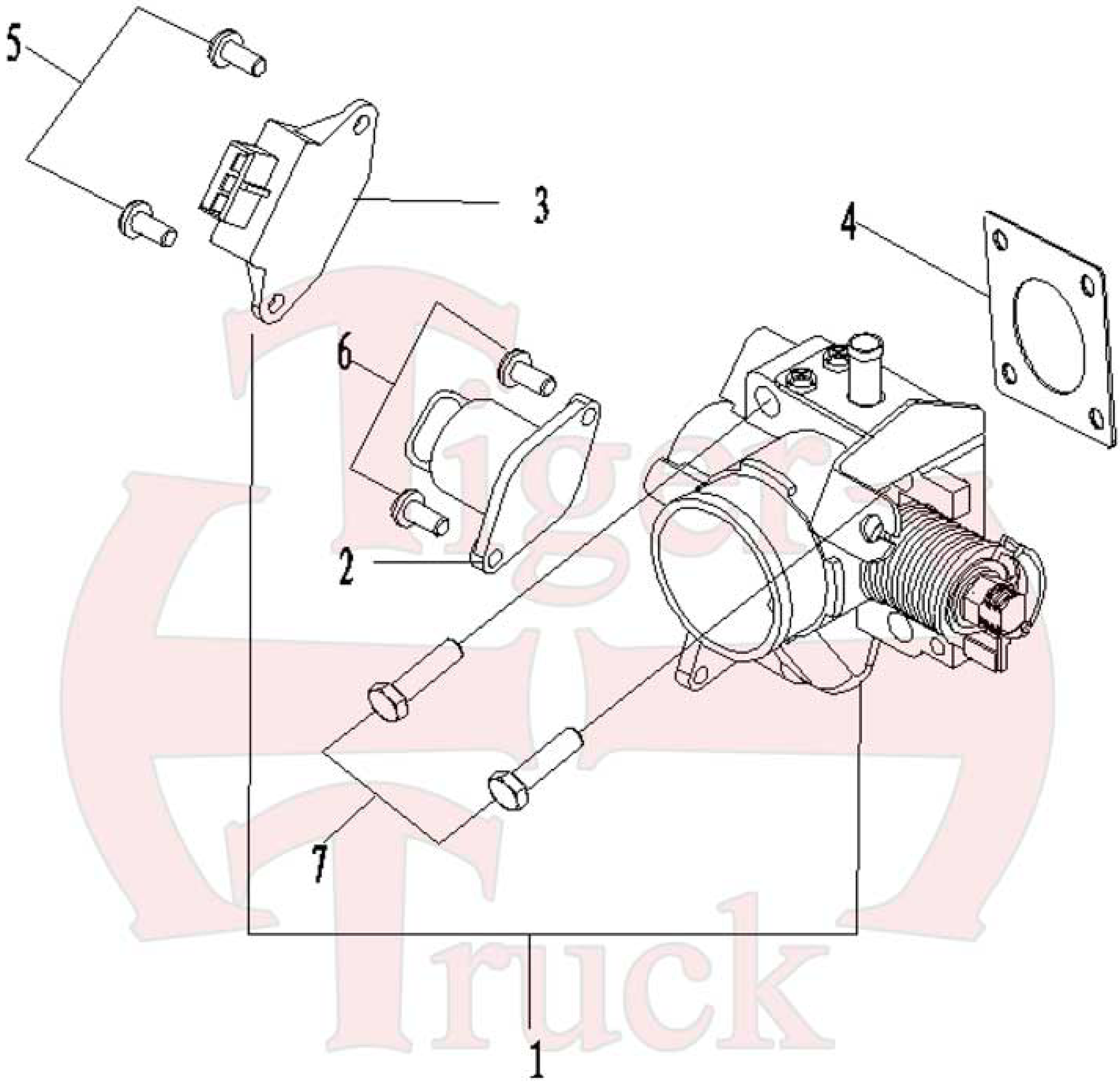

FIGURE 17 THROTTLE BODY

NO	DESCRIPTION	PART NO.	ALL	SINGLE CAB	CREW CAB	NOTE
1	THROTTLE BODY ASM	CK1000100N1-171	1			1107200A8
2	IDLE MOTOR	CK1000100N1-172	1			3728010B3
3	THROTTLE POSITION SENSOR	CK1000100N1-173	1			3762030B3
4	THROTTLE GASKET	CK1000100N1-174	1			1000184A8
5	SCREW	GB/T818-200-M3X14	2			
6	SCREW	GB/T818-2000-M3X14	2			
7	BOLT	GB/T5782-2000-M6X35	4			

Tiger Truck

FIGURE 18 OIL PUMP

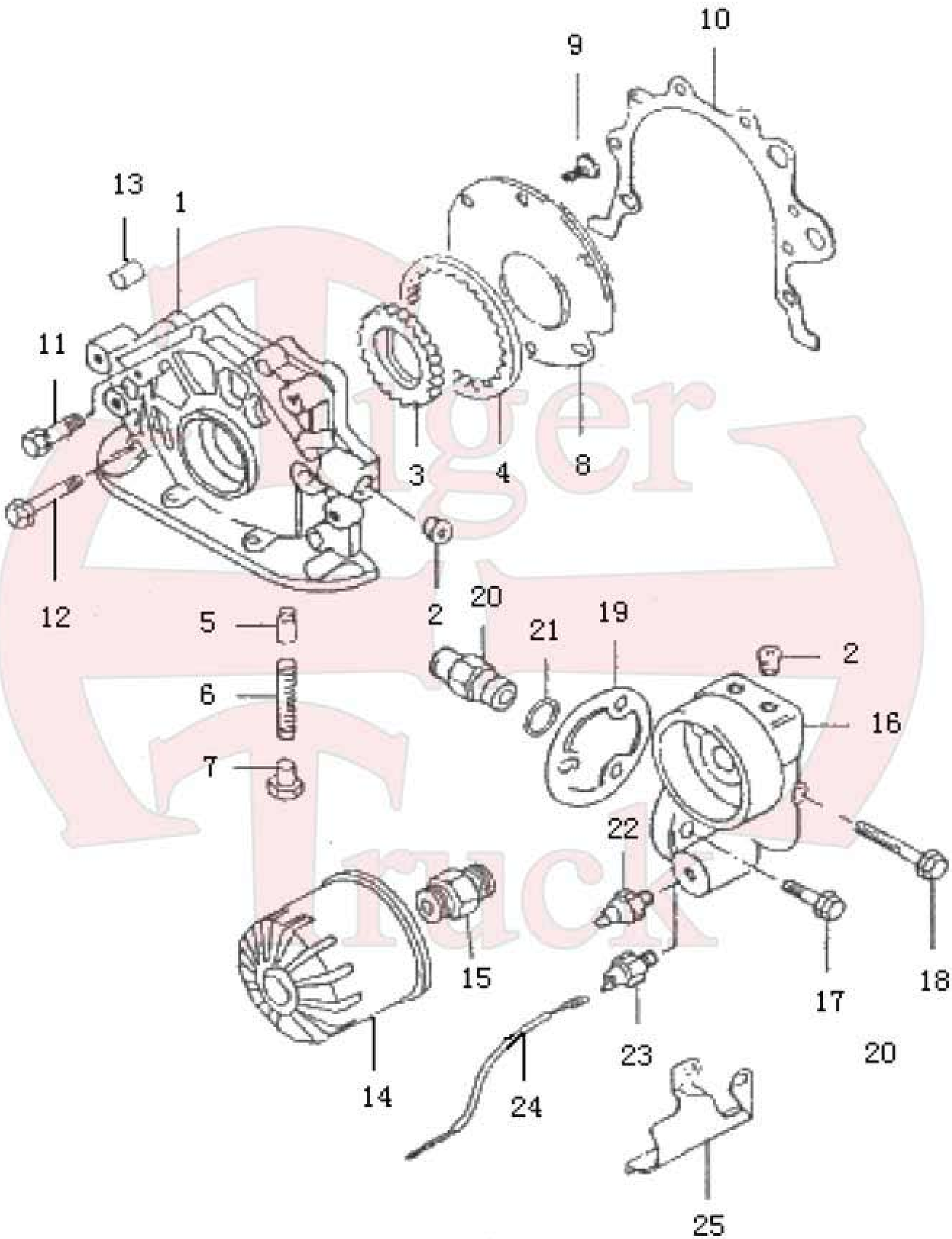

FIGURE 18 OIL PUMP

NO	DESCRIPTION	PART NO.	ALL	SINGLE CAB	CREW CAB	NOTE
1	OIL PUMP ASM	1011010D	1			
2	OIL GALLERY PLUG	1011011D	3			
3	PUMP GEAR	1011020D	1			
4	PUMP OUTER GEAR	1011021D	1			
5	RELIEF VALVE	1011014D	1			
6	RELIEF VALVE SPRING	1011013D	1			
7	RELIEF VALVE PLUG	1011012D	1			
8	GEAR PLATE	1011015D	1			
9	SCREW	GM/T819-2000-M6X12	6			
10	OIL PUMP CASE GASKET	1000051D	1			
11	BOLT/ WASHER	GB/T5782-2000-M6X35 GB/T97.1-1985-6	6/6			
12	BOLT/ WASHER	GB/T5782-2000-M6X40 GB/T97.1-1985-6	2/2			
13	KNOCK PIN	1000014D2	2			
14	OIL FILTER	1012010D2	1			
15	OIL FILTER ADAPTER	1012031D	1			
16	OIL FILTER STAND	1012032D	1			
17	BOLT/ WASHER	GB/T5782-2000-M6X25 GB/T97.1-1985-6	2/2			
18	BOLT/ WASHER	GB/T5782-2000-M6X60 GB/T97.1-1985-6	1/1			
19	OIL FILTER STAND GASKET	1000013D	1			
20	STAND TO PUMP ADAPTER	1002026D	1			
21	O'RING	1002031D	1			
22	OIL SENDING UNIT	3810010D	1			
23	OIL SENDING UNIT	3810010D	1			
24	LEAD WIRE	3724200-01	1			
25	PROTECTOR	1000078D	1			

FIGURE 19 WATER PUMP

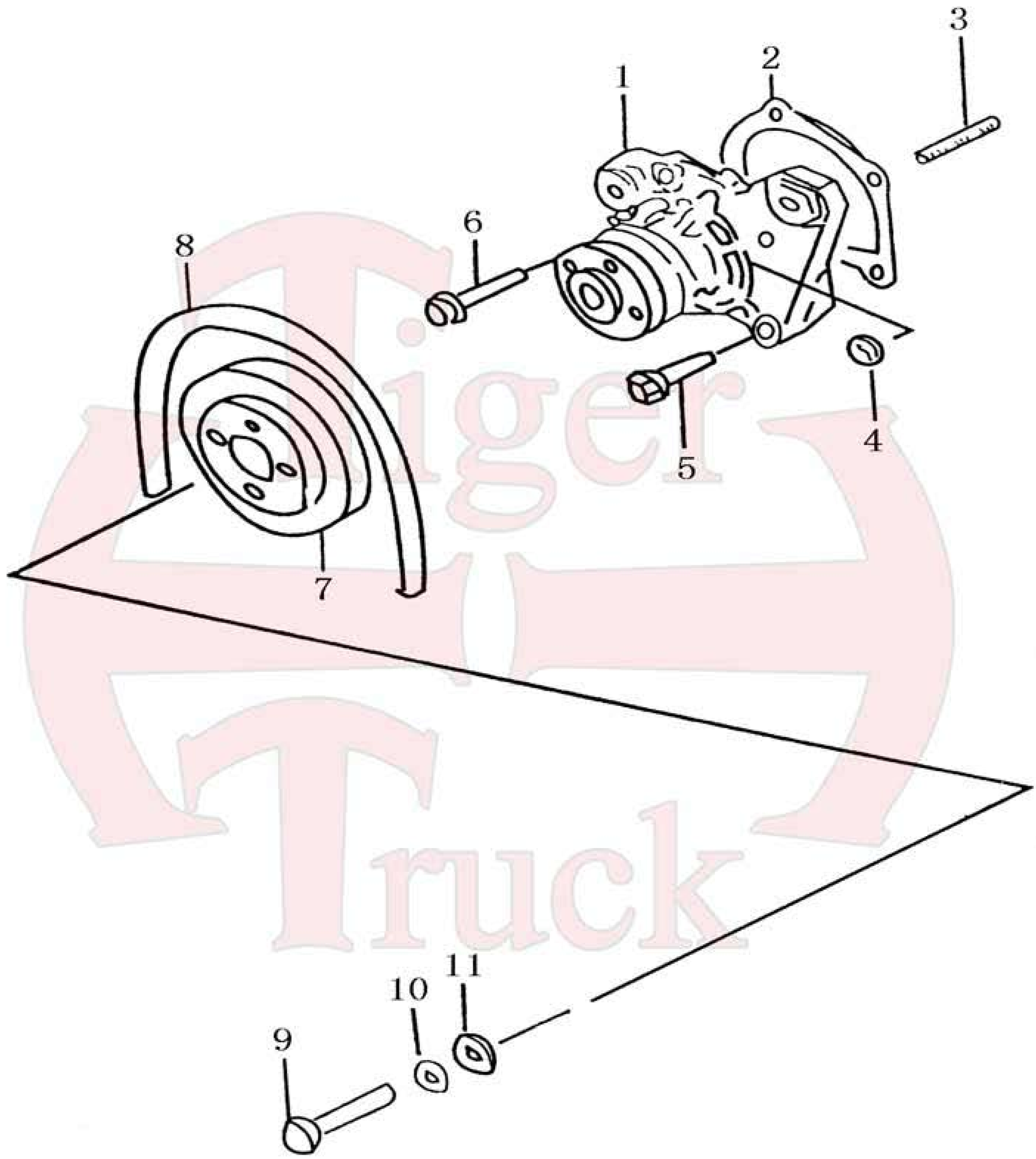

FIGURE 19 WATER PUMP

NO	DESCRIPTION	PART NO.	ALL	SINGLE CAB	CREW CAB	NOTE
1	WATER PUMP ASM	1307010A1	1			
2	WATER PUMP GASKET	1000052D	1			
3	STUD BOLT	100092D	1			
4	NUT/ WASHER	GB/T6170-2000-M6 GB/T97.1-1985-6	2/2			
5	BOLT/ WAHSER	GB/T5783-2000-M6X30 GB/T97.1-1985-6	2/2			
6	BOLT/ WAHSER	GB/T5783-2000-M6X30 GB/T97.1-1985-6	1/1			
7	WATER PUMP PULLEY (V-BELT)	100017D	1			
8	WATER PUMP BELT (V-BELT)	1000077B4	A/R			
	WATER PUMP BELT (SERPENTINE)	1000077A6	A/R			
9	WATER PUMP BOLT	GB/T5783-2000-M6X10	4			
10	WASHER	GB/T97.1-1985-6	4			
11	WASHER	GB/T859-1987-6	4			

Truck

FIGURE 20 TRANSMISSION

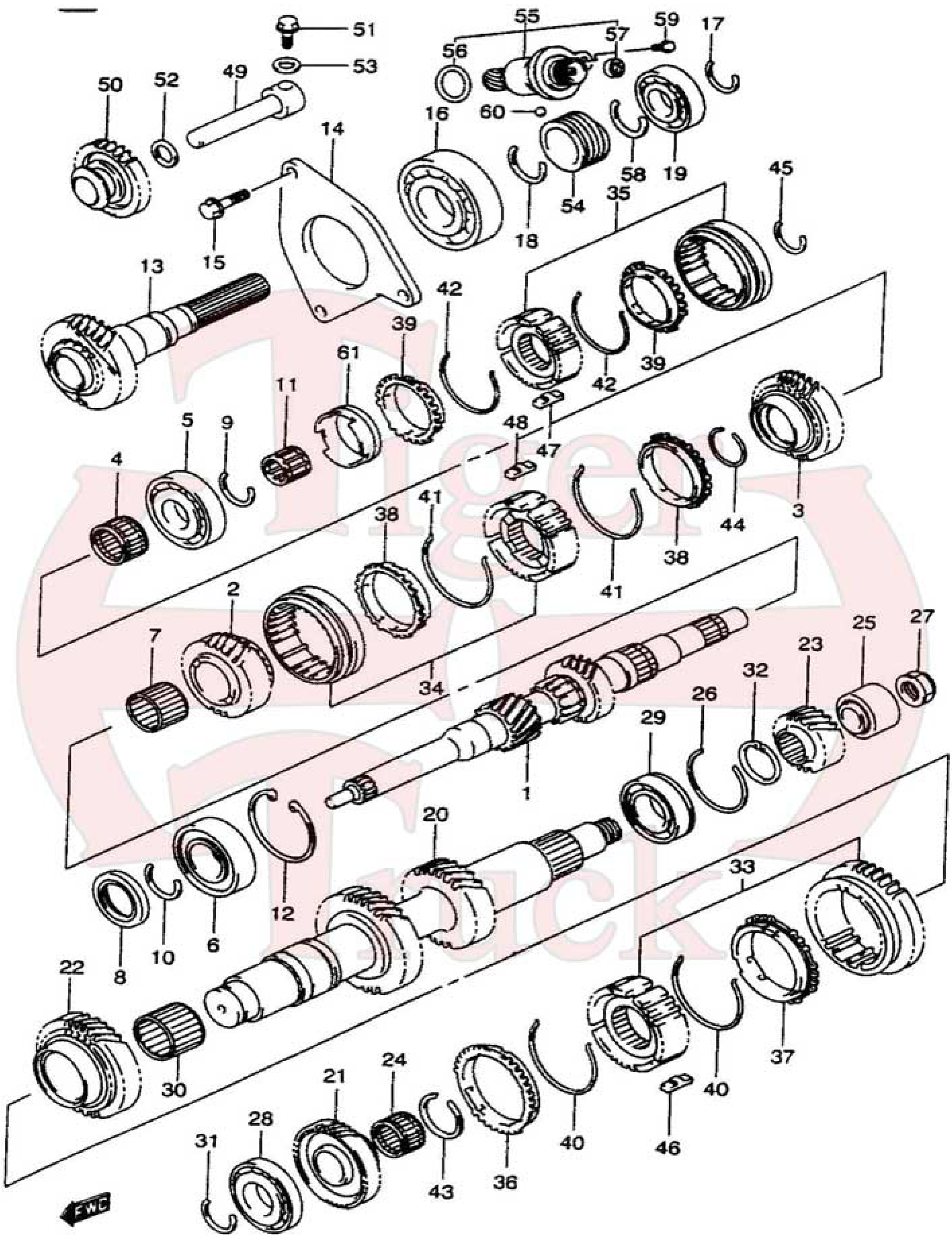

FIGURE 20 MANUAL TRANSMISSION

NO	DESCRIPTION	PART NO.	ALL	SINGLE CAB	CREW CAB	NOTE
1	INPUT SHAFT	CK1700100N1-001	1			
2	INPUT SHAFT 3Rrd gear	CK1700100B1-002	1			
3	INPUT SHAFT 4TH gear	CK1700100N1-003	1			
4	BEARING	CK1700100B1-004	1			
5	REAR INPUT SHAFT BEARING	CK1700100N1-005	1			
6	FRONT INPUT SHAFT BEARING	CK1700100N1-006	1			
7	BEARING	CK1700100N1-007	1			
8	OIL SEAL	CK1700100N1-008	1			
9	REAR CYLINDER REAR CIRCLIP	CK1700100N1-009	1			
10	FRONT CYLINDER REAR CIRLCIP	CK1700100N1-010	1			
11	BEARING	CK1700100B1-011	1			
12	FRONT CYLINDER REAR CLIRCLIP	CK1700100N1-012	1			
13	MAINSHAFT	CK1700100N1-013	1			
14	PRESSURE PLATE	CK1700100N1-014	1			
15	BOLT	CK1700100N1-015	1			
16	BEARING	CK1700100N1-016	1			
17	CIRCLIP	CK1700100N1-017	1			
18	CIRLCLIP	CK1700100N1-018	1			
19	BEARING	CK1700100N1-019	1			
20	COUNTER SHAFT	CK1700100N1-020	1			
21	COUNTER SHAFT 1st GEAR	CK1700100N1-021				
22	COUNTER SHAFT 2nd GEAR	CK1700100N1-022	**1**			
23	COUNTER SHAFT GEAR	CK1700100N1-023	1			
24	BEARING	CK1700100N1-024	1			
25	GASKET	CK1700100N1-025	1			
26	CIRCLIP	CK1700100N1-026	1			
27	NUT	CK1700100N1-027	1			
28	BEARING	CK1700100N1-028	1			
29	BEARING	CK1700100N1-029	1			
30	BEARING	CK1700100N1-030	1			
31	CIRCLIP	CK1700100N1-031	1			
32	CIRCLIP	CK1700100N1-032	1			
33	LOW SPEED SYNCHRONIZER	CK1700100N1-033	1			
34	HIGH SPEED SYNCHRONIZER	CK1700100N1-034	1			
35	5th SYNCHRONIZER	CK1700100B1-035	1			
36	1st SYNCHRONIZER	CK1700100N1-036	1			

FIGURE 20 MANUAL TRANSMISSION

NO	DESCRIPTION	PART NO.	ALL	SINGLE CAB	CREW CAB	NOTE
37	2nd SYNCHRONIZER	CK1700100N1-037	1			
38	HIGH SPEED SYNCHRONIZER	CK1700100N1-038	1			
39	RING	CK1700100N1-039	1			
40	SPRING	CK1700100N1-040	1			
41	SPRING	CK1700100N1-041	1			
42	SPRING	CK1700100N1-042	1			
43	CIRCLIP	CK1700100N1-043	1			
44	CIRCLIP	CK1700100N1-044	1			
45	CIRCLIP	CK1700100N1-045	1			
46	SLIDE BLOCK	CK1700100N1-046	1			
47	SLIDE BLOCK	CK1700100N1-047	1			
48	SLIDE BLOCK	CK1700100N1-048	1			
49	REVERSE GEAR SHAFT	CK1700100N1-049	1			
50	REVERSE IDLE GEAR	CK1700100N1-050	1			
51	SCREW	CK1700100N1-051	1			
52	WASHER	CK1700100N1-052	1			
53	WASHER	CK1700100N1-053	1			
54	SPEEDOMETER WORM	CK1700100N1-054	1			
55	WORN GEAR	CK1700100B1-055	1			
56	O'RING	CK1700100N1-056	1			
57	OIL SEAL	CK1700100N1-057	1			
58	HOP RING	CK1700100N1-058	**1**			
59	BOLT	CK1700100N1-059	1			
60	BALL	GB308-89	1			
61	RING	CK1700100N1-060	1			

FIGURE 21 TRANSMISSION CASE

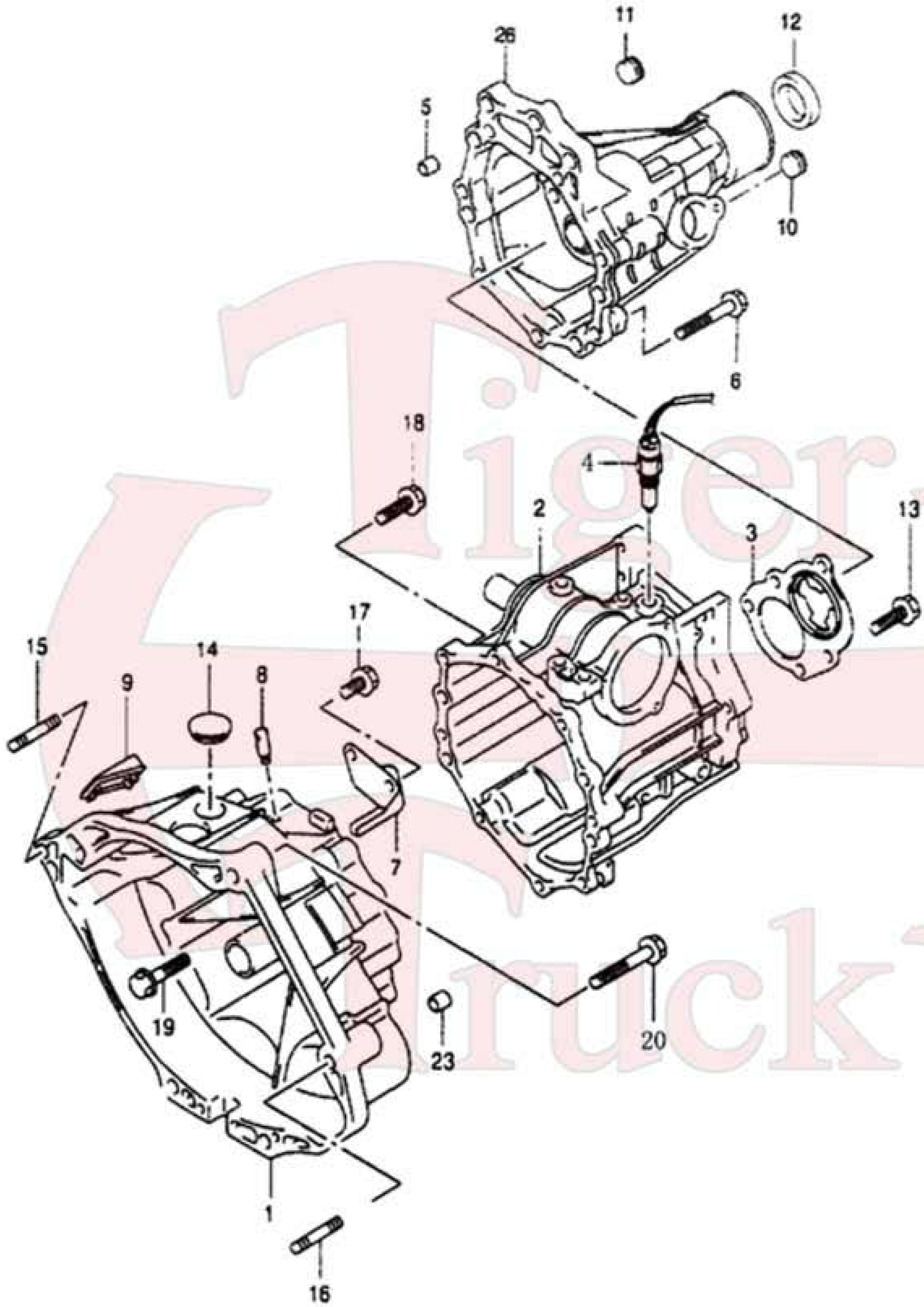

FIGURE 21 TRANSMISSION CASE

NO	DESCRIPTION	PART NO.	ALL	SINGLE CAB	CREW CAB	NOTE
1	FRONT CASE	CK1700100B1-061	1			
2	REAR CASE	CK1700100N1-062	1			
3	REAR CASE COVER	CK1700100N1-063	1			
4	BACK UP LAMP SWITCH	CK1700100N1-064	1			
5	LOCATING PIN	CK1700100N1-065	1			
6	BOLT	CK1700100N1-066	1			
7	INPUT SLOT	CK1700100N1-067	1			
8	EXHAUST PLUG	CK1700100N1-068	1			
9	DUST BOOT	CK1700100N1-069	1			
10	OIL DRAIN PLUG	CK1700100N1-070	1			
11	OIL DRAIN PLUG	CK1700100N1-071	1			
12	TAIL HOUSING OIL SEAL	CK1700100N1-072	1			
13	BOLT	CK1700100N1-073	5			
14	HOLE COVER	CK1700100N1-074	1			
15	STUD BOLT	CK1700100N1-075	1			
16	STUD BOLT	CK1700100N1-076	1			
17	BOLT	CK1700100N1-077	1			
18	BOLT	CK1700100N1-078	5			
19	BOLT	CK1700100N1-079	3			
20	LOCATING PIN	CK1700100N1-080	3			
21	PIN	CK1700100N1-081	4			
22	EXTENSION CASE	CK1700100N1-082	2			
23	SPEEDOMETER DRIVE GEAR	CK1700100N1-00	1			

FIGURE 22 GEAR SHIFTER Lever Case

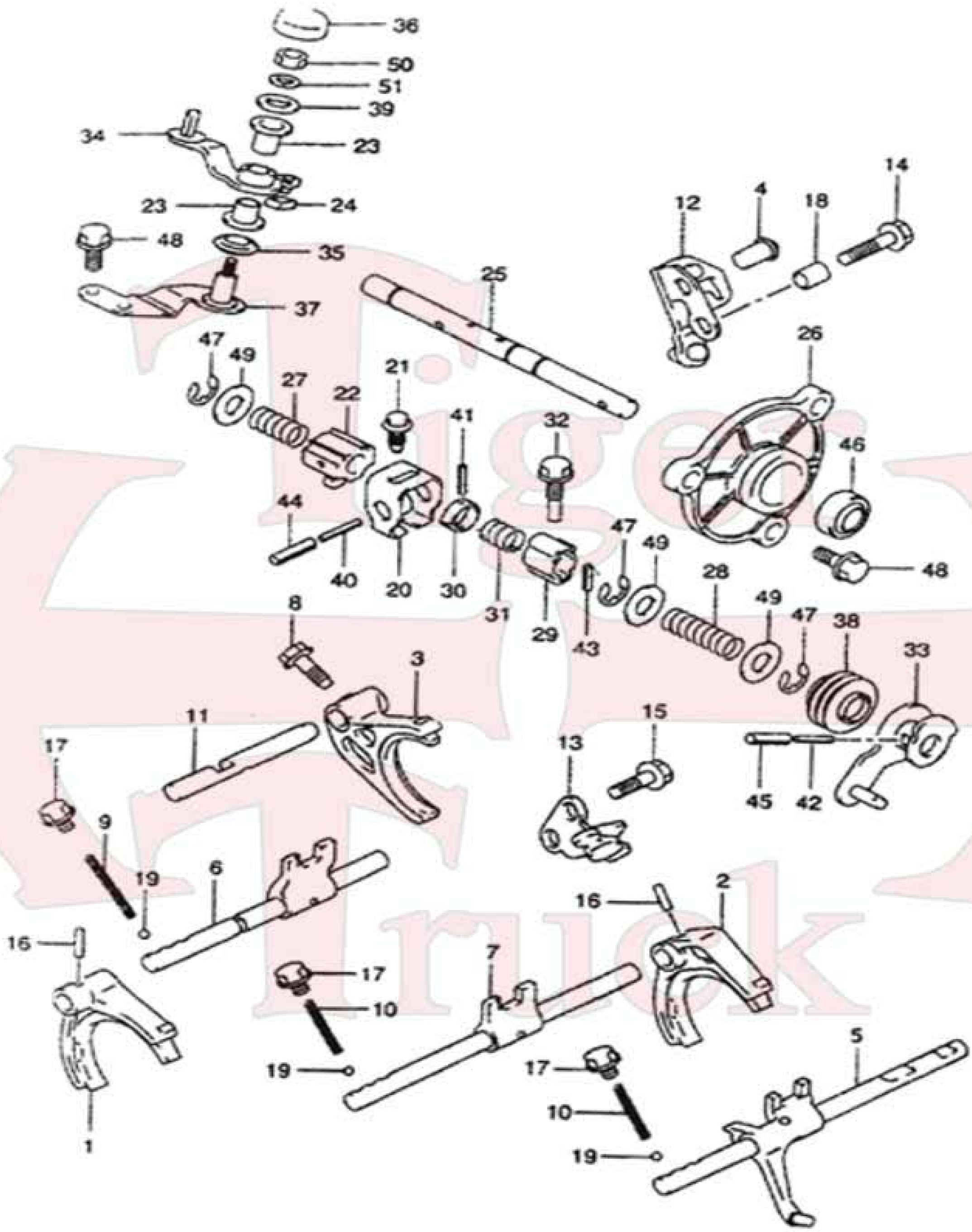

FIGURE 22 GEAR SHIFTER Lever Case

22	**ROCKER BAR**	**CK1700100N1-103**	**1**			
23	GASKET	CK1700100N1-104	2			
24	GASKET	CK1700100N1-105	1			
25	GEAR SHAFT	CK1700100N1-106	1			
26	BUIDE BOX	CK1700100N1-107	1			
27	SPRING	CK1700100N1-108	1			
28	SPRING	CK1700100N1-109	1			
29	CAM	CK1700100N1-110	1			
30	CAM SEAT	CK1700100N1-111	1			
31	RETURN SPRING	CK1700100N1-112	1			
32	BOLT	CK1700100N1-113	1			
33	ROCKER ARM	CK1700100N1-114	1			
34	ROCKER ARM	CK1700100N1-115	1			
35	DUST BOOT	CK1700100N1-116	1			
36	DUST BOOT	CK1700100N1-117	1			
37	RELOCATION ROCKER BRACKET	CK1700100N1-118	1			
38	DUST BOOT	CK1700100N1-119	1			
39	WASHER	CK1700100N1-120	1			
40	PIN	CK1700100N1-121	1			
41	CAM SEAT	CK1700100N1-122	1			
42	PIN	CK1700100N1-123	1			
43	CAM PIN	CK1700100N1-124	1			
44	PIN	CK1700100N1-125	1			
45	PIN	CK1700100N1-126	1			
46	OIL SEAL	CK1700100N1-127	1			
47	E-RING	CK1700100N1-128	1			
48	BOLT	CK1700100N1-129	1			
49	WASHER	CK1700100N1-130	1			
50	NUT	GB6170-86	1			
51	WASHER	GB859-87	1			
51	WASHER	GB859-87	1			

FIGURE 23 EMISSION CONTROL

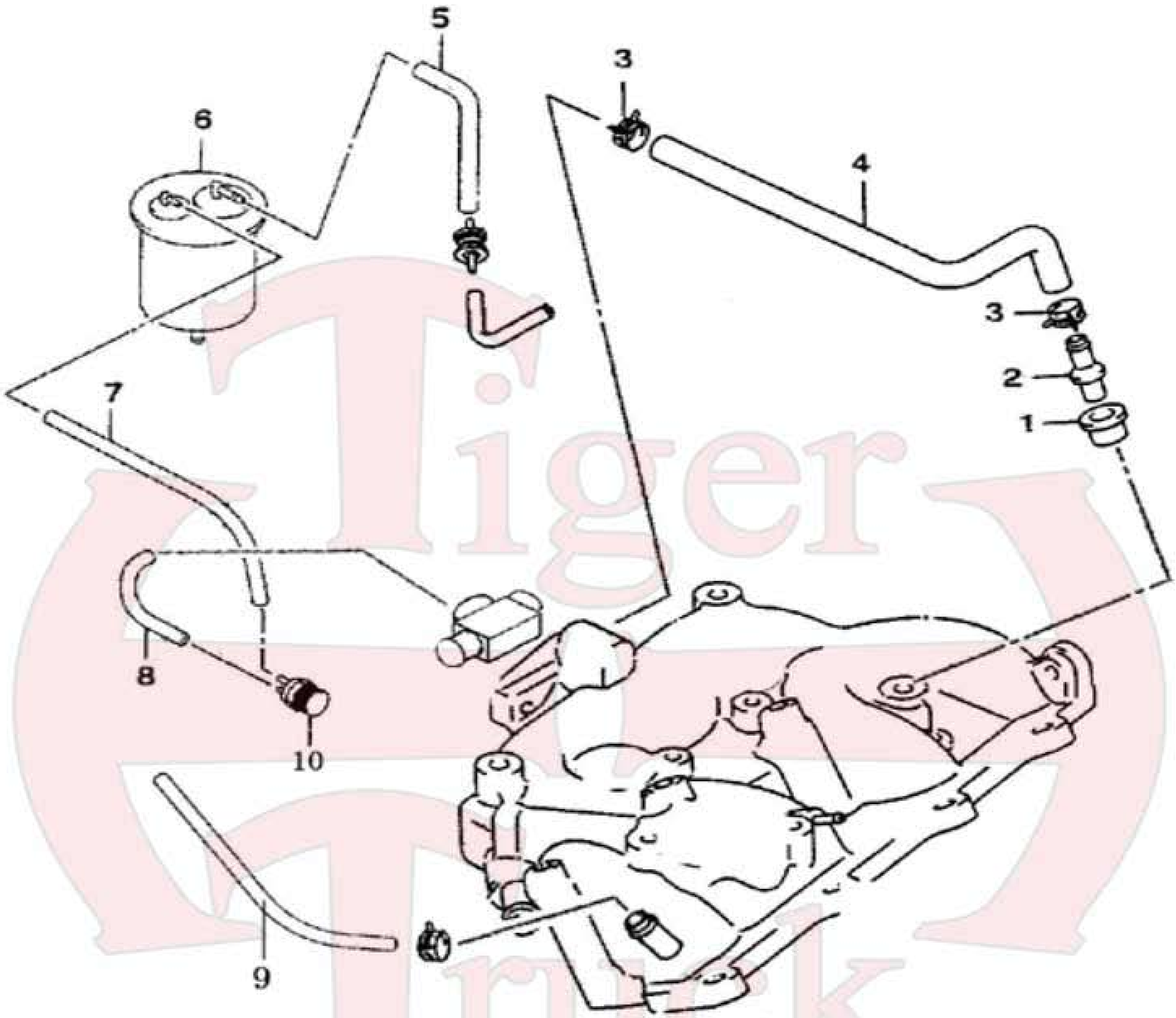

FIGURE 23 EMISSION CONTROL

NO	DESCRIPTION	PART NO.	ALL	SINGLE CAB	CREW CAB	NOTE
1	PVC VALVE SEAL	1014013-01	1			
2	PVC VALVE	1014020-01	1			
3	CLIP	CK1100001N1-003	2			09401-13417
4	PVC VALVE VENT PIPE	CK1100001N1-004	1			1014112A8
5	BI-DIRECTIONAL VALVE W/ATTACHMENT	CK1101040N1	1			
6	CANISTER ASM	CK1101800N1	1			1101800-07
7	TUBE I	CK1101801N1	1			
8	FUEL VAPOR HOSE II	CK1104018N1	1			
9	CRANKCASE EMISSION PIPE	CK1100001N1-005				1014109A9
10	CANISTER CONTROL VALVE	CK3700510N1	1			
	EVAP CANISTER CONTROL VALVE					1101100B3

Tiger Truck

FIGURE 24 FUEL PUMP

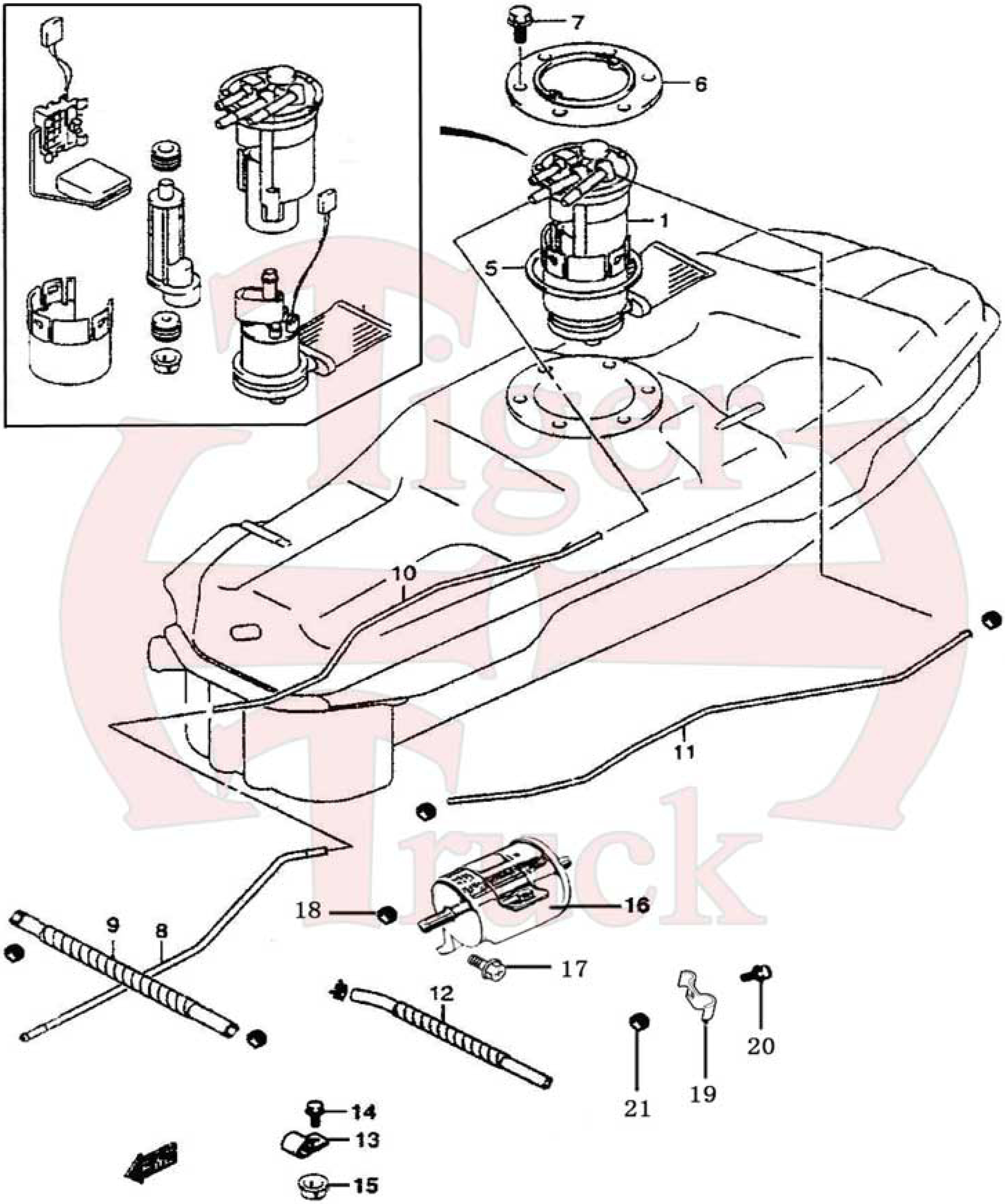

FIGURE 24 FUEL PUMP - GASOLINE

NO	DESCRIPTION	PART NO.	ALL	SINGLE CAB	CREW CAB	NOTE
1	FUEL PUMP & SENSOR LEVEL ASM	CK3700470N1	1			
5	FUEL PUMP MOUNTING GASKET	CK1100001N1-009	1			1106011-01
6	FUEL PUMP PLATE	CK1101 013N1	1			1106012-01
7	BOLT	GB/T5781-2000	6			
8	RETURN HOSE	CK1104011N1	1			
9	RETURN HOSE (ELECTRONIC SPRAY II)	CK1104017N1	1			
10	RETURN HOSE (ELECTRONIC SPRAY I)	CK1104014N1	1			
11	RETURN HOSE (ELECTRONIC SPRAY I)	CK1104013N1	1			
12	RETURN HOSE (ELECTRONIC SPRAY II)	CK1104016N1	1			
13	PIPE LOCK BRACKET	CK1104023N1	1			
14	BOLT	GB/T5781-2000	1			
15	NUT	GB/T41-2000	1			
16	FUEL FILTER	CK1117010N1	1			1117010-03
17	BOLT	GB/T5781-2000	2			
18	NUT	GB/T41-2000	2			
19	CLIP	CK1104021N1	2			
20	BOLT	GB/T5871-2000	2			
21	NUT	GB/T41-2000	2			

SEE PAGE 185 FOR FLEX FUEL INFORMATION

FIGURE 25 FUEL TANK

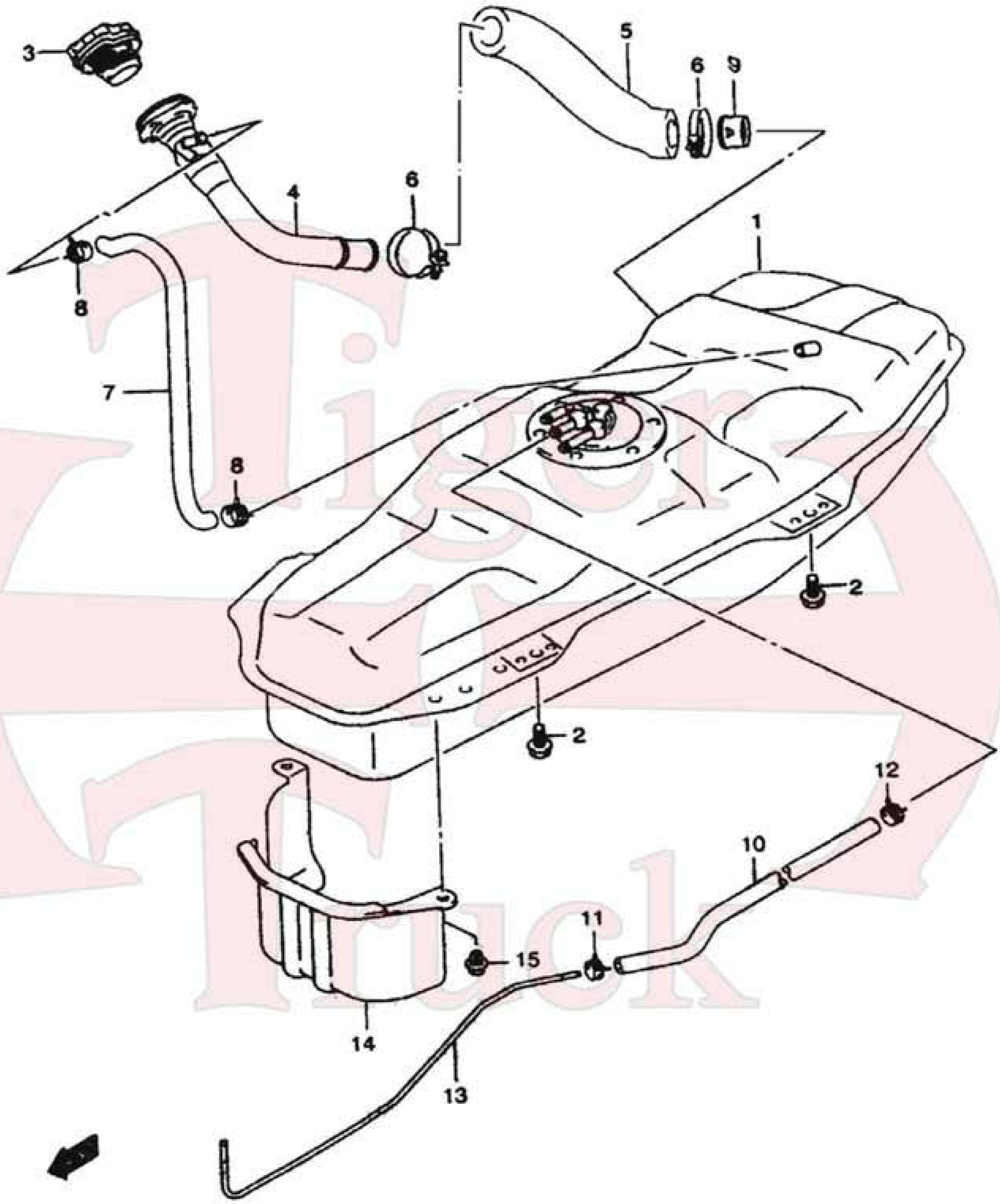

FIGURE 25 FUEL TANK - GASOLINE

NO	DESCRIPTION	PART NO.	ALL	SINGLE CAB	CREW CAB	NOTE
1	GAS TANK	CK1101100N1	1			
2	BOLT	GB/T5783-2000	4			
3	GAS CAP	CK1101300N1	1			
4	FUEL FILLER NECK	CK1101200N1	1			
5	FUEL FILLER HOSE	CK1101012N1	1			
6	HOSE CLAMP	QC/T621-1997	2			
7	FUEL RETURN HOSE	CK1104011N1	1			
8	HOSE CLAMP	CK1100001N1-010	1			09401-15401
9	FUEL SUCTION VALVE	CK1100001N1-011	2			89280-77A00
10	FUEL VAPOR HOSE	CK1104015N1	1			
11	HOSE CLAMP	CK1100001N1-012	1			09401-10403
12	HOSE CLAMP	CK1100001N1-013	1			09401-10401
13	FUEL VAPOR CONNECTION HOSE	CK1104012N1	1			
14	FUEL TANK SHIELD	CK1100001N1-014	1			79311-77A00
15	CLAMP	CK1100001N1-015	2			09409-08327

SEE PAGE 185 FOR FLEX FUEL INFORMATION

FIGURE 26 AIR FILTER HOUSING

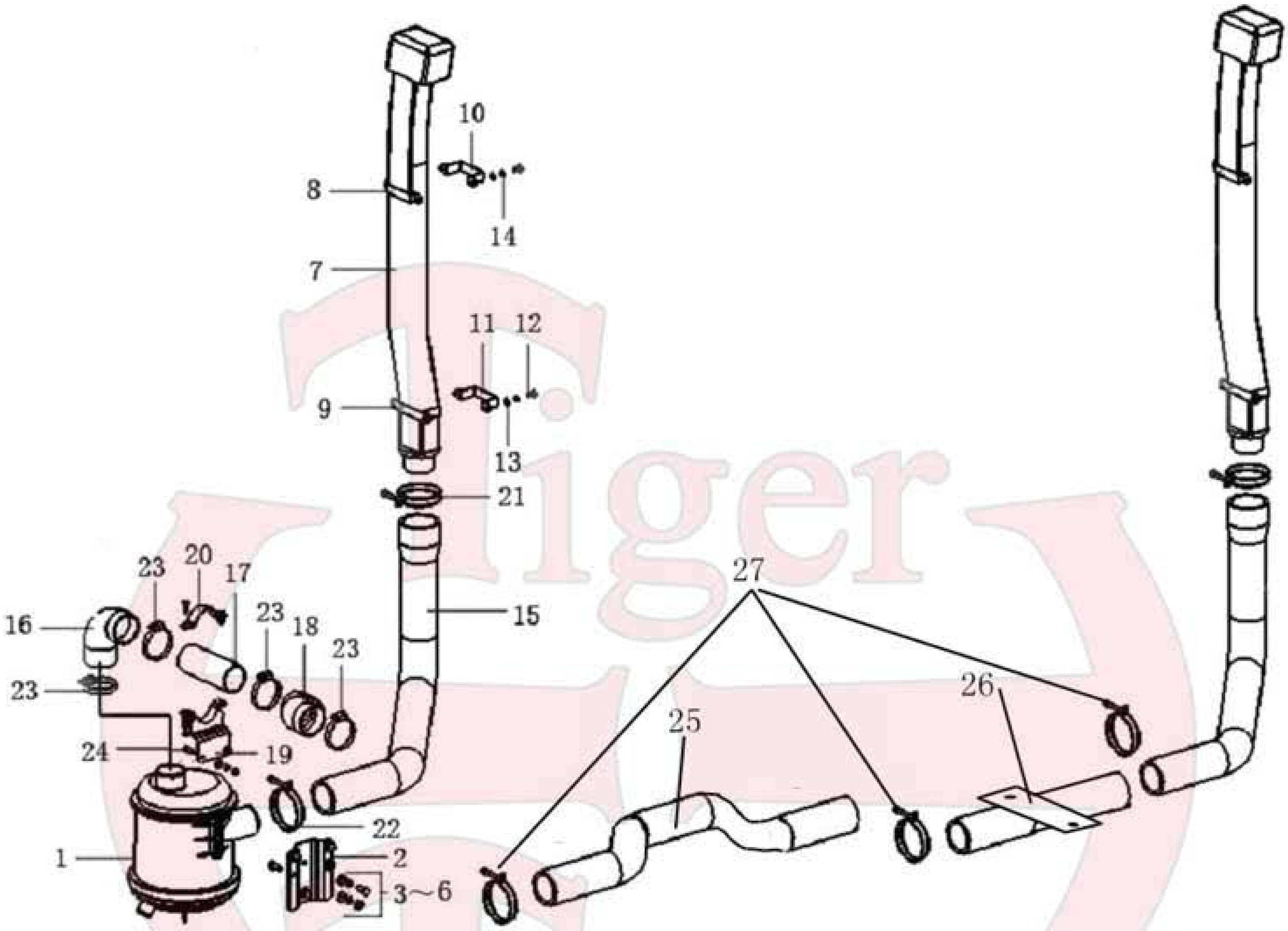

FIGURE 26 AIR FILTER HOUSING

NO	DESCRIPTION	PART NO.	ALL	SINGLE CAB	CREW CAB	NOTE
1	AIR FILTER HOUSING ASM	CK1109100N1	1			
2	AIR CLEANER BRACKET MODULE	CK1109110N1	1			
3	NUT	GB/T13680-1992	4			
4	BOLT	GB/T5781-2000	4			
5	WASHER	GB/T97.1-2002	4			
6	WASHER	GB/T93-1987	4			
7	INTAKE PIPE	CK1109301N1	1			
8	INTAKE PIPE BRACKET 1	CK1109302N1	1			
9	INTAKE PIPE BRACKET 2	CK1109303N1	1			
10	INTAKE PIPE BUCKLE 1	CK1109304N1	1			
11	INTAKE PIPE BUCKLE 2	CK1109305N1	1			
12	BOLT	GB/T5781-2000	4			
13	WASHER	GB/T97.1-2002	4			
14	WASHER	GB/T93-1987	4			
15	INTAKE PIPE 1	CK1109011N1	1			
16	INTAKE PIPE 2	CK1109012N1	1			
17	INTAKE PIPE 3	CK1109013N1	1			
18	INTAKE PIPE 4	CK1109014N1	1			
19	INTAKE PIPE HOOP BRACKET	CK1109015N1	1			
20	INTAKE PIPE HOOP COVER	CK1109016N1	1			
21	CLAMP	Q672B70	1			
22	CLAMP	Q672B64	1			
23	CLIP	09402-60501	4			
24	BOLT	GB/T5781-2000	4			
25	AIR CLEANER INTAKE PIPE	CK1109019N2			1	
26	MIDDLE INTAKE PIPE ASM	CK1109400N2			1	
27	BOLT	GB/T5781-2000			2	
28	WASHER	GB/T97.1-2002			2	
29	WASHER	GB/T93-1987			2	
30	CLAMP	Q672B64			3	
	AIR FILTER	CK1109100N1	1			

FIGURE 27 EXHAUST & MUFFLER

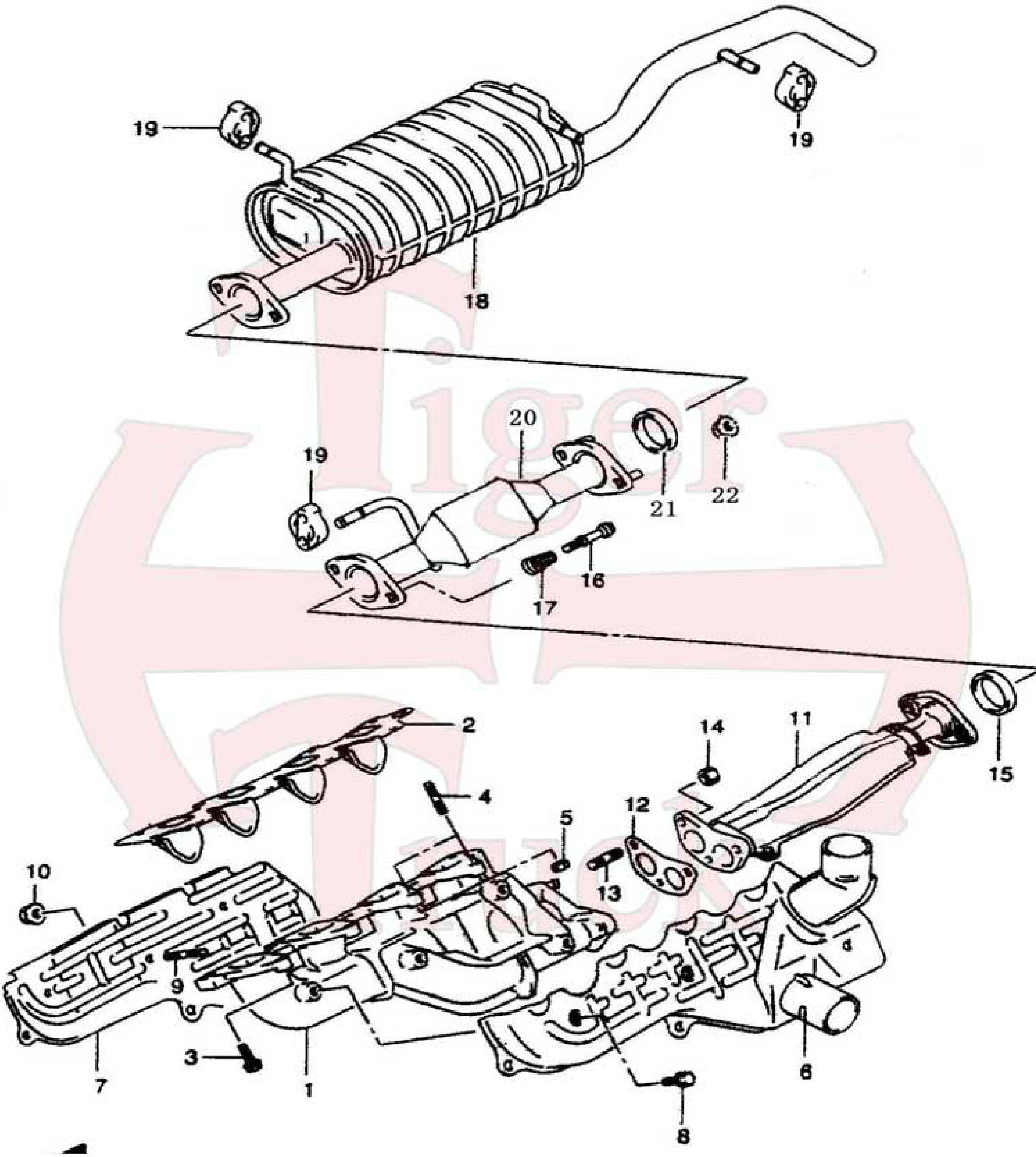

FIGURE 27 EXHAUST & MUFFLER

NO	DESCRIPTION	PART NO.	ALL	SINGLE CAB	CREW CAB	NOTE
1	EXHAUST MANIFOLD	CK1200001N1-001	1			1008010A8
2	EXHAUST GASKET	CK1200001N1-002	1			1000054D
3	BOLT	CK1200001N1-003	6			01550-08253
4	STUD BOLT	CK1200001N1-004	2			01411-08253
5	NUT	CK1200001N1-005	2			08310-00083
6	EXHAUST PIPE COVER	CK1200001N1-006	1			14120-77A00
7	EXHAUST PIPE COVER LOWER	CK1200001N1-007	1			14130-77A00
8	BOLT	CK1200001N1-008	7			09103-06168
9	STUD BOLT	CK1200001N1-009	4			01411-06123
10	NUT	CK1200001N1-010	4			08316-35063
11	EXHAUST PIPE HEADER	CK1200001N1-011	1			14190-77A00
12	EXHAUST GASKET (HEADER TO HEADER PIPE)	CK1200001N1-012	1			1201010-01
13	STUD BOLT	CK1200001N1-013	3			01411-10253
14	NUT	CK1200001N1-014	3			09159-10016
15	EXHUASET DONUT	1201041-01	1			
16	MUFFLER FLANGE BOLT	CK1200109N1	2			
17	EXHAUST PIPE SPRING	CK1200108N1	2			
18	MUFFLER	CK1201100N1	1			
19	MUFFLER HANGAR	CK1200101N1	4			1201021-01
20	CATALYTIC CONVERTOR	CK1205100N1	1			1201300-02
21	EXHUASET DONUT	CK1200011N1	1			1201041-01
22	NUT	GB/T6170-2000	2			

FIGURE 28 RADIATOR

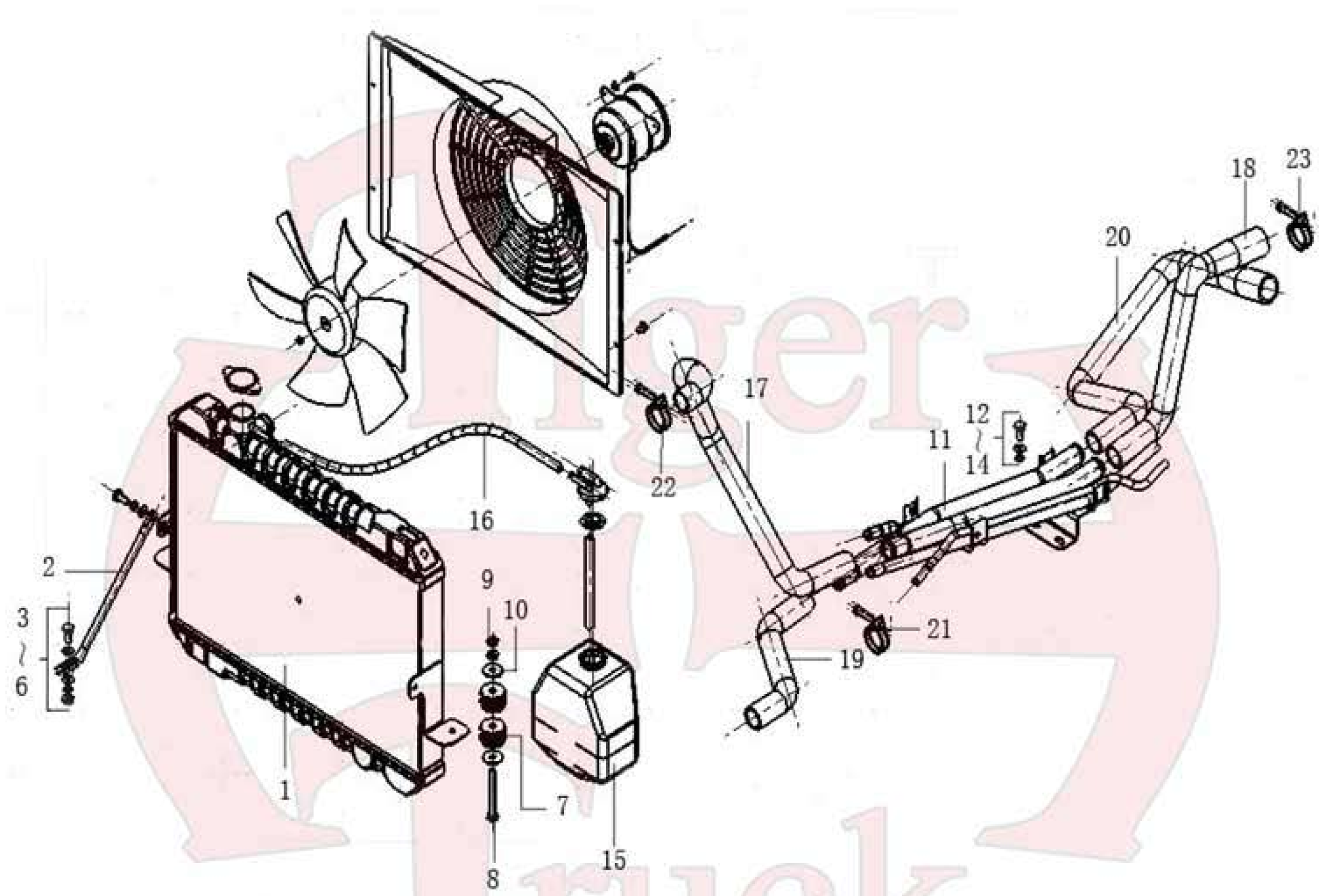

FIGURE 28 RADIATOR

NO	DESCRIPTION	PART NO.	ALL	SINGLE CAB	CREW CAB	NOTE
1	RADIATOR	CK1301100N1	1			
2	RADIATOR BRACE	CK1301101N1	2			
3	BOLT	GB/T5781-2000	4			
4	NUT	GB/T41-2000	4			
5	WASHER	GB/T93-1987	4			
6	WASHER	GB/T97.1-2002	4			
7	MOUNTING PAD	CK1300104H1	4			
8	BOLT	GB/T5780-2000	2			
9	NUT	GB/T41-2000	4			
10	WASHER	GB/T96.2-2002	2			
11	FLOOR WATER PIPE	CK1303900N1	1			
12	BOLT	GB/T5781-2000	4			
13	WASHER	GB/T93-1987	4			
14	WASHER	GB/T97.1-2002	4			
15	WATER RESERVOIR	CK1303110N1	1			
16	HOSE	CK1303111N1	1			
17	UPPER WATER HOSE (FRONT)	CK1303101N1	1			
18	UPPER WATER HOSE (REAR)	CK1303102N1	1			
19	LOWER WATER HOSE (FRONT)	CK1303103N1	1			
20	LOWER WATER HOSE (REAR)	CK1303104N1	1			
21	CLAMP	Q672B32	4			
22	CLAMP	Q672B35	2			
23	CLAMP	Q672B38	2			
	FAN, SHROUD, MOTOR ASM		1			1308010-01

FIGURE 29 GEAR SHIFTER

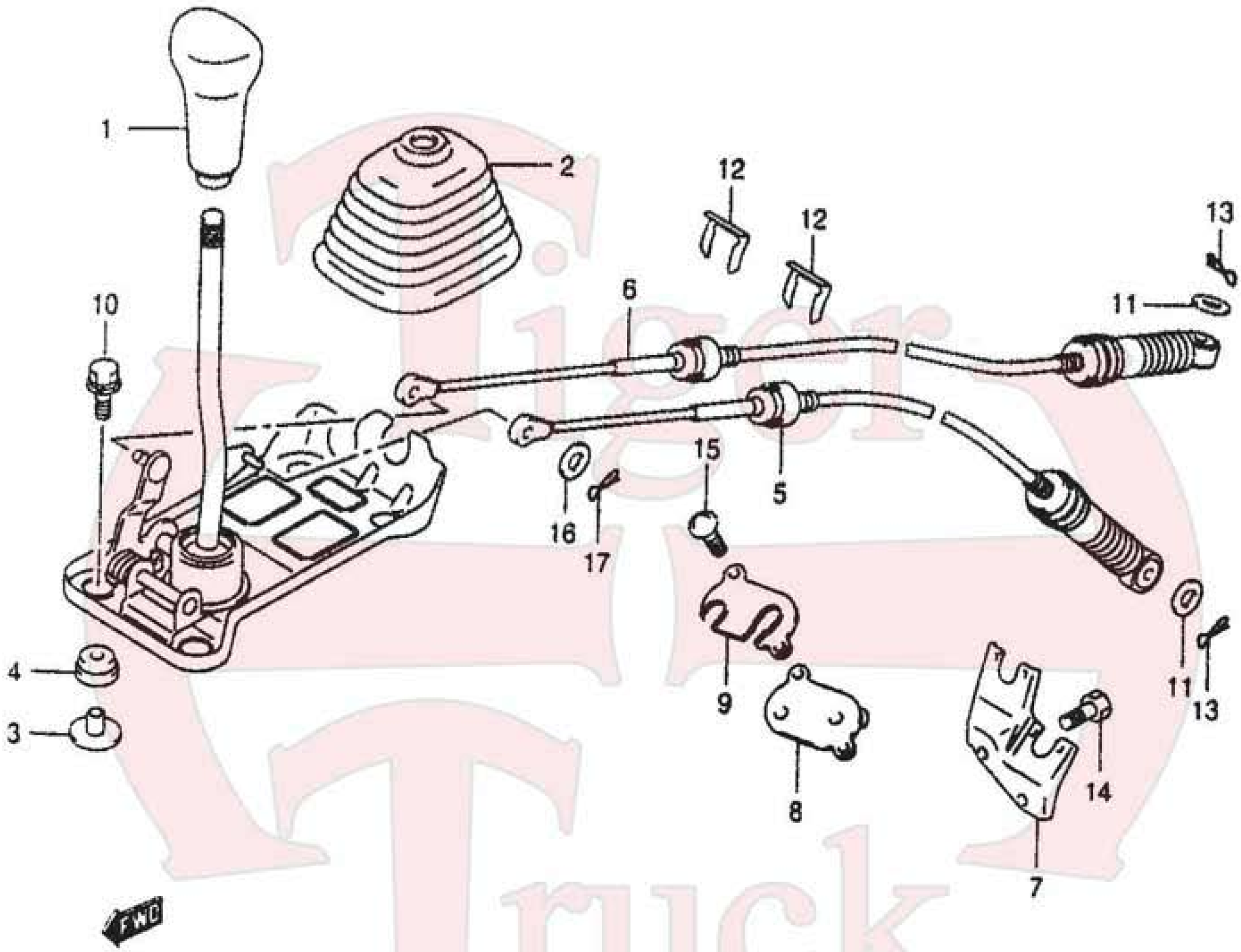

FIGURE 29 GEAR SHIFTER

NO	DESCRIPTION	PART NO.	ALL	SINGLE CAB	CREW CAB	NOTE
1	SHIFTER KNOB	CK1703001N1-001	1			
2	SHIFTER BOOT	CK1703001N1-002	1			
3	GASKET	CK1703001B1-003	4			
4	PAD	CK1703001N1-004	4			
5	GEAR SELECT CABLE	CK1703200N1	1			
6	GEAR SHIFT CABLE	CK1703300N1	1			
7	CABLE GUIDE	CK1703001N1-005	1			28391-77A00
8	GEAR GABLE GROM PLATE	CK1703202N1	1			
9	RUBBER PLATE	CK1703001N1-006	1			28395-77A00
10	BOLT	CK1703001N1-007	4			09118-08119
11	WASHER	GB/T97.1-2002	2			
12	E CLIP	CK1703001N1-008	2			09383-19001
13	COTTER PIN	GB/T91-2000	2			
14	BOLT	GB/T5781-2000	2			
15	BOLT	GB/T5781-2000	2			
16	WASHER	GB/T97.1-2002	1			
17	COTTER PIN	GB/T91-2000	1			
	AUTOMATIC SHIFTER	TT-500D	A/R			
	SHIFTER CABLE AUTOMATIC	SC63311703300-55	A/R			

FIGURE 30 DRIVESHAFT

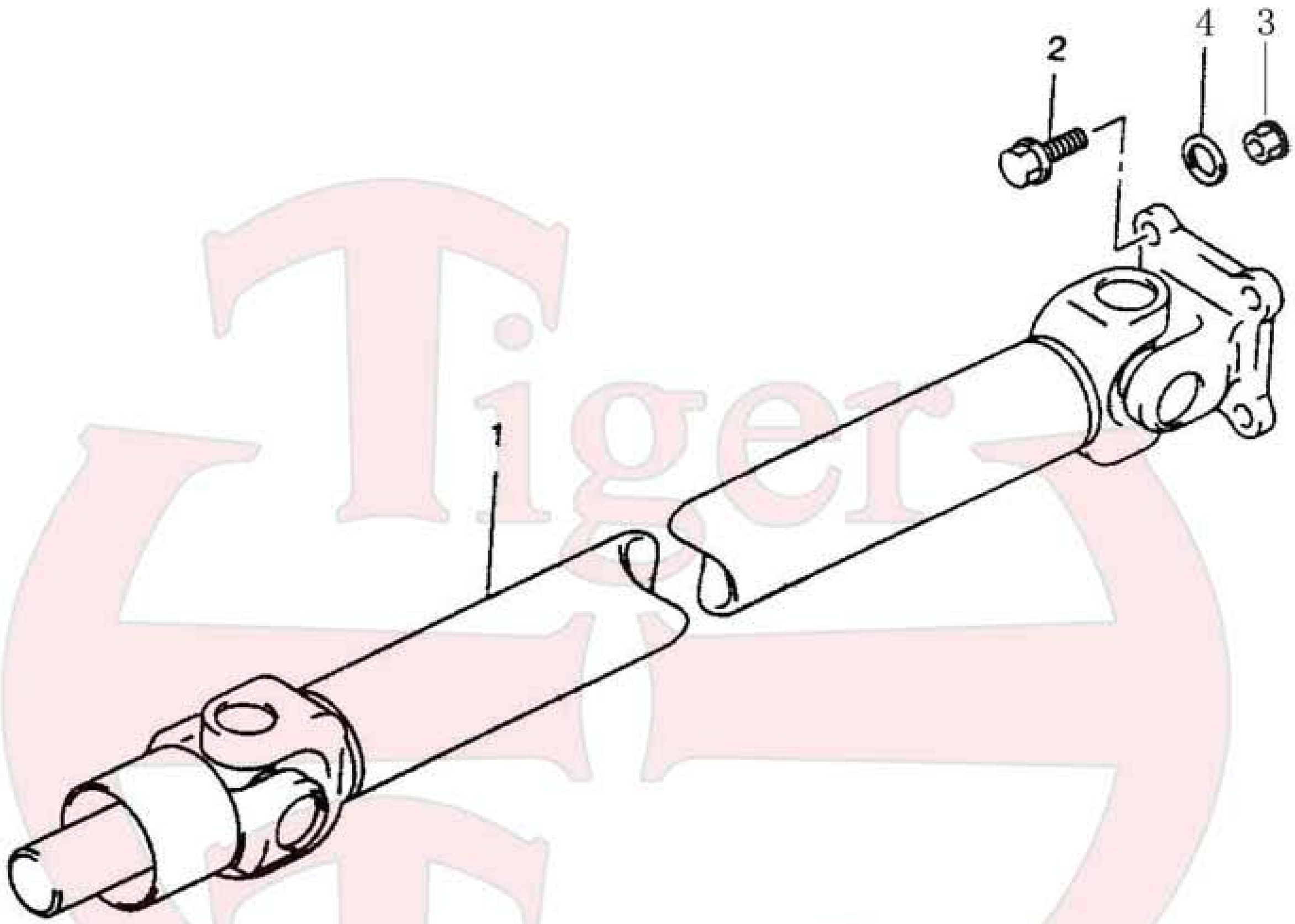

Tiger Truck

FIGURE 30 DRIVE SHAFT

NO	DESCRIPTION	PART NO.	ALL	SINGLE CAB	CREW CAB	NOTE
1	DRIVESHAFT	CK2200100N1	1			
2	REAR BOLT	CK2200012N1	4			
3	NUT	GB/T6171-2000	4			
4	WASHER	GB/T93-1987	4			

Tiger Truck

FIGURE 31 REAR AXLE

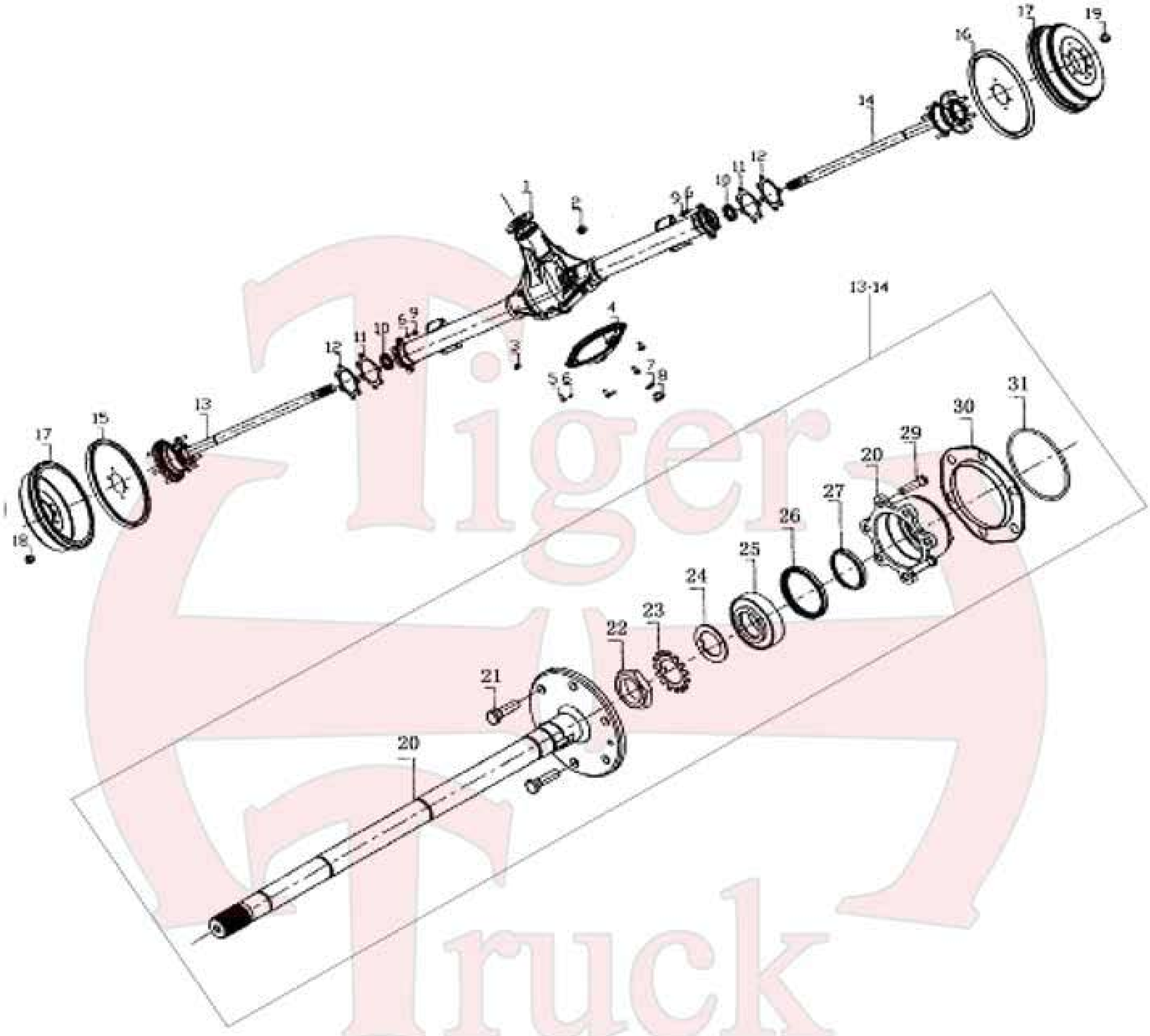

FIGURE 31 REAR AXLE

NO	DESCRIPTION	PART NO.	ALL	SINGLE CAB	CREW CAB	NOTE
	REAR AXLE ASM W/BRAKES	CK2400001B1	1			
1	MASTER REDUCER	CK2400001N1-001	1			2402000KY
2	BOLT	CK2400001N1-002	1			24QB-01070
3	VENT COVER	CK2400001N1-003	1			24QA-01065
4	REAR COVER	CK2400001N1-004	1			2401030KY
5	BOLT	Q150B1022	8			
6	WASHER	Q40310	16			
7	WASHER	CK2400001N1-005	1			24QA-01062
8	BOLT	CK2400001N1-006	1			TLB6500-2401034
9	NUT	CK2400001N1-007	8			
10	SEMI-AXLE INSIDE SEAL	CK2400001N1-008	2			24QM-01090
11	GASKET	CK2400001N1-009				24QM-01076-01082
12	RUBBER GASKET	CK2400001N1-010	2			24QM-01085
13	SEMI-SHAFT LH	CK2400001N1-011	1			2403300KY
14	SEMI-SHAFT RH	CK2400001N1-012	1			2403200KY
15	REAR BRAKE LH	CK2400001N1-013	1			3502010KY
16	REAR BRAKE RH	CK2400001N1-014	1			3502020KY
17	REAR BRAKE DRUM	CK2400001N1-015	1			3502075KY
18	NUT	CK2400001N1-016	6			BJ5028G-2403054
19	NUT L	CK2400001N1-017	6			BJ5028G-2403154
20	REAR AXLE SEMI-SHAFT	CK2400001N1-018	2			2403065KY
21	BOLT L	CK2400001N1-019	6			BJ5028G-2403163
22	BOLT R	CK2400001N1-020	6			BJ5028G-2403163
23	RETAINER LOCK	CK2400001N1-022	2			24QM-03068
24	SPRING	CK2400001N1-023	2			24QM-03066

FIGURE 31 REAR AXLE

NO	DESCRIPTION	PART NO.	ALL	SINGLE CAB	CREW CAB	NOTE
25	ROLLER BEARING	GB/T297-97	2			
26	SEMI-SHAFT OUTER SEAL	CK2400001N1-024	2			24QM-03070
27	SPACER TUBE	CK2400001N1-025	2			24QM-03062
28	SEMI-SHAFT SEAT	CK2400001N1-026	2			24QM-03061
29	BOLT	CK2400001N1-027	8			24QA-01088
30	DUST BOOT	CK2400001N1-028	2			24QM-03064
31	GASKET	CK2400001N1-029	2			24QM-03069

Tiger Truck

FIGURE 32 DIFFERENTIAL GEAR

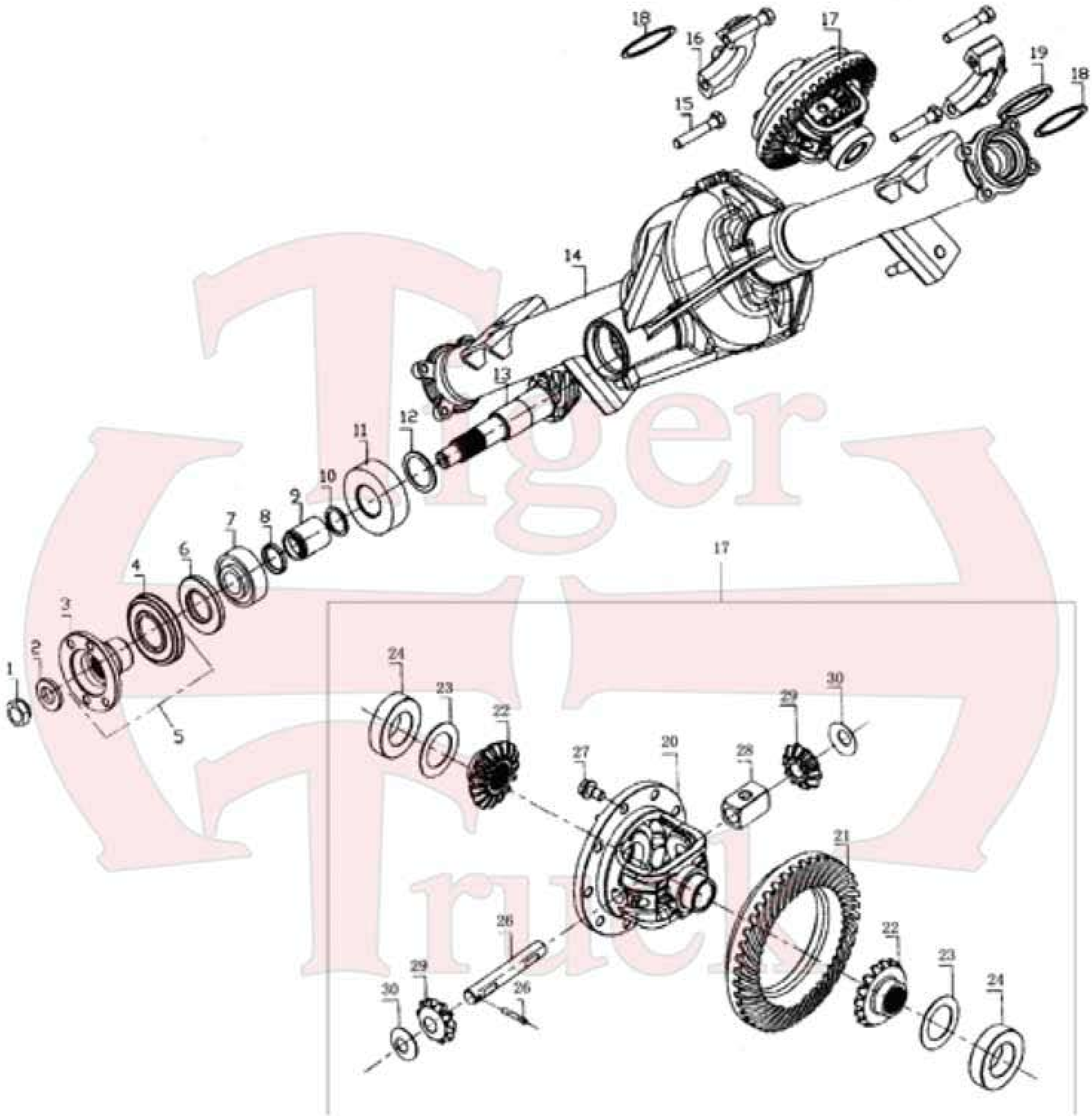

FIGURE 32 DIFFERENTIAL GEAR

NO	DESCRIPTION	PART NO.	ALL	SINGLE CAB	CREW CAB	NOTE
29	THRUST BLOCK	CK2400001N1-054	1			2402QM-332
30	DIFFERENTIAL PINION	CK2400001N1-055	1			
31	WASHER	CK2400001N1-056	2			

Tiger Truck

FIGURE 33 FRAME

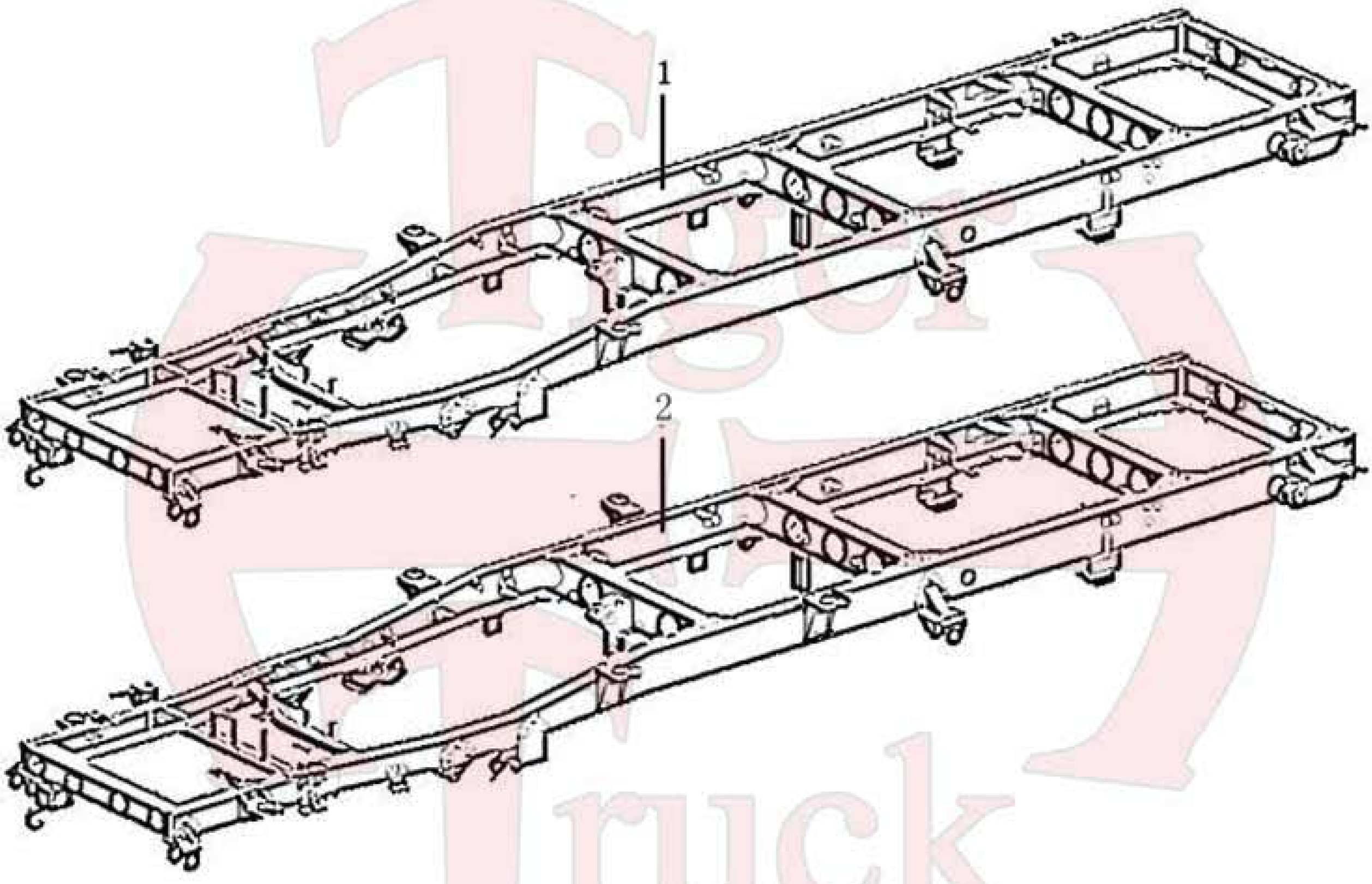

FIGURE 33 FRAME

NO	DESCRIPTION	PART NO.	ALL	SINGLE CAB	CREW CAB	NOTE
1	FRAME	CK2800000N1		1		
2	FRAME	CK2800000N2			1	

Tiger Truck

FIGURE 34 FRONT SUSPENSION

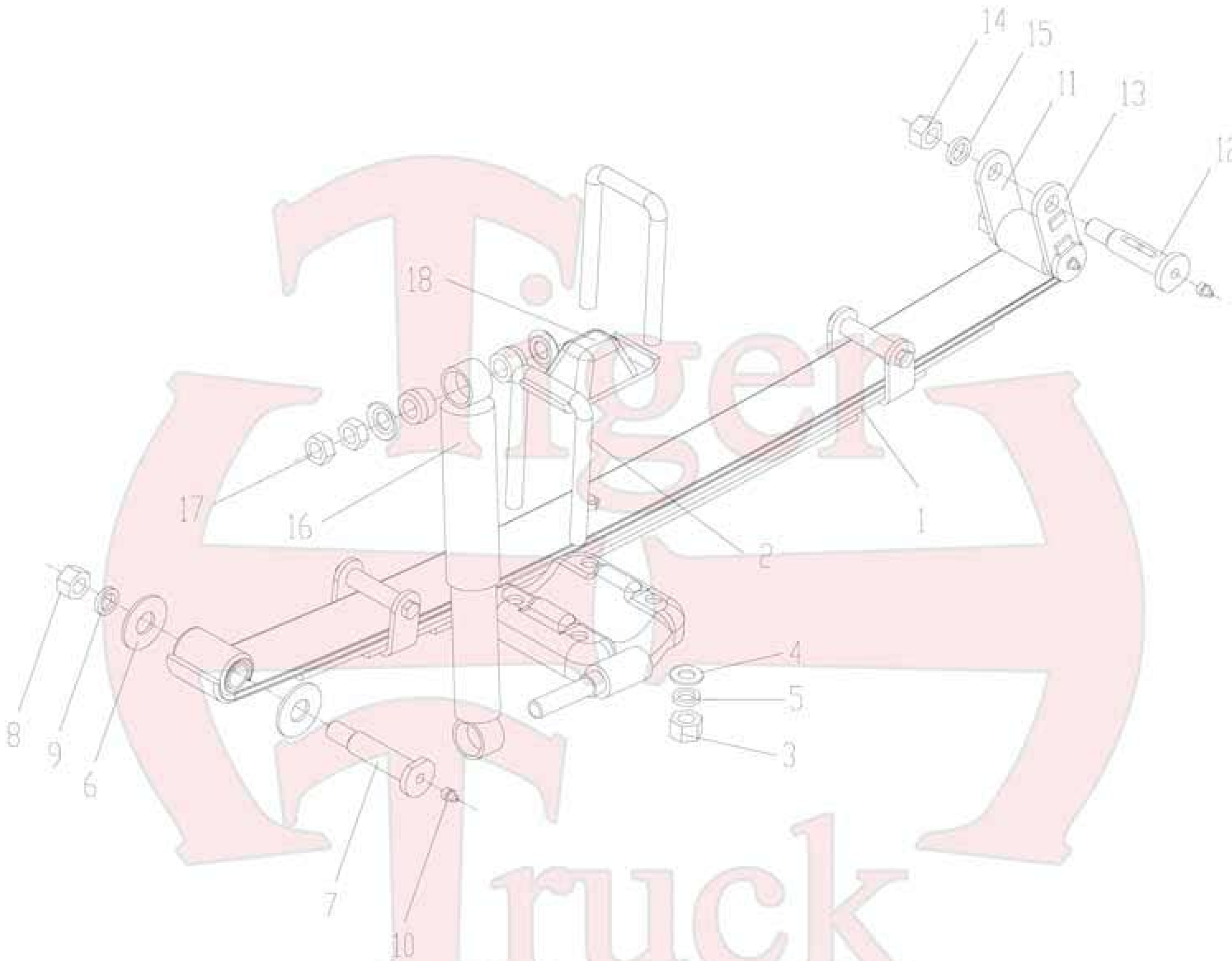

FIGURE 34 FRONT SUSPENSION

NO	DESCRIPTION	PART NO.	ALL	SINGLE CAB	CREW CAB	NOTE
1	FRONT LEAF SPRING	CK2901100N1	2			
2	FRONT "U" BOLT	CK2901011N1	4			
3	FRONT LEAF SPRING NUT	CK2901012N1	8			
4	WASHER	B/T97.1-2002	8			
5	WASHER	GB/T93-1987	8			
6	FRONT LEAF SPRING FRONT BRACKET SPACER	CK2901013N1	4			
7	FRONT LEAF SPRING FRONT PIVOT SHAFT	CK2901014N1	2			
8	NUT	GB/T6171-2000	2			
9	WASHER	GB/T93-1987	2			
10	GREASE NIPPLE	QC/T407-1999	6			
11	FRONT LEAF SPRING SHACKLE	CK2901015N1	2			
12	FRONT LEAF SPRING EAR PIVOT SHAFT	CK2901016N1	4			
13	FRONT LEAF SPRING SHACKLE	CK2901017N1	2			
14	NUT	GB/T6171-2000	4			
15	WASHER	GB/T93-1987	4			
16	FRONT SHOCK ABSORBER	CK2905100N1	2			
17	NUT	GB/T6170-2000	4			
18	FRONT BUMPING BLOCK ASM	CK2901110N1	2			
19	FRONT LEAF SPRING LH LOWER FASTENING PLATE	CK2901120N1	1			
20	NUT	GB/T6170-2000	2			
21	FRONT LEAF SPRING RH LOWER FASTENING PLATE	CK2901130N1	1			
22	NUT	GB/T6170-2000	2			

FIGURE 35 REAR SUSPENSION

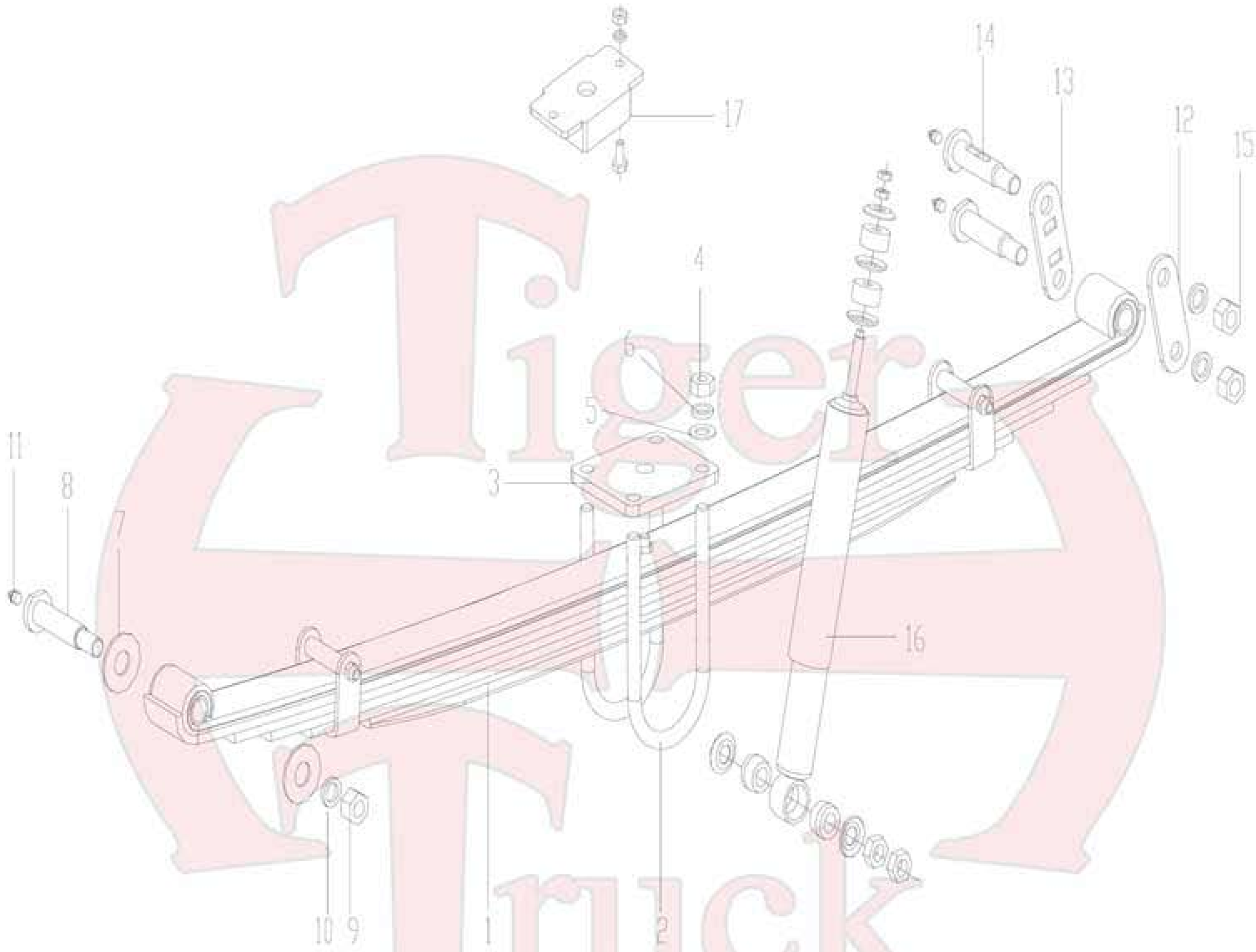

FIGURE 35 REAR SUSPENSION

NO	DESCRIPTION	PART NO.	ALL	SINGLE CAB	CREW CAB	NOTE
1	REAR LEAF SPRING	CK2911100N1	2			
2	REAR "U" BOLT	CK2911011N1	4			
3	REAR LEAF SPRING CAP	CK2911012N1	2			
4	FRONT LEAF NUT	CK2901012N1	8			
5	WASHER	GB/T97.1-2002	8			
6	WASHER	GB/T93-1987	8			
7	REAR LEAF SPRING FRONT BRACKET SPACER	CK2901013N1	4			
8	REAR LEAF SPRING FRONT PIVOT SHAFT	CK2901014N1	2			
9	NUT	GB/T6171-2000	4			
10	WASHER	GB/T93-1987	4			
11	GREASE NIPPLE	QC/T407-1999	4			
12	REAR LEAF SPRING SHACKLE (INSIDE)	CK2911013N1	2			
13	REAR LEAF SPING SHACKLE (OUTSIDE)	CK2911014N1	2			
14	REAR LEAF SPRING REAR PIVOT SHAFT	CK2901016N1	4			
15	NUT	GB/T6171-2000	2			
16	REAR SHOCK ABSORBER	CK2915100N1	2			
17	REAR BUMPING BLOCK ASM	CK2920100F1	2			

FIGURE 36 FRONT AXLE

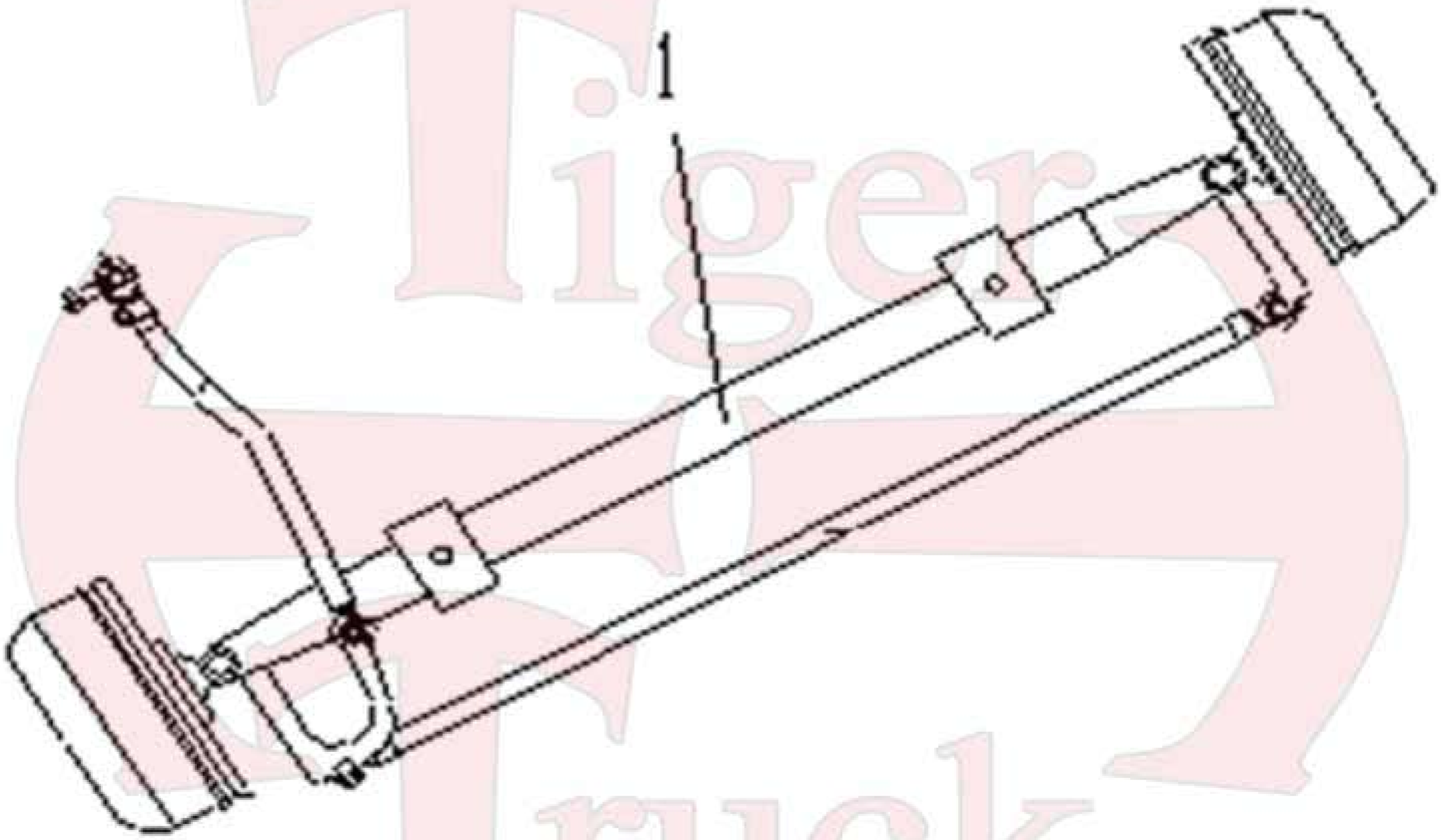

FIGURE 36 FRONT AXLE

NO	DESCRIPTION	PART NO.	ALL	SINGLE CAB	CREW CAB	NOTE
1	FRONT AXLE ASM W/BRAKES	CK3000100N1				INCLUDES TIE ROD AND DRAG LINK ASM

Tiger Truck

FIGURE 37 FRONT AXLE & BRAKE

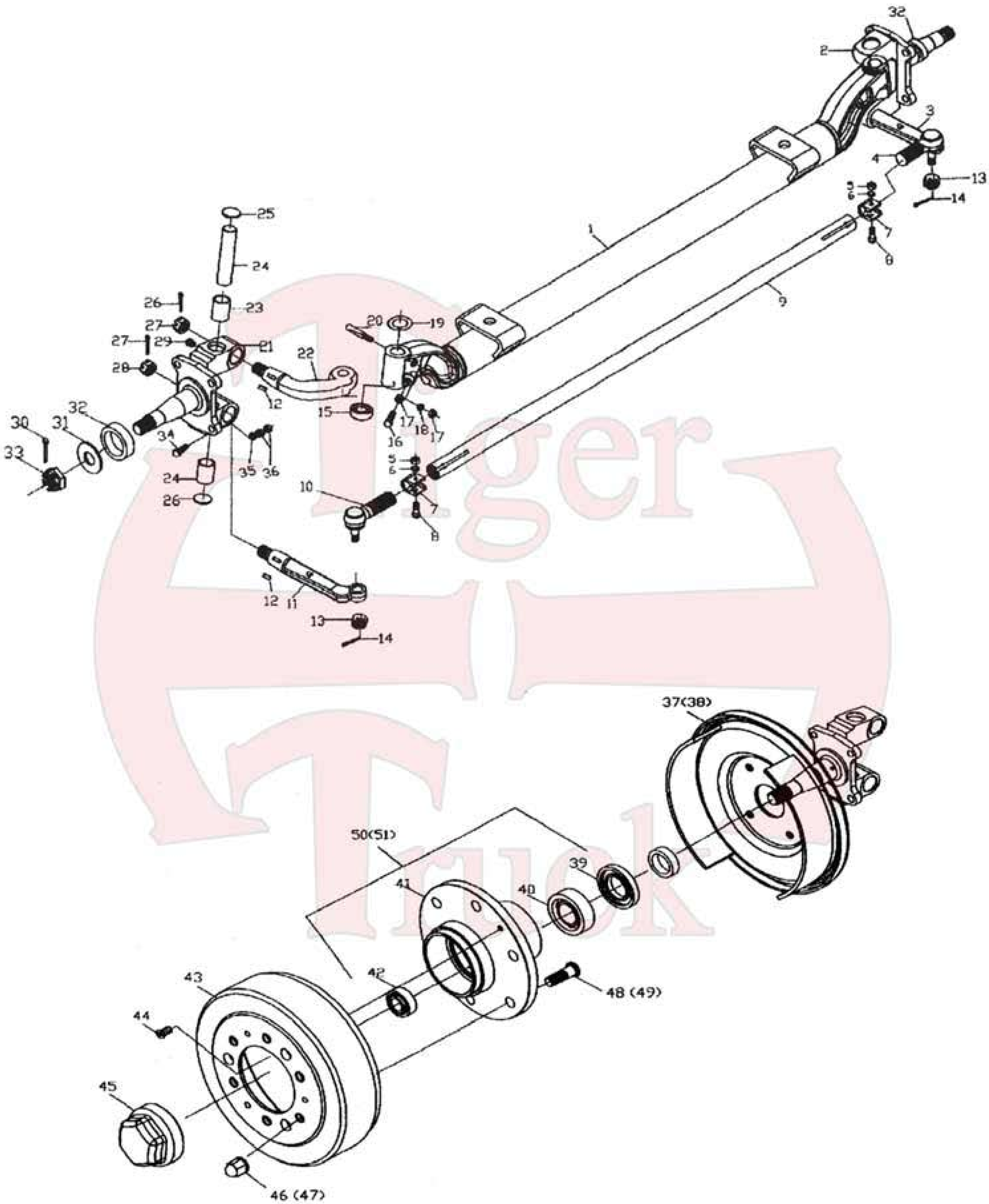

FIGURE 37 FRONT AXLE & BRAKE

NO	DESCRIPTION	PART NO.	ALL	SINGLE CAB	CREW CAB	NOTE
1	FRONT AXLE	CK3000100N1-001	1			3001010KY
2	STEERING RH	CK3000100N1-002	1			
3	LOWER TRAPEZIA SHAPED STEERING ARM	CK3000100N1-003	1			
4	TRANSVERSE LEVER RIGHT JOINT	CK3000100N1-004	1			
5	NUT	GB/T6170-2000	2			
6	SPRING WASHER	GB/T93-1987	2			
7	CLIP	CK3000100N1-005	2			
8	BOLT	GB/T5782-2000	2			
9	TRANSVERSE LEVER	CK3003141N1	1			
10	TRANSVERSE LEVER LEFT JOINT	CK3000100N1-006	1			
11	LOWER TRAPEZIA SHAPED STEERING ARM	CK3000100N1-007	1			
12	SEMI-CIRCLE KEY	GB/T1099.1-2003	3			
13	NUT	CK3000100N1-008	2			
14	COTTER PIN	GB/T91-2000	2			
15	THRUST BEARING	GB/T301-1995	2			
16	NUT	GB/T5786-2000	2			
17	NUT	GB/T6171-2000	4			
18	SPRING WASHER	GB/T93-1987	2			
19	STEERING ADJUSTING WASHER	CK3000100N1-009	A/R			
20	HOOK	CK3000100N1-010	2			
21	STEERING LH	CK3000100N1-011	1			
22	STERRING ARM	CK3000100N1-012	1			
23	GASKET	CK3000100N1-013	4			
24	STEERING PIN	CK3000100N1-014	2			
25	STEERING COVER PIN	Q72132	4			
26	COTTER PIN	GB/T91-2000	3			
27	NUT	CK3000100N1-015	1			
28	NUT	CK3000100N1-016	2			
29	CUP	GB1152-89	4			
30	COTTER PIN	GB/T91-2000	2			
31	WASHER	CK3000100N1-017	2			
32	RING	CK3000100N1-018	2			

FIGURE 37 FRONT AXLE & BRAKE

NO	DESCRIPTION	PART NO.	ALL	SINGLE CAB	CREW CAB	NOTE
33	NUT	CK3000100N1-019	2			
34	JOINT BOLT	CK3000100N1-020	8			
35	SPRING WASHER	GB/T93-1987	8			
36	NUT	GB/T6171-2000	16			
37	FRONT BRAKE ASM LH	CK3000100N1-021	1			
38	FRONT BRAKE ASM RH	CK3000100N1-022	1			
39	FRONT WHEEL HUB SEAL	CK3000100N1-023	2			
40	FRONT AXLE BEARING	GB/T297-94 (D)	2			
41	FRONT WHEEL HUB	CK3000100N1-024	2			
42	TAPERED ROLLER BEARING	GB/T297-94	2			
43	FRONT BRAKE DRUM	CK3000100N1-025	2			
44	SCREW	GB/T819-2000	6			
45	WHEEL COVER	CK3000100N1-026	2			
46	NUT L	CK3000100N1-027	6			
47	NUT R	CK300100N1-028	6			
48	BOLT L	CK3000100N1-029	6			
49	BOLT R	CK3000100N1-030	6			
50	FRONT WHEEL HUB LH	CK3000100N1-031	1			
51	FORNT WHEEL HUB RH	CK300100N1-032	1			
	FRONT BRAKE SHOE	3501300KY	4			
	REAR BRAKE SHOE	3501400KY	4			

FIGURE 38 TIRE & WHEEL

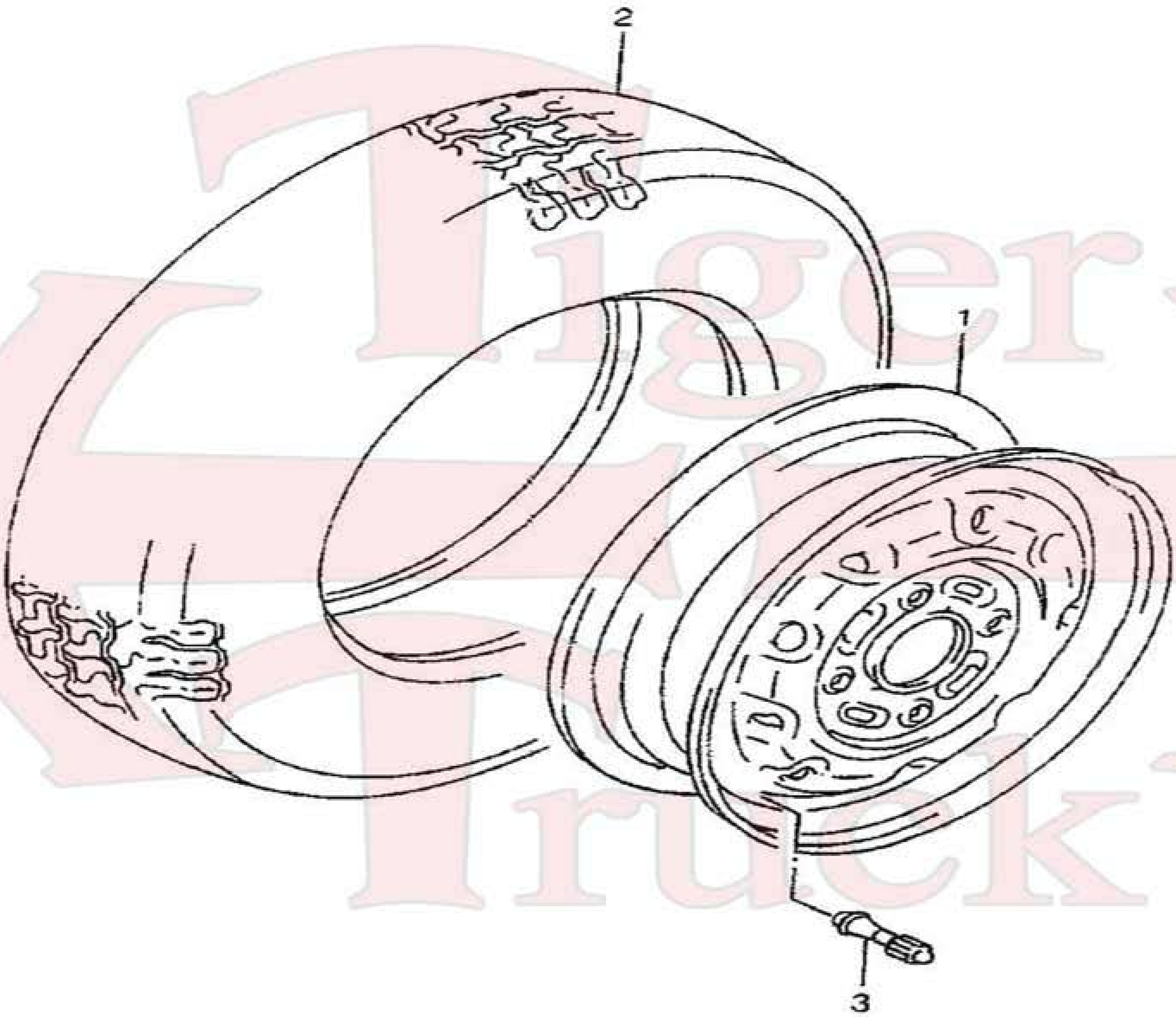

FIGURE 38 TIRE & WHEEL

NO	DESCRIPTION	PART NO.	ALL	SINGLE CAB	CREW CAB	NOTE
1	WHEEL	CK3101102N1	5			
2	TIRE	CK3106100N1	5			
3	VALVE STEM	CK3106200N1	5			
	TIRE & WHEEL ASM	CK3101102N1-1	A/R			

Tiger Truck

FIGURE 39 TIRE CARRIER

FIGURE 39 TIRE CARRIER

NO	DESCRIPTION	PART NO.	ALL	SINGLE CAB	CREW CAB	NOTE
1	SPARE TIRE CARRIER	CK3105100N1	1			
2	SPARE TIRE CARRIER CABLE	CK3105012N1	1			
3	SCREW	CK3105011N1	1			
4	NUT	GB/T6177.1-2000	1			
5	NUT	CK3105013N1	1			
6	WASHER	GB/T97.1-2002	2			
7	PIN SHAFT	GB/T882-1986	2			
8	COTTER PIN	GB/T91-2000	2			

Tiger Truck

FIGURE 40 STEERING WHEEL

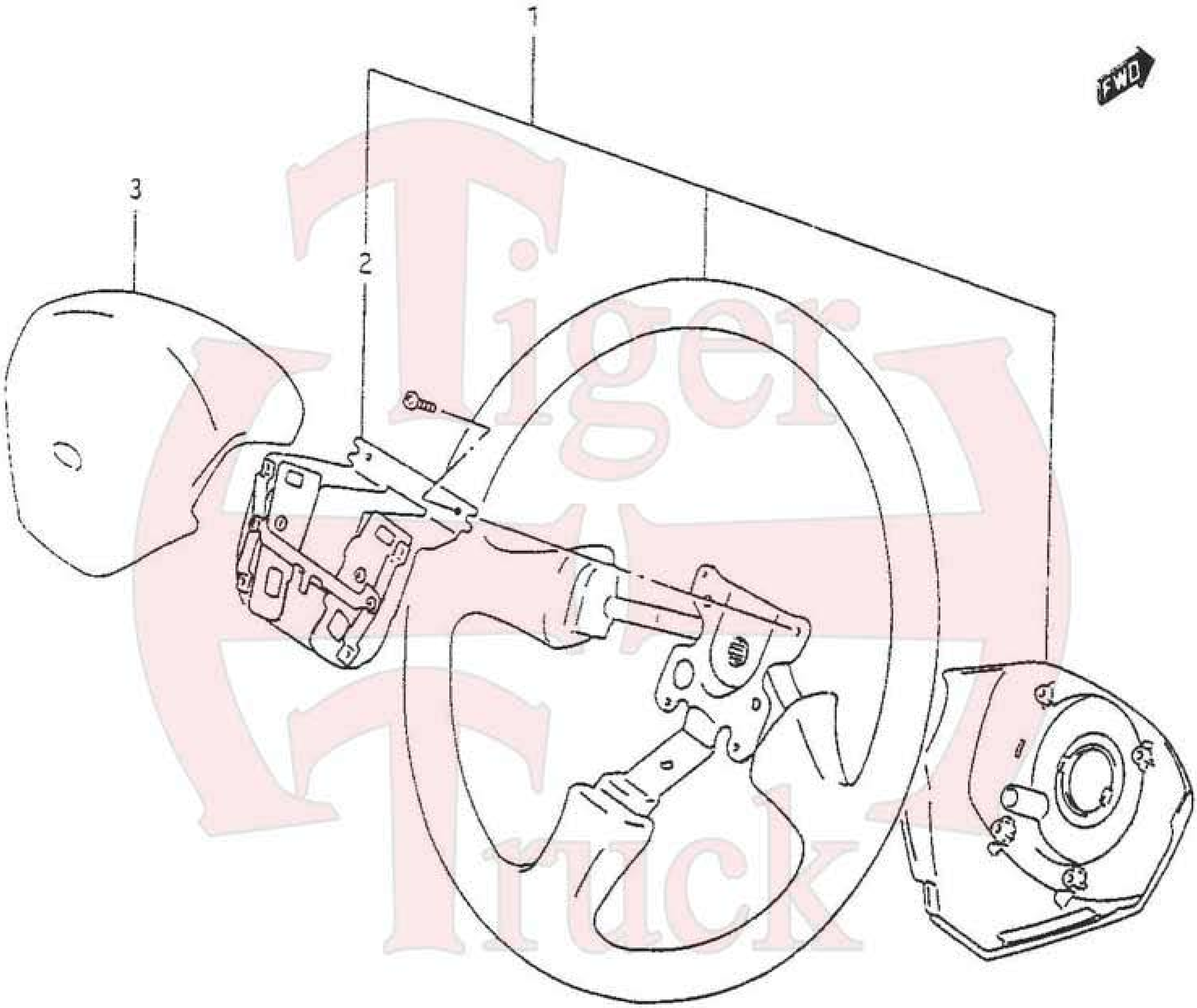

FIGURE 40 STEERING WHEEL

NO	DESCRIPTION	PART NO.	ALL	SINGLE CAB	CREW CAB	NOTE
1	STEERING WHEEL ASM	CK3402100N1	1			
2	HORN COMP	CK3402100N1-001	1			
3	STEERING WHEEL CENTER COVER	CK3402100N1-002	1			

Tiger Truck

FIGURE 41 STEERING SYSTEM

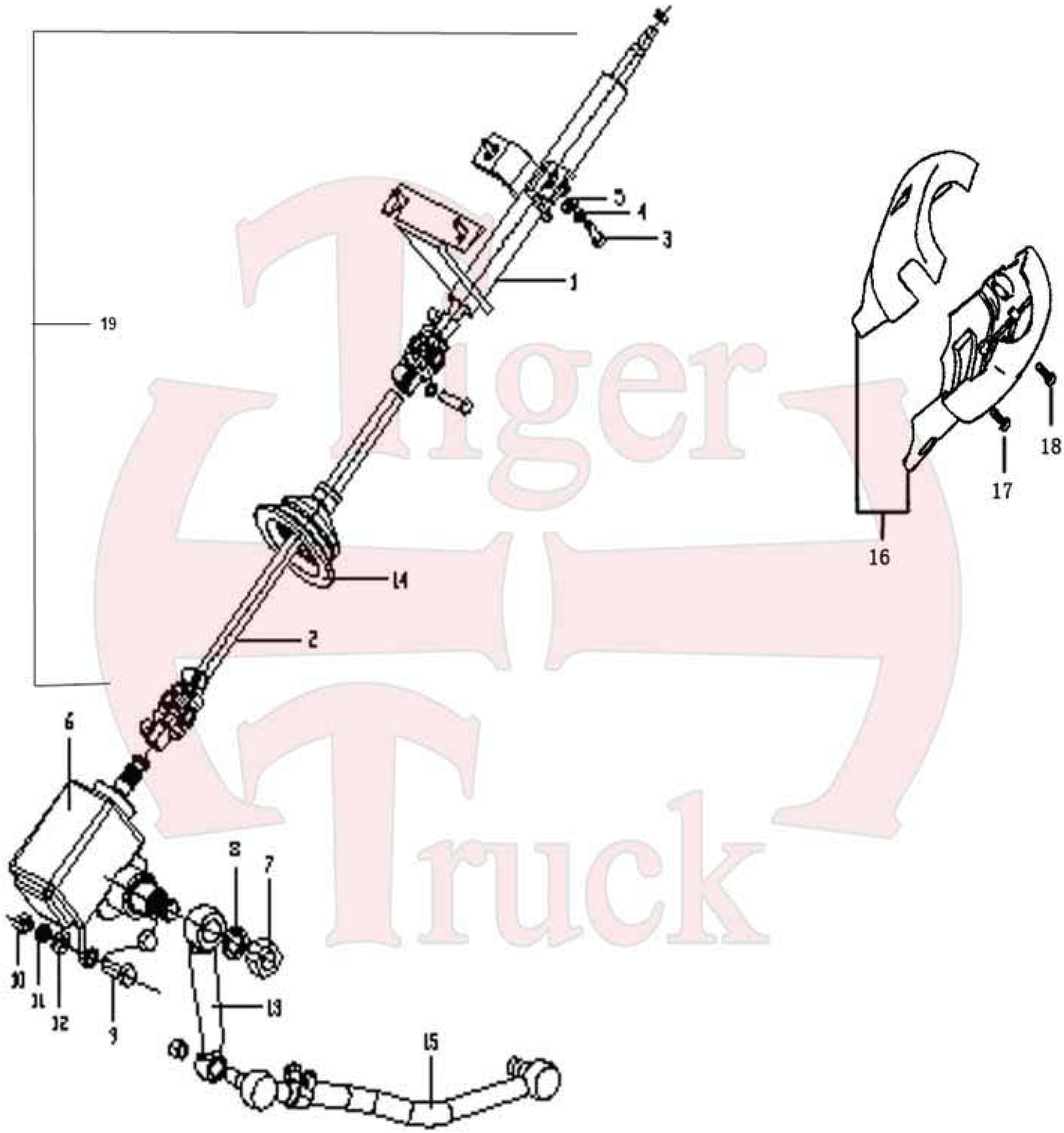

FIGURE 41 STEERING SYSTEM

NO	DESCRIPTION	PART NO.	ALL	SINGLE CAB	CREW CAB	NOTE
1	STEERING COLUMN ASM W/ UNIVERSAL JOINT	CK3404100N1	1			
2	STEERING LOWER SHAFT W/ UNIVERSAL JOINT	CK3404200N1	1			
3	BOLT	GB/T5783-2000	4			
4	WASHER	GB/T93-1987	4			
5	WASHER	GB/T96.1-2002	4			
6	STEERING GEAR BOX	CK3401100N1	1			
7	NUT	GB/T6170-2000	1			
8	WASHER	GB/T93-1987	1			
9	BOLT	GB/T5783-2000	3			
10	NUT	GB/T6170-2000	3			
11	WASHER	GB/T93-1987	3			
12	WASHER	GB/T97.1-2002	3			
13	STEERING ARM	CK3412011N1	1			
14	STEERING DUST CAP	CK3412012N1	1			
15	DRAG LINK ASM W/ BALL JOINT	CK3003200N1	1			
16	STEERING COLUMN COVER	CK3700230N1	1			
17	SCREW	GB/T818-2000	1			
18	SCREW	GB/T845-1985	2			
19	STEERING COLUMN ASM	CK3404100N1-A	1			

FIGURE 42 PEDAL & PEDAL BRACKET

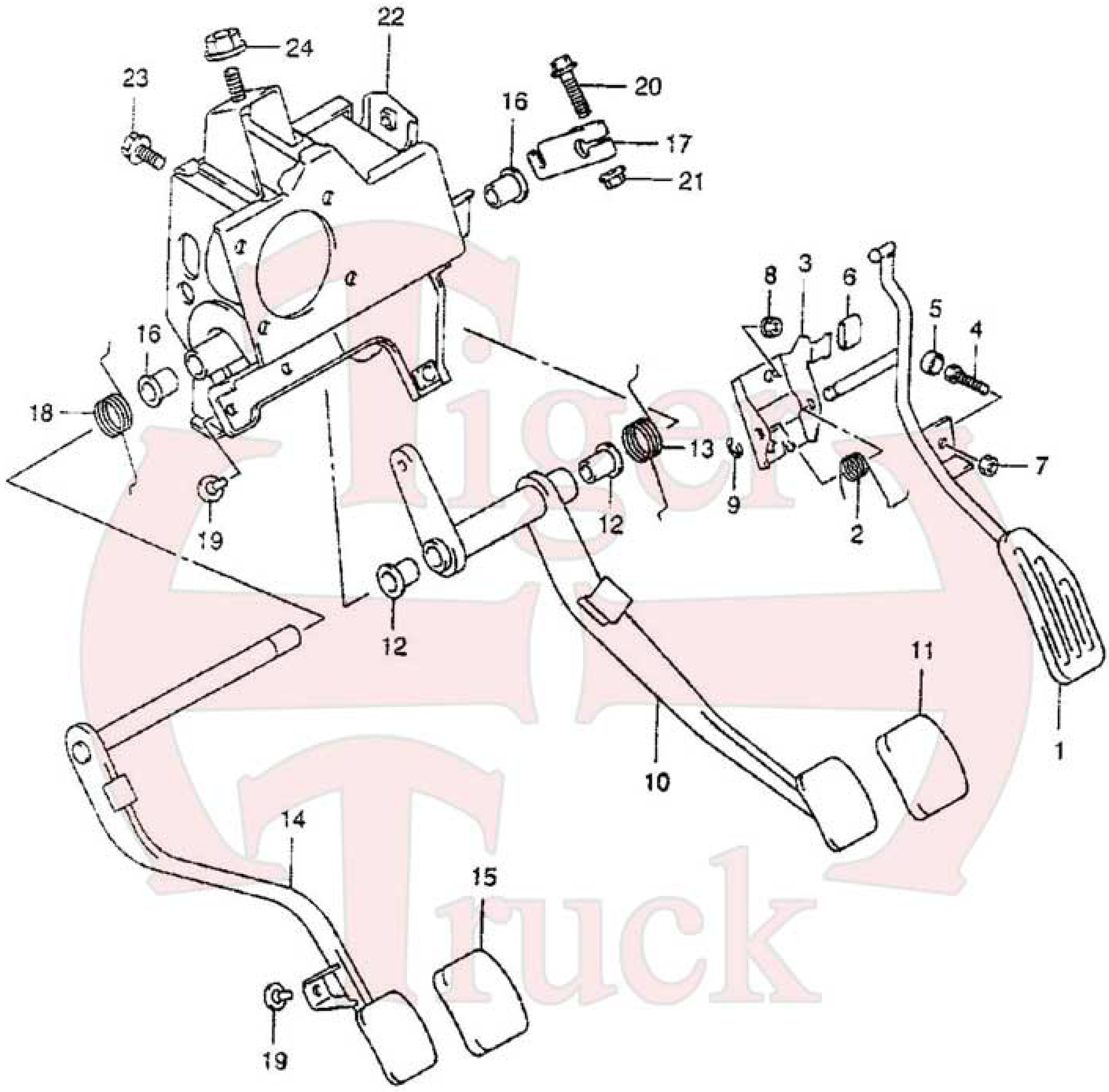

FIGURE 42 PEDAL & PEDAL BRACKET

NO	DESCRIPTION	PART NO.	ALL	SINGLE CAB	CREW CAB	NOTE
1	ACCELERATOR PEDAL	CK1108100N1	1			
2	SPRING	CK1108100N1-001	1			
3	ACCELERATOR PEDAL BRACKET	CK1108100N1-002	1			
4	BOLT	CK1108100N1-003	1			
5	DUST CAP	CK1108100N1-004	1			
6	WASHER	CK1108100N1-005	1			
7	NUT	CK1108100N1-006	1			
8	NUT	CK1108100N1-007	2			
9	E RING	CK1108100N1-008	1			
10	BRAKE PEDAL	CK3504120N1	1			
11	PEDAL PAD	3504046-01	1			
12	GASKET	CK1108100N1-010	1			
13	RETURN SPRING	CK3504101N1	1			
14	CLUTCH PEDAL	CK3504130N1	1			
15	PEDAL PAD	3504046-01	1			
16	GASKET	CK1108100N1-010	1			
17	SHAFT ARM	CK1108100N1-013	1			
18	CLUTCH RETURN SPRING	CK3504101N1	1			
19	WASHER	CK1108100N1-014	2			
20	BOLT	CK1108100N1-015	1			
21	NUT	CK1108100N1-016	1			
22	PEDAL BRACKET	CK1108100N1-017	1			
23	BOLT	CK1108100N1-018	1			
24	NUT	CK1108100N1-019	3			
25	BRAKE PEDAL STIFFENING PLATE	CK1108100N1-020	1			

FIGURE 43 MASTER CYLINDER

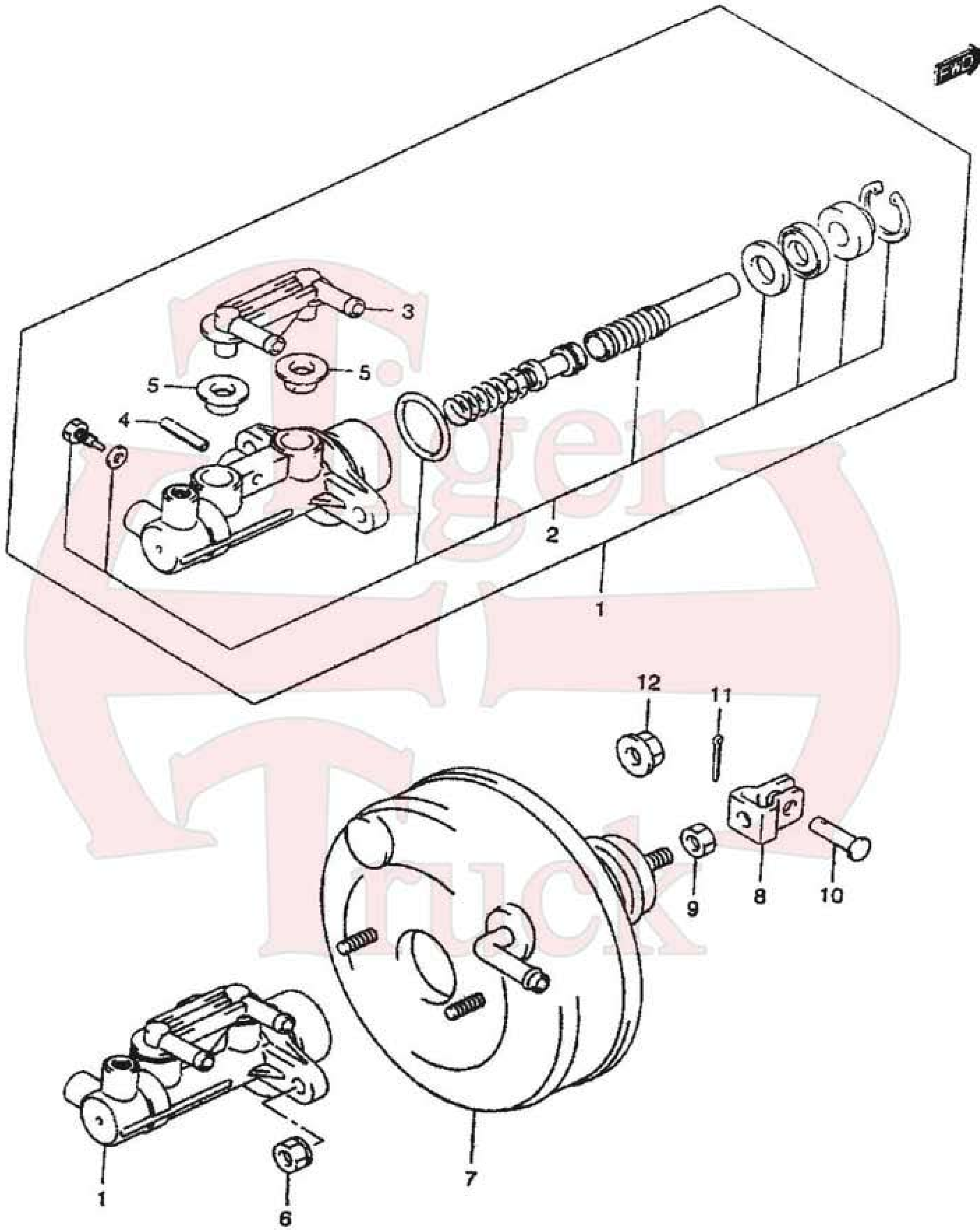

FIGURE 43 MASTER CYLINDER

NO	DESCRIPTION	PART NO.	ALL	SINGLE CAB	CREW CAB	NOTE
	MASTER CYLINDER W/ BOOSTER	CK3505 100N1	1			3505110-01
1	MASTER CYLINDER	CK3505100N1-001	1			51100-77A00
2	MASTER CYLINDER PISTON	CK3505100N1-002	1			51100-60810
3	PIPE JOINT	CK3505100N1-003	1			51191-77A00
4	PIN	CK3505100N1-004	1			09205-05016
5	RUBBER PAD	CK3505100B1-005	1			51197-855520
6	NUT	GB/T6170-2000	1			
7	BRAKE BOOSTER	CK3505100N1-006	1			51300-77A00
8	U CLAMP	CK3505100N1-007	1			
9	NUT	GB/T6170-2000	1			
10	PIN SHAFT	GB/T882-1986	1			
11	COTTER PIN	GB/T91-2000	1			
12	NUT	CK3505100N1-008	1			

FIGURE 44 BRAKE RESERVIOR

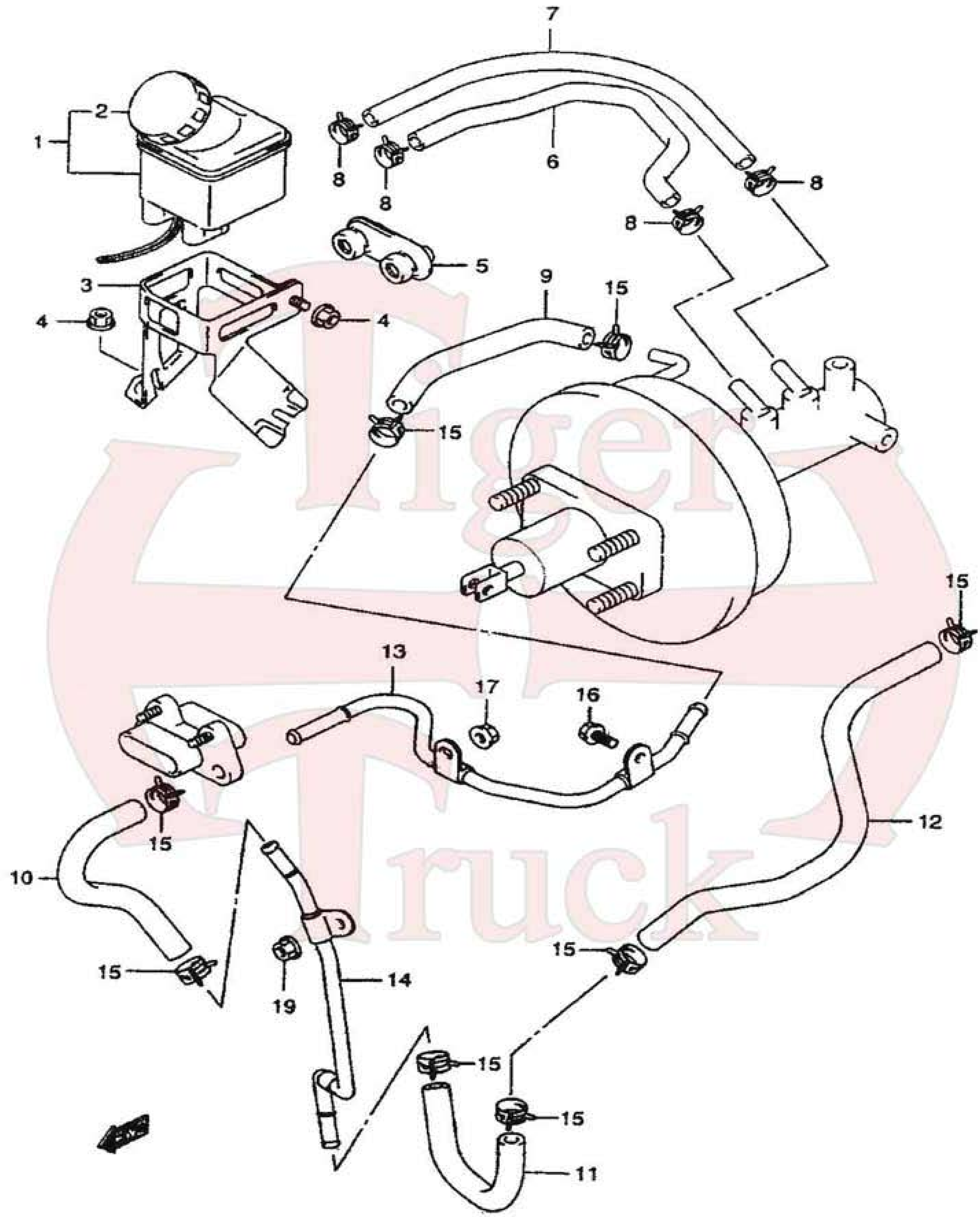

FIGURE 44 BRAKE RESERVIOR

NO	DESCRIPTION	PART NO.	ALL	SINGLE CAB	CREW CAB	NOTE
1	MASTER CYLINDER RESERVIOR	CK3505202N1	1			3505150-01
2	RESERVIOR CAP					
3	RESERVIOR BRACKET	CK3505204N1	1			
4	NUT	GB/T41-2000	1			
5	RESERVIOR HOSE GROMMET	CK3505201N1	1			
6	FRONT BRAKE RESERVIOR HOSE	CK3505205N1	1			
7	REAR BRAKE RESERVIOR HOSE	CK3505206N1	1			
8	CLAMP	09402-16501	4			
9	VACUUM HOSE NO.1	CK3510-121N1	1			
10	VACUUM HOSE NO.2	CK3510221N1	1			
11	VACUUM HOSE NO.3	CK3510222N1	1			
12	VACUUM HOSE NO.4	CK3510300N1	1			
13	VACUUM PIPE NO.1	CK3510110N1	1			
14	VACUUM BRAKE PIPE NO.2	CK3510210N1	1			
15	CLAMP	09401-15401	1			
16	BOLT	GB/T5781-2000	1			
17	NUT	GB/T41-2000	3			

Truck Parts

FIGURE 45 BRAKE PIPE

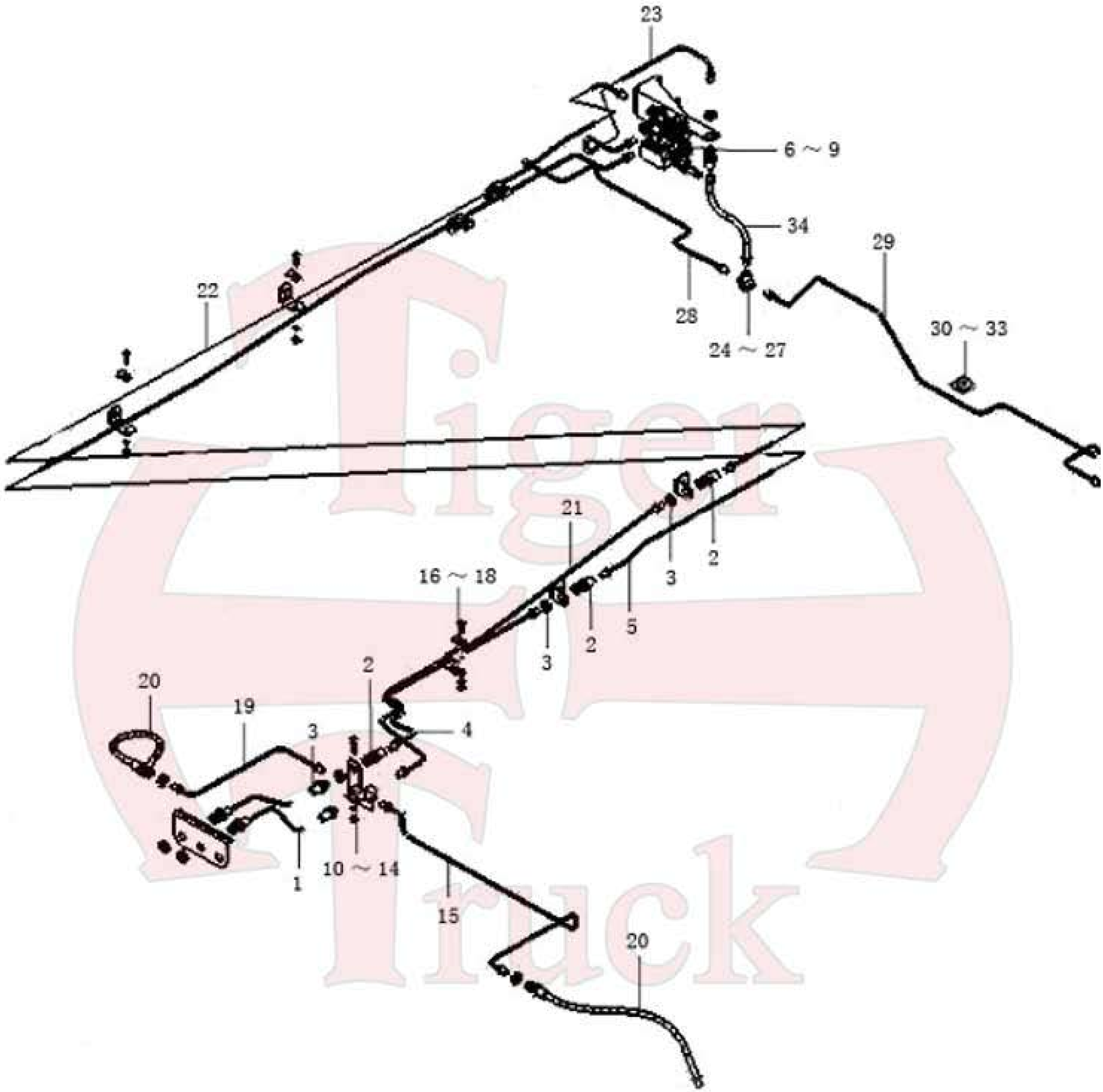

FIGURE 45 BRAKE PIPE

NO	DESCRIPTION	PART NO.	ALL	SINGLE CAB	CREW CAB	NOTE
1	CONNECTION HOSE ASM	CK3506330N1	2			
2	STRAIGHT JOINT	CK3506012F1	2			
3	NUT	GB/T6173-2000	2			
4	REAR BRAKE FRONT OIL PIPE	CK3506340N1	1			
5	REAR BRAKE MIDDLE OIL PIPE	CK3506350N1	1			
6	PROPORTIONING VALVE	CK3523100N1	1			
7	BOLT	GB/T5783-2000	2			
8	WASHER	GB/T97.1-2002	2			
9	WASHER	GB/T93-1987	2			
10	FOUR-WAY VALVE	CK3506012N1	1			
11	BOLT	GB/T5781-2000	1			
12	NUT	GB/T41-2000	1			
13	WASHER	GB/T97.1-2002	1			
14	WASHER	GB/T93-1987	1			
15	FRONT BRAKE OIL PIPE LH	CK3506230N1	1			
16	CLIP	09403-06302	1			
17	SCREW	GB/T818-2000	1			
18	NUT	GB/T41-2000	1			
19	FRONT BRAKE OIL PIPE RH	CK3506240N1	1			
20	FRONT BRAKE LINE FLEX HOSE	CK3506250N1	2			
21	FRONT BRAKE FRONT OIL PIPE	CK3506260N1	1			
22	FRONT BRAKE REAR OIL PIPE	CK3506270N1	1			
23	REAR BRAKE REAR OIL PIPE	CK3506360N1	1			
24	THREE-WAY VALVE	CK3506011F1	1			
25	NUT	GB/T5781-2000	1			
26	WASHER	GB/T97.1-2002	1			
27	WASHER	GB/T93-1987	1			
28	REAR BRAKE OIL PIPE RH	CK3506380N	1			
29	REAR BRAKE OIL PIPE LH	CK3506390N1	1			
30	CLIP	CK3500011N1	1			
31	BOLT	GB/T5781-2000	1			
32	WASHER	GB/T97.1-2002	1			
33	WASHER	GB/T93-1987	1			
34	HOSE CONNECTOR	CK3506370N1	1			

FIGURE 46 PARKING BRAKE & CABLE

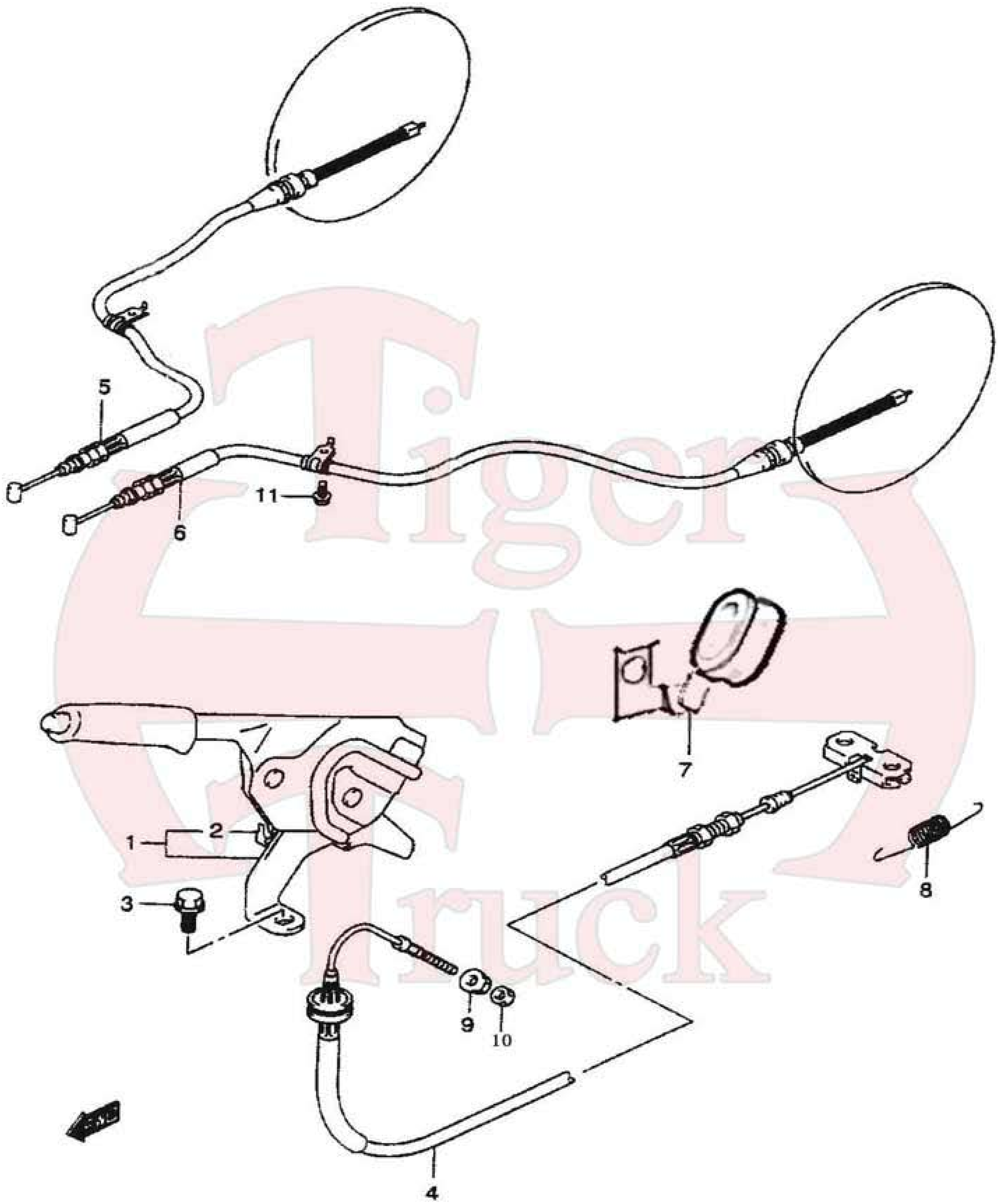

FIGURE 46 PARKING BRAKE & CABLE

NO	DESCRIPTION	PART NO.	ALL	SINGLE CAB	CREW CAB	NOTE
1	PARKING BRAKE HANDLE	CK3508100N1	1			54100-77A00-5PK
2	PARKING BRAKE LIGHT SWITCH	CK3700280N1	1			37940-60A100
3	BOLT	GB/T5781-2000	2			
4	PARKING BRAKE CABLE NO.1	CK3508210N1	1			
5	PARKING BRAKE CABLE NO.2 RH	CK3508220N1	1			
6	PARKING BRAKE CABLE NO.3 LH	CK3508230N1	1			
7	CABLE CLAMP	CK3508102N1	2			
8	RETURN SPRING	CK3508101N1	1			
9	NUT	GB/T41-2000	1			
10	NUT	GB/T41-2000	1			
11	BOLT	GB/T5781-2000	2			

Tiger Truck

FIGURE 47 BATTERY

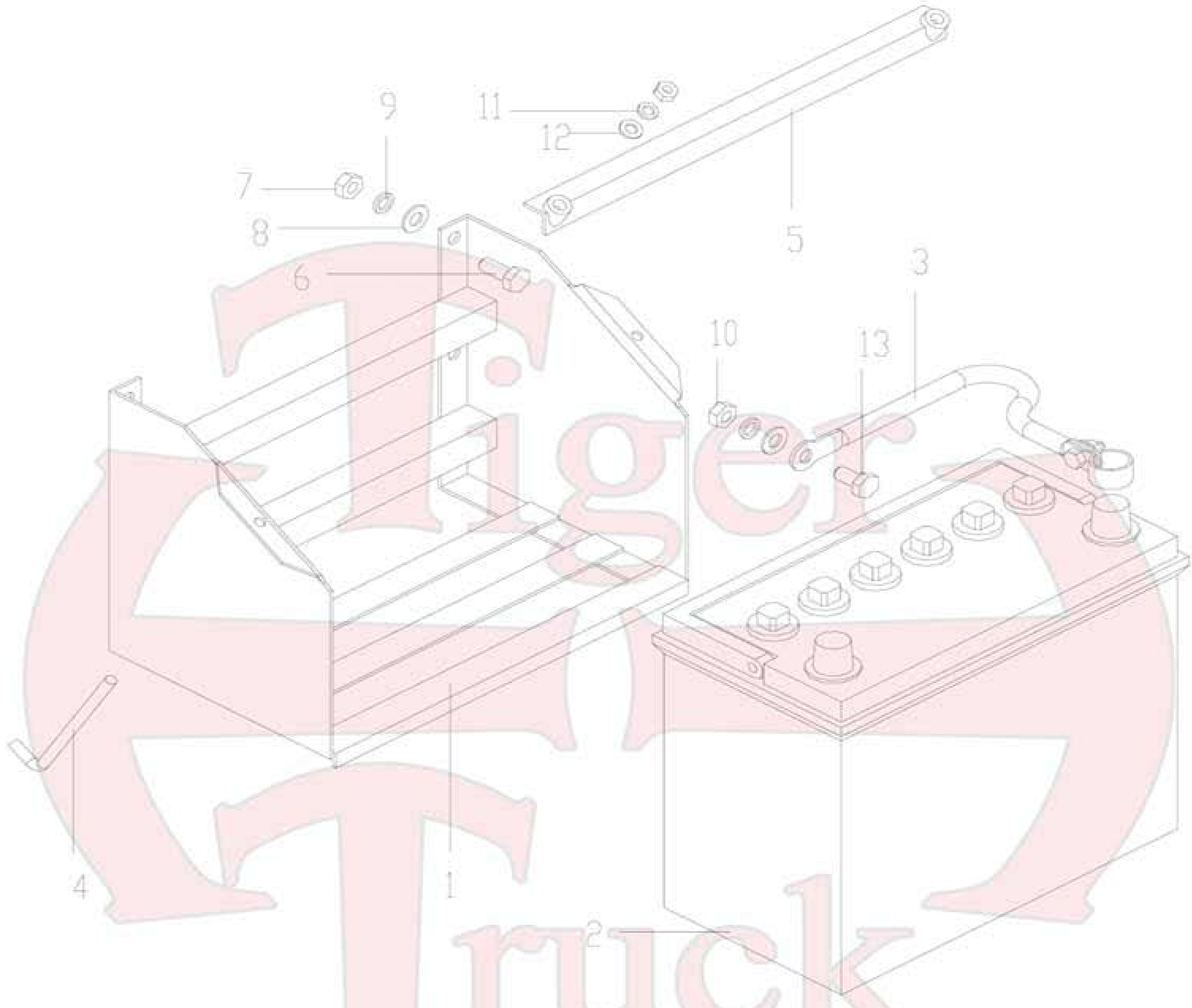

FIGURE 47 BATTERY

NO	DESCRIPTION	PART NO.	ALL	SINGLE CAB	CREW CAB	NOTE
1	BATTERY BRACKET ASM	CK3700700N1	1			
2	BATTERY	CK370680N1	1			
3	BATTERY GROUND WIRE	CK3700150N1	1			
4	BATTERY LEVER	CK3700706N1	2			
5	BATTERY HOLD DOWN	CK3700711N1	1			
6	BOLT	GB/T5783-2000	4			
7	NUT	GB/T6170-2000	4			
8	WASHER	GB/T97.1-2002	4			
9	WASHER	GB/T93-1987	4			
10	NUT	GB/T6170-2000	2			
11	WASHER	GB/T97.1-2002	3			
12	WASHER	GB/T93-1987	3			
13	BOLT	GB/T5781-2000	1			

Tiger Truck

FIGURE 48 SPEEDOMETER & Halifax

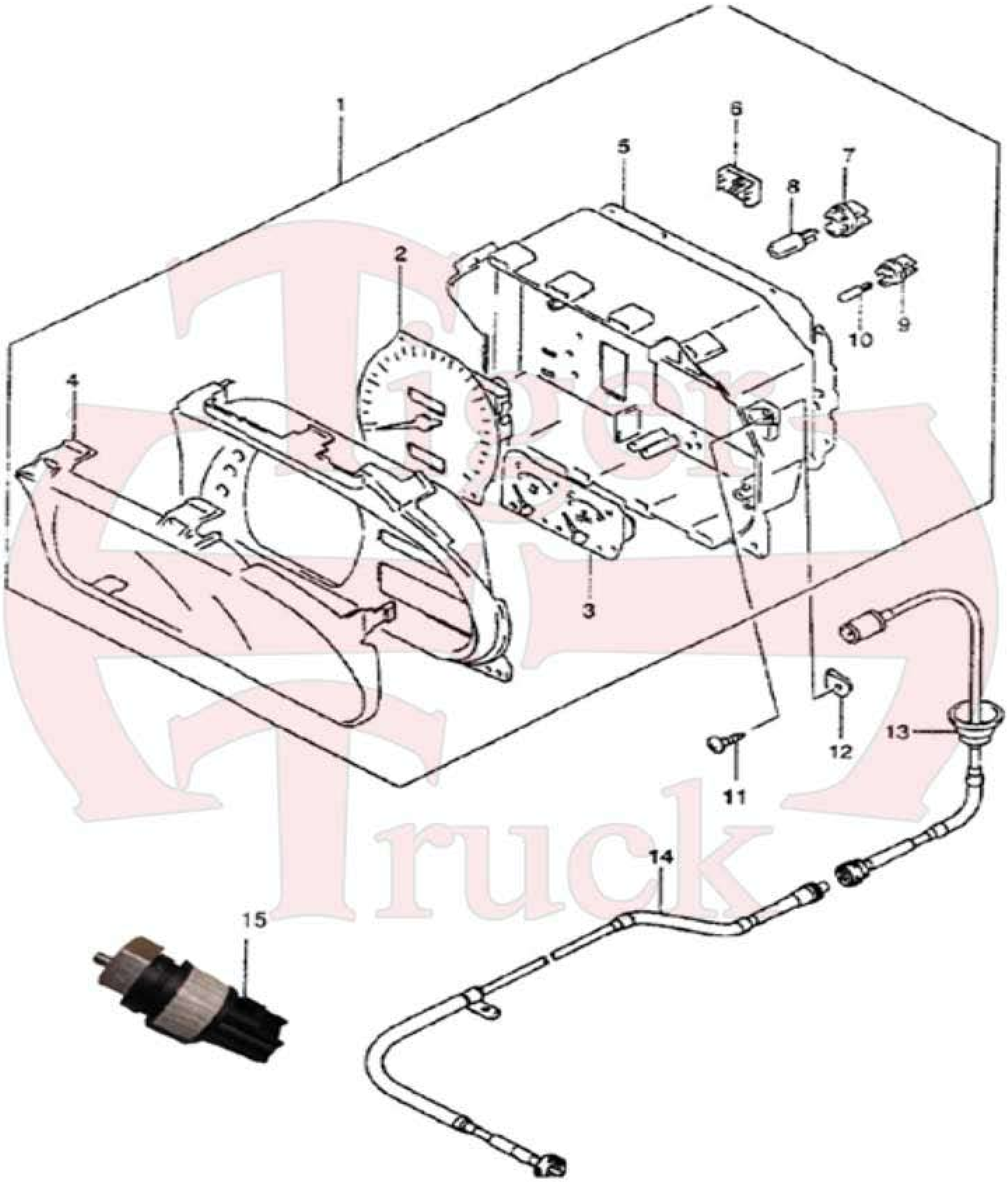

FIGURE 48 SPEEDOMETER & Halifax

NO	DESCRIPTION	PART NO.	ALL	SINGLE CAB	CREW CAB	NOTE
1	SPEEDOMETER	CK3820100N1	1			
		CK3820100ND	1			LOW SPEED
13	SPEEDOMETER CABLE NO.1	CK3700371N1	1			
14	SPEEDOMETER CABLE NO.2	CK3700372N1	1			
15	HALIFAX SENSOR	CK3820110ND				LOW SPEED

Tiger Truck

FIGURE 49 HEAD LAMP & TURN SIGNAL

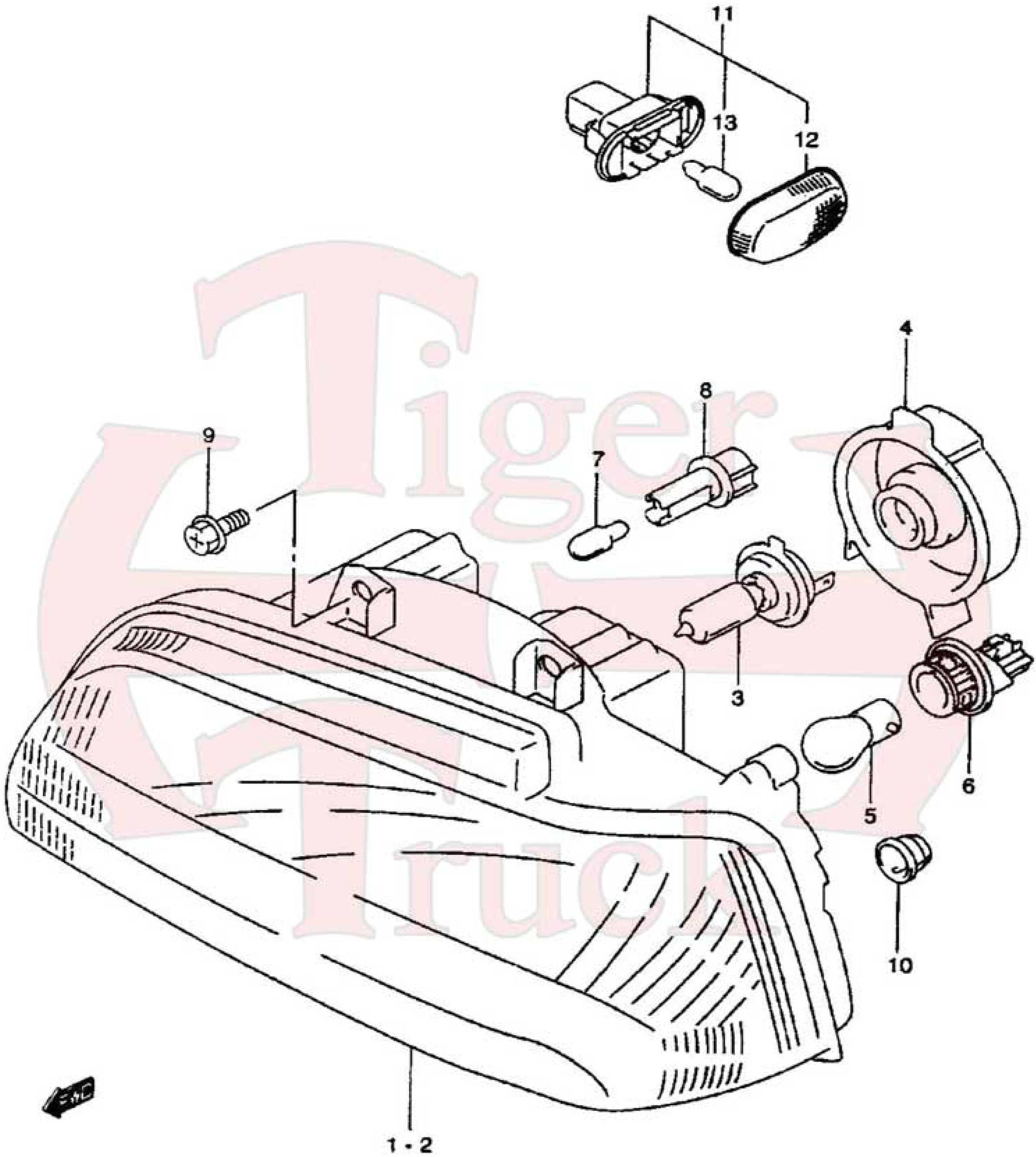

FIGURE 49 HEAD LAMP & TURN SIGNAL

NO	DESCRIPTION	PART NO.	ALL	SINGLE CAB	CREW CAB	NOTE
1	HEAD LAMP RH	CK3700620N1	1			3772020-01
2	HEAD LAMP LH	CK3700610N1	1			3772010-01
3	HEAD LAMP BULB	Y032-030	2			
4	CAP	3772015-01	2			
5	TURN LAMP BULB	Y032-050	2			
6	BULB SOCKET DIRECTIONAL	CK3700610N1-004	2			
7	LAMP BULB	Y032-070	2			
8	BULB SOCKET	3772070-01	2			
11	SIDE DIRECTIONAL INDICATOR LAMP	CK3700670N1-001	1			3726010-01

Tiger Truck

FIGURE 50 FRONT FOG LAMP

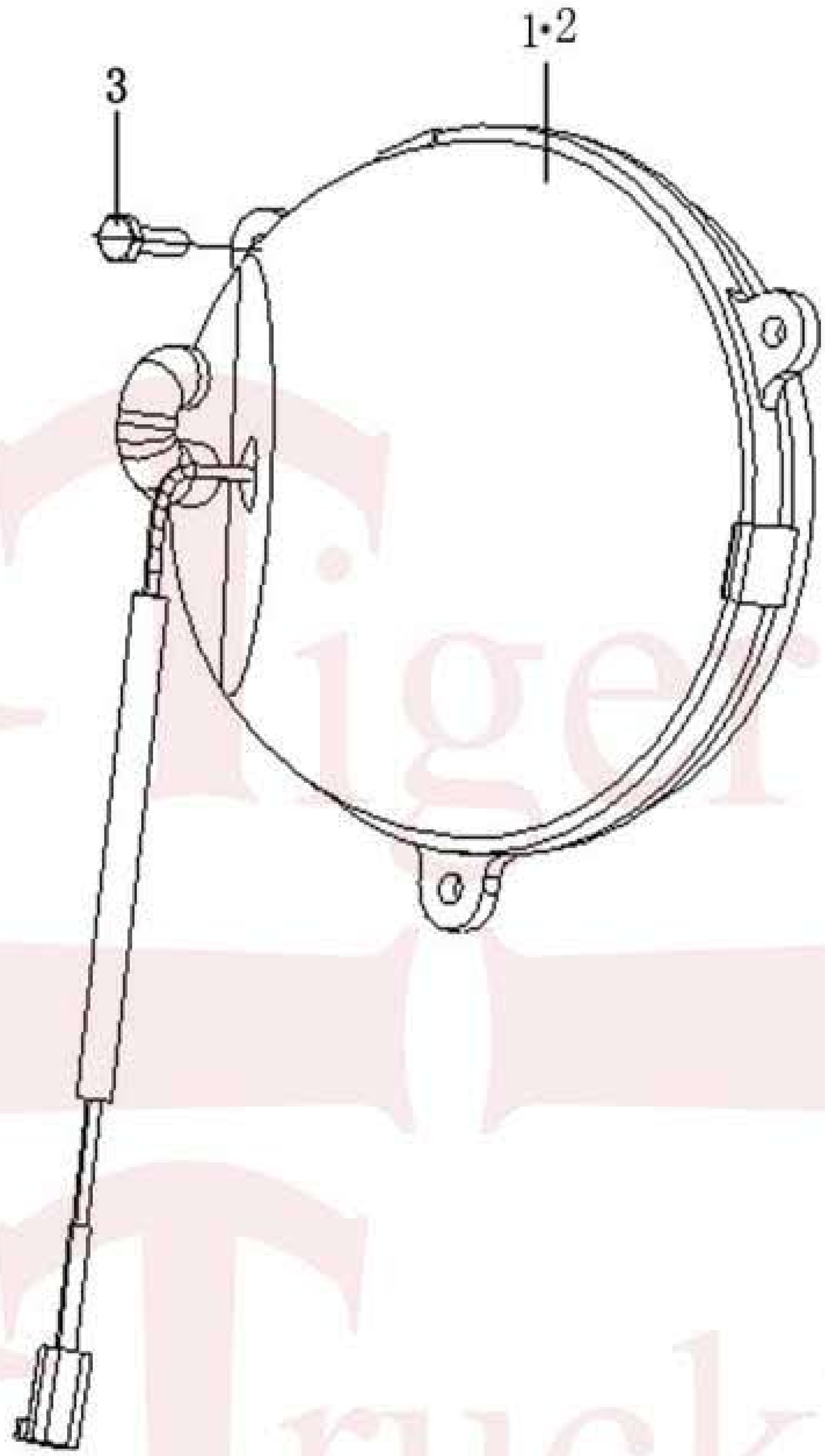

FIGURE 50 FRONT FOG LAMP

NO	DESCRIPTION	PART NO.	ALL	SINGLE CAB	CREW CAB	NOTE
1	FRONT FOG LAMP LH	CK3700630N1	1			
2	FRONT FOG LAMP RH	CK3700640N1	1			
3	SCREW	GB/T823-1988	6			

Tiger Truck

FIGURE 51 REAR TAIL LAMP & LICENSE PLATE LAMP

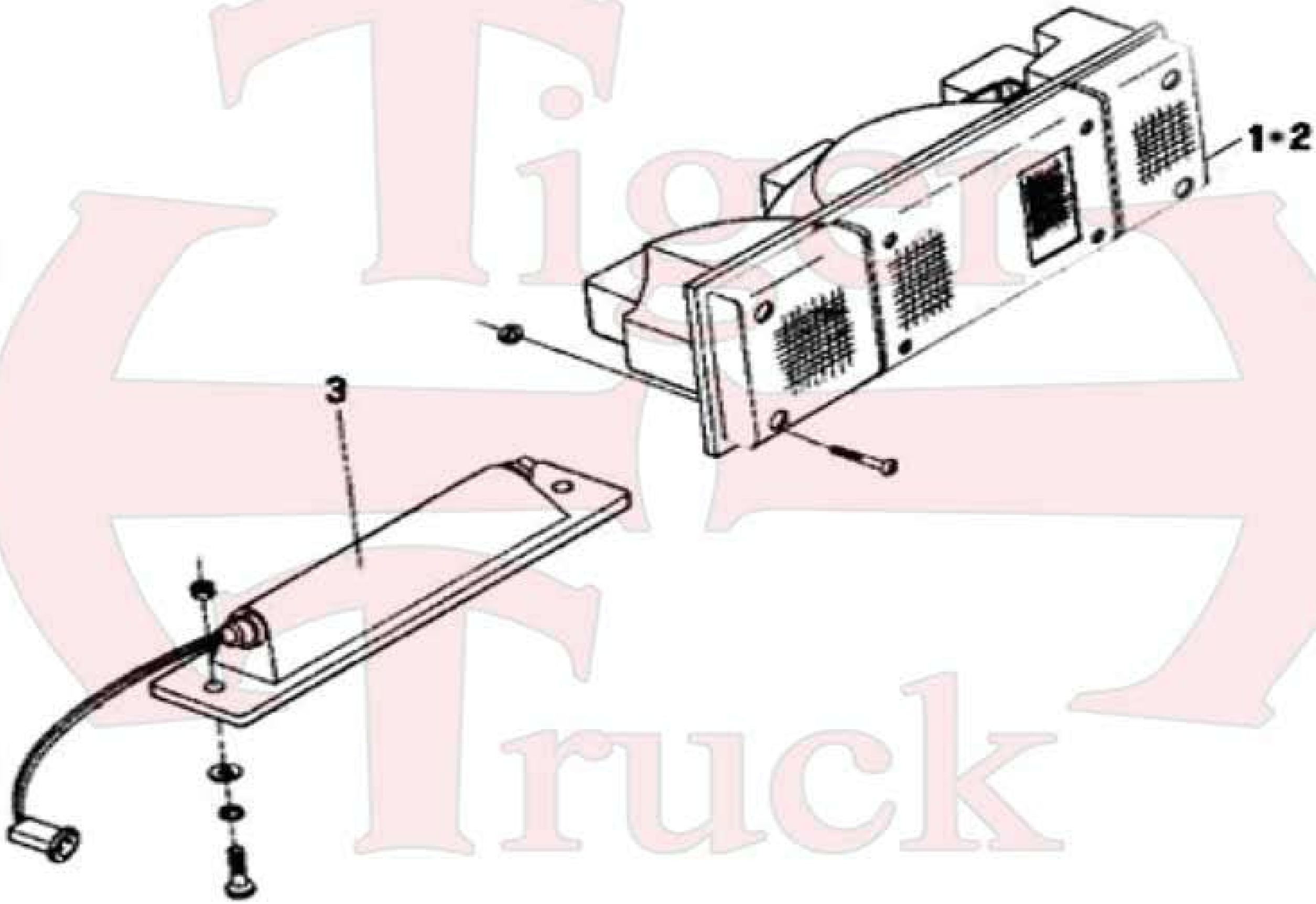

FIGURE 51 REAR TAIL LAMP & LICENSE PLATE LAMP

NO	DESCRIPTION	PART NO.	ALL	SINGLE CAB	CREW CAB	NOTE
1	REAR TAIL LAMP LH	CK3700650N1	1			
2	REAR TAIL LAMP RH	CK3700660N1	1			
	NUT	GB/T41-2000	4			
	WASHER	GB/T97.1-2002	4			
	WASHER	GB/T93-1987	4			
3	LICENSE PLATE LAMP	CK3700140C1	1			
	SCREW	GB/T818-2000	2			

Tiger Truck

FIGURE 52 BODY WIRING HARNESS

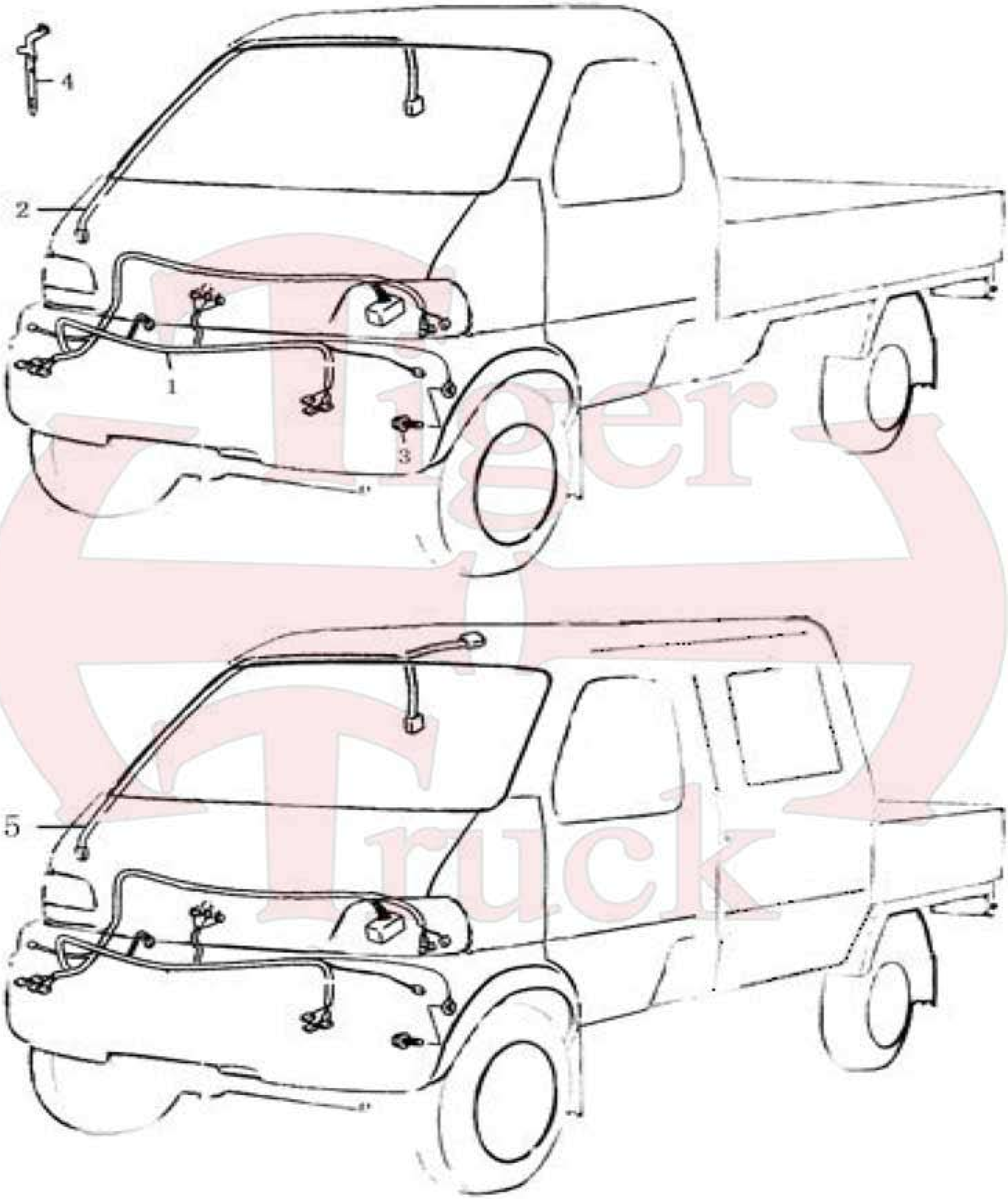

FIGURE 52 BODY WIRING HARNESS

NO	DESCRIPTION	PART NO.	ALL	SINGLE CAB	CREW CAB	NOTE
1	BODY WIRING HARNESS	CK4002100N1		1		
		CK4002100ND	1			LOW SPEED
2	ROOF HARNESS	CK4002300N1		1		
3	BOLT	GB/T5781-2000	2			
4	CLIP	CK3700111N1	20			
5	ROOF WIRING HARNESS	CK4002300N3			1	

Tiger Truck

FIGURE 53 CHASIS WIRING HARNESS

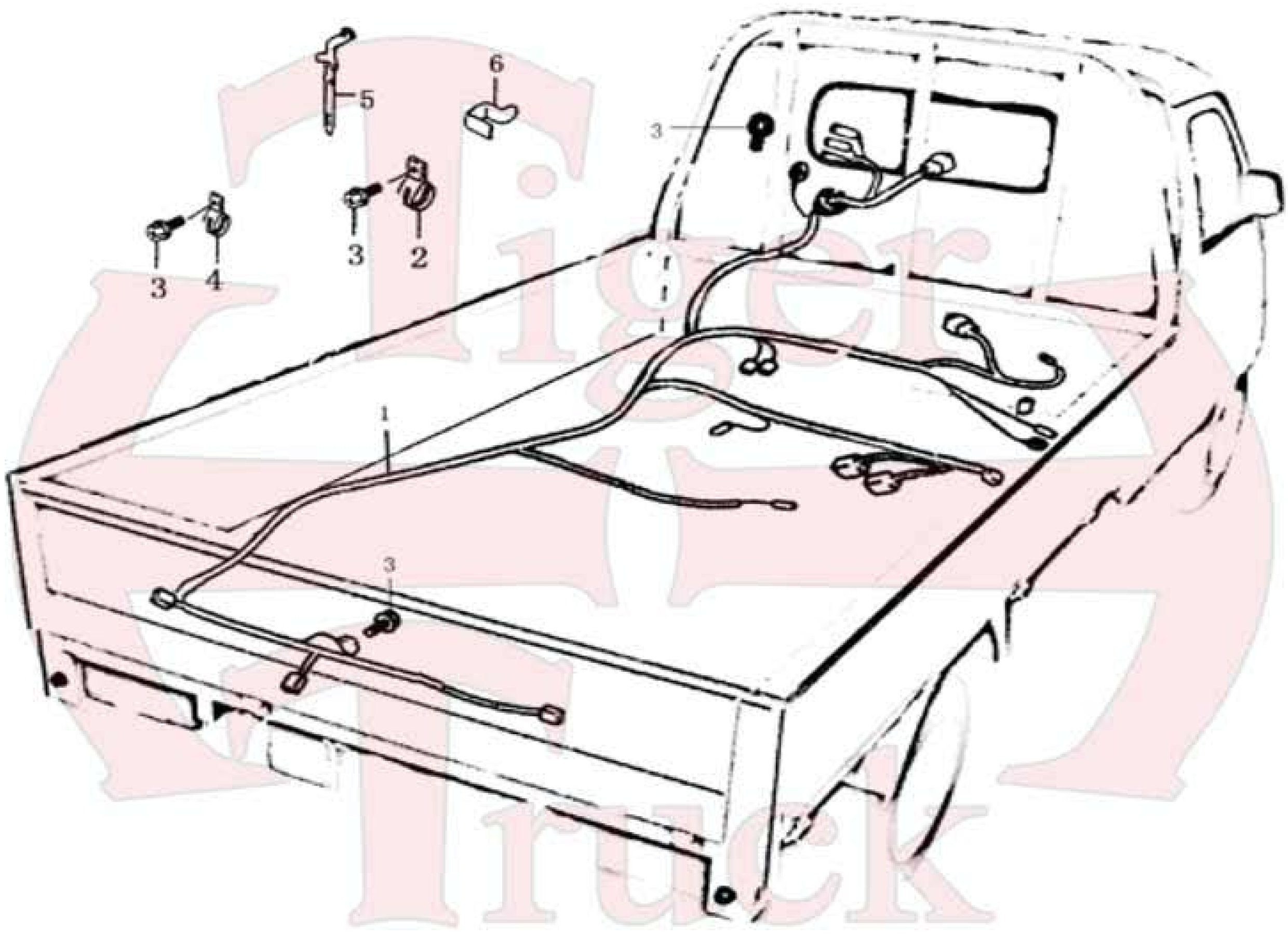

FIGURE 53 CHASIS WIRING HARNESS

NO	DESCRIPTION	PART NO.	ALL	SINGLE CAB	CREW CAB	NOTE
1	CHASIS WIRING HARNESS	CK4010200N1	1			
		CK4010200ND	1			LOW SPEED
2	CLIP	CK3700123N1	1			
3	BOLT	GB/T5781-200	3			
4	CLIP	CK3700124N1	1			
5	CLIP	CK3700121N1	20			
6	CLIP	CK3700122N1	6			

Tiger Truck

FIGURE 54 COMBINATION SWITCH & ELECTRICAL CONTROLS

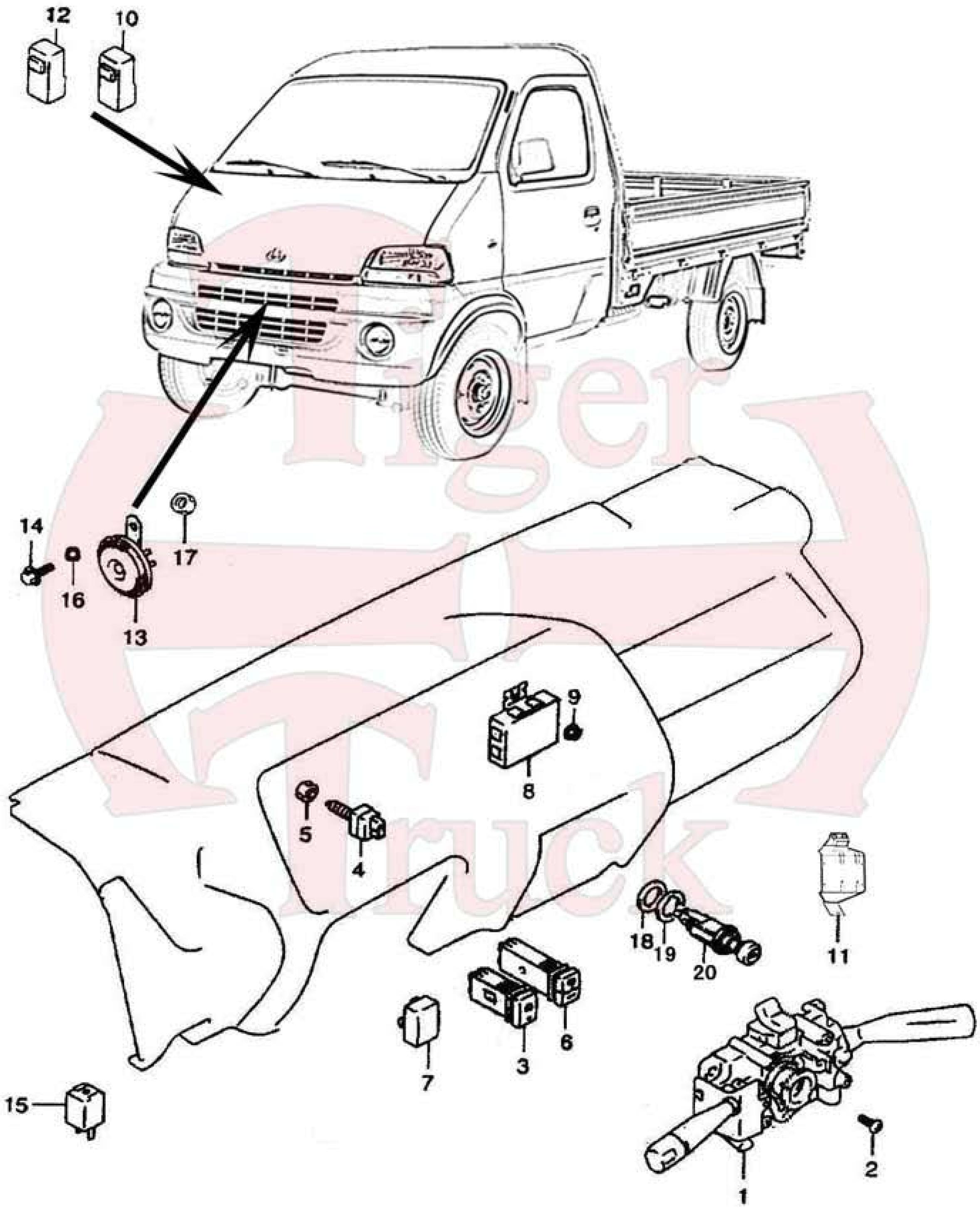

FIGURE 54 COMBINATION SWITCH & ELECTRICAL CONTROLS

NO	DESCRIPTION	PART NO.	ALL	SINGLE CAB	CREW CAB	NOTE
1	COMBINATION SWITCH	CK3700210N1	1			37400-77A00
2	SCREW	GB/T818-2000	3			
3	FRONT FOG LIGHT SWITCH	CK3700240N1	1			3779010-01
4	REAR FOG LIGHT SWITCH	CK3700250N1	1			3776010-01
5	BRAKE LIGHT SWITCH	CK3700270N1	1			
6	NUT	GB/T41-2000	1			
7	SWITCH COVER	CK3700251N1	1			
8	ECU	CK3700580N1	1			
	ECU	3600010A13				SLOW SPEED
9	BOLT	GB/T5781-200	7			
10	RELAY	CK3700330N1	1			
11	ECU BRACKET	CK3700590N1	1			
12	RELAY	CK37003300N1	1			
13	HORN	CK3700420N1	1			3721010-01
14	BOLT	GB/T5783-2000	1			
15	FLASHER RELAY	CK3700350N1	1			
16	WASHER	GB/T97.1-2002	1			
17	NUT	GB/T41-2000	1			
18	WASHER	09160-23007	1			
19	RING	39471-84000	1			
20	LIGHTER	CK3700410N1	1			

FIGURE 55 IGNITION SWITCH & DOOR LOCKS

FIGURE 55 IGNITION SWITCH & DOOR LOCKS

NO	DESCRIPTION	PART NO.	ALL	SINGLE CAB	CREW CAB	NOTE
1	IGNITION SWITHC W/ 3 LOCKS					
2	IGNITION SWITCH	CK3700220N1	1			37104-52830
3	BOLT	CK3700221N1	2			
4	FRONT DOOR LOCK LH	CK6105100N1		1		82201-60860
5	FRONT DOOR LOCK RH	CK6105200N1		1		82201-60850
6	GAS CAP W/LOCK	CK1101300N1	1			

Tiger Truck

FIGURE 56 RADIO & ANTENNA

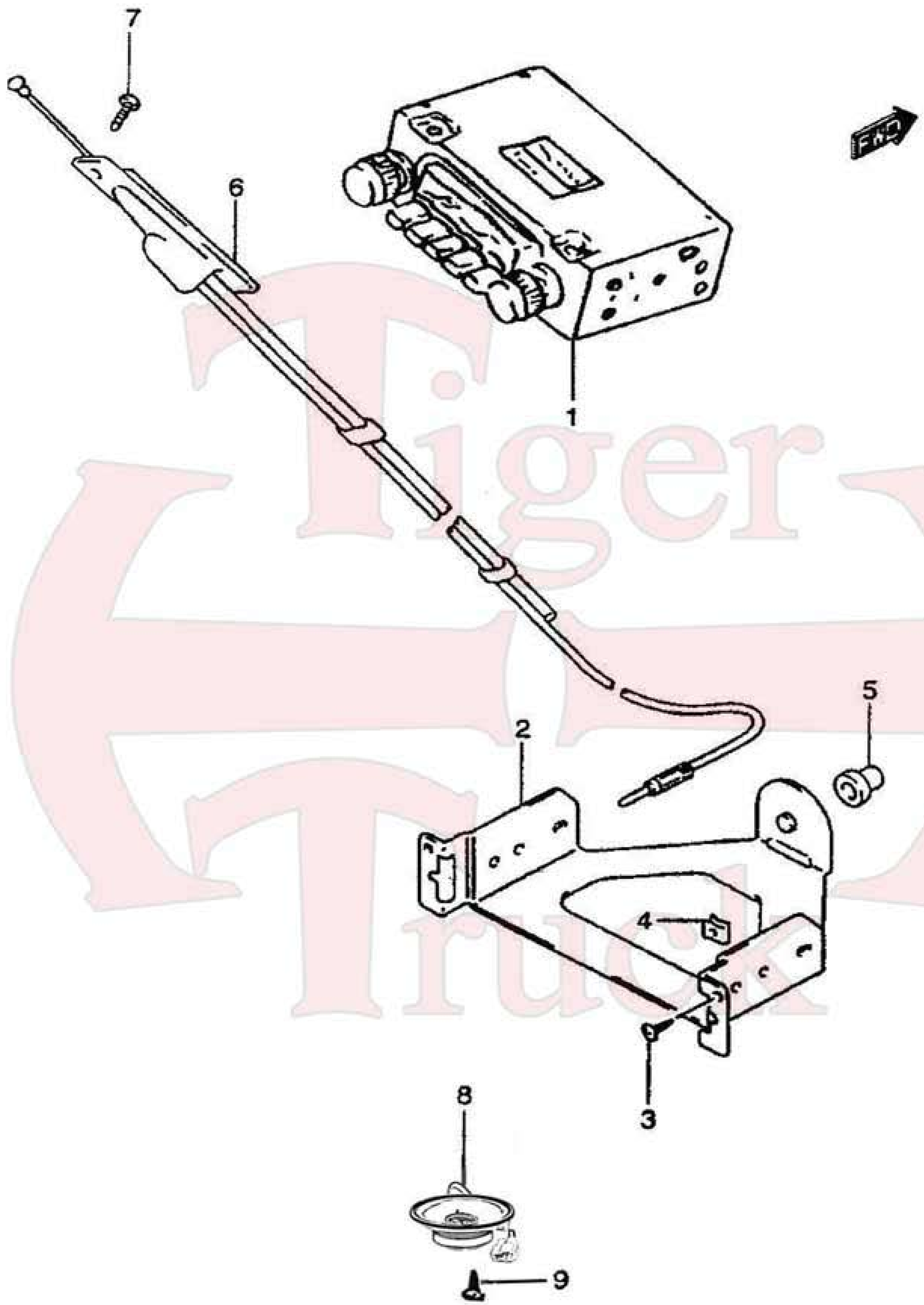

FIGURE 56 RADIO & ANTENNA

NO	DESCRIPTION	PART NO.	ALL	SINGLE CAB	CREW CAB	NOTE
1	CK3700400N1	RADIO	1			
2	BRACKET	CK3700400N1-001	1			
3	SCREW	Q-GB/T845-1985	2			
4	NUT	CK3700400N1-002	2			09148-05004
5	GASKET	CK3700400N1-003	1			
6	ANTENNA	CK3700401N1	1			
7	SCREW	Q-GB/T845-1985	2			
8	SPEAKER	CK3700402N1	2			
9	SCREW	Q-GB/T845-1985	2			

Tiger Truck

FIGURE 57 TOOL KIT

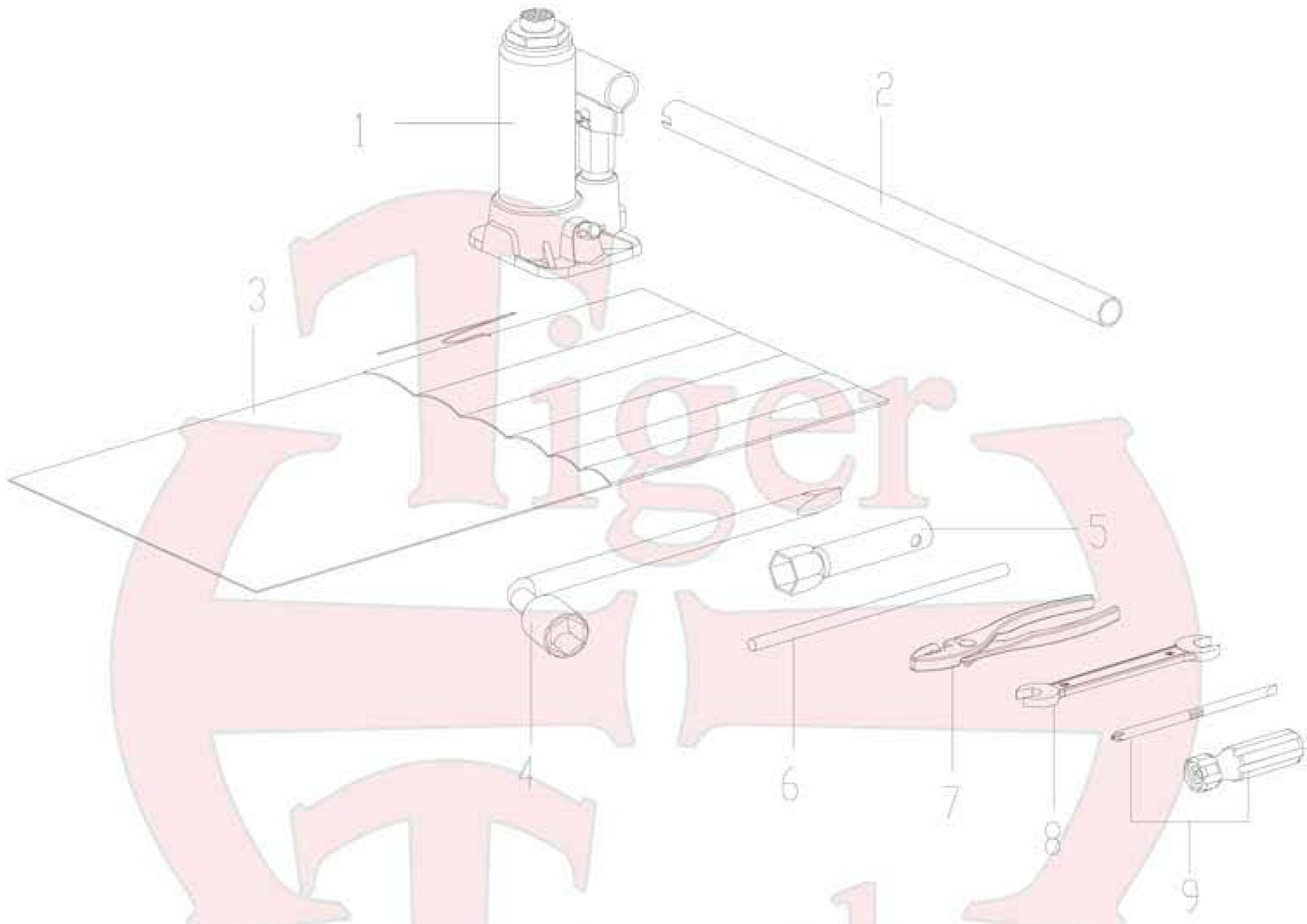

FIGURE 57 TOOL KIT

NO	DESCRIPTION	PART NO.	ALL	SINGLE CAB	CREW CAB	NOTE
1	HYDRAULIC JACK	CK3900118N1	1			
2	JACK HANDLE	CK3900119N1	1			
3	TOOL BAG	CK3900111N1	1			
4	WRENCH	CK3900117N1	1			
5	SPARK PLUG SOCKET	CK3900115N1	1			
6	SPARK PLUG SOCKET WRENCH	CK3900116N1	1			
7	PLIER	CK3900114N1	1			
8	WRENCH	CK3900112N1	1			
9	SCREW DRIVER	CK3900113N1	1			

Tiger Truck

FIGURE 58 BODY PANEL

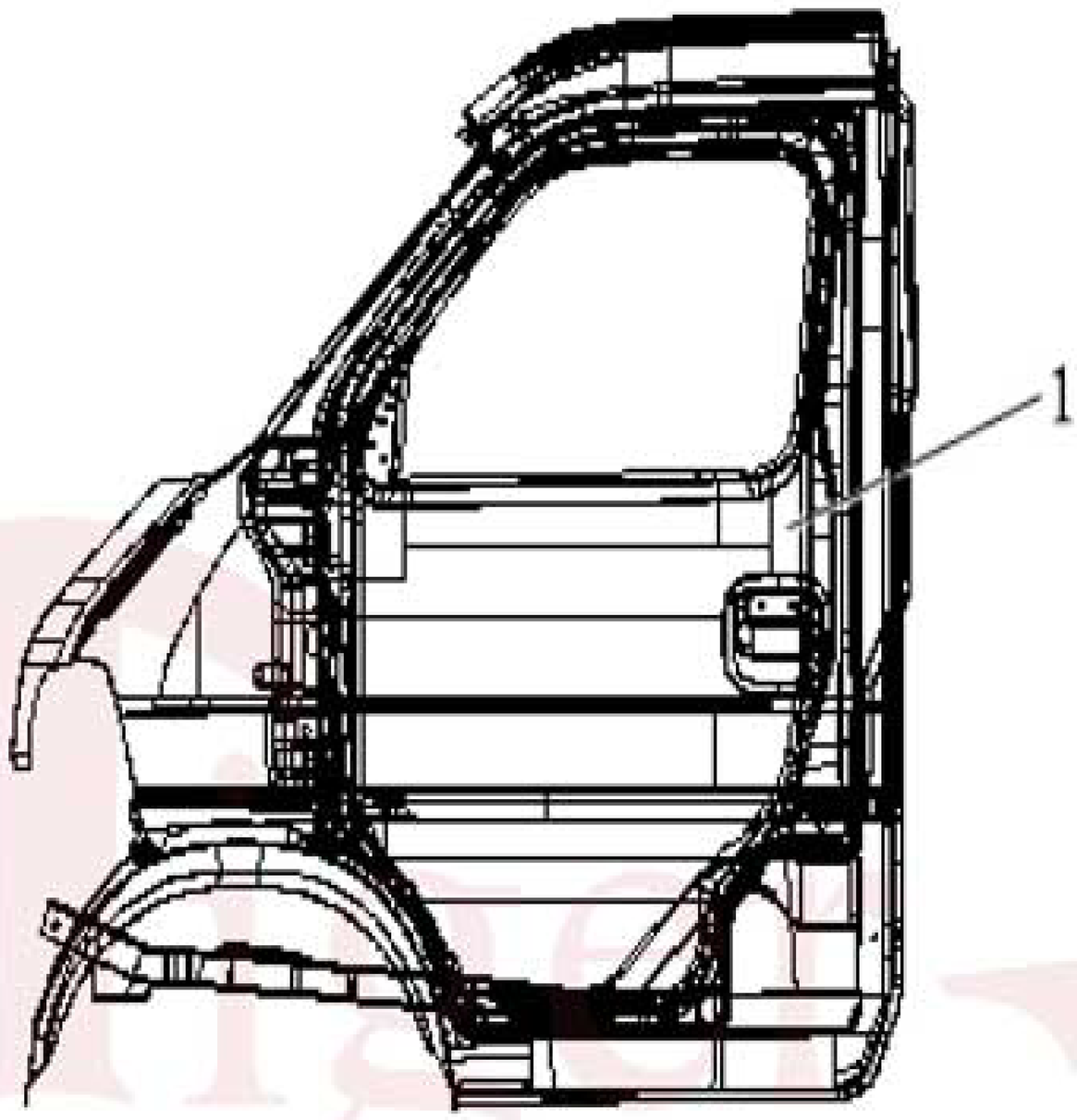

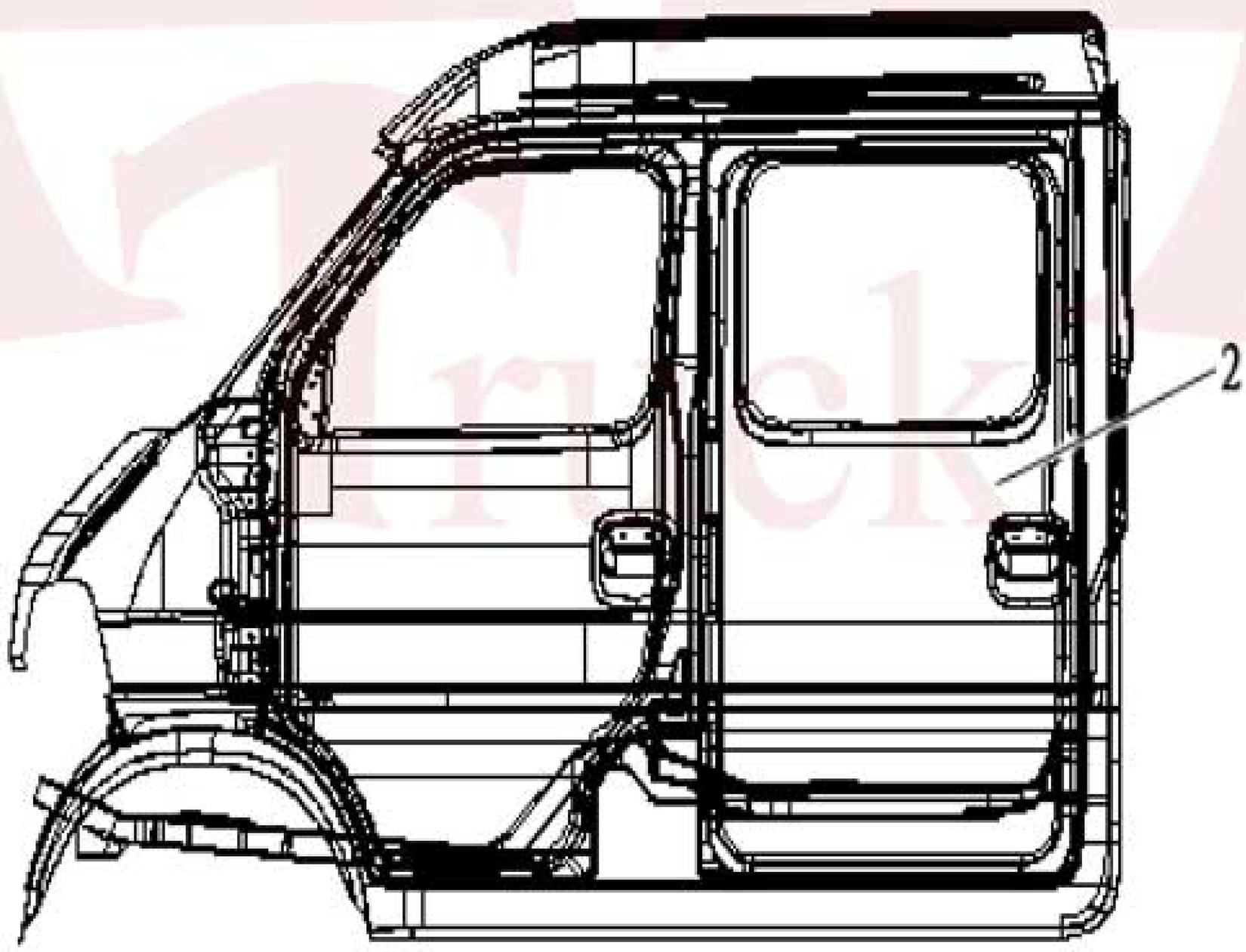

FIGURE 58 BODY PANEL

NO	DESCRIPTION	PART NO.	ALL	SINGLE CAB	CREW CAB	NOTE
1	BODY ASM	CK5000000N1		1		
2		CK5000000N2			1	
	FRONT BUMPER ARM LH	CK5000011N1	1			
	FRONT BUMPER ARM RH	CK5000012N1	1			
	FRONT WHEEL MUD BAFFLE LH	CK5000013N1	1			
	FRONT WHEEL MUD BAFFLE RH	CK5000014N1	1			
	BODY ASM (WELDED)	CK5000100N1		1		
		CK5000100N2			1	
	FLOOR PANEL ASM (WELDED)	CK5101100N1		1		
		CK5101100N2			1	
	FRONT WALL ASM (WELDED)	CK5301100N1	1			
	SIDE WALL ASM (WEDLED) LH	CK5401100N1		1		
		CK5401100N2			1	
	SIDE WALL ASM (WEDLED) RH	CK5401200N1		1		
		CK5401200N2			1	
	REAR WALL ASM (WELDED)	CK5601100N3		1		
		CK5601100N4			1	
	ROOF ASM	CK5701100N1		1		
		CK5701100N2			1	
	ROOF SUPPORT BEAM	CK5701101N2			1	
	FRONT DOOR WELDED ASM LH	CK6101100N1	1			
	FRONT DOOR WELDING ASM RH	CK6101200N1	1			
	FRONT DOOR HINGE ASM	CK6106110N1	4			
	REAR DOOR WELDED ASM LH	CK6201100N2			1	
	REAR DOOR WELDED ASM RH	CK6201200N2			1	
	REAR DOOR UPPER HINGE ASM LH	CK6206110N2			1	
	REAR DOOR UPPER HINGE ASM RH	CK6206120N2			1	
	REAR DOOR LOWER HINGE ASM LH	CK6206130N2			1	
	REAR DOOR LOWER HINGE ASM RH	CK6206140N2			1	
	COWL UPPER PANEL WELDED ASM	CK8401100N1	1			

FIGURE 58 BODY PANEL

NO	DESCRIPTION	PART NO.	ALL	SINGLE CAB	CREW CAB	NOTE
	COWL UPPER PANEL HINGE ASM LH	CK8401210N1	1			
	COWL UPPER PANEL HINGE ASM RH	CK8401220N1	1			
	FRONT FENDER LH	CK8403011N1	1			
	FRONT FENDER RH	CK8403012N1	1			

Tiger Truck

FIGURE 59 BODY SUSPENSION

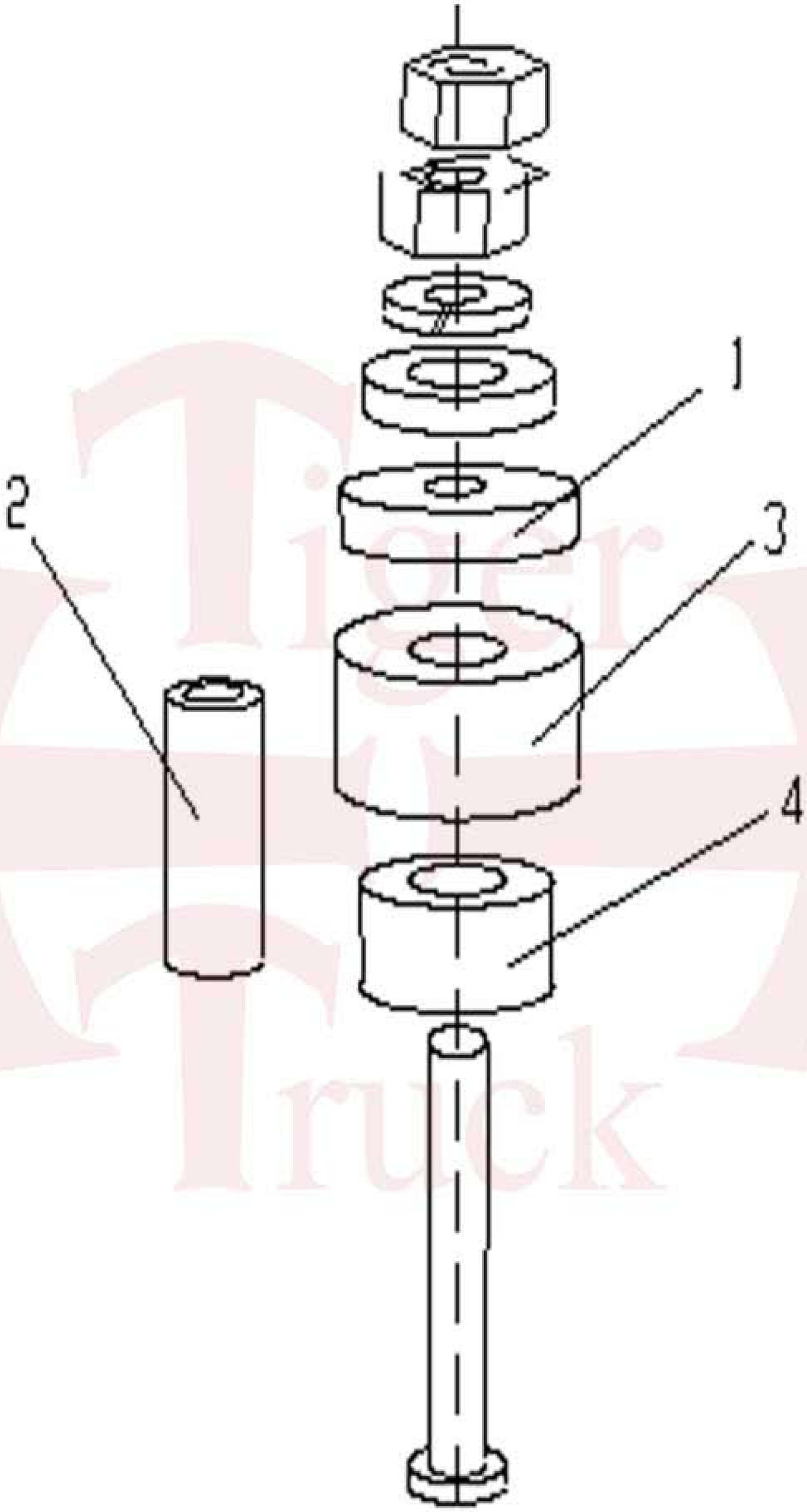

FIGURE 59 BODY SUSPENSION

NO	DESCRIPTION	PART NO.	ALL	SINGLE CAB	CREW CAB	NOTE
1	UPPER BODY SUPPORT PAD	CK5001101A1				
2	BUSHING	CK5001102A1		4	6	
3	UPPER PAD ASM	CK5001110A1		4	6	
4	LOWER PAD ASM	CK5001120A1		4	6	
5	BOLT	Q150B1290TF2		4	6	
6	NUT	Q340B12T13F2		8	12	GB/T6170-2000 M12
7	WASHER	Q40212		16	24	GB/T96.1-2002 12
8	WASHER	Q40312		4	6	GB/T93-1987 12

Tiger Truck

FIGURE 60 CONSOLE

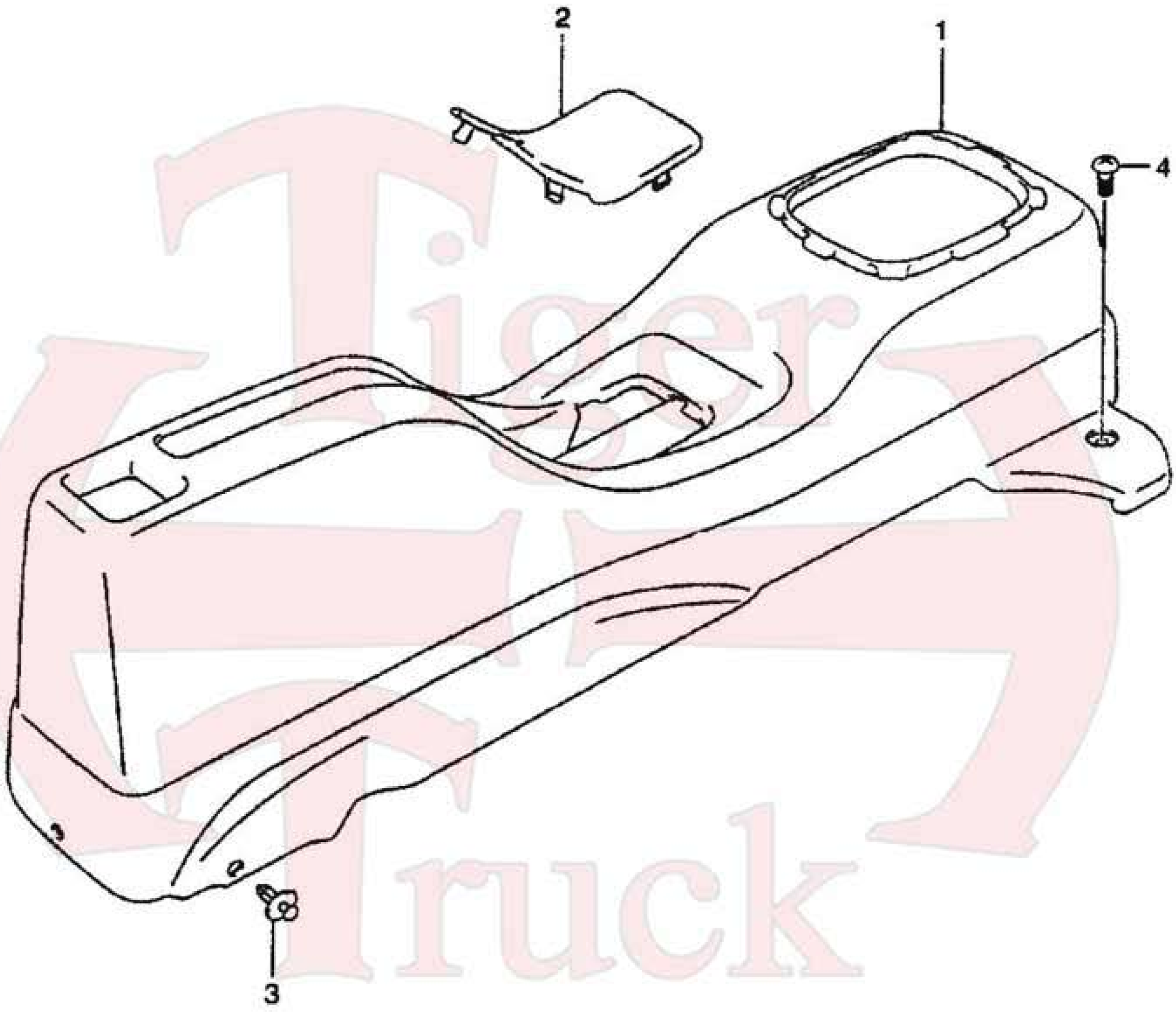

FIGURE 60 CONSOLE

NO	DESCRIPTION	PART NO.	ALL	SINGLE CAB	CREW CAB	NOTE
1	CONSOLE	CK5108110N1	1			5108011-01
2	CONSOLE CAP	CK5108113N1				5108011-01
3	CLIP	09409-07301	2			
4	SCREW	Q2724813	2			

Tiger Truck

FIGURE 61 MUD FLAP

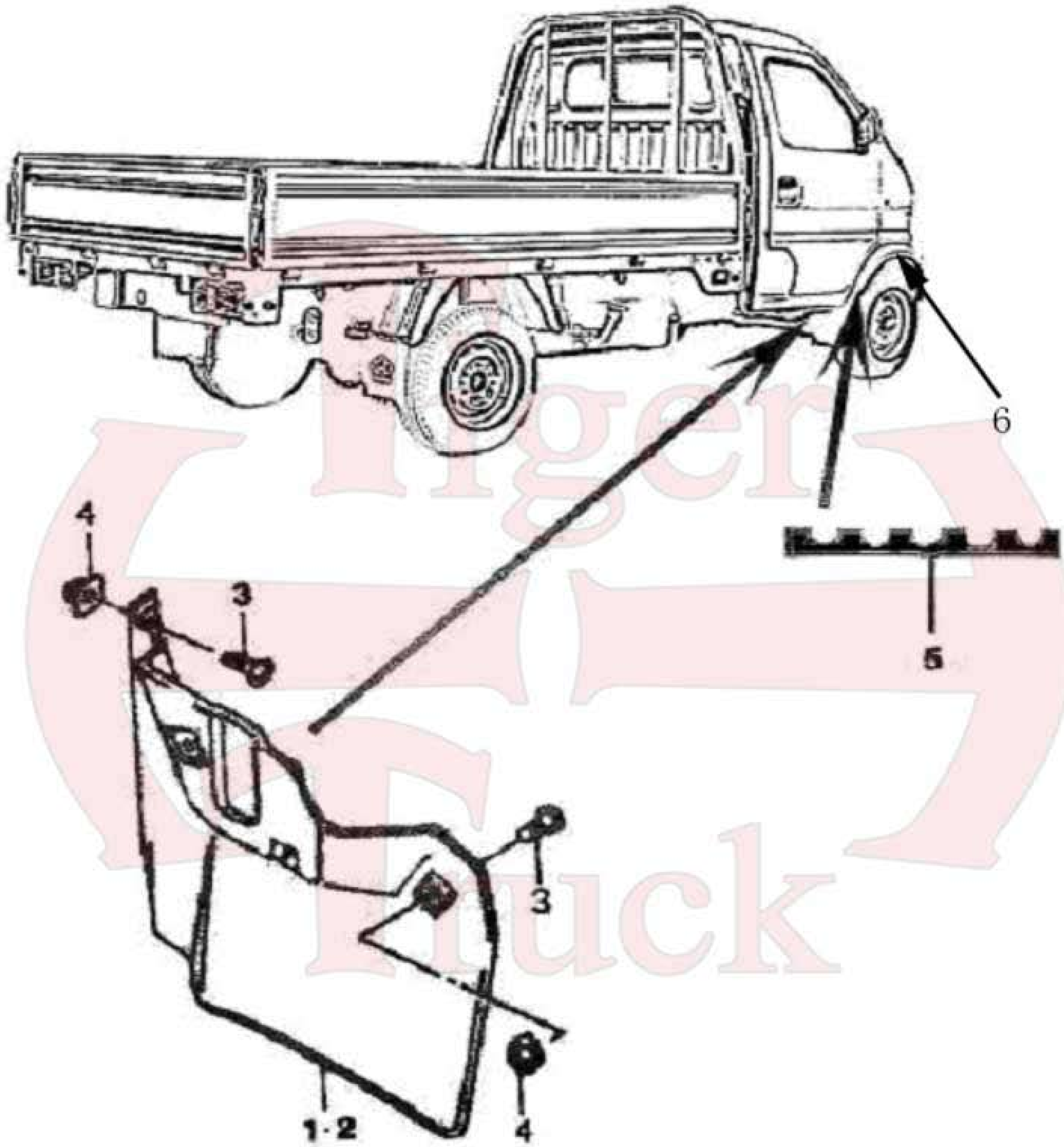

FIGURE 61 MUD FLAP

NO	DESCRIPTION	PART NO.	ALL	SINGLE CAB	CREW CAB	NOTE
1	FRONT WHEEL MUD FLAP LH	CK5100011N1	1			TT-03
2	FRONT WHEEL MUD FLAP RH	CK5100012N1	1			TT-03
3	BOLT	GB/T5781-2000	4			
4	WASHER	GB/T93-1-2002	4			
5	FRONT WHEEL RUBBER TRIM	CK5100013N1	2			
6-1	FRONT WHEEL COVER LH	CK5100015N1	1			
6-2	FRONT WHEEL COVER RH	CK5100016N1	1			
	SMALL PAD	CK5100017N1	10			
	BIG PAD	CK5100018N1	2			
	BOLT	GB/T5781-2000	8			

Tiger Truck

FIGURE 62 INNER GARNISH & WEATHERSTRIP

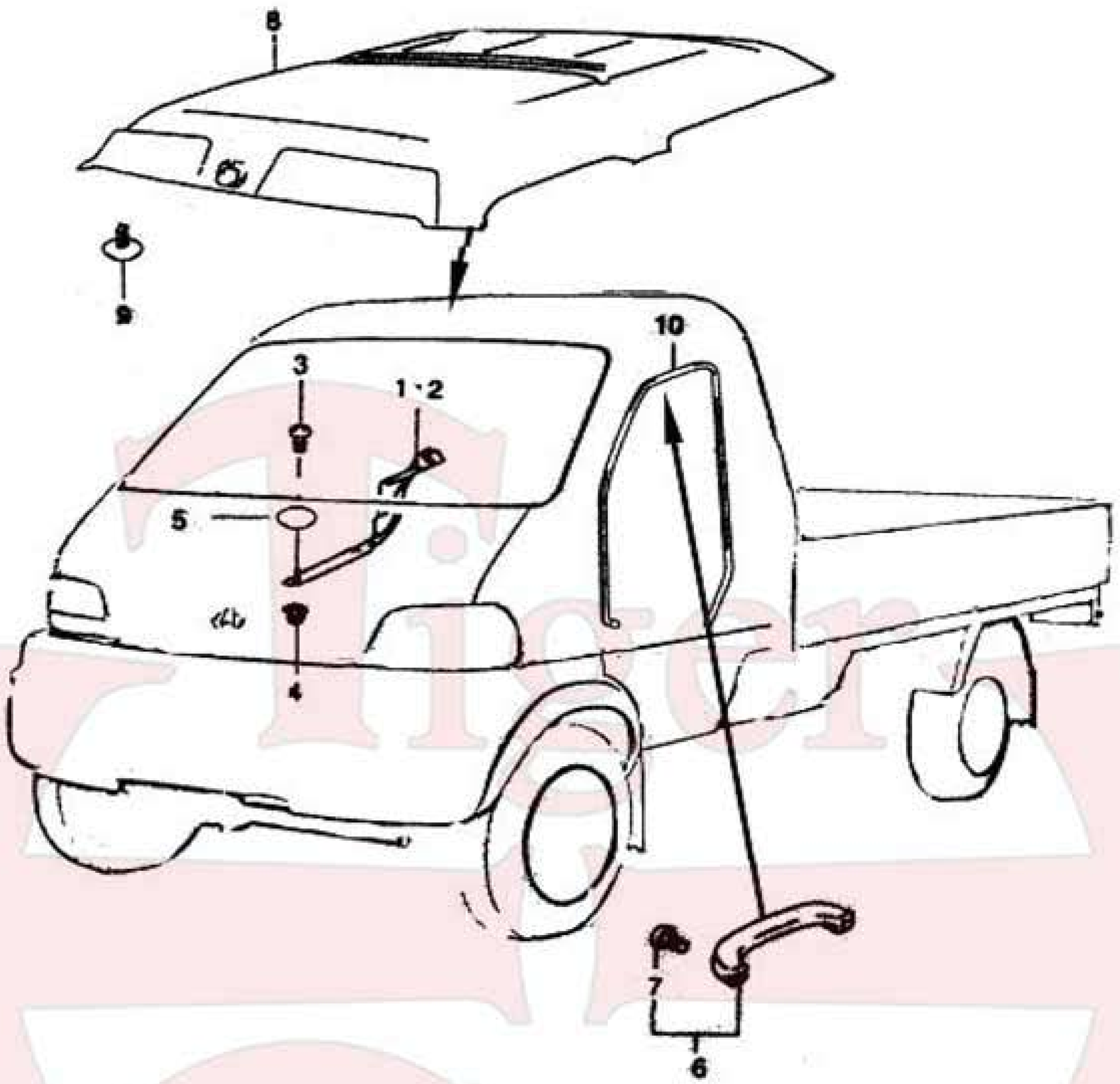

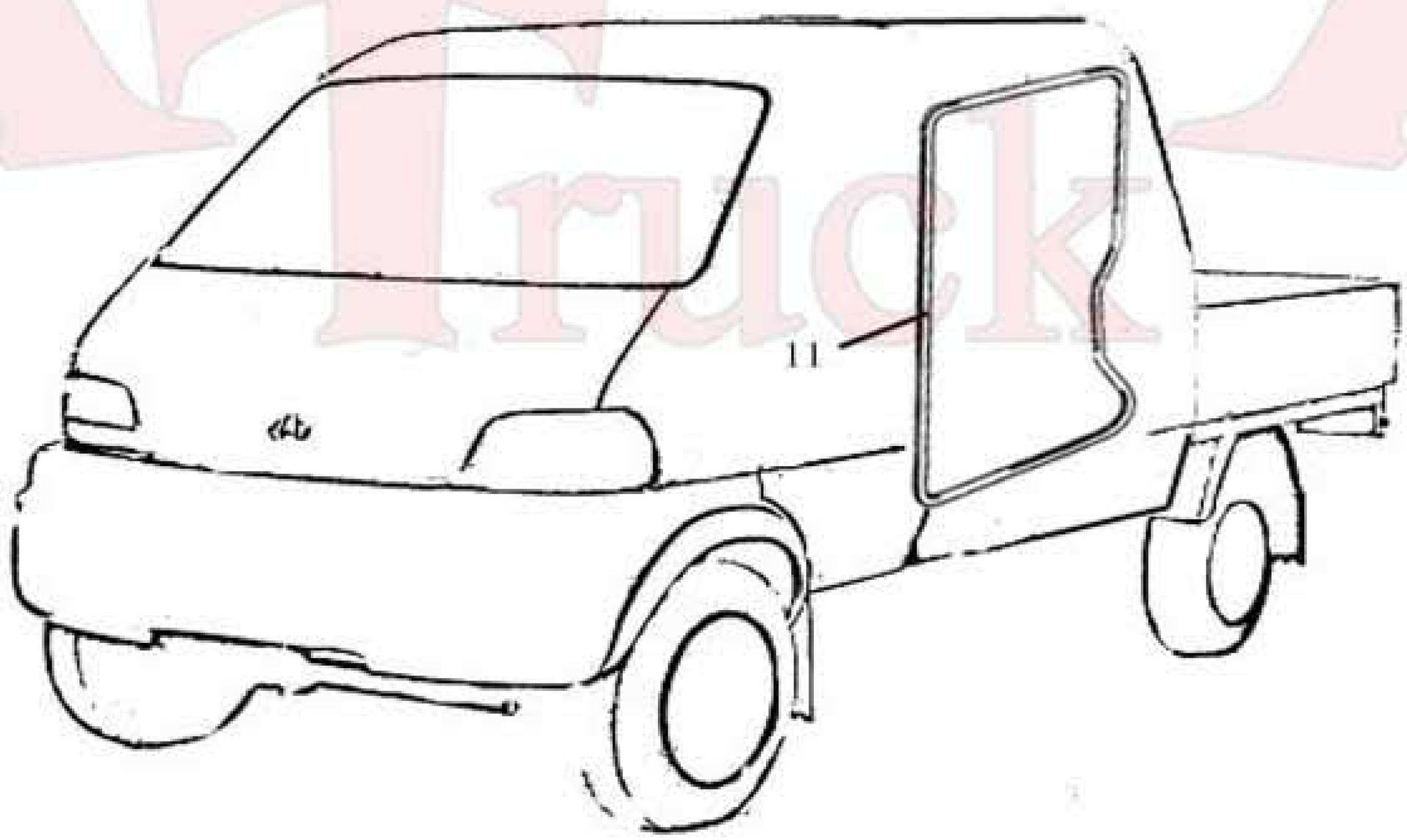

FIGURE 62 INNER GARNISH & WEATHERSTRIP

NO	DESCRIPTION	PART NO.	ALL	SINGLE CAB	CREW CAB	NOTE
1	FRONT FLOOR MAT TRIM LH	CK5109201N1	1			
2	FRONT FLOOR MAT TRIM RH	CK5109202N1	1			
3	SCREW	GB/T845-1985	10			
4	NUT	CK5101103A1	10			
5	WASHER	GB/T848-2002-	10			
6	GRIP ASSITANT	CK5400011N1	3			
7	SCREW	GB/T818-2000	6			
8	ROOF COVER	CK5702100N1		1		OPT
	ROOF COVER	CK5702100N2			1	OPT
9	CLIP	CK5702101N1	6			
10	FRONT DOOR WEATHERSTRIP	CK5400110N1		2		
11	FRONT DOOR WEATHERSTRIP	CK5400120N2			2	

Tiger Truck

FIGURE 63 FLOOR MAT

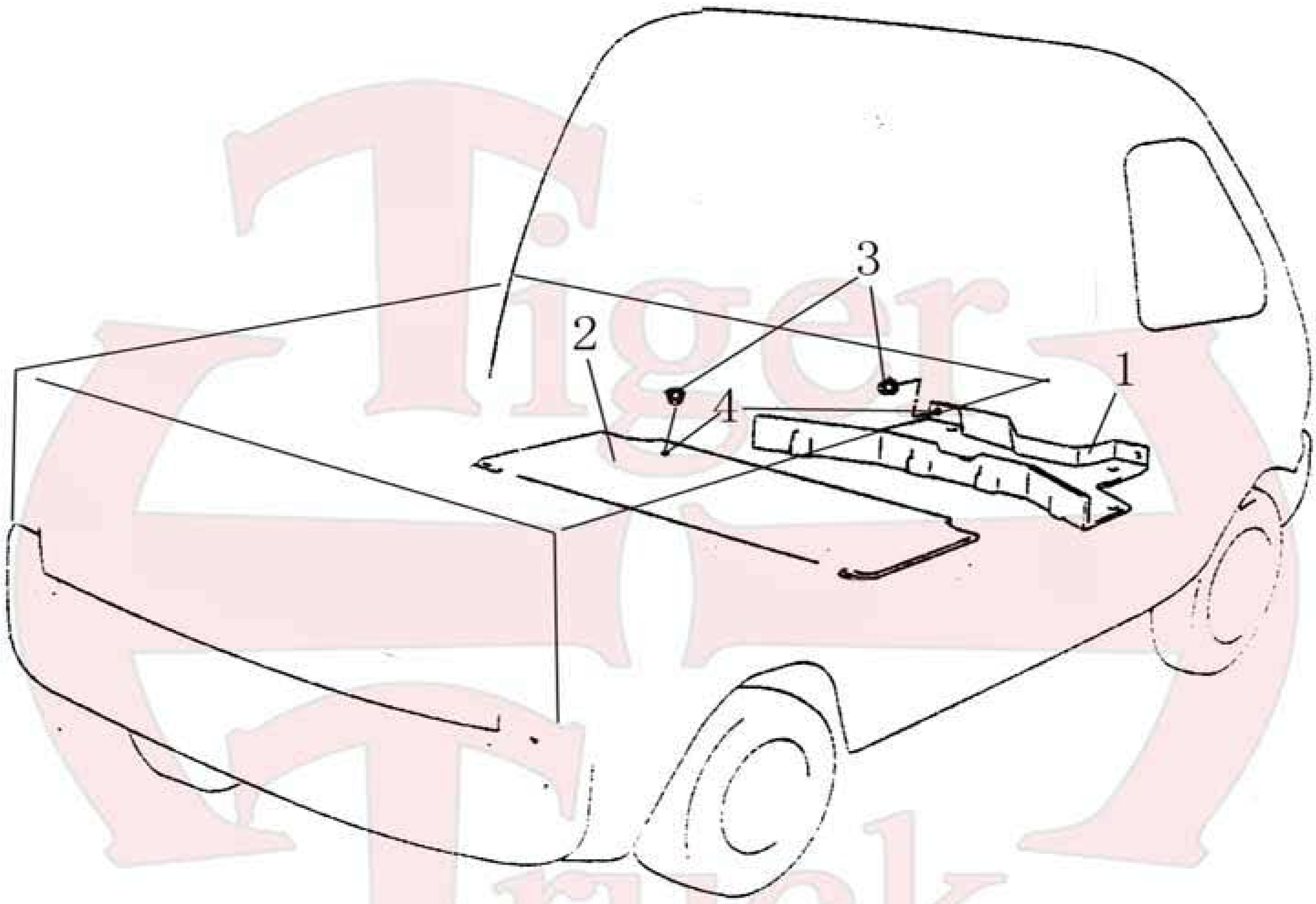

FIGURE 63 FLOOR MAT

NO	DESCRIPTION	PART NO.	ALL	SINGLE CAB	CREW CAB	NOTE
1	FRONT FLOOR MAT	CK5109100N1	1			
2	REAR FLOOR MAT	CK5109200N1			1	
3	FLOOR MAT CLIP PRIMARY CATCH	CK5102101A1		4	11	
4	FLOOR MAT CLIP SECONDARY CATCH	CK5102102A1		4	11	

Tiger Truck

FIGURE 64 FRONT BUMPER

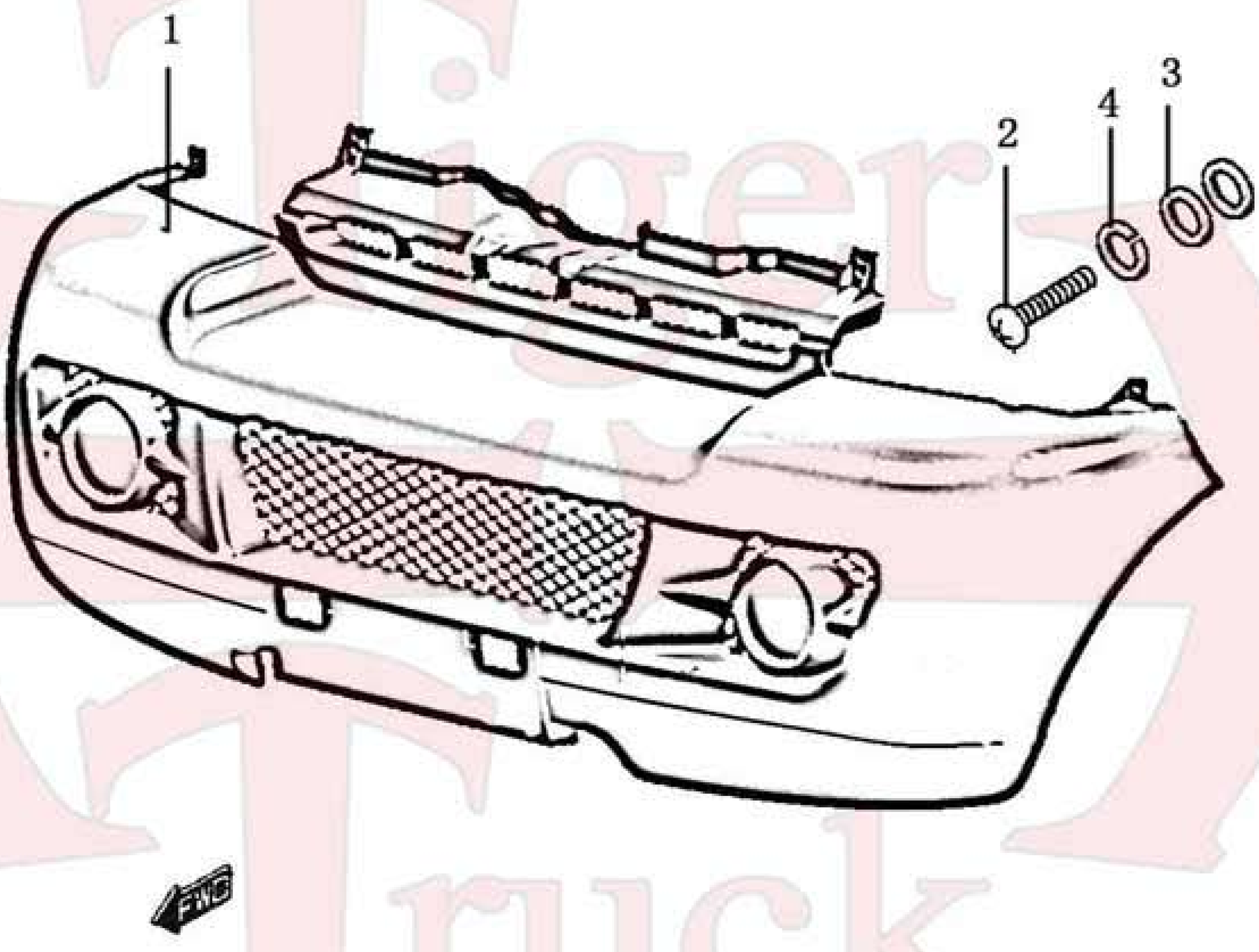

FIGURE 64 FRONT BUMPER

NO	DESCRIPTION	PART NO.	ALL	SINGLE CAB	CREW CAB	NOTE
1	FRONT BUMPER	CK2803011N1	1			
2	BOLT	GB/T5781-2000	12			
3	WASHER	GB/T96.1-2002	18			
4	WASHER	GB/T93-1987	12			

Tiger Truck

FIGURE 65 WIPER MOTOR & WIPER BLADES

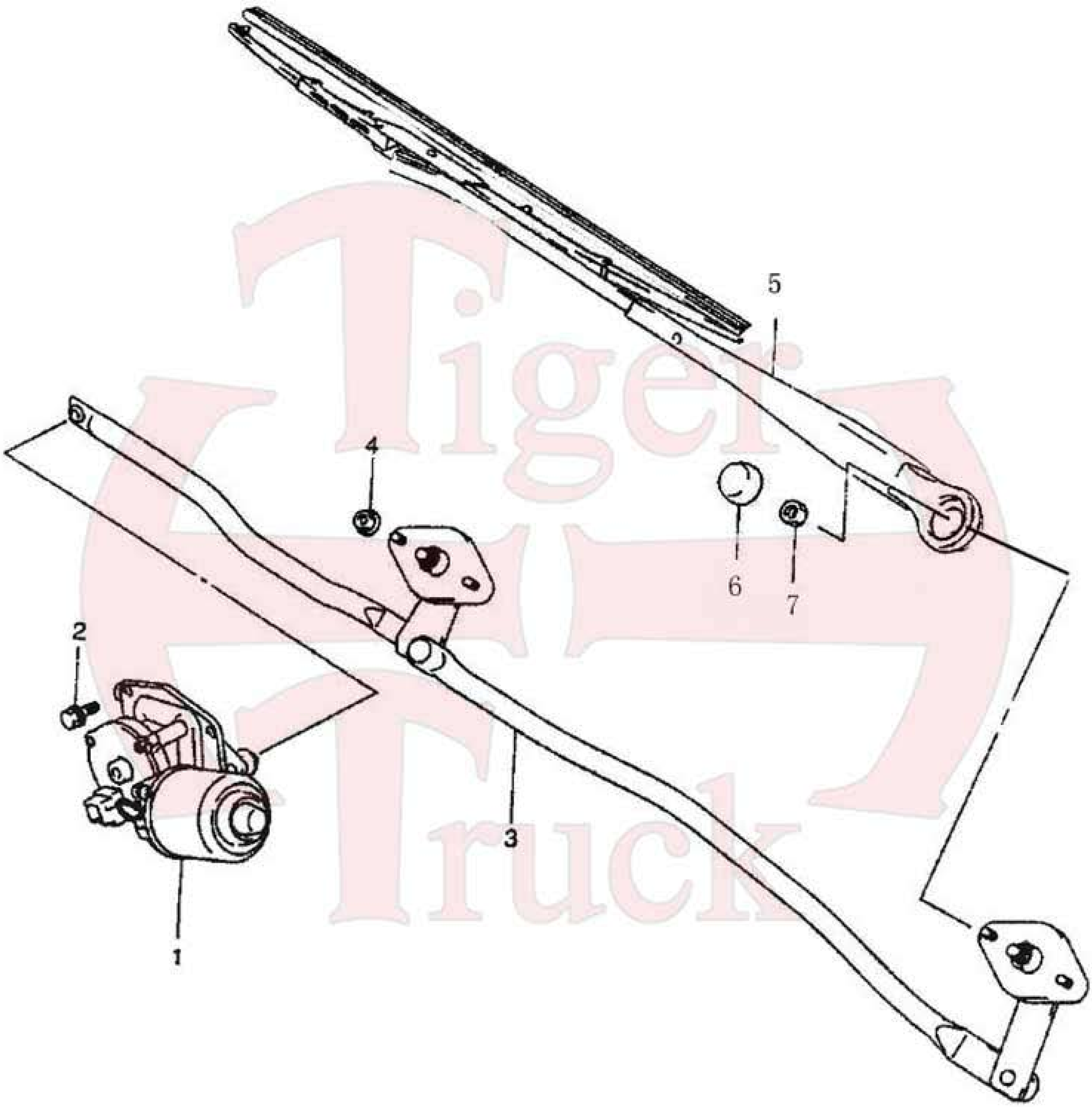

FIGURE 65 WIPER MOTOR & WIPER BLADES

NO	DESCRIPTION	PART NO.	ALL	SINGLE CAB	CREW CAB	NOTE
1	WIPER MOTOR	CK3741100N1	1			
2	BOLT	GB/T5783-2000	3			
3	WIPER LINK ASM	CK5205110N1	1			
4	NUT	GB/T6177.1-2000	4			
5	WIPER ARM	5205090-01	2			5205090-01
	WIPER BLADE	5205070-01	2			5205070-01
	WIPER ARM ASM W/ BLADE	CK5205120N1	N/A			
6	WIPER ARM COVER	CK5205121N1	2			
7	NUT	GB/T6170-2000	2			

Tiger Truck

FIGURE 66 WINDSHIELD WASHER

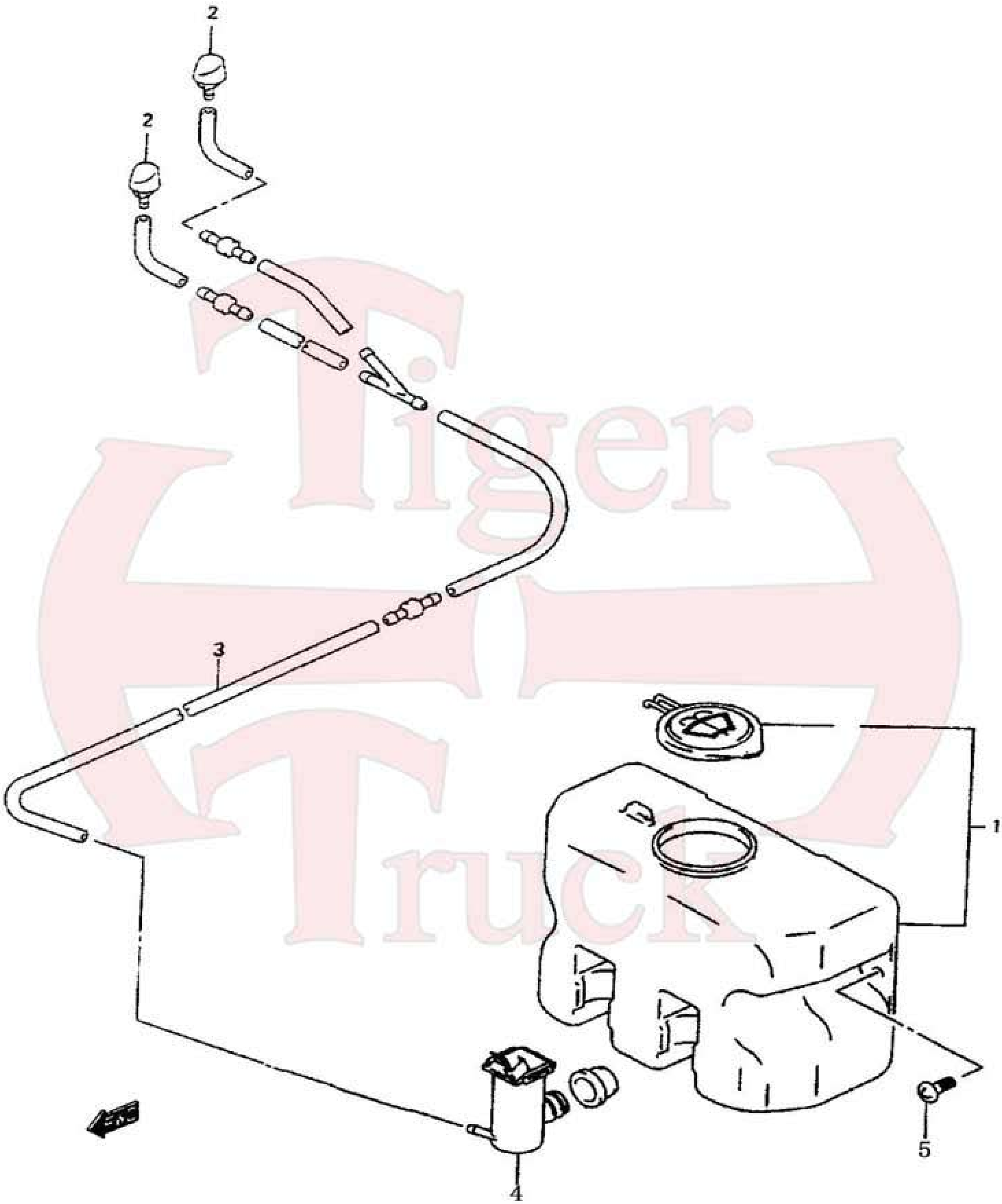

FIGURE 66 FRONT WINSHIELD WASHER

NO	DESCRIPTION	PART NO.	ALL	SINGLE CAB	CREW CAB	NOTE
1	WASHER TANK ASM	CK5207100N1	1			5207100-01
2	NOZZLE	CK5207220N1	2			5207020-01
3	WASHER PIPE	CK5207210N1	1			
4	WASHER MOTOR	SEE CK5207100N1				5207100-01
5	SCREW	GB/T5781-2000	2			

Tiger Truck

FIGURE 67 WINDSHIELD & REAR GLASS

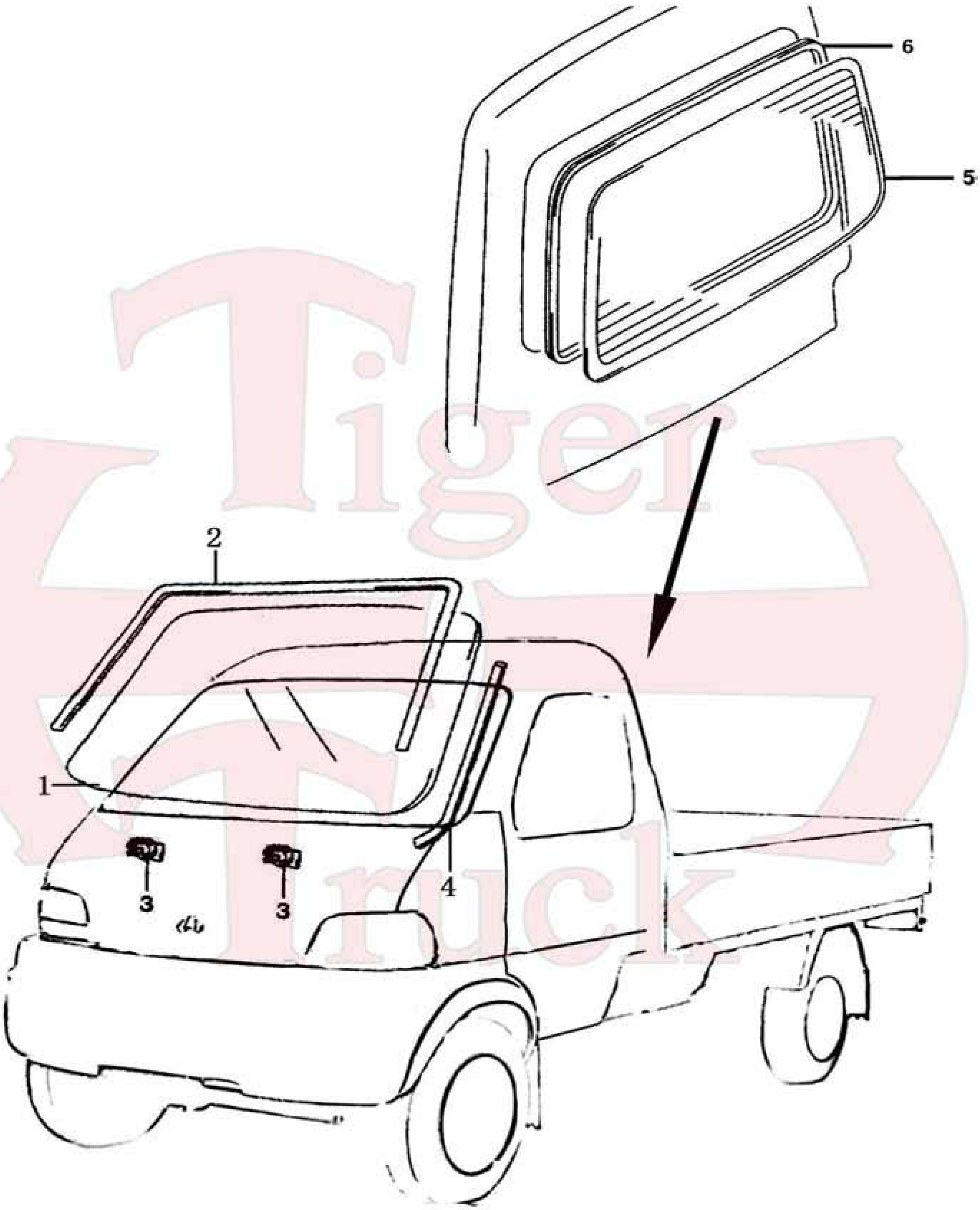

FIGURE 67 FRONT WINSHIELD & REAR GLASS

NO	DESCRIPTION	PART NO.	ALL	SINGLE CAB	CREW CAB	NOTE
1	WINDHSHIELD GLASS	CK5202011N1	1			
2	WINDSHIELD WEATHERSTRIP	CK5202014N1	1			
3	WINDSHIELD GLASS STOPPER	CK5202013N1	2			
4	SIDE GLASS WEATHERSTRIP	CK5202012N1	2			
5	REAR GLASS	CK5603011N1	1			
6	REAR GLASS WEATHERSTRIP	CK5603012N1	1			

Tiger Truck

FIGURE 68 FRONT HOOD

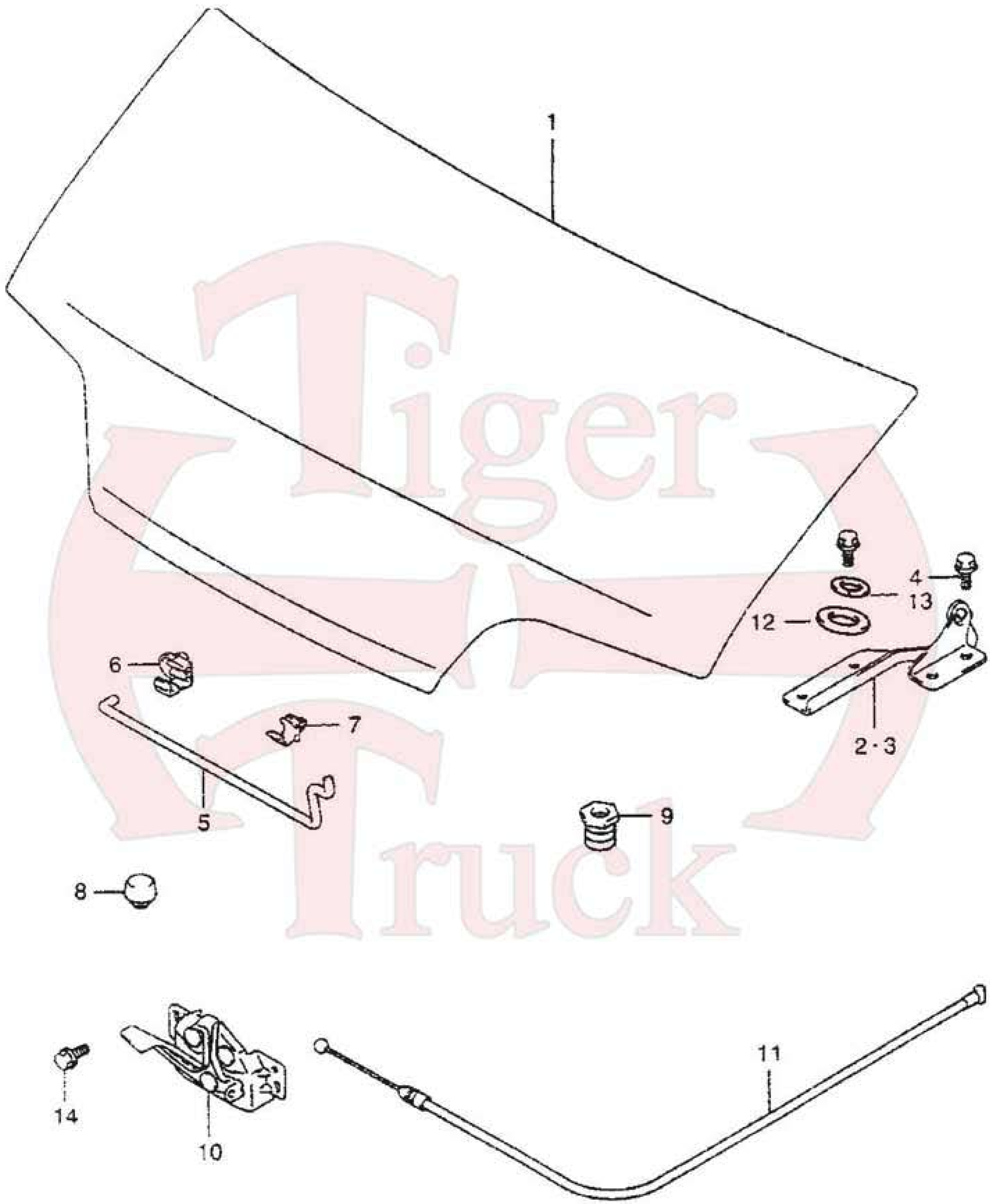

FIGURE 68 FRONT HOOD

NO	DESCRIPTION	PART NO.	ALL	SINGLE CAB	CREW CAB	NOTE
1	FRONT HOOD	CK8401100N1	1			
2	FRONT HOOD HINGE LH	CK8401210N1	1			
3	FRONT HOOD HINGE RH	CK8401220N1	1			
4	BOLT	GB/T5783-2000	1			
5	FRONT HOOD STAY	CK5300013N1	1			8207991-01
6	CLAMP	CK5300015N1	1			
7	FRONT HOOD STAY HOLDER	CK5300014N1	1			
8	FRONT HOOD CENTER CUSHION	CK5300017N1	1			
9	FRONT HOOD SIDE CUSHION	CK5300016N1	2			
10	HOOD LATCH	CK8402130N1	1			8402200-01
11	HOOD RELEASE CABLE	CK8402110N1	1			
12	WASHER	GB/T97.1-2002	8			
13	WASHER	GB/T93-1987	8			
14	BOLT	GB/T5783-2000	2			

Tiger Truck

FIGURE 69 FRONT FENDER

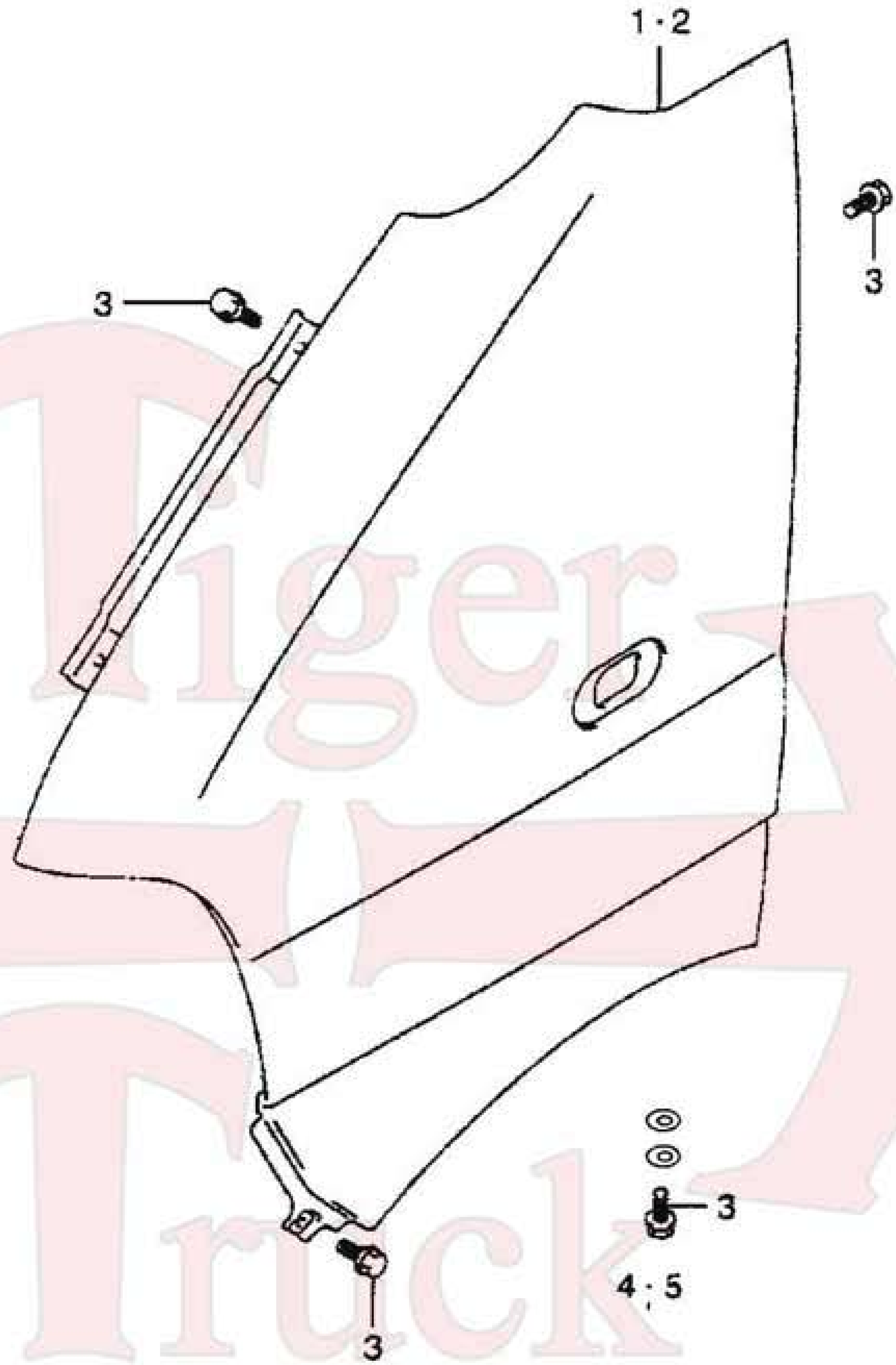

FIGURE 69 FRONT FENDER

NO	DESCRIPTION	PART NO.	ALL	SINGLE CAB	CREW CAB	NOTE
1	FRONT FENDER PANEL RH	CK8403011N1	1			8403112-01
2	FRONT FENDER PANEL LH	CK8403012N1	1			8403111-01
3	BOLT	GB/T5781-2000	12			
4	WASHER	GB/T97.1-2002	12			
5	WASHER	GB/T93-1987	12			

Tiger Truck

FIGURE 70 DOOR PANEL & INNER GARNISH

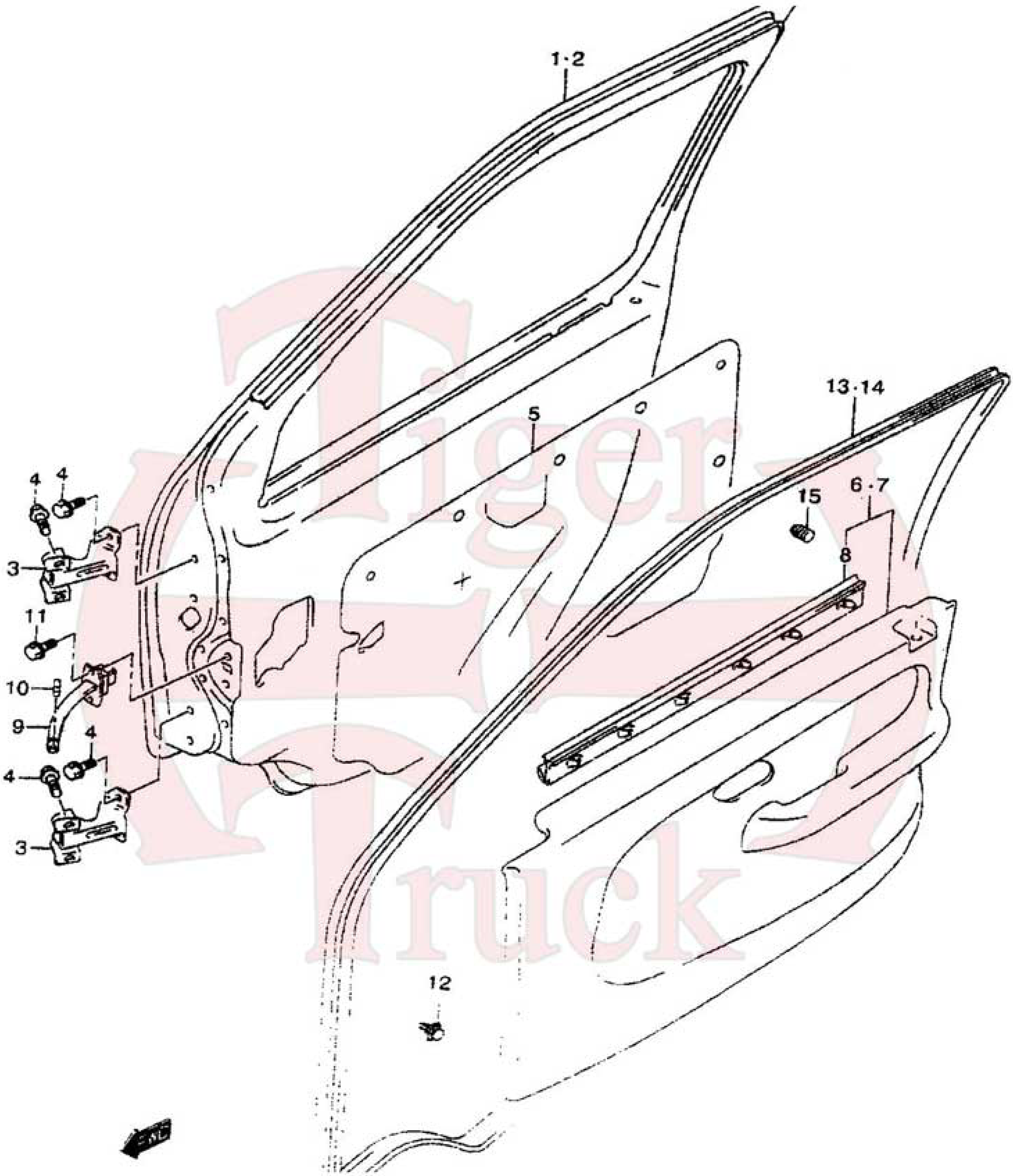

FIGURE 70 DOOR PANEL & GARNISH

NO	DESCRIPTION	PART NO.	ALL	SINGLE CAB	CREW CAB	NOTE
1	FRONT DOOR PANEL LH	CK6101100N1	1			6111100-01
2	FRONT DOOR PANEL RH	CK6101200N1	1			6111200-01
3	FRONT DOOR HINGE	CK6106110N1	4			6106010-01
4	BOLT	GB/T5783-2000	16			
5	FRONT DOOR SEALING COVER	CK6102011N1	2			6102012-01
6	FRONT DOOR INNER DOOR PANEL LH	CK6102100N1	1			6102010-03
7	FRONT DOOR INNER DOOR PANEL RH	CK6102200N1	1			6102020-03
8	DOOR INNER RR WEATHERSTRIP	CK6107430N1	2			6207114-01
9	FRONT DOOR OPEN STOPPER	CK6109110N1	2			
10	FRONT DOOR OPEN STOPPER PIN	CK6109111N1	2			
11	BOLT	GB/T5781-2000	4			
12	DOOR PANEL CLIP	09409-08402	20			
13	FRONT DOOR WEATHERSTRIP LH	CK6107201N1	1			6107201-01
14	FRONT DOOR WEATHERSTRIP RH	CK6107202N1	1			6107202-01
15	FRONT DOOR LOWER STOPPER	CK6107012N1	2			5200114-01

FIGURE 71 DOOR WINDOW & REGULATOR

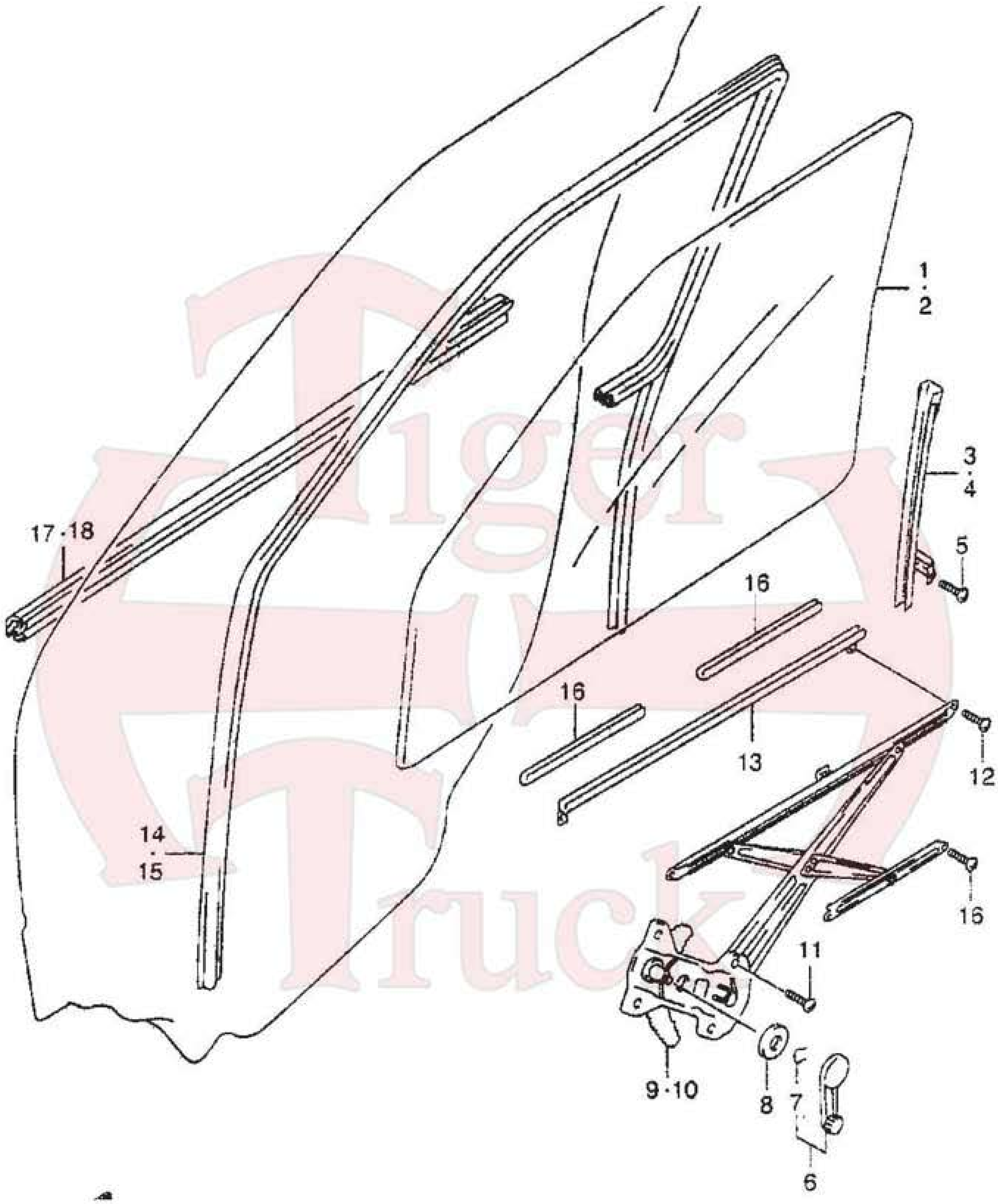

FIGURE 71 DOOR WINDOW & REGULATOR

1	FRONT DOOR GLASS LH	CK6103011N1	1			
2	FRONT DOOR GLASS RH	CK6103O12N1	1			
3	FRONT DOOR REAR SASH LH	CK6101110N1	1			
4	FRONT DOOR REAR SASH RH	CK6101120N1	1			
5	SCREW	GB/T818-2000	2			
6	WINDOW CRANK HANDLE	CK6104310N1	2			6204500-01
7	SNAP RING	SEE CK6104310N1	A/R			10106404005B
8	CRANK HANDLE ESCUTCHEON	82927-70B00-T01	2			
9	FRONT DOOR WINDOW REGULATOR LH	CK6104100N1	1			
10	FRONT DOOR WINDOW REGULATOR RH	CK6104200N1	1			
11	SCREW	GB/T88-2000	8			
12	BOLT	GB/T5781-2000	4			
13	GLASS BOTTOM CHANNEL	CK6104410N1	2			
14	FRONT DOOR GLASS RUN RH	CK6107301N1	1			
15	FRONT DOOR GLASS RUN LH	CK6107302N1	1			
16	GLASS BOTTOM CHANNEL RUBBER	CK6104421N1	4			
17	FRONT DOOR OUTER RAIL WEATHERSTRIP RH	CK6107410N1	1			
18	FRONT DOOR OUTER RAIL WEATHERSTRIP LH	CK6107420N1	1			

FIGURE 72 DOOR HANDLES & LOCKS

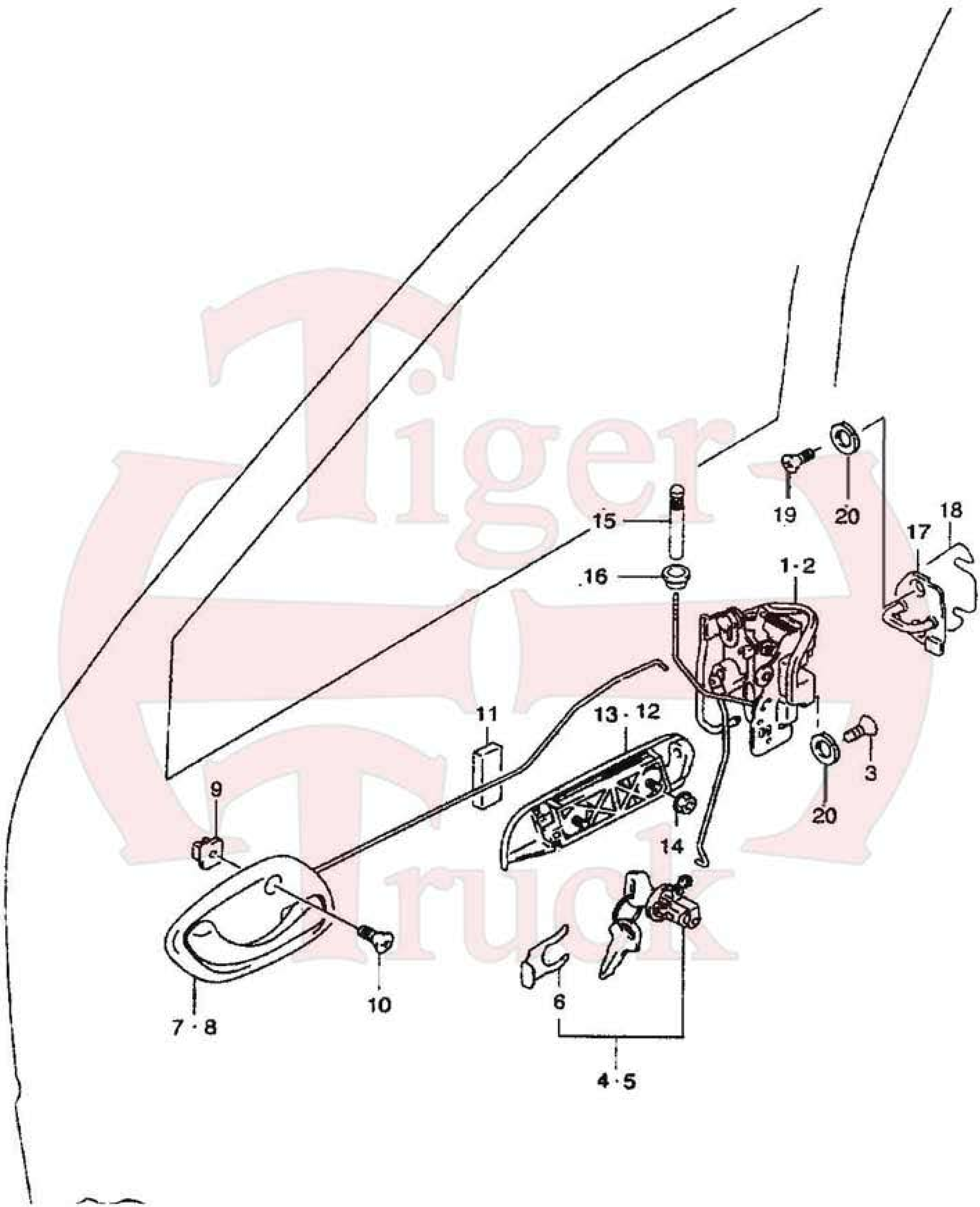

FIGURE 72 DOOR HANDLES & LOCKS

NO	DESCRIPTION	PART NO.	ALL	SINGLE CAB	CREW CAB	NOTE
1	FRONT DOOR LATCH RH	CK6105100N1	1			6105200-01
2	FRONT DOOR LATCH LH	CK6105200N1	1			6105100-01
3	SCREW	GB/T 820-2000	6			
4	FRONT DOOR LOCK RH	CK6105910N1	1			6105910-01
5	FRONT DOOR LOCK LH	CK6105920N1	1			6105940-01
6	FRONT DOOR RETAINER	CK6105901N1	2			
7	INSIDE DOOR HANDLE RH	CK6105300N1	1			6105420-01
8	INSIDE DOOR HANDLE LH	CK6105400N1	1			6105310-01
9	NUT	CK6105014N1	2			
10	SCREW	GB/T 846-1985	2			
11	INSIDE DOOR HANDLE PAD	CK6105013N1	2			
12	OUTSIDE DOOR HANDLE RH	CK6105600N1	1			6105620-01
13	OUTSIDE DOOR HANDLE LH	CK6105500N1	1			6105510-01
14	NUT	GB/T 6177.1-2000	4			
15	INSIDE DOOR LOCK KNOB	CK6105011N1	2			6105208-01
16	INSIDE DOOR LOCK KNOB CAP	CK6105012N1	2			6105212-01
17	FRONT DOOR LATCH	CK6105700N1	2			6105700-01
18	FRONT DOOR LATCH SPACER	CK6105703N1	A/R			6105703-01
19	SCREW	GB/T 819.1-2000	2			
20	WASHER	GB/T 956.1-1987	4			

FIGURE 73 REAR DOOR

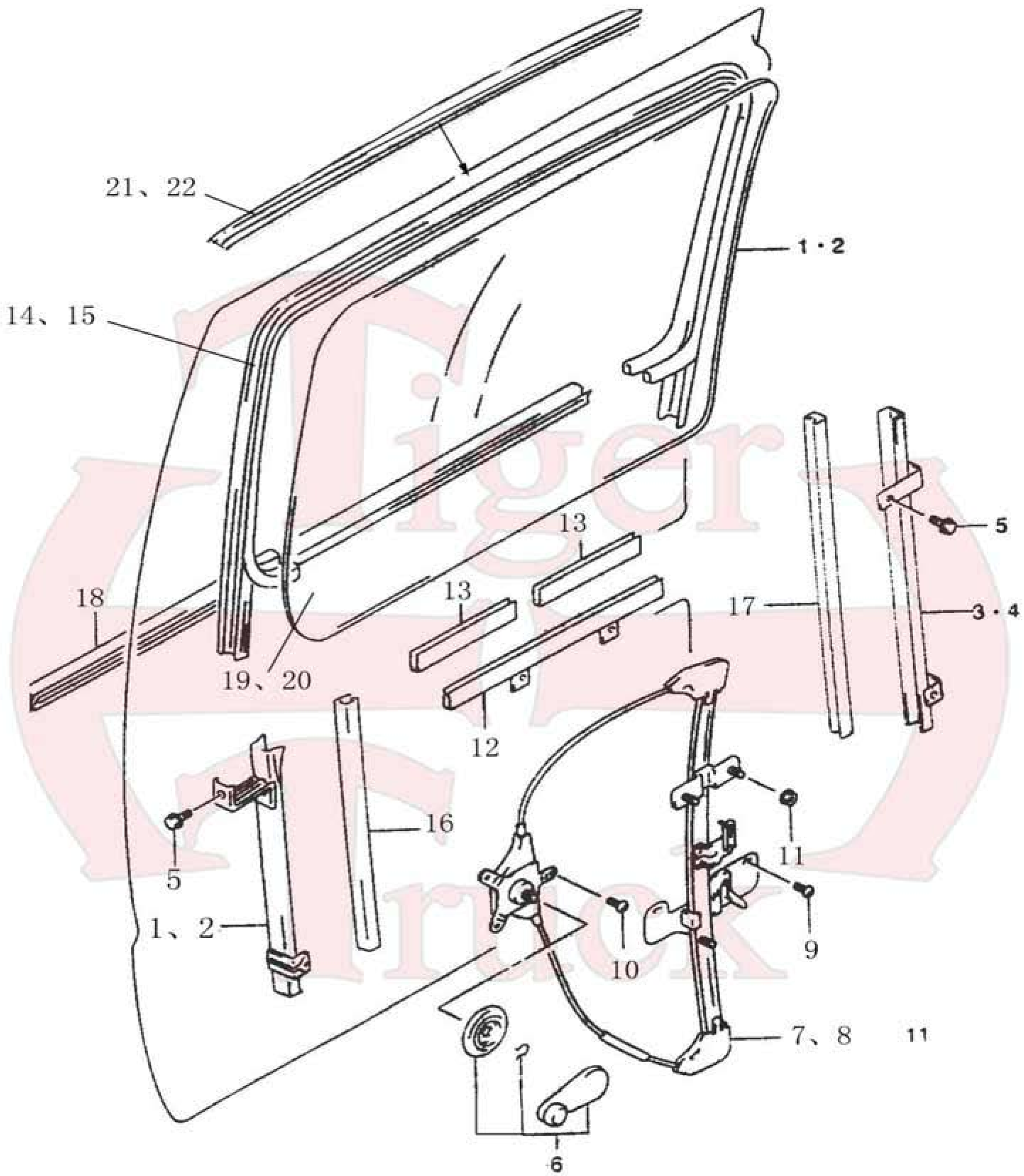

FIGURE 73 REAR DOOR

NO	DESCRIPTION	PART NO.	ALL	SINGLE CAB	CREW CAB	NOTE
1	FRONT REAR DOOR SASH LH	CK6202650N2			1	
2	FRONT REAR DOOR SASH RH	CK6202660N2			1	
3	REAR DOOR REAR SASH LH	CK6202670N2			1	
4	REAR DOOR REAR SASH RH	CK6202680N2			1	
5	BOLT	09128-06001			4	
6	WINDOW CRANK HANDLE	CK6202690N2			2	6204500-01
7	WINDOW REGULATOR LH	CK6202630N2			1	
8	WINDOW REGULATOR RH	CK6202640N2			1	
9	SCREW	09128-06001			6	
10	SCREW	09128-06001			6	
11	NUT	GB/T6177.1-2000			6	
12	GLASS BOTTOM CHANNEL	CK6202 610N2			2	
13	GLASS BOTTOM CHANNEL RUBBER	CK6202893N2			2	
14	DOOR GLASS REAR RUN LH	CK6202810N2			1	6203011-03
15	DOOR GLASS REAR RUN RH	CK6202820N2			1	6203012-03
16	DOOR GLASS FRONT SASH RUN	CK6202892N2			1	
17	DOOR GLASS REAR SASH RUN	CK6202893N2			1	
18	REAR DOOR OUTER LOWER WEATHERSTRIP RAIL	CK6202830N2			2	
19	REAR DOOR GLASS LH	CK6202601N2			1	
20	REAR DOOR GLASS RH	CK6202602N2			1	
21	REAR DOOR OUTER UPPER WEATHERSTRIP RAIL LH	CK6202870N2			1	
22	REAR DOOR OUTER UPPER WEATHERSTRIP RAIL RH	CK6202880N2			1	

FIGURE 74 REAR DOOR HANDLES & LATCHES

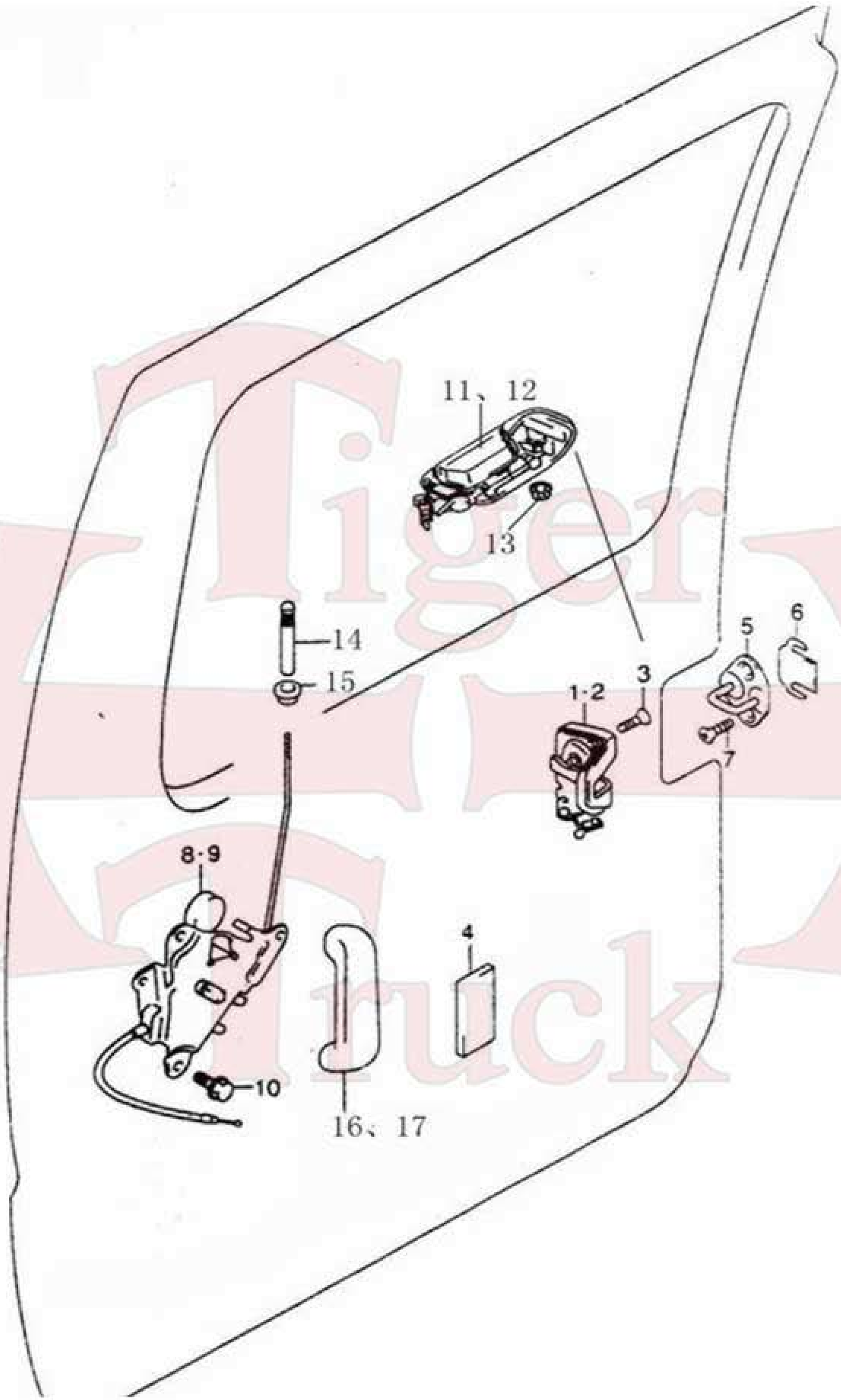

FIGURE 74 REAR DOOR HANDLES & LATCHES

NO	DESCRIPTION	PART NO.	ALL	SINGLE CAB	CREW CAB	NOTE
1	REAR DOOR LATCH LH	CK6202310N2			1	
2	REAR DOOR LATCH RH	CK6202410N2			1	
3	SCREW/ WASHER	09137-06001			6	
4	PAD	CK6102015N1			A/R	
5	REAR DOOR LATCH	CK61023300N1			2	
6	REAR DOOR LATCH SPACER	CK6102341N1			4	
7	SCREW	GB/T819.1-2000			4	
8	REAR DOOR LOCK LEVER ASM LH	CK6202320N2			1	
9	REAR DOOR LOCK LEVER ASM RH	CK6202420N2			1	
10	SCREW	09128-06001			4	
11	REAR DOOR OUTSIDE HANDLE LH	CK6102210N1			1	6105620-01
12	REAR DOOR OUTSIDE HANDLE RH	CK6102220N1			1	6105510-01
13	NUT	GB/T41-2000			4	
14	INSIDE DOOR LOCK KNOB	CK6102011N1			2	
15	INSIDE DOOR LOCK KNOB CAP	CK6102012N1			2	
16	INSIDE DOOR HANDLE LH	CK6202230N2			2	
17	INSIDE DOOR HANDLE RH	CK6202240N2				

FIGURE 75 FRONT SEATS

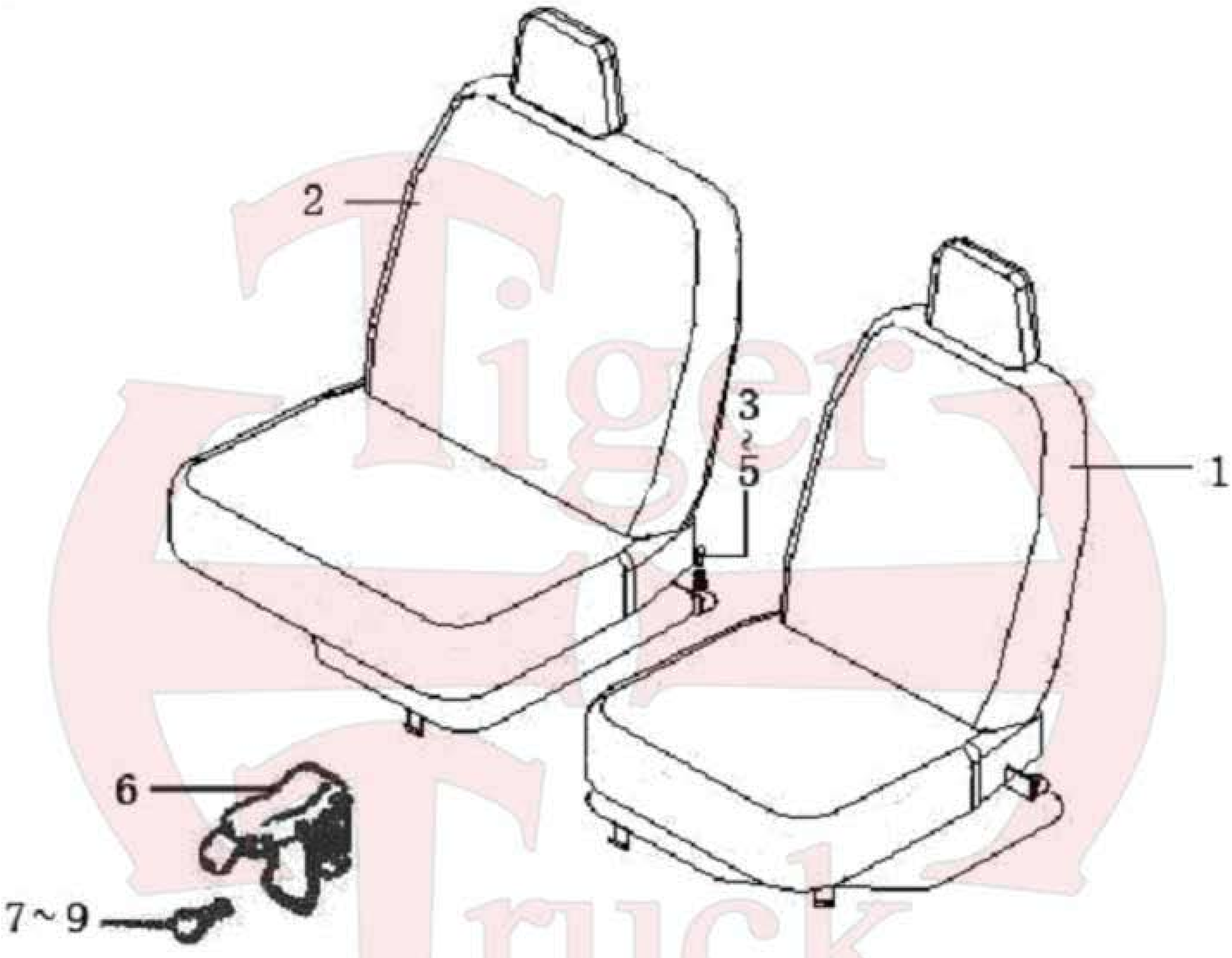

FIGURE 75 FRONT SEAT

NO	DESCRIPTION	PART NO.	ALL	SINGLE CAB	CREW CAB	NOTE
1	FRONT SEAT LH	CK6800100N1	1			
2	FRONT SEAT RH	CK6900100N1	1			
3	BOLT	GB/T5783-2000	2			
4	WASHER	GB/T97.1-2002	2			
5	WASHER	GB/T93-1987	2			
6	SEAT LOCK ASM	CK6809100N1	4			
7	BOLT	GB/T5783-2000	8			
8	WASHER	GB/T97.1-2002	8			
9	WASHER	GB/T93-1987	8			

Tiger Truck

FIGURE 76 REAR SEAT

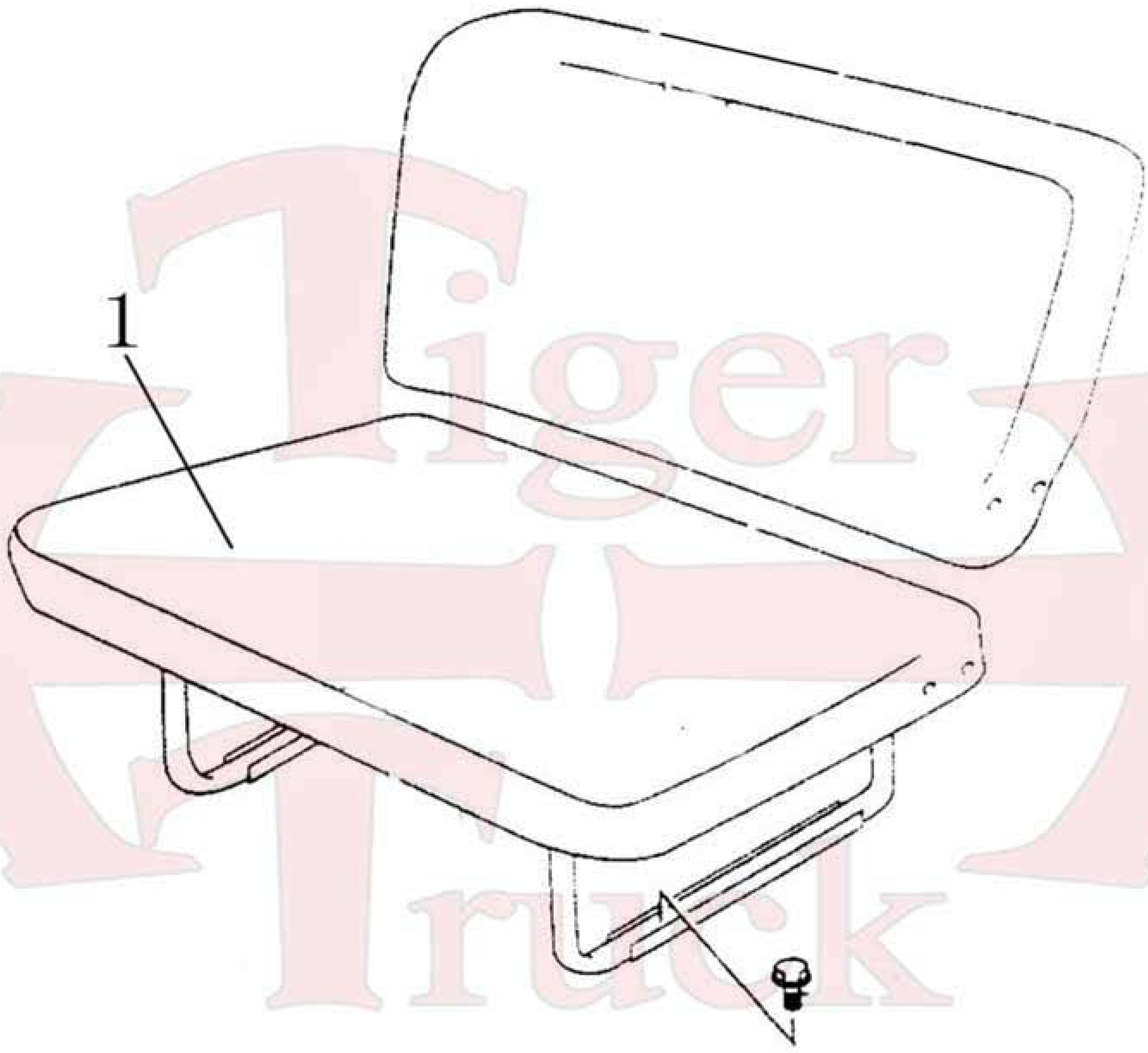

FIGURE 76 REAR SEAT

NO	DESCRIPTION	PART NO.	ALL	SINGLE CAB	CREW CAB	NOTE
1	REAR BENCH SEAT	CK6900200N2			1	
2	BOLT	GB/T5783-2000			4	
3	WASHER	GB/T97.1-2002			4	
4	WASHER	GB/T93-1987			4	

Tiger Truck

FIGURE 77 REAR VIEW MIRROR & SUN VISOR

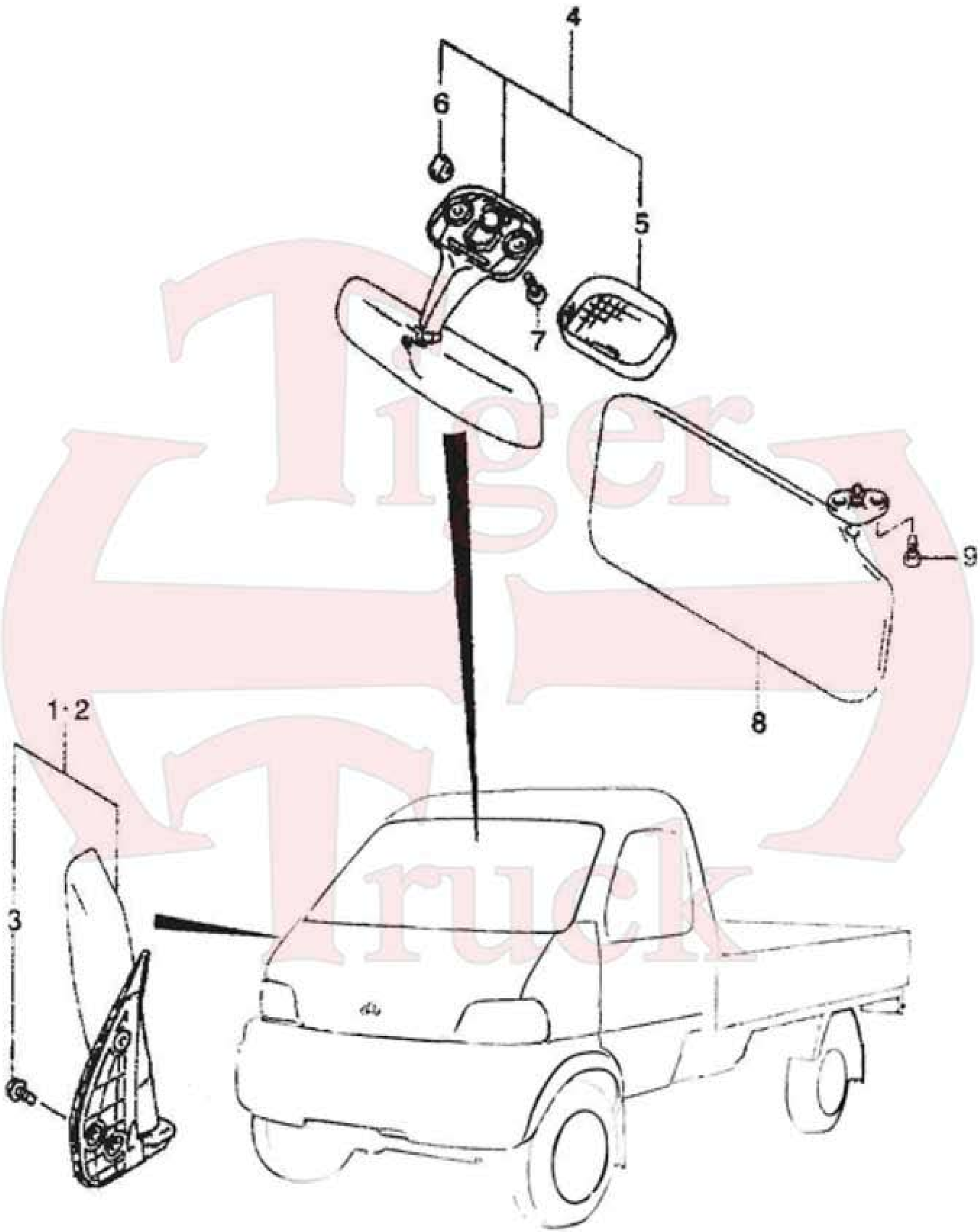

FIGURE 77 REAR VIEW MIRRO & SUN VISOR

NO	DESCRIPTION	PART NO.	ALL	SINGLE CAB	CREW CAB	NOTE
1	EXTERIOR MIRROR LH	CK8202100N1	1			
2	EXTERIOR MIRROR RH	CK8202200N1	1			
3	BOLT	GB/T 5781-2000	6			
4	INTERIOR MIRROR	CK8201100N1	1			8201010-01
5	DOME LIGHT	36212-77A00	1			
6	BULB	09471-12113	1			
7	SCREW	GB/T 818-2000	2			
8	SUN VISOR LH	CK8204110N1	1			
9	SCREW	GB/T 846-1985	2			

Tiger Truck

FIGURE 78 SEAT BELT

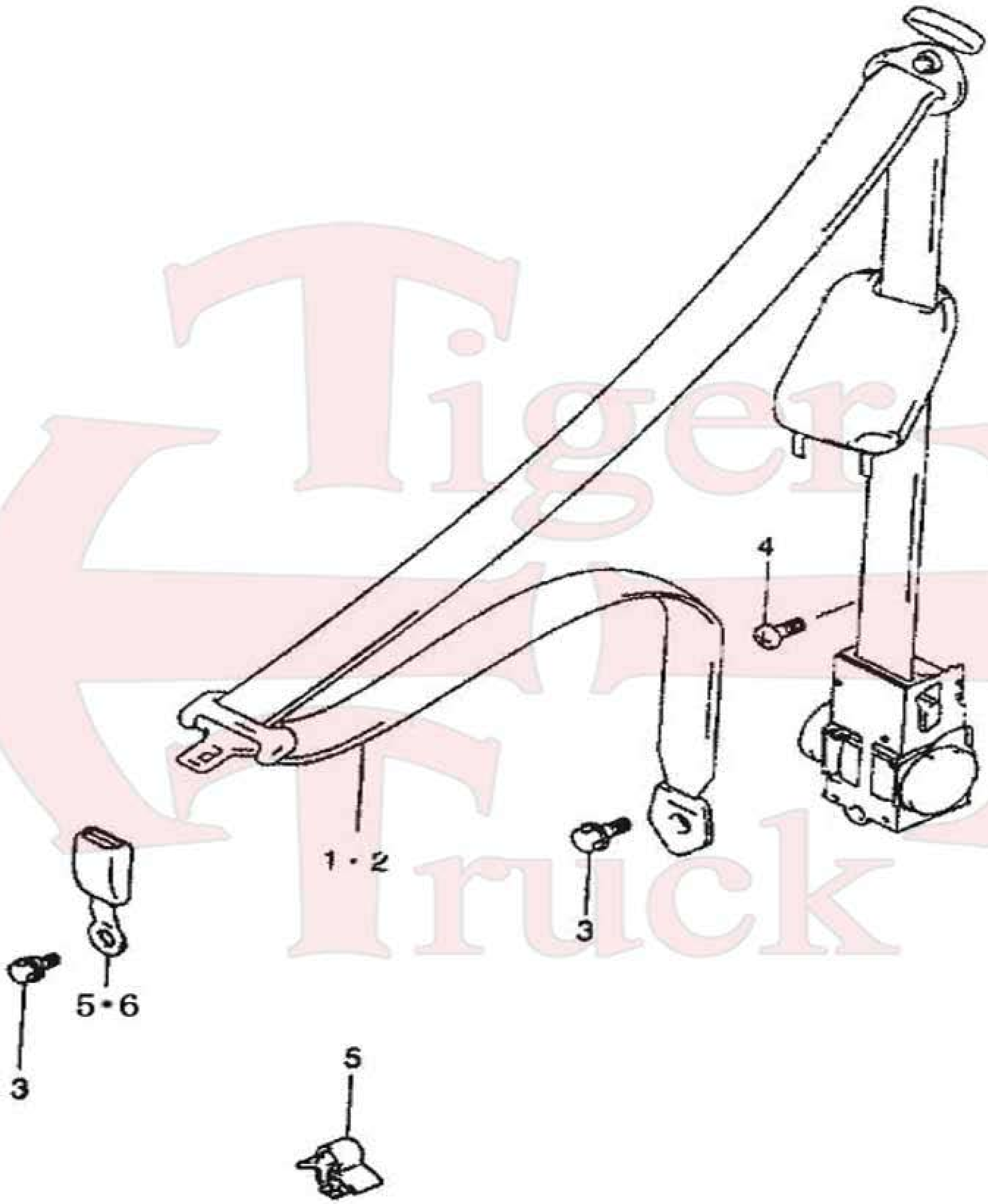

FIGURE 78 SEAT BELT

NO	DESCRIPTION	PART NO.	ALL	SINGLE CAB	CREW CAB	NOTE
1	SEAT BELT LH	CK8212110N1	1			8212100-03
2	SEAT BLET RH	CK8212120N1	1			8212200-02
3	BOLT	09117-11001	4			
4	SCREW	GB/T 845-1985	2			
5	BELT LATCH RH	CK8212130N1	1			YX096-011
6	BELT LATCH LH (WIRED)	CK8212140N1	1			YX096-021

Tiger Truck

FIGURE 79 DASH BOARD

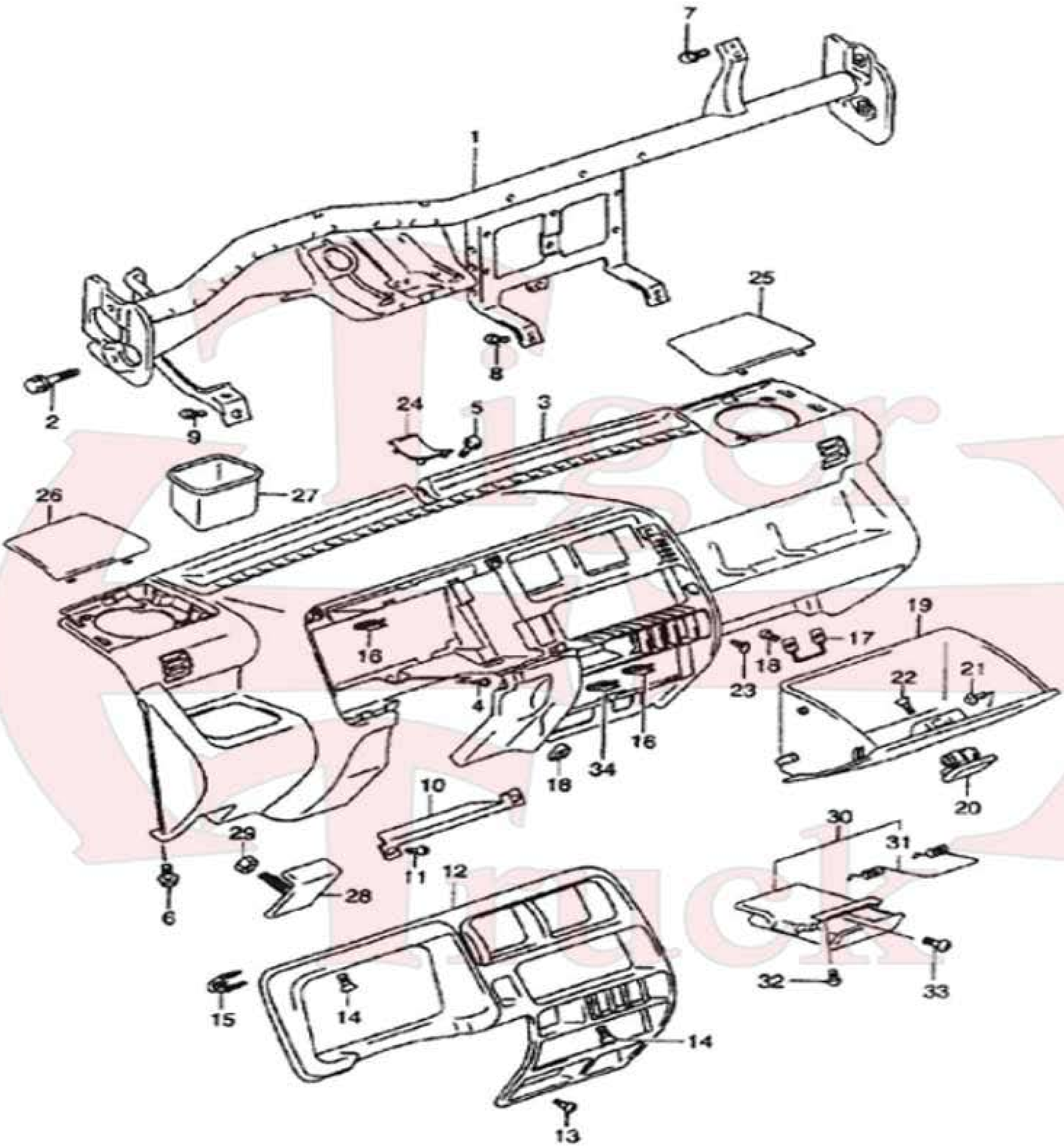

FIGURE 79 DASH BOARD

NO	DESCRIPTION	PART NO.	ALL	SINGLE CAB	CREW CAB	NOTE
1	STEERING SUPPORT ASM	CK5010100N1	1			
2	BOLT	GB/T5782-2000	4			
3	DASH BOARD	CK5305100N1	1			
4	SCREW	GB/T845-1985	1			
5	SCREW	GB/T845-1985	3			
6	SCREW	GB/T845-1985	2			
7	SCREW	GB/T845-1985	1			
8	SCREW	GB/T845-1985	2			
9	SCREW	GB/T818-2000	1			
10	SCREW	GB/T845-1985	1			
11	SCREW	GB/T845-1985	2			
12	SPEEDOMETER PANEL	CK5305106N1	1			
13	SCREW	GB/T845-1985	5			
14	SCREW	GB/T845-1985	4			
15	CLAMP	03242-05123	2			
16	NUT	09148-05001	6			
17	GLOVE BOX LOCK	CK5305110N1	1			5305430-01
18	SCREW	GB/T845-1985	2			
19	GLOVE BOX	73411-77A00-T01	1			
20	GLOVE BOX STRIKER	CK5305108N1	1			
21	CLAMP	09409-07331	1			
22	SCREW	GB/T845-1985	2			
23	GLOVE BOX SIDE MOUNTING	73461-77E00	2			
24	GLOVE BOX LID	CK5305107N1	1			
25	SPEAKER COVER LH	CK5305103N1	1			
26	SPEAKER COVER RH	CK5305104N1	1			
27	DASH BOARD SIDE GROOVE	CK5305105N1	1			
28	HOOD RELEASE LEVER	CK8402120N1	1			8402150-01
29	NUT	09159-14001	1			

FIGURE 79 DASH BOARD

NO	DESCRIPTION	PART NO.	ALL	SINGLE CAB	CREW CAB	NOTE
30	ASH TRAY	CK8203110N1	1			
31	SPRING	89813-60B00	1			
32	SCREW	GB/T845-1985	1			
33	SCREW	GB/T845-1985	1			
34	NUT	09148-05001	1			

Tiger Truck

FIGURE 80 VENTILATOR

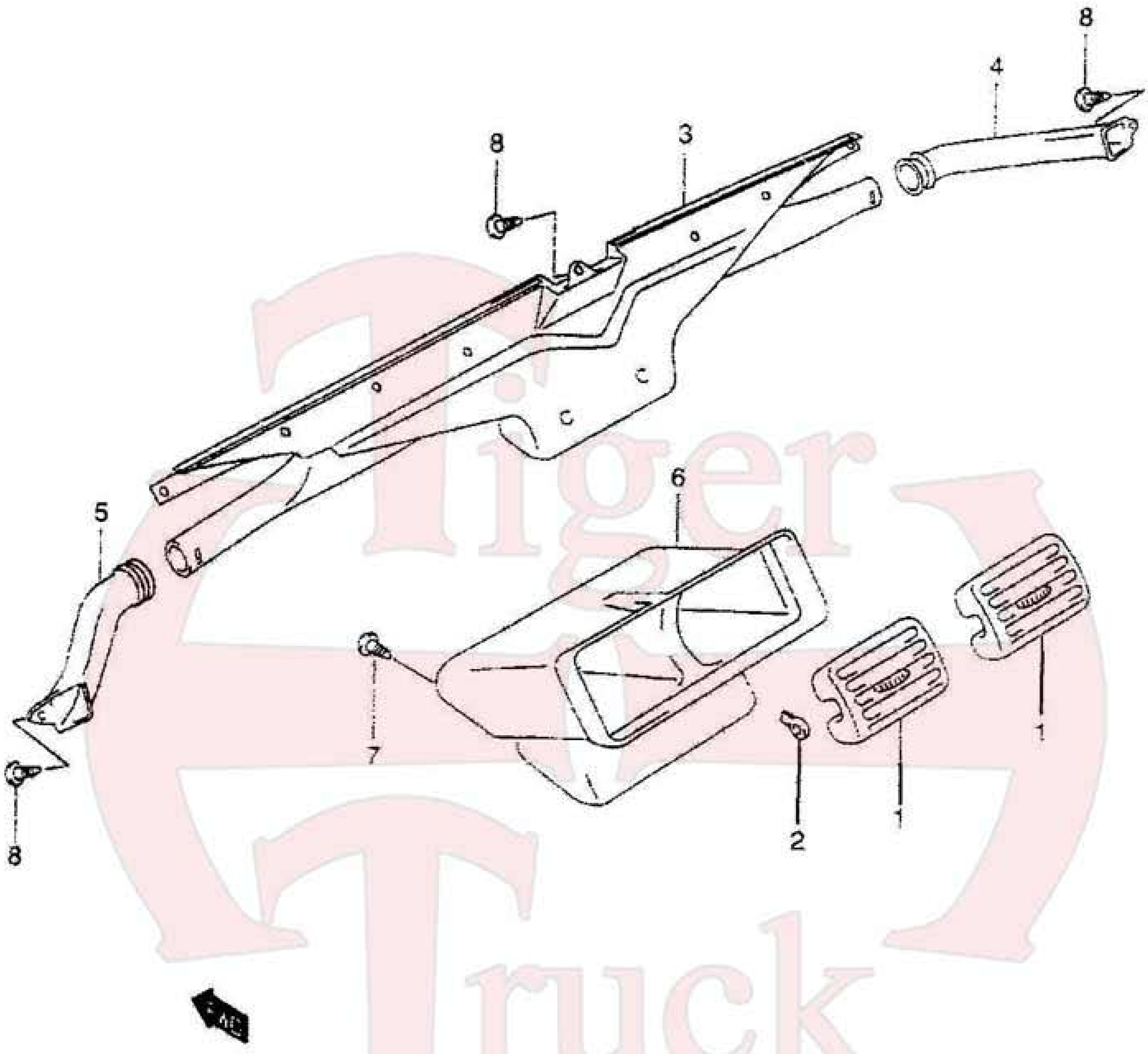

FIGURE 80 VENTILATOR

NO	DESCRIPTION	PART NO.	ALL	SINGLE CAB	CREW CAB	NOTE
1	CENTER VENT LOUVER	CK5305120N1	2			
2	CENTER VENT BASE	CK5305131N1	2			
3	DEFROSTER NOZZLE	CK8101230N1	1			
4	SIDE VENT LOUVER LH	CK8101251N1	1			
5	SIDE VENT LOUVER RH	CK8101252N1	1			
6	CENTER VENT BASE	CK5305131N1	1			
7	SCREW	GB/T845-1985	1			
8	SCREW	GB/T845-1985	5			

Tiger Truck

FIGURE 81 INTAKE CASE

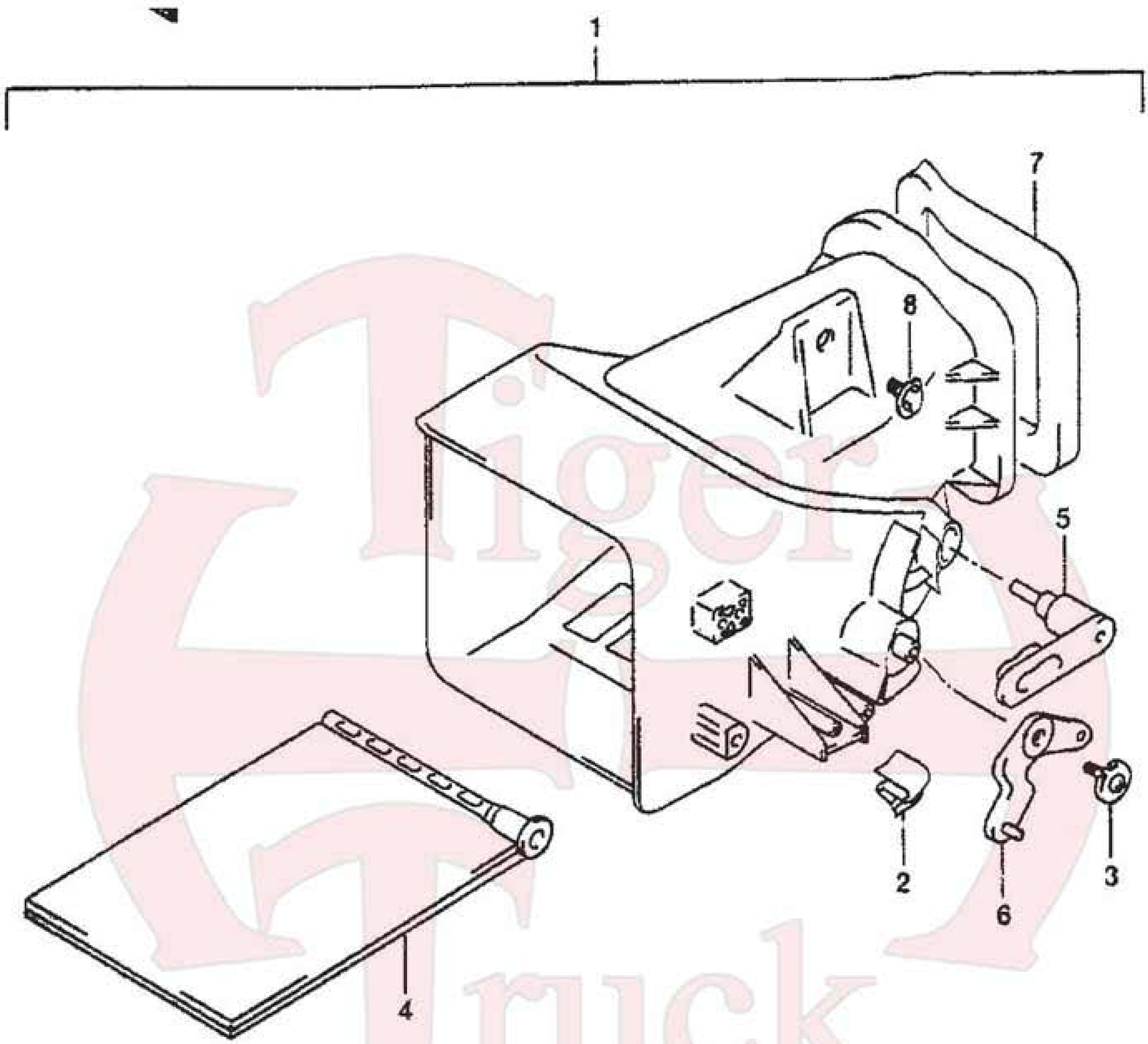

FIGURE 81 INTAKE CASE

NO	DESCRIPTION	PART NO.	ALL	SINGLE CAB	CREW CAB	NOTE
1	INTAKE CASE	CK8101220N1	1			
2	CLAMP	CK8101220N1-001	1			
3	SCREW	CK8101220N1-002	1			
4	INTAKE DOOR CASE	CK8101220N1-003	1			
5	INTAKE DOOR CASE SHAFT	CK8101220N1-004	1			
6	INTAKE DOOR CONTROL LEVER	CK8101220N1-005	1			
7	GASKET	CK8101220N1-006	1			
8	BOLT	GB/T5781-2000	1			

Tiger Truck

FIGURE 82 HEATER

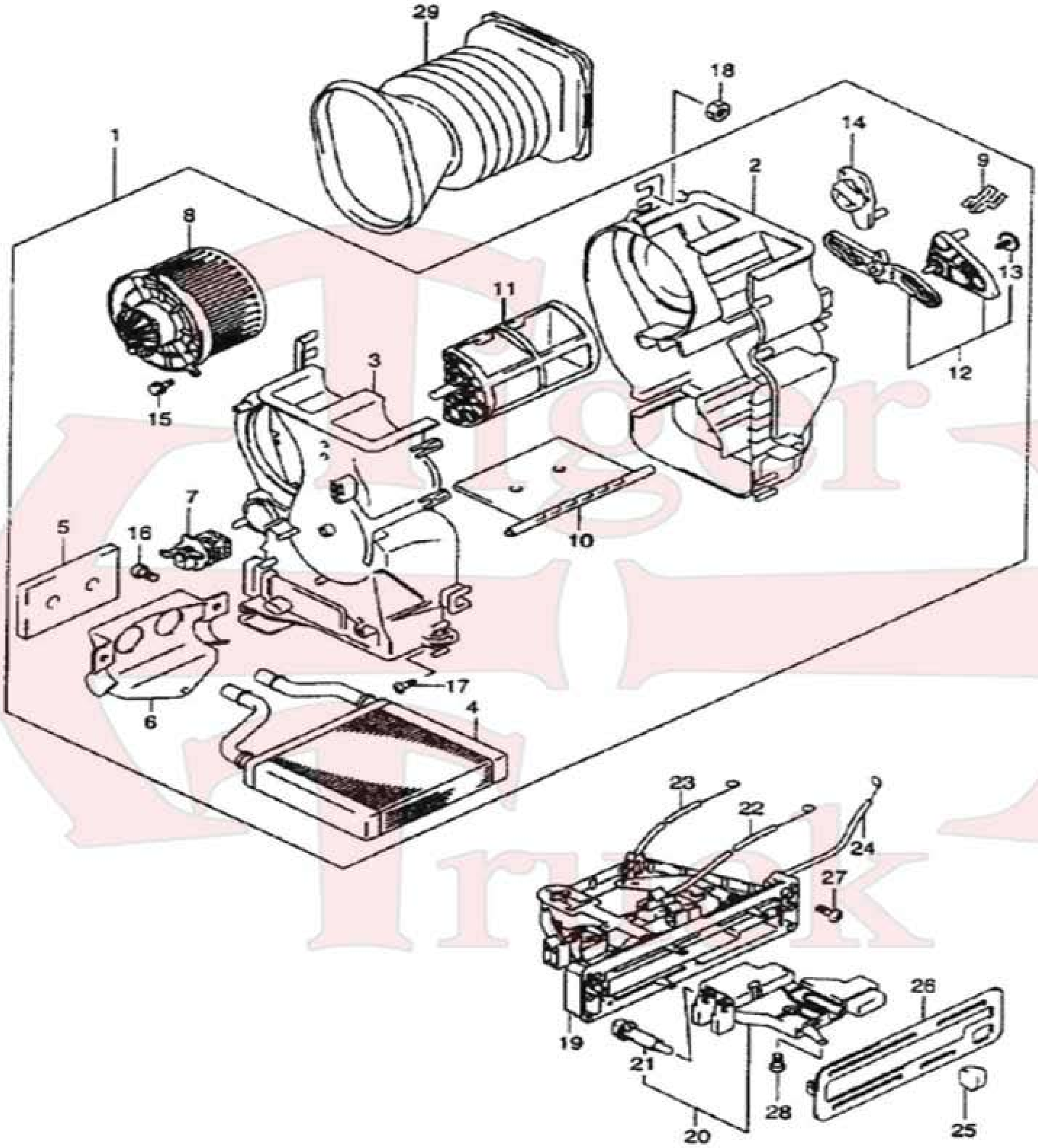

FIGURE 82 HEATER

NO	DESCRIPTION	PART NO.	ALL	SINGLE CAB	CREW CAB	NOTE
1	HEATER ASM	CK8101100N1	1			8101000-01
4	HEATER CORE	CK8101100N1-003	1			
7	FAN RESISTOR	CK8101100N1-006	1			
8	HEATER FAN W/MOTOR	CK8101100N1-007	1			
19	HEATER CONTROL LEVER	8112000-02	1			
20	HEATER CONTROL LEVER W/ CABLE	CK8112180N1	1			
22	FRESH AIR CONTROL CABLE	CK8112160N1	1			
23	DIRECTION CONTROL CABLE	CK8112150N1	1			
24	TEPERATURE CONTROL CABLE	CK8112170N1	1			
25	HEATER CONTROL HANDLE	CK8112110N1	4			
26	HEATER CONTROL PANEL	CK8112140N1	1			
29	VENT PIPE	CK8101400N1	1			

Tiger Truck

FIGURE 83 HEATER CONTROL VALVE

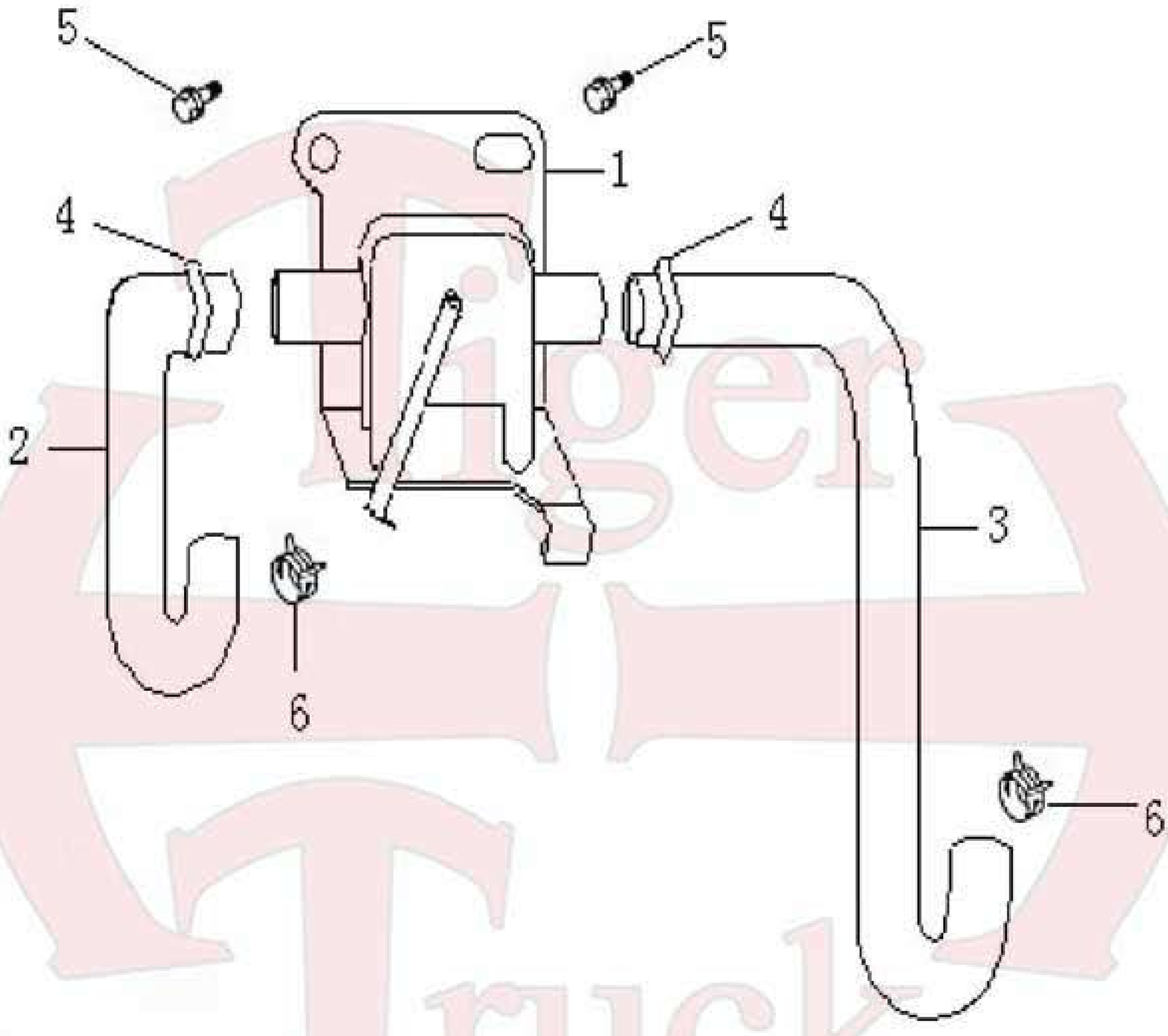

FIGURE 83 HEATER CONTROL VALVE

NO	DESCRIPTION	PART NO.	ALL	SINGLE CAB	CREW CAB	NOTE
1	HEATER CONTROL VALVE	CK1000100N4-130	1			8101020-01
2	HEATER CONTROL DRAIN PIPE		1			1312052-01
3	HEATER CONTROL INLET PIP		1			1312051-01
4	CLAMP	09400-25001	2			
5	BOLT	Q1400610	2			
6	CLAMP	09400-22401	2			

Tiger Truck

FIGURE 84 CARGO BED

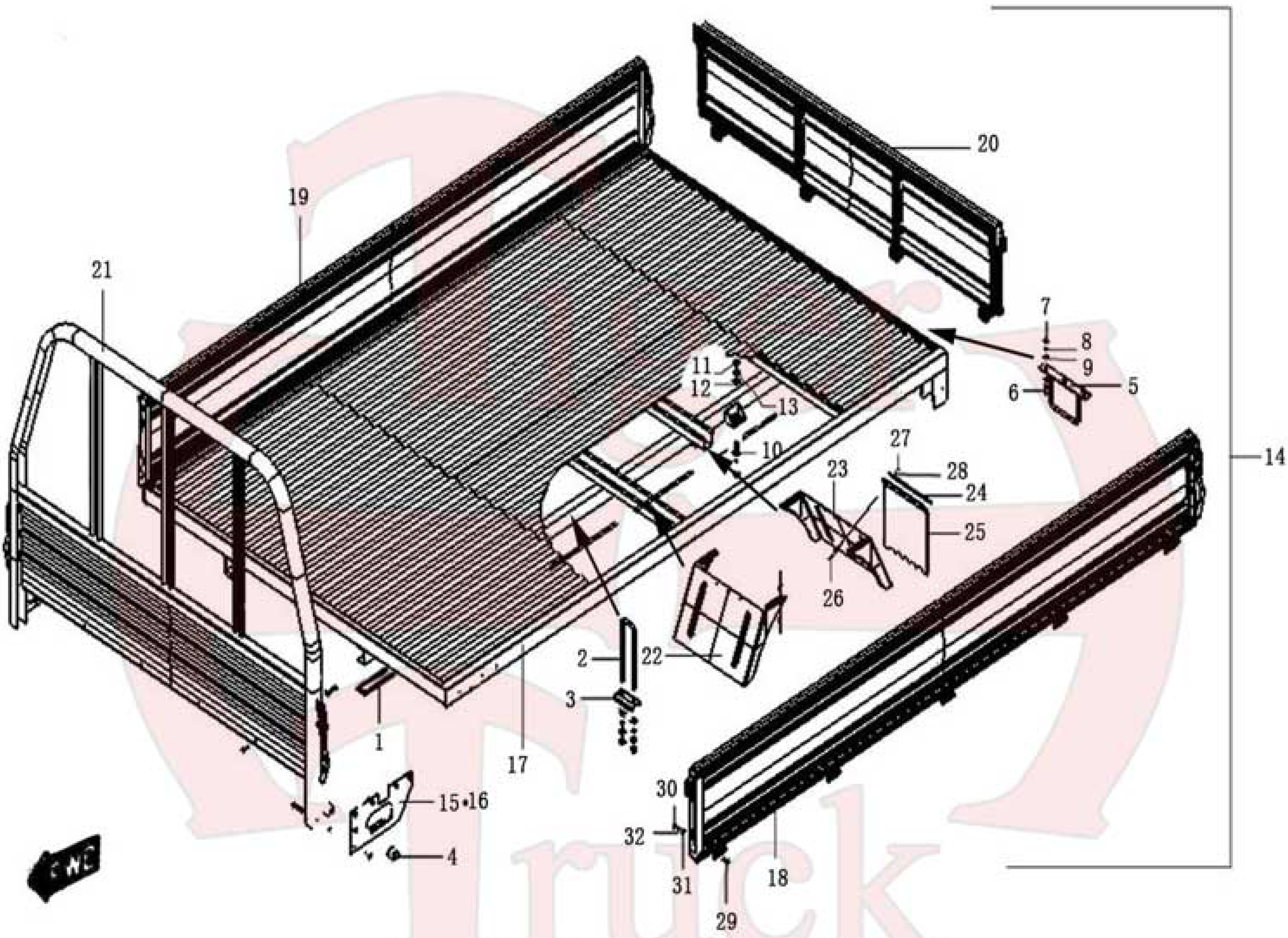

FIGURE 84 CARGO BED

NO	DESCRIPTION	PART NO.	ALL	SINGLE CAB	CREW CAB	NOTE
1	CARGO BODY WOODEN PAD	CK8500011N1		1		
		CK8500011N3			1	
2	U-BOLT	CK8500016N1	2			
3	BOLT CLAMP PLATE	CK8500017N1	2			
4	BUMPING BLOCK	CK8500020F1	6			
5	REAR TREADLE AMS	CK8500030N1	1			
6	BOLT	GB/T5781-2000	3			
7	NUT	GB/T41-2000	9			
8	WASHER	GB/T97.1-2002	9			
9	WASHER	GB/T93-1987	9			
10	BOLT	GB/T5783-2000	4			
11	NUT	GB/T6170-2000	16			
12	WASHER	GB/T97.1-2002	8			
13	WASHER	GB/T93-1987	4			
14	CARGO BODY ASM	CK8500100N1		1		
		CK8500100N3			1	
15	LEFT SIDE TREADLE	CK8500101N1	1			
16	RIGHT SIDE TREADLE	CK8500102N1	1			
17	MOTHER BOARD ASM	CK8501100N1		1		
		CK8501100N2			1	
18	LEFT PLATE	CK8502100N1		1		
		CK8502100N2			1	
19	RIGHT PLATE	CK8502200N1		1		
		CK8502200N2			1	
20	REAR PLATE	CK8503100N1	1			
21	FROTN PLATE	CK8504100N1	1			
22	FRONT MUD FLAP	CK8500012N1	2			
23	REAR MUD FLAP	TT-03	2			
24	FENDER APRON CLAMP PLATE	CK8500014N1	2			
25	FENDER APRON	CK8500015N1	2			
26	BOLT	GB/T5781-2000	8			
27	WASHER	GB/T97.1-2002	8			
28	WASHER	GB/T93-1987	8			
29	BOLT	GB/T5783-2000	33			

FIGURE 84 CARGO BED

NO	DESCRIPTION	PART NO.	ALL	SINGLE CAB	CREW CAB	NOTE
30	NUT	GB/T6170-2000	33			
31	WASHER	GB/T97.1-2002	33			
32	WASHER	GB/T93-1987	33			

Tiger Truck

FIGURE 85 ACCELERATOR CABLE

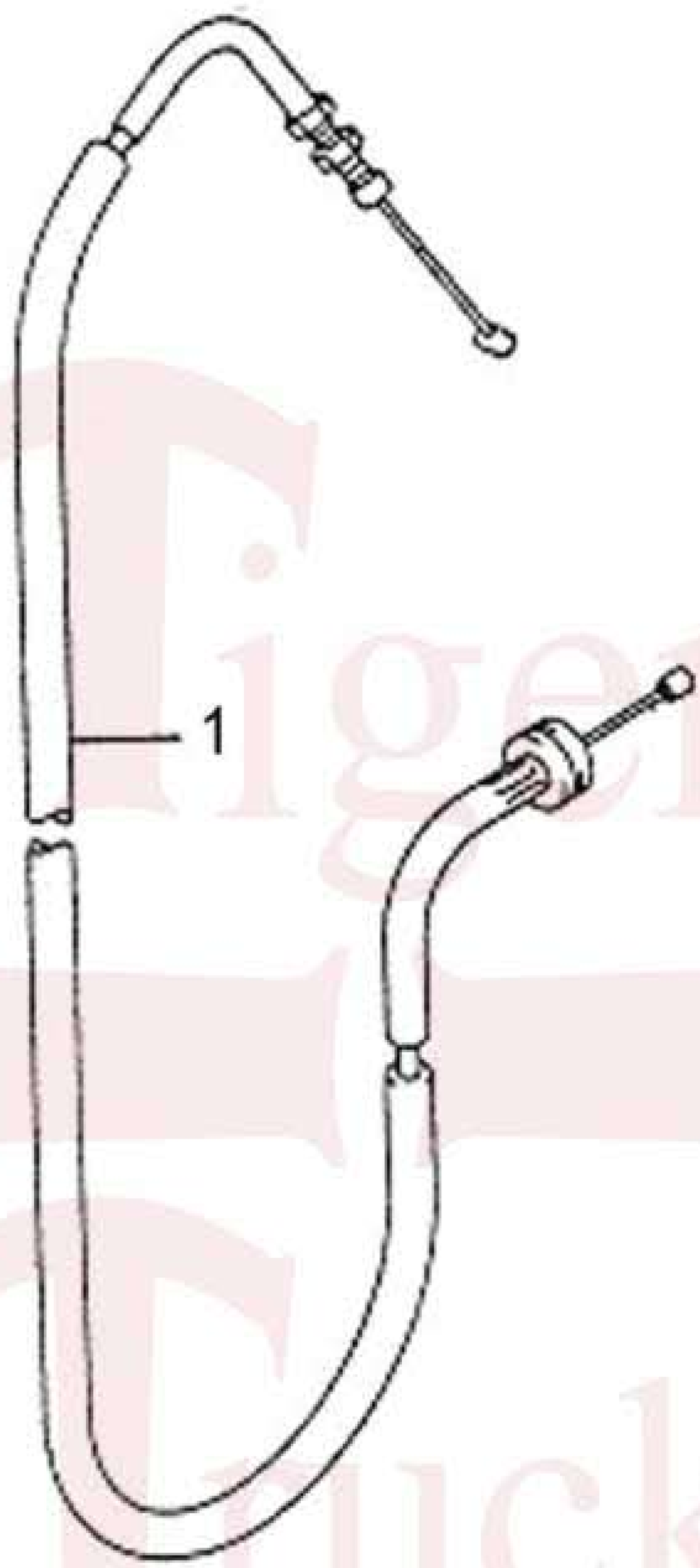

FIGURE 85 ACCELERATOR CABLE

NO	DESCRIPTION	PART NO.	ALL	SINGLE CAB	CREW CAB	NOTE
1	ACCELERATOR CABLE	CK1108300C1	1			1108030-05

Tiger Truck

FIGURE 86 FRONT BRAKE ASM

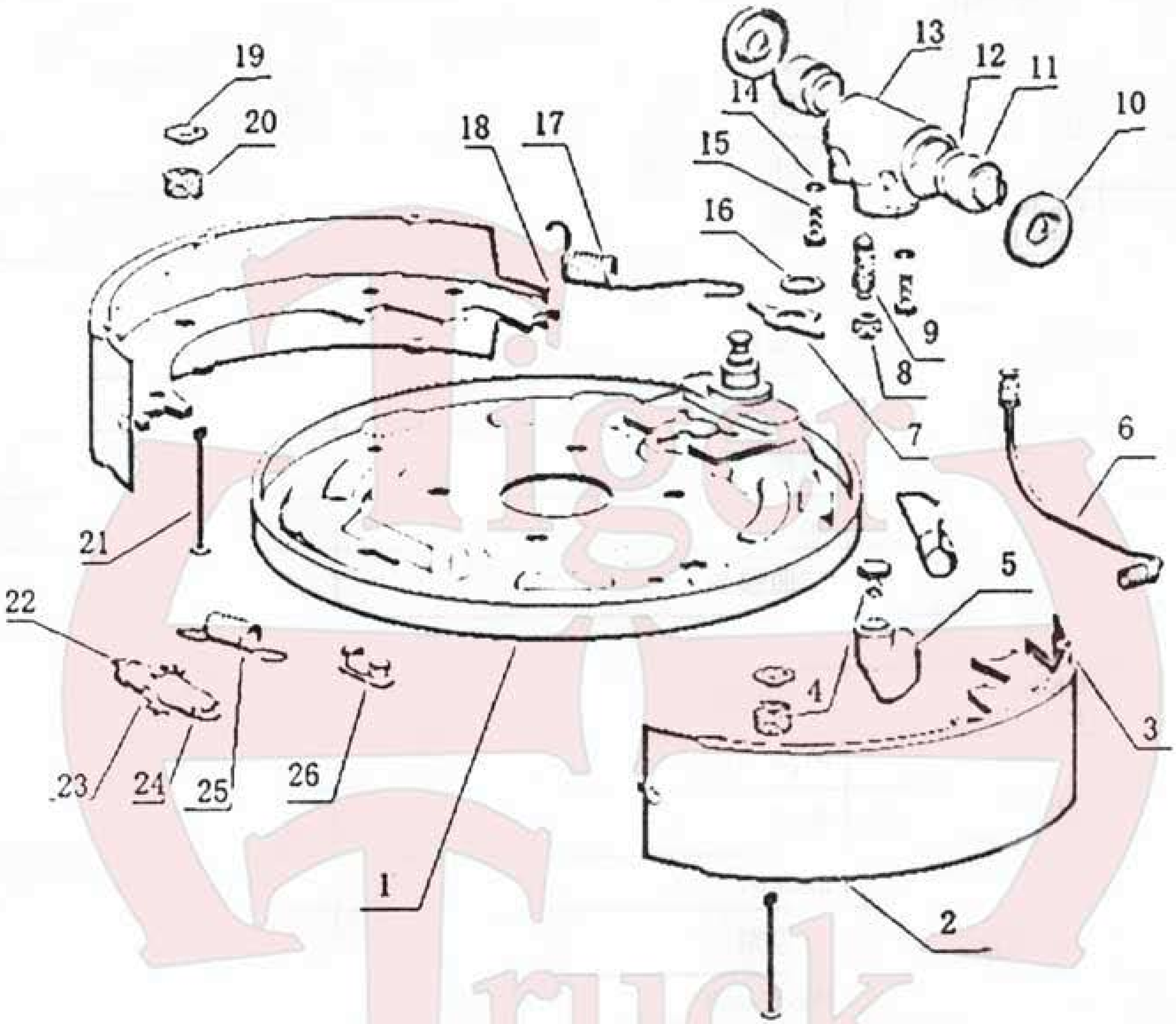

FIGURE 86 FRONT BRAKE ASM

NO	DESCRIPTION	PART NO.	ALL	SINGLE CAB	CREW CAB	NOTE
1	FRONT BOTTOM PLATE ASM LH	CK3000100N1-041	1			
2	BRAKE SHOE LEFT HAND	3501300KY	1			
	BRAKE SHOE RIGHT HAND	3501400KY	1			
3	PLATE II	CK3000100N1-043	2			
4	BOLT	CK3000100N1-044	1			
5	STRATI JOINT	CK3000100N1-045	1			
6	PIPE ASM	CK3000100N1-046	1			
7	GASKET	CK3000100N1-047	1			
8	DUST CAP	CK3000100N1-048	1			
9	BLEEDER VALVE	CK3000100N1-049	1			
10	BOOT SEAL	CK3000100N1-051	2			
11	PISTON	CK3000100N1-052	2			
12	SEAL CAP	CK3000100N1-053	2			
13	CYLINDER BLOCK	CK3000100N1-054	2			
14	WASHER	CK3000100N1-055	2			
15	BOLT	CK3000100N1-056	2			
16	WASHER	CK3000100B1-057	1			
17	RETURN SPRING	CK3000100B1-058	2			
18	PLATE	CK3000100N1-059	2			
19	SPRING SEAT	CK3000100B1-061	2			
20	PRESS SPRING II	CK3000100B1-062	2			
21	PRESS ROD	CK3000100N1-063	2			
22	ADJUSTMENT BOLT	CK3000100N1-064	1			
23	ADJUSTMENT NUT	CK3000100N1-065	1			
24	SUPPORTING SHAFT	CK3000100N1-066	1			
25	BRAKE SHOE CLEARANCE ADJUSTMENT SPRING	CK3000100N1-067	1			
26	PLUG	CK3000100N1-068	1			

FIGURE 87 REAR BRAKE ASM

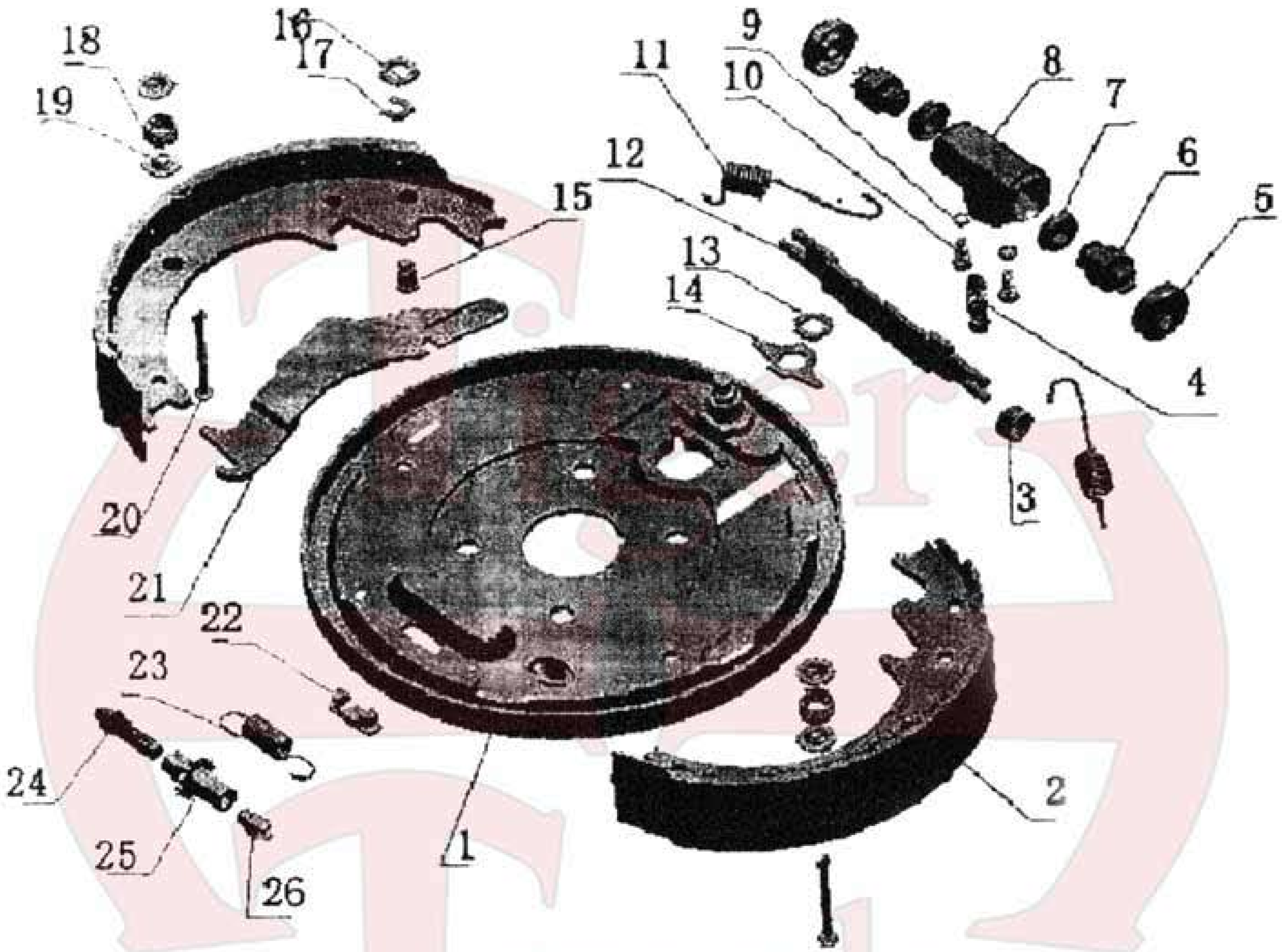

FIGURE 87 REAR BRAKE ASM

NO	DESCRIPTION	PART NO.	ALL	SINGLE CAB	CREW CAB	NOTE
1	REAR BOTTOM PLATE ASM	CK2400001N1-061	1			
2	BRAKE SHOE LEFT HAND	3501300KY	1			
	BRAKE SHOE RIGHT HAND	3501400KY	1			
3	PRESS SPRING	CK2400001N1-063	1			
4	EXHAUST BOLT	CK2400001N1-064	1			
5	RUBBER SEAL	CK2400001N1-065	2			
6	PISTON	CK2400001N1-066	2			
7	PISTON SEAL	CK2400001N1-067	2			
8	BRAKE CYLINDER BODY	CK2400001N1-068	1			
9	WASHER	CK2400001N1-069	2			
10	BOLT M6-14	CK2400001N1-071	2			
11	RETURN SPRING	CK2400001N1-072	2			
12	PUSH ROD	CK2400001N1-073	1			
13	WASHER	CK2400001N1-074	1			
14	WASHER	CK2400001N1-075	1			
15	ROLL PIN	CK2400001N1-076	1			
16	WASHER	CK2400001N1-077	1			
17	CLIP	CK2400001N1-078	1			
18	PRESS SPRING	CK2400001N1-079	1			
19	SPRING SEAT	CK2400001N1-082	4			
20	PRESS ROD	CK2400001N1-082	2			
21	DRAG ROD	CK2400001N1-082	1			
22	PLUG	CK2400001N1-084	1			
23	ADJUSTMEMT SPRING	CK2400001N1-085	1			
24	ADJUSTMENT BOLT	CK2400001N1-086	1			
25	ADJUSTMENT NUT	CK2400001N1-087	1			
26	SUPPORT SHAFT	CK2400001N1-088	1			

FIGURE 88 AUTOMATIC TRANSMISSION

NO	DESCRIPTION	PART NO.	ALL	SINGLE CAB	CREW CAB	NOTE
N/L	AUTOMATIC TRANSMISSION	28-3001	1			
N/L	SHIFTER CABLE	SC63311703300-55	1			
N/L	GEAR REDUCTION BOX	28-08880	1			
N/L	SPEEDOMETER CABLE	28-00101A	1			
N/L	SPEEDOMETER CABLE ASSY	28-00101D				
N/L	AUTOMATIC SHIFTER	TT-500C	1			
N/L	SHIFTER PLATE	TT-478	1			
N/L	DIPSTICK & TUBE ASM	28-34778	1			
N/L	STARTER	28-78278R	1			
N/L	FLYWHEEL	28-35900	1			
N/L	TRANSMISSION OIL PAN	28-10000	1			
	INPUT SHAFT	28-U26411A	1			
	TORQUE CONVERTER	28-86778R600	1			
	MODULATOR	28-26833W	1			
	BUSHING KIT	28-K26905A	1			
	FILTER (C5)	28-26422G	1			
	FILTER (C4 LATE - DEEP PAN)	28-26422C	1			
	FLEX BAND (C4)	28-A26320F	1			
	NEUTRAL SAFETY SWITCH	28-00942	1			
	MASTER OVERHAUL KIT (C5)	28-DK2601C	1			
	MASTER OVERHAUL KIT (C4)	28-DK2600C	1			
	BELL HOUSING	28-TT-0105	1			
	GEAR SHIFT PLATE	TT-478	1			

FIGURE 89 FLEX FUEL SYSTEM

NO	DESCRIPTION	PART NO.	ALL	SINGLE CAB	CREW CAB	NOTE
	FUEL TANK (FLEX FUEL)	6-1003	1	X	X	
	TRAY - BOTTOM	6-TT-0001	1			
	LID - TOP	6-TT-0002	1			
	STRIP HEATER	6-SB289	1			
	TIMER	6-934135	1			
	SPARK PLUG	R45XLS	4			
	FUEL TANK HARNESS	CK4010410N1	1			
	FUEL SUPPLY PUMP FLANGE	CK1101-013N1	1			
	FUEL PUMP AND SENSOR ASSEMBLY	CK3700-470N1	1			
	FLANGE, INNER SEAL PLATE	6-TT-0100	1			
	FLANGE, OUTER SEAL PLATE	6-TT-0101	2			
	GASKET SEAL LID	6-TT-0097	1			
	FUEL PUMP FLANGE	6-TT-003	1			
	GASKET SEAL FLANGE	6-TT-0096	1			

Tiger Truck