https://truckmanualshub.com/

Crawler crane

LR 1300.1 SX

Complies with ANSI/ASME B 30.5

EN-US

LR 1006.02.07

LIEBHERR

https://truckmanualshub.com/

Concept and characteristics

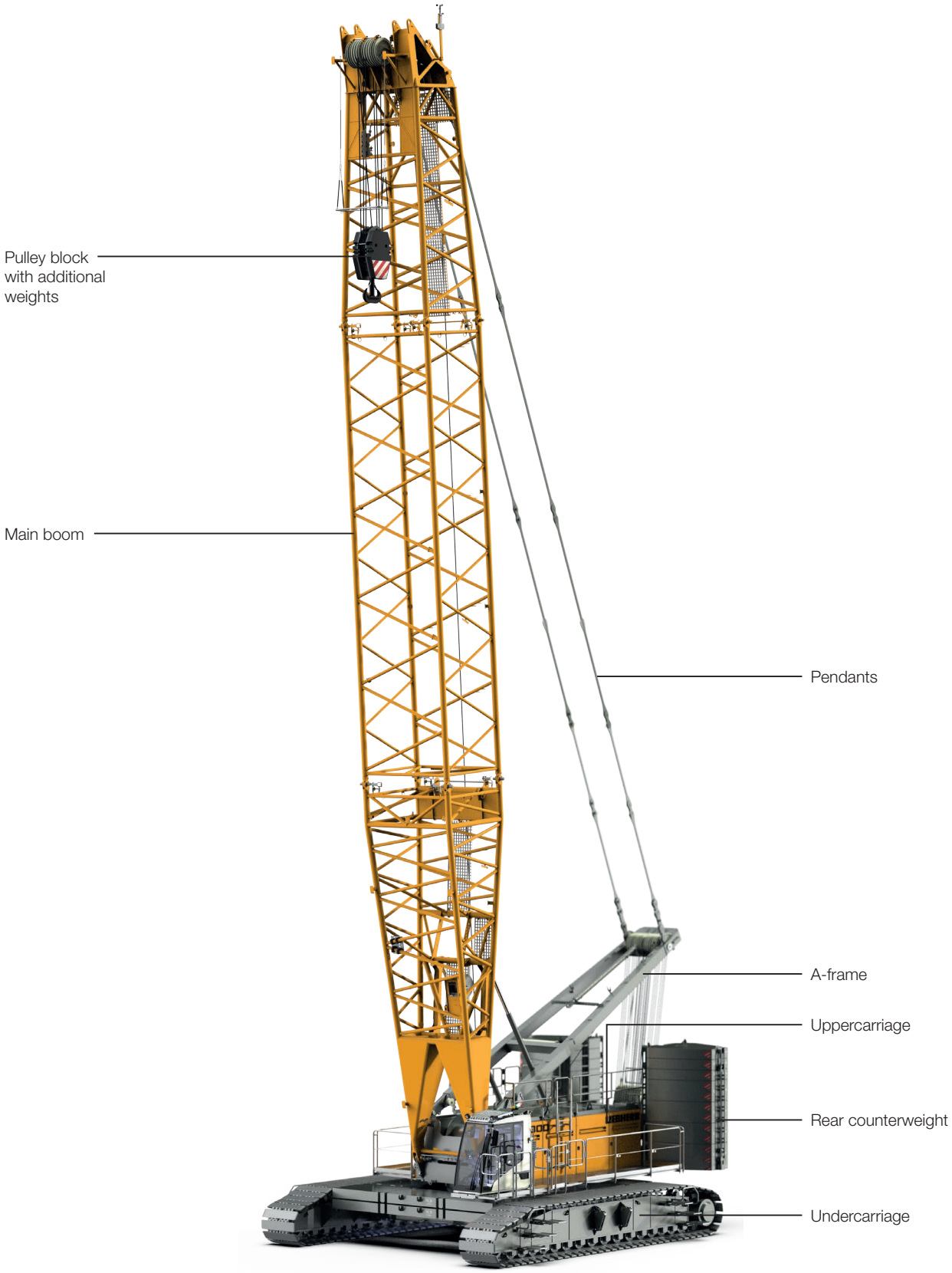

https://truckmanualshub.com/

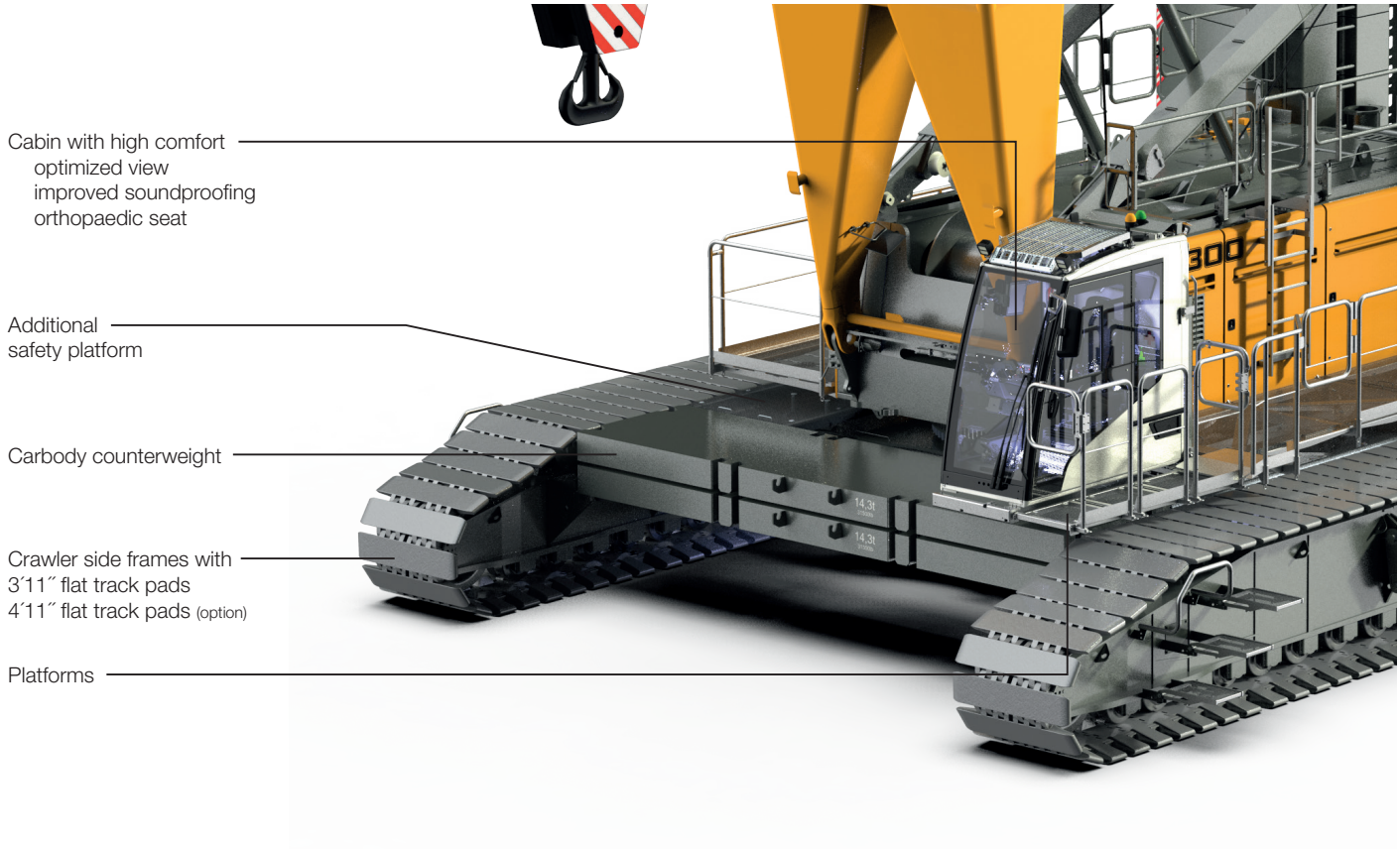

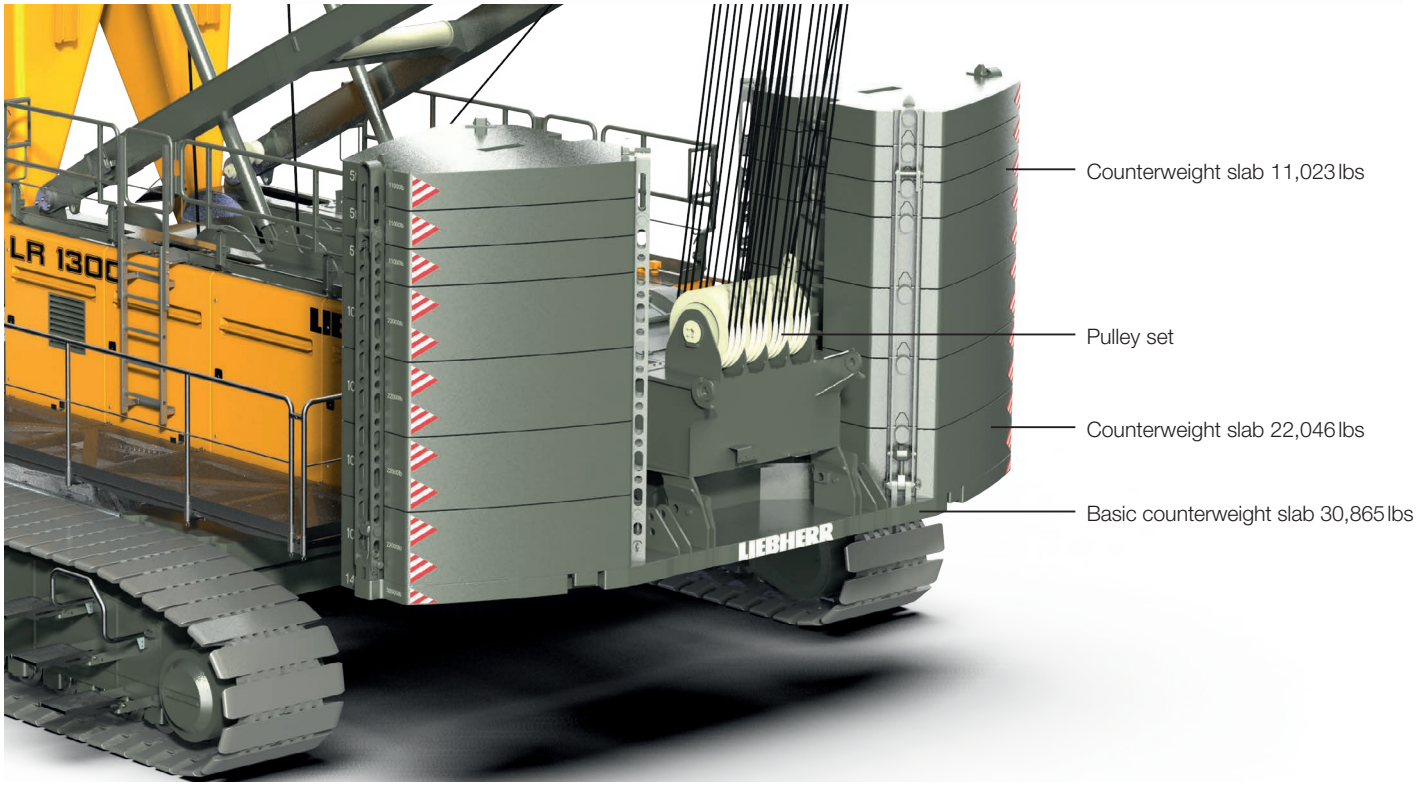

https://truckmanualshub.com/

Dimensions

Standard

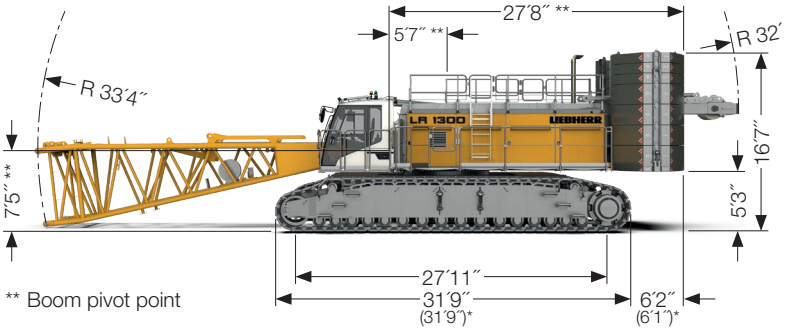

** Boom pivot point

* Option: crawler side frames with 4´11´´ flat track pads

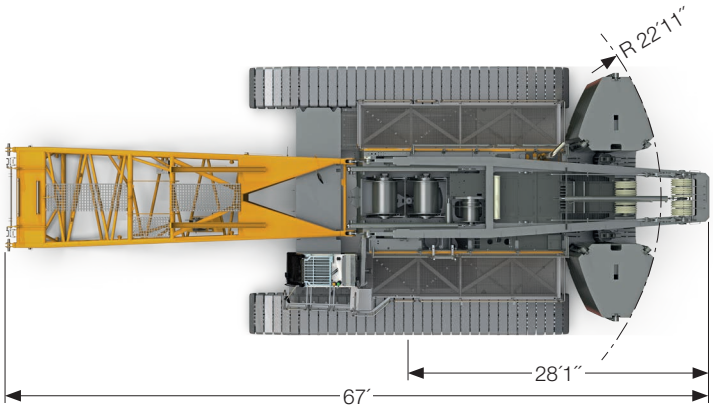

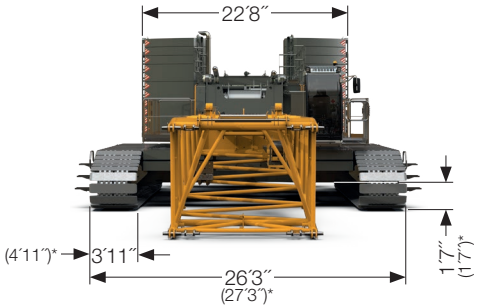

Operating weight

The operating weight includes the basic machine with crawler side frames, winches 1+2 (2x 33,721 lbf) incl. 2 hoist ropes (2x 787 ft) and 66 ft main boom, consisting of A-frame, boom foot (33 ft), boom head (23 ft), boom section (10 ft), 273,373 lbs rear counterweight, 125,663 lbs carbody counterweight and 661,300 lbs pulley block.

Total weight	approx. 639,341 lbs

Ground pressure

The actual ground pressure is calculated according to the configuration and position of the machine and displayed in the operator's cabin. Using the optional Liebherr Crane Planner the actual ground pressure can already be calculated and displayed in the planning stage.

Equipment

Main boom (No. 2821.xx)	66-302 ft
Fixed jib (No. 0906.21)	23 ft
Fixed jib (No. 1507.20)	26 ft
Fixed jib (No. 1008.xx)	36-85 ft
Fixed jib (No. 1713.xx)	46-115 ft
Luffing jib (No. 1916.xx)	66-312 ft
Max. boom combination (main boom 213 ft + luffing jib 312 ft)	525 ft
Luffing jib (No. 2316.xx)	66-370 ft
Max. boom combination (main boom 184 ft + luffing jib 370 ft)	554 ft
Auxiliary jib for main boom (No. 2821.xx)	79,370 lbs
Auxiliary jib for luffing jib (No. 1916.xx)	33,070 lbs
Auxiliary jib for luffing jib (No. 2316.xx)	66,140/99,210 lbs

Remarks

1. The lifting capacities stated are valid for lifting operation only (corresponding with crane classification according to ISO 4301-1, crane group A1).
2. Crane standing on firm, horizontal ground.
3. The weight of the lifting device (pulley block, hoist ropes, shackle etc.) must be deducted from the gross lifting capacity to obtain a net lifting value.
4. Additional equipment on boom (e.g. platforms) must be deducted from the load capacity.
5. The max. admissible wind speed can be preselected in the LML software and is shown in the load chart.
6. Working radii are measured from centre of swing and under load.
7. The lifting capacities are valid for 360 degrees of swing.
8. Calculation of stability under load is based on ANSI/ASME B 30.5 load ratings as well as ISO 4305 Table 2 and tested according to SAE J765 and SAE J987.
9. Weights may vary depending on the delivered configuration of the machine, filling level of the tanks as well as generally valid tolerances.
10. The figures in this brochure may include options which are not within the standard scope of supply of the machine.

https://truckmanualshub.com/

Undercarriage with adjustable track width – 3´11´´ flat track pads (option)

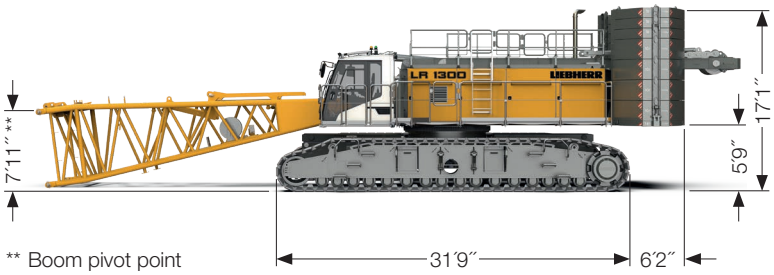

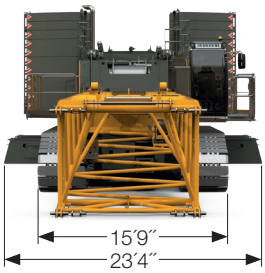

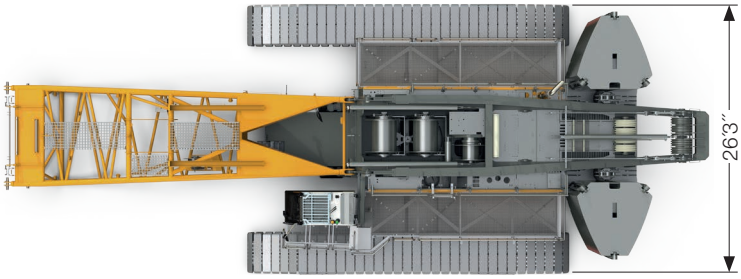

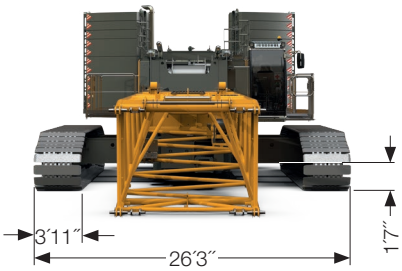

Undercarriage with adjustable track width – 4´11´´ flat track pads (option)

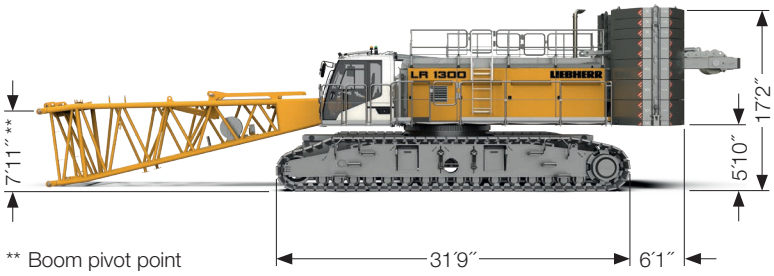

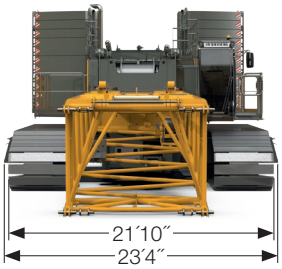

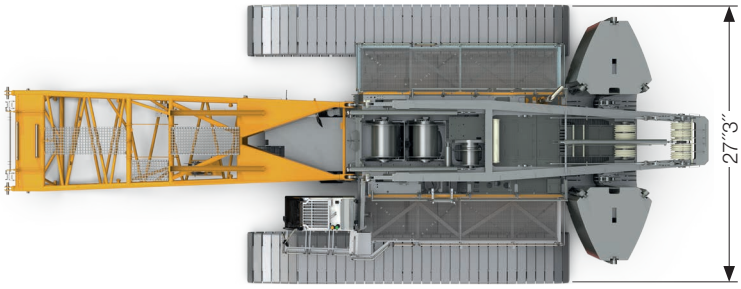

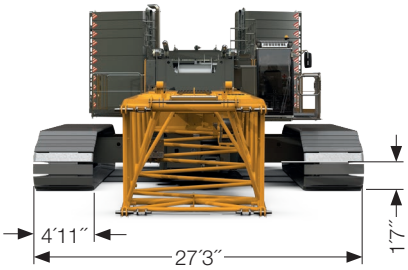

https://truckmanualshub.com/

Transport dimensions and weights

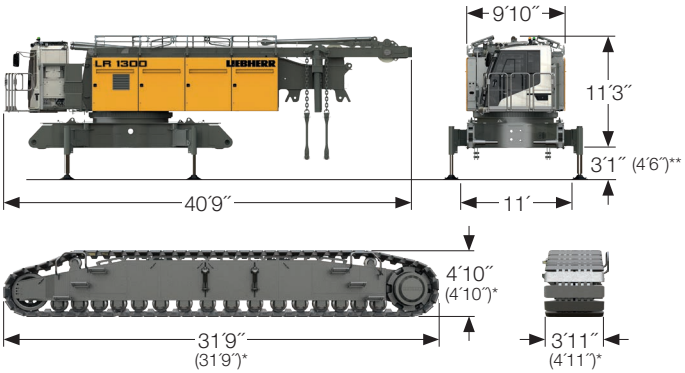

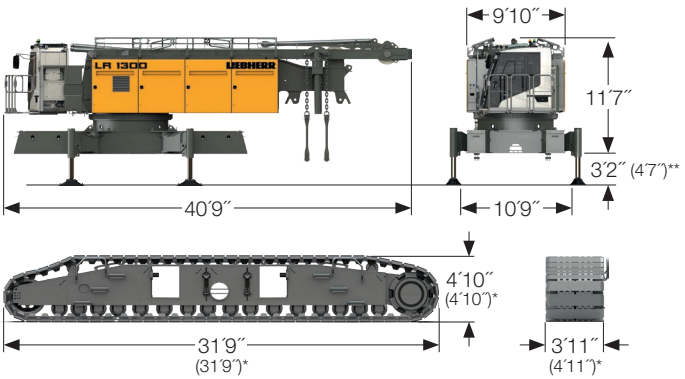

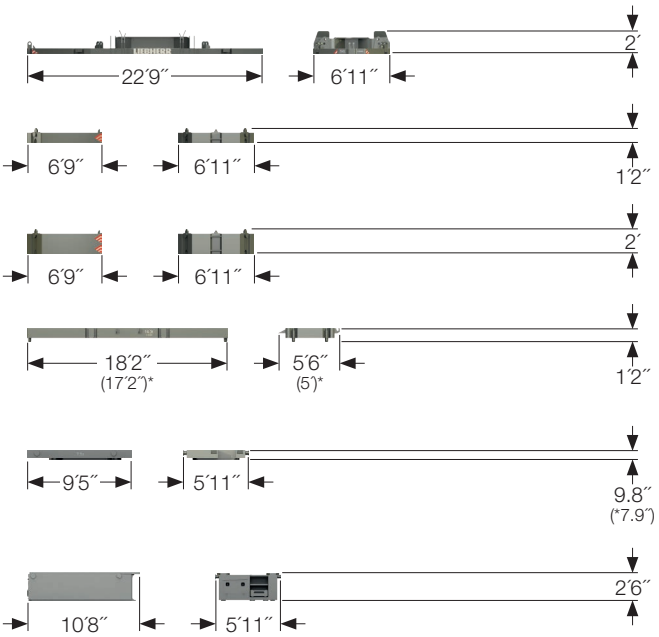

Basic machine

Basic machine

with A-frame 1, winches 1+ 2 (2x 33,721 lbf), without boom foot, without rear counterweight, without carbody counterweight and crawler side frames	
Weight without hoist rope	101,413 lbs
Weight of hoist rope	2.82 lbs/ft

Crawler side frame — 2x

	Standard	Option
Flat track pads	3´11´´	4´11´´
Weight	49,273 lbs	57,761 lbs

Basic machine with adjustable track width (option)

with A-frame, winches 1 + 2 (2x 33,721 lbf), without boom foot, without rear counterweight, without carbody counterweight and crawler side frames	
Weight without hoist rope	102,515 lbs
Weight of hoist rope	2.82 lbs/ft

Crawler side frame adjustable (option) — 2x

	Standard	Option
Flat track pads	3´11´´	4´11´´
Weight	50,706 lbs	59,194 lbs

Counterweight

Basic counterweight slab without tie-down — 1x

Weight	30,865 lbs

Counterweight slab — 6x

Weight	11,023 lbs

Counterweight slab — 8x

Weight	22,046 lbs

Carbody counterweight (for undercarriage with fixed track width) — 4x

	Standard	Option*
Weight	31,526 lbs	29,542 lbs

Carbody counterweight (for undercarriage with adjustable track width) — 2x

	Standard	Option*
Weight	16,535 lbs	12,236 lbs

Carbody counterweight (for undercarriage with adjustable track width) — 2x

Weight	41,447 lbs

* Option: crawler side frames with 4´11´´ flat track pads
** Option: telescopic jack-up cylinders

https://truckmanualshub.com/

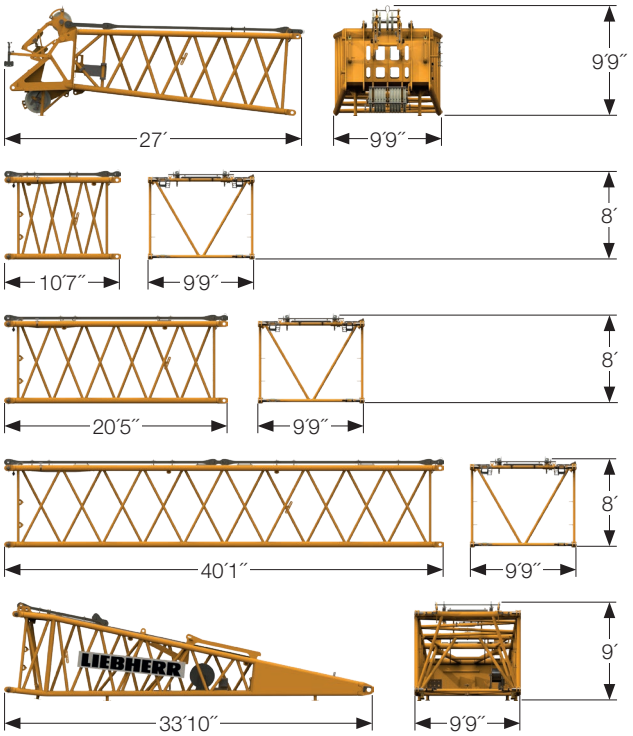

Main boom (No. 2821.xx)

Boom head (No. 2821.24)	**23 ft**
Weight incl. boom pendants	11,905 lbs

Boom section (No. 2821.30)	**10 ft**
Weight incl. boom pendants	3,086 lbs
Weight incl. boom and jib pendants	3,307 lbs

Boom section (No. 2821.30)	**20 ft**
Weight incl. boom pendants	4,696 lbs
Weight incl. boom and jib pendants	5,093 lbs

Boom section (No. 2821.30)	**40 ft**
Weight incl. boom pendants	8,289 lbs
Weight incl. boom and jib pendants	9,083 lbs

Boom foot (No. 2821.30)	**33 ft**
Weight incl. winch with rope	16,314 lbs
Weight without winch	12,566 lbs

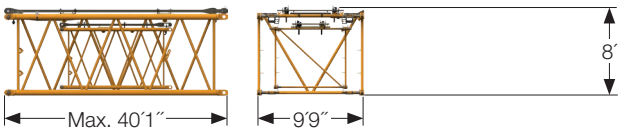

Transport option

Transport option (No. 2821.xx/2316.xx)			
10 ft main boom and jib section			
20 ft main boom and jib section			
40 ft main boom and jib section			
	10/10 ft	20/20 ft	40/40 ft
Weight incl. pendants	4,630 lbs	7,187 lbs	13,051 lbs

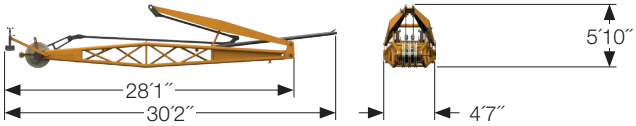

Fixed jib (No. 0906.21)

Fixed jib (No. 0906.21)	**23 ft**
Weight incl. pendants	5,291 lbs

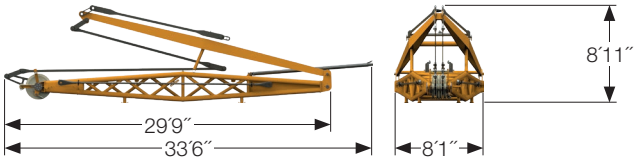

Fixed jib (No. 1507.20)

Fixed jib (No. 1507.20)	**26 ft**
Weight incl. pendants	7,275 lbs

https://truckmanualshub.com/

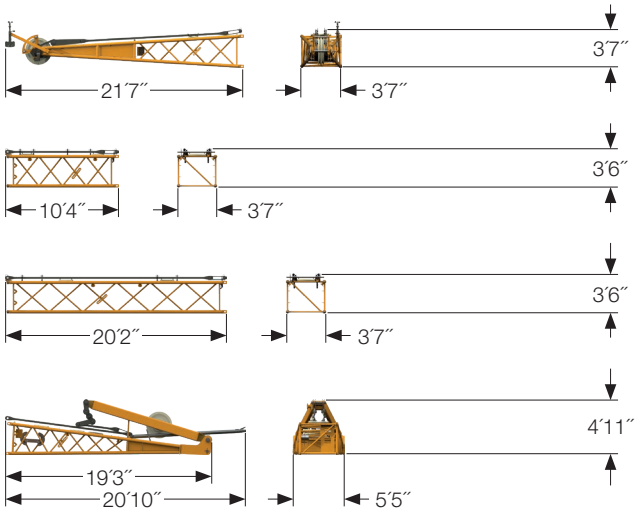

Fixed jib (No. 1008.xx)

Jib head (No. 1008.20)	**18 ft**
Weight incl. pendants	2,028 lbs
Jib section (No. 1008.17)	**10 ft**
Weight incl. pendants	661 lbs
Jib section (No. 1008.17)	**20 ft**
Weight incl. pendants	1,389 lbs
Jib foot with A-frame (No. 1008.20)	**18 ft**
Weight incl. pendants	4,299 lbs

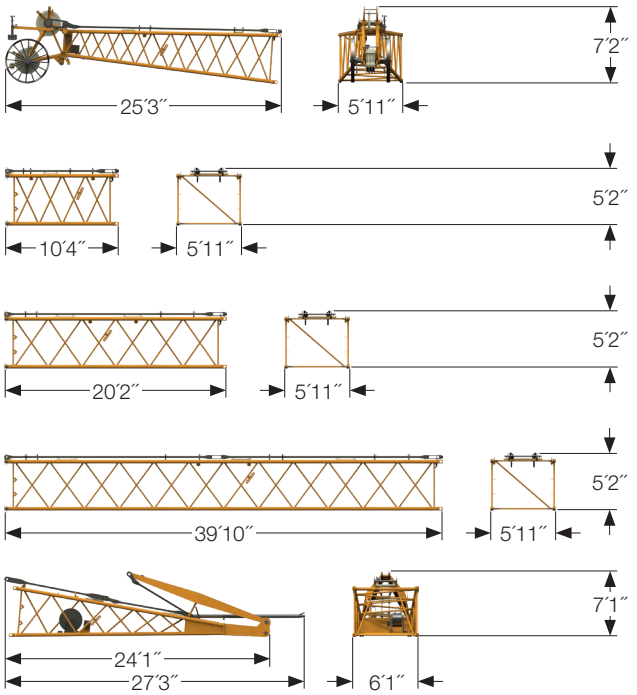

Fixed jib (No. 1713.xx)

Jib head (No. 1713.21)	**23 ft**
Weight incl. pendants	3,031 lbs
Jib section (No. 1713.18)	**10 ft**
Weight incl. pendants	926 lbs
Jib section (No. 1713.18)	**20 ft**
Weight incl. pendants	1,389 lbs
Jib section (No. 1713.18)	**40 ft**
Weight incl. pendants	2,513 lbs
Jib foot with A-frame (No. 1713.22)	**23 ft**
Weight incl. pendants	10,185 lbs

https://truckmanualshub.com/

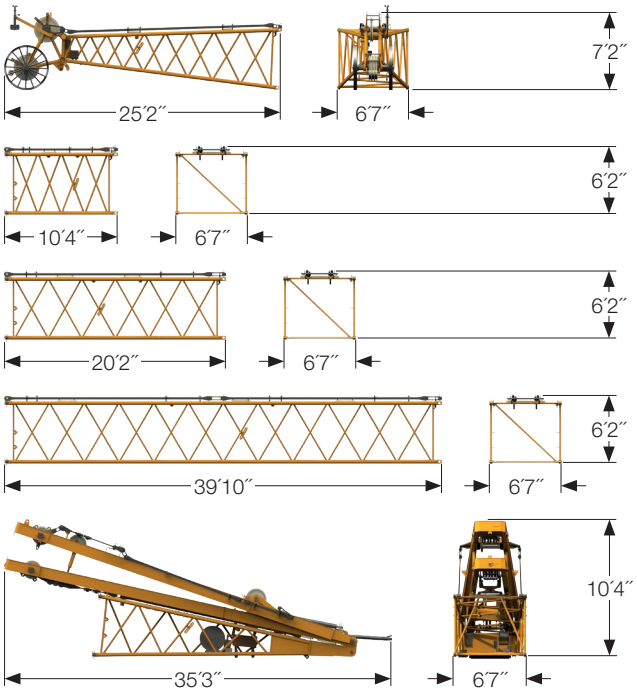

Luffing jib (No. 1916.xx)

Jib head (No. 1916.21)	**23 ft**
Weight incl. pendants	3,417 lbs
Jib section (No. 1916.18)	**10 ft**
Weight incl. pendants	1,047 lbs
Jib section (No. 1916.18)	**20 ft**
Weight incl. pendants	1,521 lbs
Jib section (No. 1916.18)	**40 ft**
Weight incl. pendants	2,756 lbs
Jib foot with A-frames 2 + 3 (No. 1916.22)	**23 ft**
Weight incl. pendants	13,889 lbs

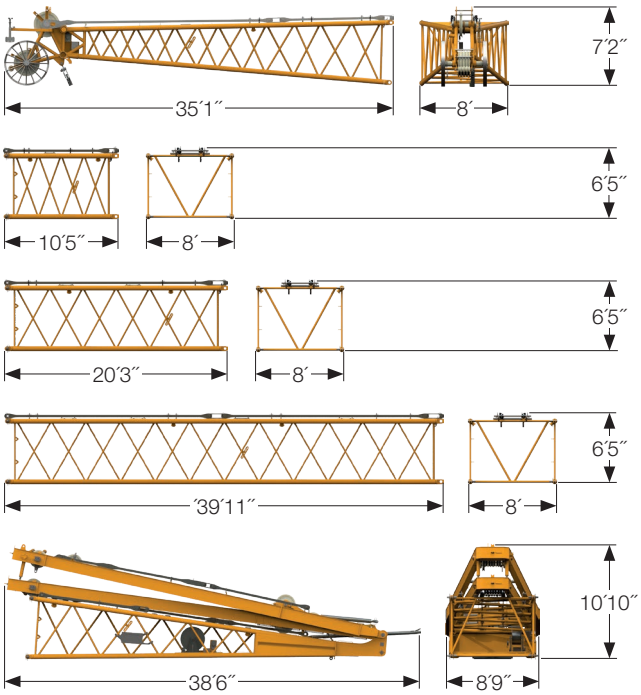

Luffing jib (No. 2316.xx)

Jib head (No. 2316.20)	**33 ft**
Weight incl. pendants	5,071 lbs
Jib section (No. 2316.20)	**10 ft**
Weight incl. pendants	1,323 lbs
Jib section (No. 2316.20)	**20 ft**
Weight incl. pendants	2,094 lbs
Jib section (No. 2316.20)	**40 ft**
Weight incl. pendants	3,968 lbs
Jib foot with A-frames 2 + 3 (No. 2316.22)	**33 ft**
Weight incl. pendants	17,769 lbs

https://truckmanualshub.com/

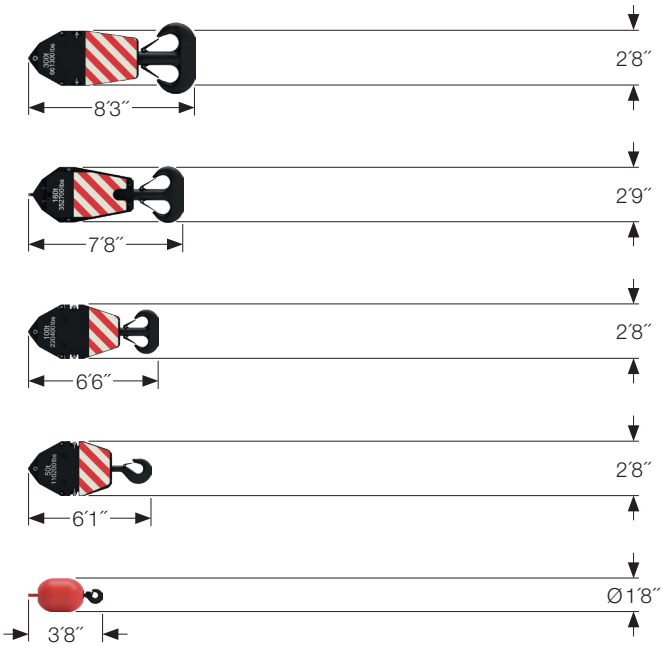

Pulley block with additional weights / load hooks

661,300 lbs pulley block – 11 pulleys

Width	4´
Weight	7,055/12,125 lbs

352,700 lbs pulley block – 5 pulleys

Width	3´
Weight	3,527/6,173/8,818 lbs

220,400 lbs pulley block – 3 pulleys

Width	2´1´´
Weight	2,425/4,519/6,614 lbs

110,200 lbs pulley block – 1 pulley

Width	1´9´´ mm
Weight	1,764/3,527/5,291 lbs

27,560 lbs load hook

Weight	1,984 lbs

https://truckmanualshub.com/

Technical description

Diesel engine

Power rating according to ISO 9249, 390 kW (523 hp) at 1700 rpm
Engine type — Liebherr D 946 A7-04
Fuel tank — 198 gal capacity with continuous level indicator and reserve warning
Engine complies with NRMM exhaust certification EPACARB Tier 4f and 97/68 EC Stage IV.

Hydraulic system

A double axial displacement pump supplies the main boom and luffing jib winch and the crawlers in open circuits. Winches 1 + 2 and the swing gear work in closed circuits. All movements can be performed simultaneously. To minimize peak pressure an automatic working pressure cut–off is integrated in the pump. All filters are electronically monitored. The use of synthetic environmentally friendly oil is also possible. Furthermore, an emergency operation mode is installed.

Working pressure — max. 5,076 PSI
Hydraulic oil tank capacity — 172 gal

Luffing jib winch

Line pull — max. 23,605 lbf
Rope diameter — 20 mm
Jib luffing — 69 sec. from 15° to 78°

Boom winch

Line pull — max. 48,784 lbf
Rope diameter — 24 mm
Boom up — 127 sec. from 15° to 86°

Crawlers

Propulsion through axial piston motor, hydraulically released spring loaded multi-disc brake, crawler tracks, hydraulic chain tensioning device.

Flat track pads — 3´11´´ (option 4´11´)
Drive speed — 0-0.764 mph

Swing gear

Consists of rollerbearing with external teeth, swing gear with fixed axial piston hydraulic motor, spring loaded and hydraulically released multi-disc holding brake, planetary gearbox and pinion. Both swing modes are possible – speed control or free swing. A multi-disc holding brake acts automatically at zero swing motion.
Swing speed from 0-1.8 rpm continuously variable.

Hoisting gear

Standard crane winches 1 + 2
Line pull in the 1st layer — max. 48,334 lbf
Line pull in the 7th layer — 33,721 lbf
Rope diameter — 28 mm
Drum diameter — 2.4 ft
Rope speed — 0-372 ft/min
Rope capacity in 7 layers — 1870 ft

The winches are outstanding in their compact design and easy assembly. Propulsion is via a planetary gearbox in an oil bath. Load support by the hydraulic system; additional safety factor by a spring-loaded, multi-disc holding brake. The main winches use pressure controlled, variable flow hydraulic motors. This system features sensors that automatically adjust oil flow to provide max. winch speed depending on load.

Optional free-fall winches:
Line pull in the 1st layer (crane operation) — max. 42,714 lbf
Line pull in the 7th layer (crane operation) — 29,225 lbf
Line pull in the 1st layer (free-fall operation) — max. 38,218 lbf
Line pull in the 7th layer (free-fall operation) — 26,527 lbf
Rope diameter — 28 mm
Drum diameter — 2.4 ft
Rope speed — 0-427 ft/min
Rope capacity in 7 layers — 1870 ft

The winches are outstanding in their compact design and easy assembly. Clutch and braking functions on the free-fall system are provided by a compact designed, low wear and maintenance-free multi-disc brake.

Control

The heart of the hydraulic crawler cranes is the Liebherr control system which has been developed and manufactured in-house. It includes all control and monitoring functions and is designed to withstand extreme environmental conditions and heavy duty construction tasks. Complete machine operating data as well as warning signals and irregularities are clearly displayed on the monitor in the operator's cabin in the required language. The electro-hydraulic proportional control allows several movements to be performed simultaneously and precisely. Moreover, the power cut-off depends on the preselected and expected wind speed and the preselected drive speed level. The operating mode "Lifting" is supplied as a standard. As an option operating modes such as grab operation, personnel lifting, foundation work according to EN 16228 (e.g. vibrator and leader operation) and barge charts can be enabled in the software. The display of ground pressure and centre of gravity is another option.

Noise measurement data and vibration

Noise emissions correspond with 2000/14/EC directive.
Emission sound pressure level L_{PA} in the cabin — 71.1 dB(A)
Guaranteed sound power level L_{WA} — 110 dB(A)
Vibration transmitted to the hand-arm system of the machine operator — < 8.20 ft/s²
Vibration transmitted to the whole body of the machine operator — < 1.64 ft/s²

https://truckmanualshub.com/

Boom combinations

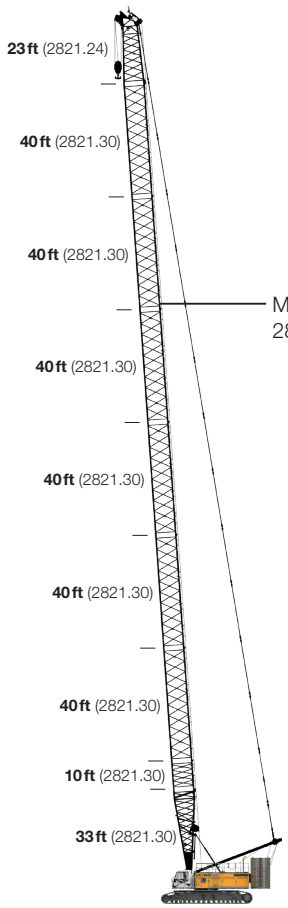

Main boom	302 ft

Further information on page 16.

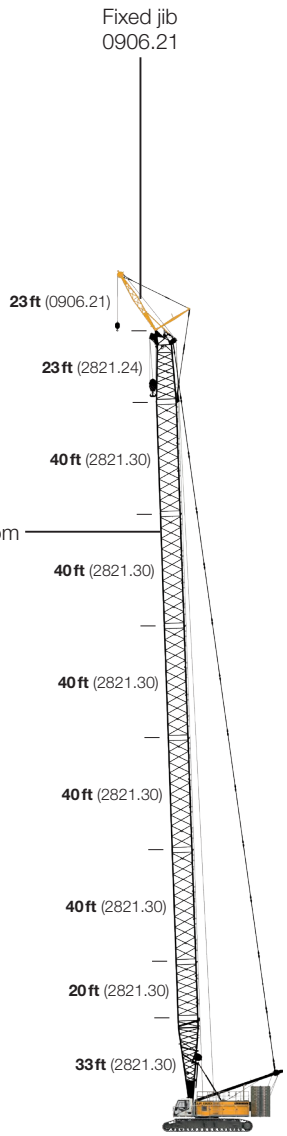

Max. combination	295 ft
Main boom	272 ft
Fixed jib	23 ft

Further information on page 18.

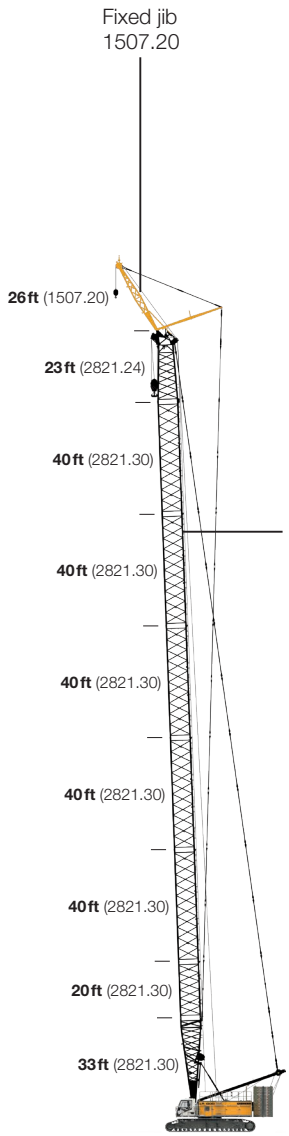

Max. combination	298 ft
Main boom	272 ft
Fixed jib	26 ft

Further information on page 20.

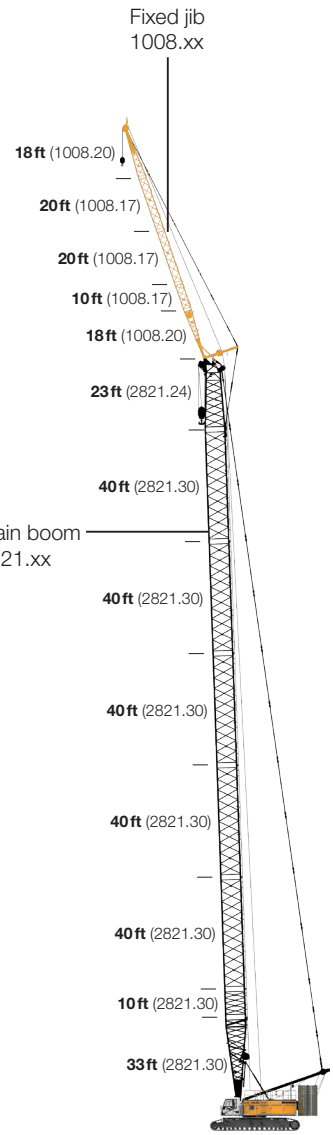

Max. combination	348 ft
Main boom	263 ft
Fixed jib	85 ft

Further information on page 22.

https://truckmanualshub.com/

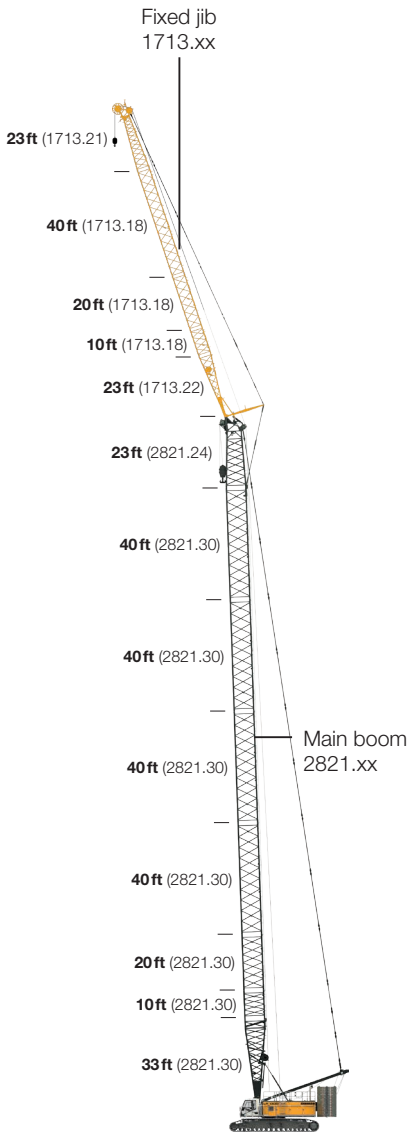

Max. combination	358 ft
Main boom	243 ft
Fixed jib	115 ft

Further information on page 25.

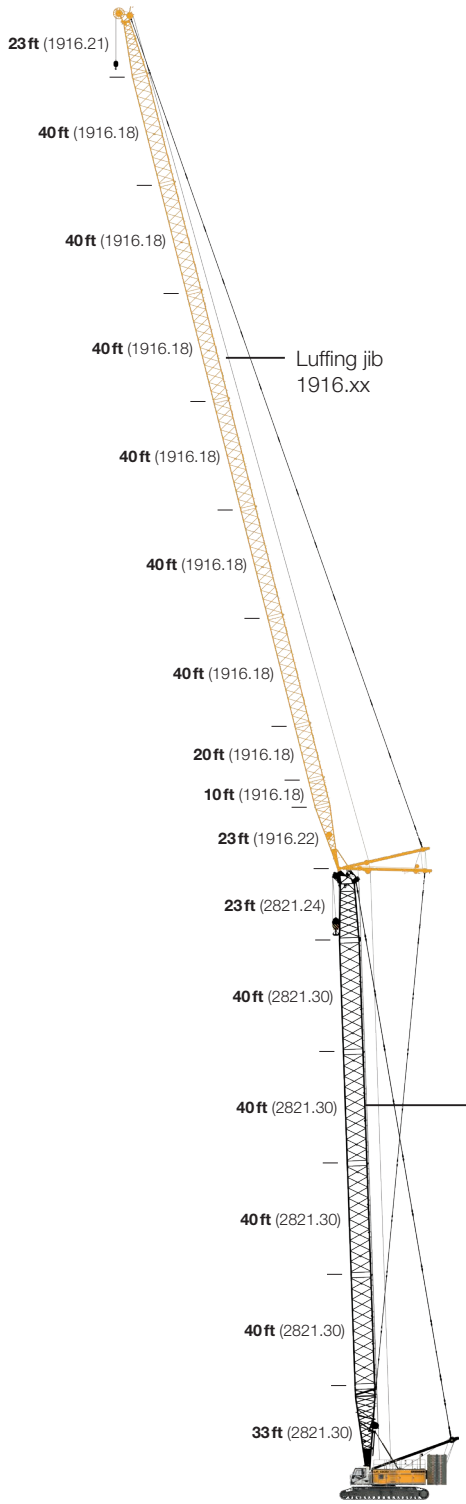

Max. combination	525 ft
Main boom	213 ft
Luffing jib	312 ft

Max. combination	377 ft
Main boom	233 ft
Luffing jib	144 ft

Further information on page 28.

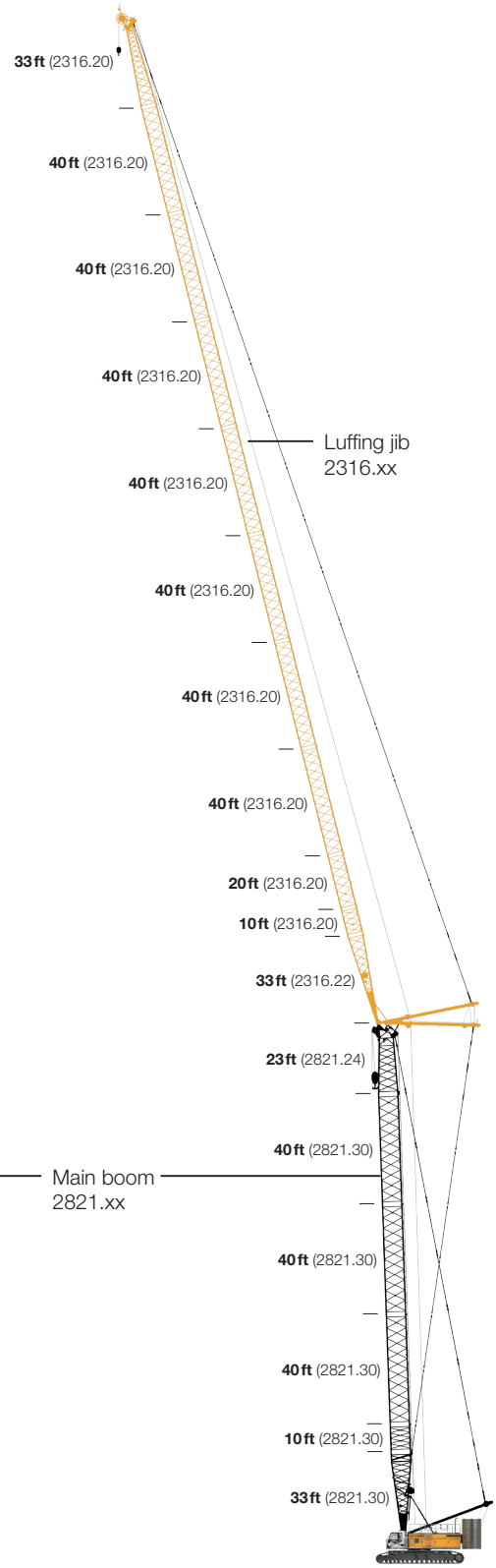

Max. combination	554 ft
Main boom	184 ft
Luffing jib	370 ft

Max. combination	348 ft
Main boom	223 ft
Luffing jib	125 ft

Further information on page 32.

https://truckmanualshub.com/

Self-assembly system of the crawler crane series

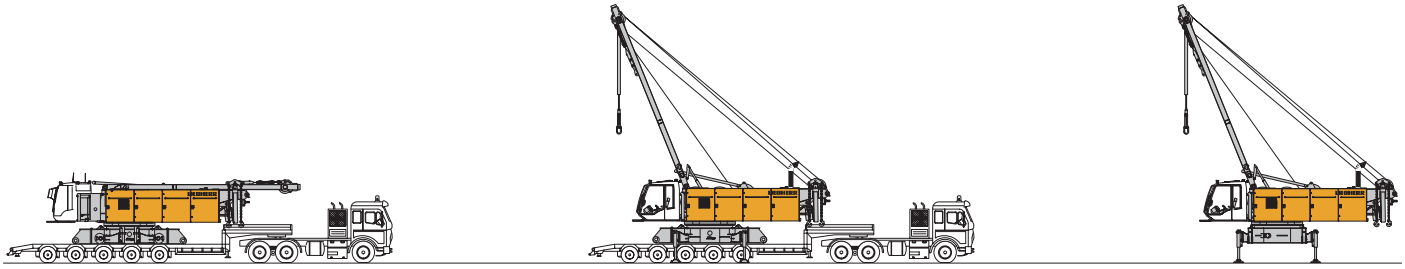

Unloading of basic machine

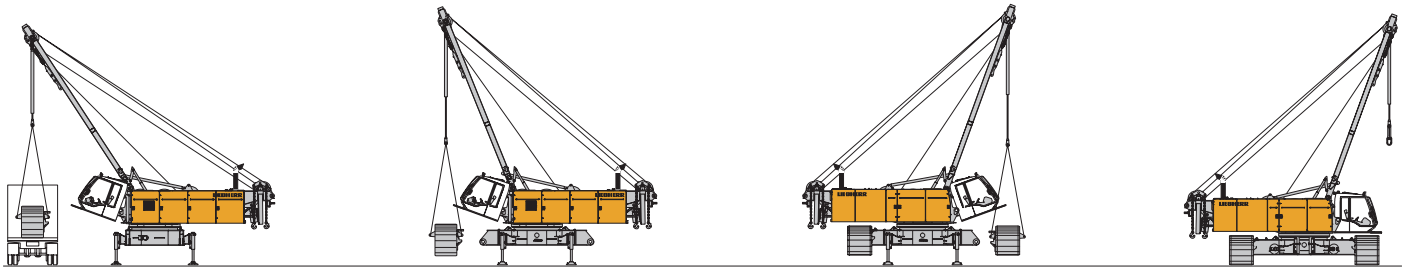

Unloading and assembly of crawler side frames

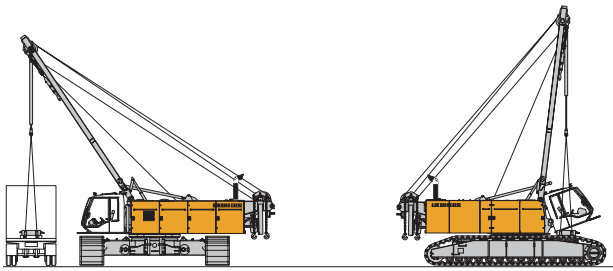

Unloading and assembly of carbody counterweight

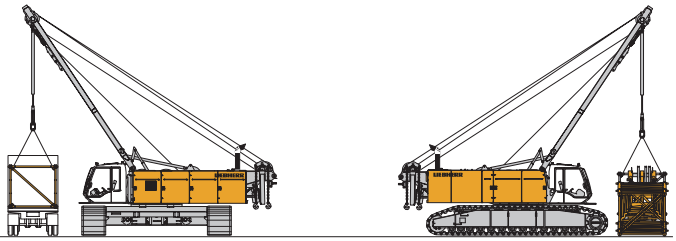

Unloading and assembly of boom

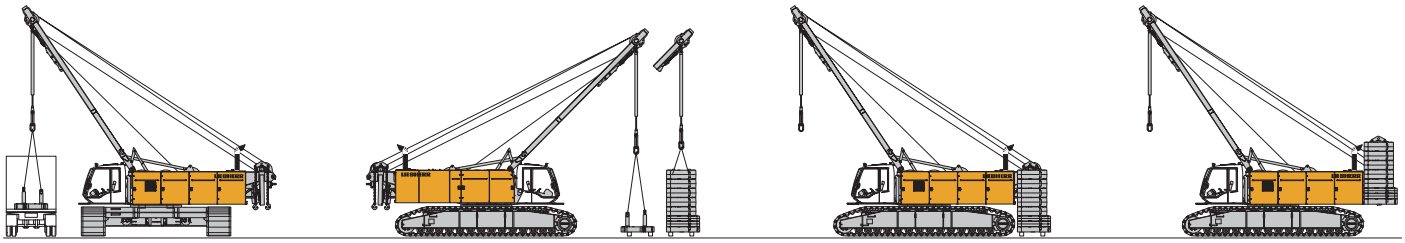

Unloading and assembly of rear counterweight

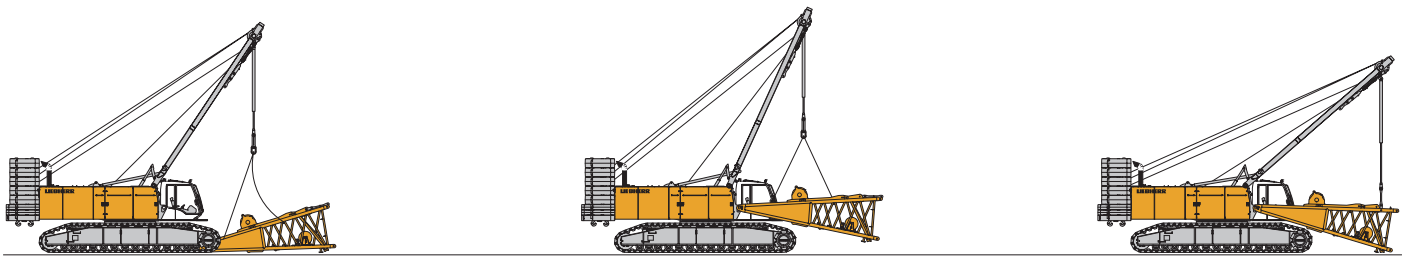

Unloading and assembly of main boom foot

https://truckmanualshub.com/

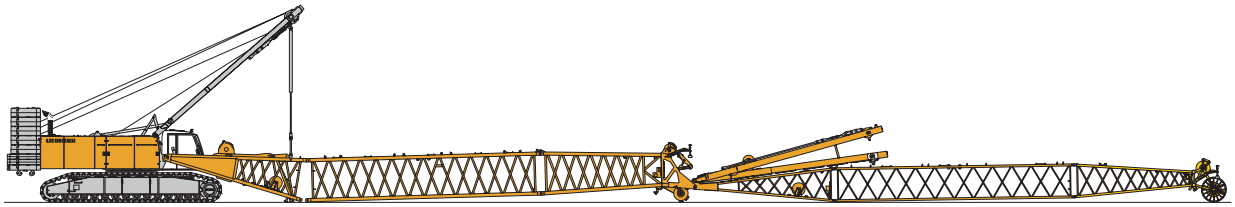

Assembly of boom

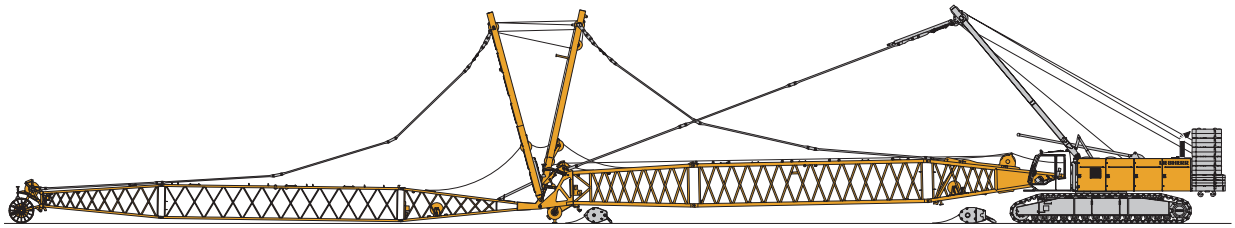

Reeving of hoist and luffing jib ropes

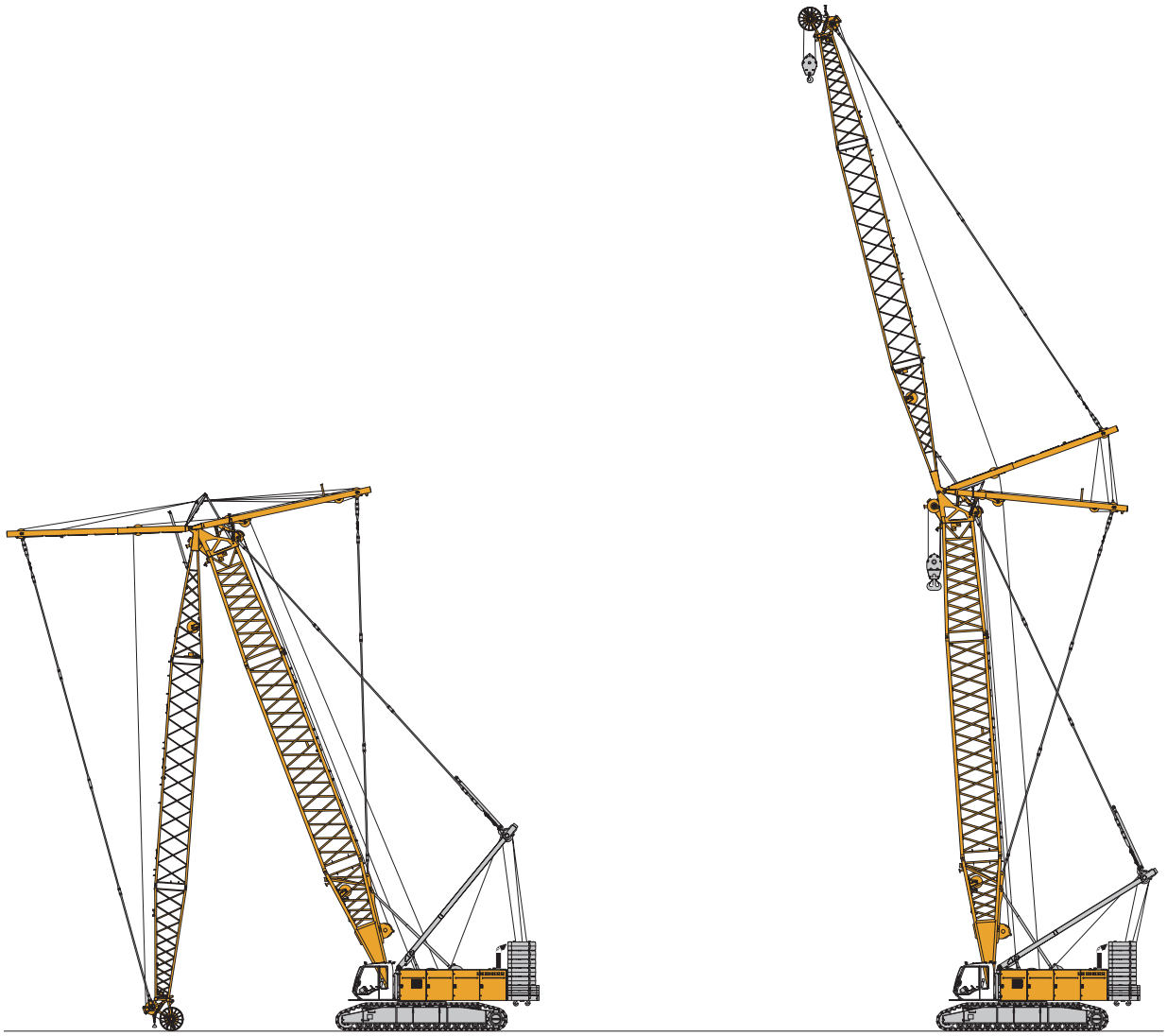

Erecting of main boom and luffing jib

https://truckmanualshub.com/

Main boom (No. 2821.xx)

Main boom 86–15°, 66-302 ft

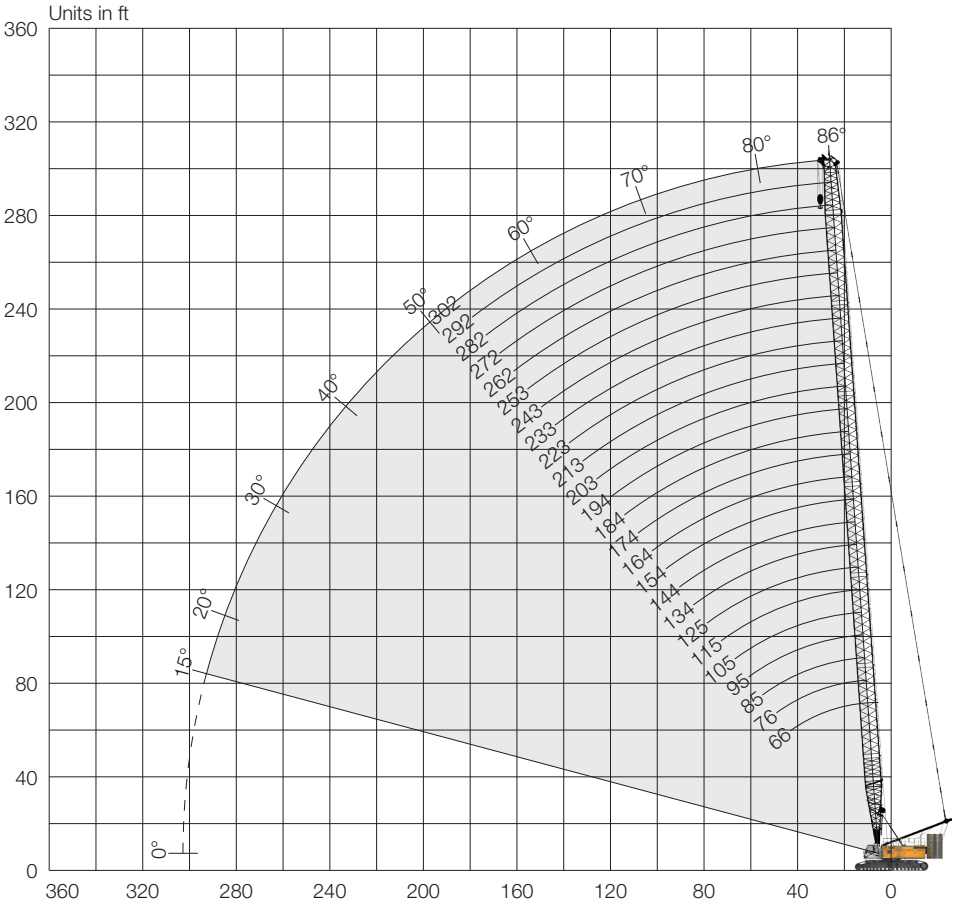

Auxiliary jib 79,370 lbs (option)
The maximum capacity of the auxiliary jib is 79,370 lbs.
The corresponding load chart is programmed in the LML system.

Main boom	302 ft

Main boom configuration (No. 2821.xx)

	Length*	Amount of boom sections																								
Boom foot	33 ft	1	1	1	1	1	1	1	1	1	1	1	1	1	1	1	1	1	1	1	1	1	1	1	1	1
Boom section	10 ft	1		1		1		1		1		1		1		1		1		1		1		1		1
Boom section	20 ft		1	1			1	1			1	1			1	1			1	1			1	1		
Boom section	40 ft				1	1	1	1	2	2	2	2	3	3	3	3	4	4	4	4	5	5	5	5	6	6
Boom head	23 ft	1	1	1	1	1	1	1	1	1	1	1	1	1	1	1	1	1	1	1	1	1	1	1	1	1
Boom length [ft]		**66**	**76**	**85**	**95**	**105**	**115**	**125**	**134**	**144**	**154**	**164**	**174**	**184**	**194**	**203**	**213**	**223**	**233**	**243**	**253**	**262**	**272**	**282**	**292**	**302**
Auxiliary jib applicable		✓	✓	✓	✓	✓	✓	✓	✓	✓	✓	✓	✓	✓	✓	✓	✓	✓	✓	✓	✓	✓	✓			

* Actual lengths of boom sections are metric (e.g. 3 m, 6 m, 7 m, 10 m, 12 m). The figures shown above are approximate conversions to feet.

https://truckmanualshub.com/

Load capacities in 1000 lbs with main boom (No. 2821.xx)

Load capacities in 1000 lbs with 229,300 lbs rear counterweight and 125,700 lbs carbody counterweight

	Boom length [ft]														
Radius	**66**	**75**	**85**	**105**	**125**	**144**	**164**	**184**	**203**	**223**	**243**	**262**	**272**	**282**	Radius
[ft]	[lbs]	[lbs]	[lbs]	[lbs]	[lbs]	[lbs]	[lbs]	[lbs]	[lbs]	[lbs]	[lbs]	[lbs]	[lbs]	[lbs]	[ft]
15	662.4	662.4													15
20	578.7	578.3	577.1	574.4	570.0	526.0									20
25	459.0	458.7	457.5	456.4	454.5	453.0	447.4	430.7	369.5						25
30	379.1	378.8	377.7	376.7	374.7	373.3	371.2	369.6	344.9	326.4	291.8	249.7	242.4	227.7	30
40	274.0	274.4	274.2	274.3	273.8	273.4	271.4	269.7	265.7	259.2	252.7	239.8	235.6	222.8	40
50	198.5	198.8	198.6	198.5	197.8	197.3	196.4	195.7	194.7	193.9	190.0	185.4	183.1	180.7	50
60	154.0	154.4	154.1	154.1	153.3	152.6	151.6	150.8	149.7	148.8	147.7	146.4	144.5	142.5	60
70		125.0	124.8	124.8	123.9	123.2	122.1	121.2	120.1	119.1	117.9	116.9	116.3	115.7	70
80			103.9	104.0	103.1	102.4	101.3	100.3	99.1	98.1	96.9	95.8	95.2	94.5	80
90				88.4	87.6	86.9	85.7	84.8	83.5	82.4	81.2	80.0	79.4	78.8	90
105				71.1	70.4	69.8	68.6	67.6	66.4	65.2	63.9	62.8	62.1	61.4	105
125					54.4	53.9	52.8	51.8	50.5	49.4	48.0	46.8	46.2	45.4	125
145						42.5	41.6	40.6	39.3	38.2	36.8	35.6	35.0	34.2	145
165							33.2	32.5	31.2	30.1	28.7	27.5	26.9	26.1	165
185								25.9	24.7	23.7	22.3	21.1	20.5	19.7	185
200									20.7	19.7	18.4	17.2	16.5	15.8	200
220										15.2	13.9	12.8	12.1	11.4	220
240											10.2	9.1	8.5	7.7	240
260												5.9	5.3	4.6	260
270													3.9	3.2	270
275														2.4	275

Load capacities in 1000 lbs with 273,400 lbs rear counterweight and 125,700 lbs carbody counterweight

	Boom length [ft]																
Radius	**66**	**75**	**85**	**105**	**125**	**144**	**164**	**184**	**203**	**223**	**243**	**262**	**272**	**282**	**292**	**302**	Radius
[ft]	[lbs]	[lbs]	[lbs]	[lbs]	[lbs]	[lbs]	[lbs]	[lbs]	[lbs]	[lbs]	[lbs]	[lbs]	[lbs]	[lbs]	[lbs]	[lbs]	[ft]
20.9							480.4										20.9
25						453.8	447.4	430.7	369.5								25
30				398.1	389.6	384.3	379.7	370.3	344.9	326.4	291.8	249.7	242.4	227.7	214.8		30
35			345.3	341.5	338.1	332.7	326.1	322.4	314.7	300.7	278.3	245.7	240.7	227.0	214.8	198.8	35
40	300.7	300.5	299.4	298.4	295.0	291.9	289.2	281.4	274.6	271.7	267.1	239.8	235.6	222.8	210.8	195.5	40
60	174.7	175.1	174.9	174.8	174.0	173.3	172.3	171.5	170.4	169.5	168.4	167.4	166.2	163.9	161.6	155.6	60
70		142.2	142.0	141.9	141.1	140.4	139.3	138.4	137.3	136.3	135.1	134.1	133.5	132.9	132.4	130.9	70
80			118.6	118.6	117.8	117.1	115.9	115.0	113.8	112.8	111.5	110.4	109.8	109.2	108.7	108.1	80
90				101.2	100.4	99.7	98.5	97.5	96.3	95.2	94.0	92.8	92.2	91.6	91.0	90.4	90
105				81.8	81.2	80.5	79.3	78.4	77.1	76.0	74.7	73.5	72.9	72.2	71.6	71.0	105
125					63.2	62.7	61.6	60.6	59.3	58.2	56.9	55.6	55.0	54.3	53.7	53.0	125
145						50.0	49.1	48.1	46.9	45.7	44.4	43.1	42.5	41.7	41.2	40.5	145
165							39.6	38.8	37.6	36.5	35.1	33.9	33.4	32.7	31.9	31.2	165
185								31.6	30.5	29.4	28.1	26.9	26.2	25.5	24.9	24.2	185
200									26.0	25.0	23.7	22.5	21.8	21.1	20.5	19.8	200
220										20.0	18.8	17.6	16.9	16.2	15.6	14.9	220
240											14.6	13.5	12.9	12.1	11.6	10.8	240
260												9.9	9.4	8.4	7.7	6.6	260
270													7.6	6.5	5.8	4.7	270
280														4.6	4.0	2.9	280
285															3.1		285

TLT 10539958. Above load charts are for reference only.
For actual lift duty please refer to load chart in operator's cabin or manual.

https://truckmanualshub.com/

Fixed jib (No. 0906.21)

Main boom 88-30°, 66-272 ft | Fixed jib 30°, 23 ft

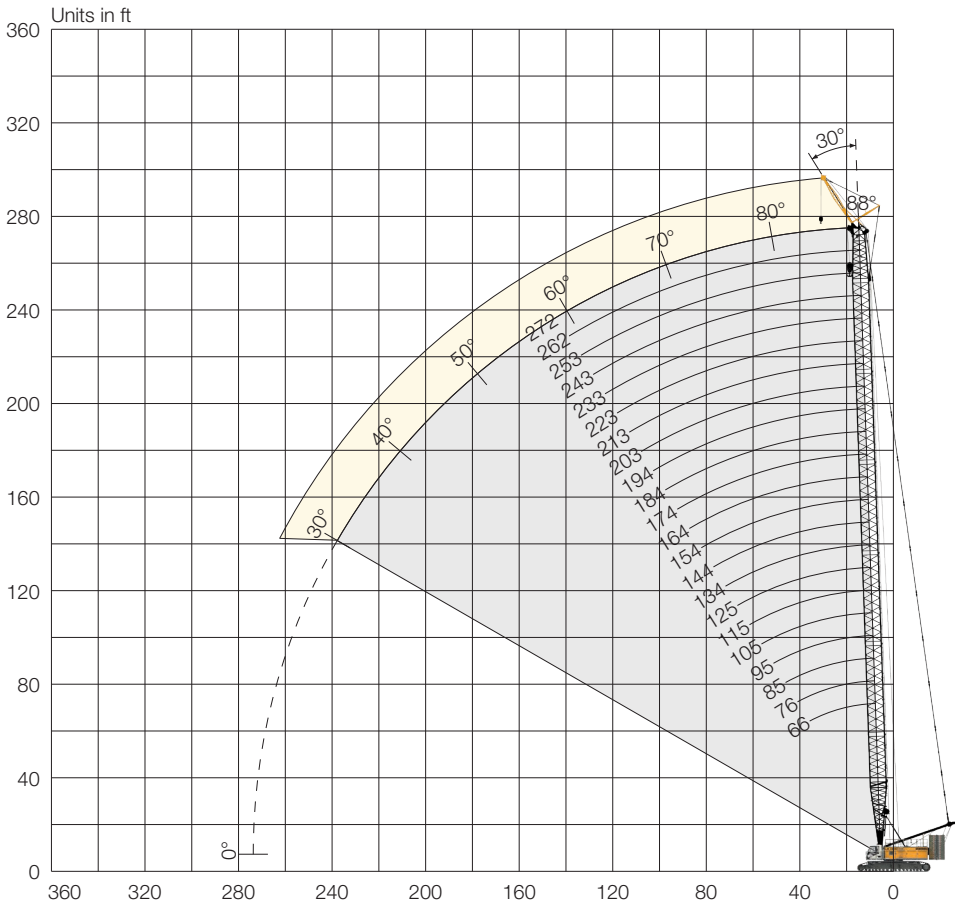

Max. combination	295 ft
Main boom	272 ft
Fixed jib	23 ft

Main boom configuration (No. 2821.xx)

	Length*	Amount of boom sections																					
Boom foot	33 ft	1	1	1	1	1	1	1	1	1	1	1	1	1	1	1	1	1	1	1	1	1	1
Boom section	10 ft	1		1		1		1		1		1		1		1		1		1		1	
Boom section	20 ft		1	1			1	1			1	1			1	1			1	1			1
Boom section	40 ft				1	1	1	1	2	2	2	2	3	3	3	3	4	4	4	4	5	5	5
Boom head	23 ft	1	1	1	1	1	1	1	1	1	1	1	1	1	1	1	1	1	1	1	1	1	1
Jib length [ft]		**66**	**76**	**85**	**95**	**105**	**115**	**125**	**134**	**144**	**154**	**164**	**174**	**184**	**194**	**203**	**213**	**223**	**233**	**243**	**253**	**262**	**272**

* Actual lengths of boom sections are metric (e.g. 3 m, 6 m, 7 m, 10 m, 12 m). The figures shown above are approximate conversions to feet.

https://truckmanualshub.com/

Load capacities in 1000 lbs with fixed jib 30° (No. 0906.21) | 273,400 lbs rear counterweight and 125,700 lbs carbody counterweight

Main boom 66 ft

Radius [ft]	[lbs]
45	142.3
50	135.4
55	128.3
60	123.3
65	119.2
70	115.1
75	111.8
80	109.8
85	108.2

Main boom 85 ft

Radius [ft]	[lbs]
40	157.3
50	143.2
55	137.9
60	131.7
65	126.4
70	122.9
75	119.5
80	116.2
85	111.6
90	103.3
95	95.9
100	89.4
105	83.4

Main boom 105 ft

Radius [ft]	[lbs]
40	162.7
50	149.5
60	138.4
70	128.9
80	120.6
85	111.1
90	102.9
95	95.5
100	89.1
105	83.2
110	78.0
115	73.2
120	68.8

Main boom 125 ft

Radius [ft]	[lbs]
35	173.8
40	166.8
50	154.4
60	143.4
70	135.2
80	119.7
90	101.9
100	88.1
110	77.1
120	68.0
130	60.5
135	57.2
140	54.0

Main boom 144 ft

Radius [ft]	[lbs]
30	184.1
40	169.8
50	157.2
60	148.4
70	139.6
80	118.9
90	101.1
100	87.3
110	76.2
120	67.2
130	59.8
140	53.4
155	45.3

Main boom 164 ft

Radius [ft]	[lbs]
26.6	188.4
30	185.3
40	171.7
50	160.5
60	152.4
70	141.0
80	117.9
90	100.0
100	86.2
120	66.1
140	52.3
160	42.0
175	33.4

Main boom 184 ft

Radius [ft]	[lbs]
27.3	187.3
30	186.5
40	174.1
50	163.5
60	154.2
70	141.1
80	117.1
100	85.2
120	65.3
140	51.3
160	41.0
180	33.1
190	29.8

Main boom 203 ft

Radius [ft]	[lbs]
28	186.2
30	186.2
40	175.9
50	166.1
60	156.7
80	116.1
100	84.1
120	64.1
140	50.1
160	39.8
180	31.9
200	25.6
205	24.2

Main boom 223 ft

Radius [ft]	[lbs]
28.7	185.1
30	185.1
40	176.9
60	155.1
80	115.1
100	83.1
120	63.0
140	49.0
160	38.7
180	30.8
200	24.5
220	19.4
225	18.2

Main boom 243 ft

Radius [ft]	[lbs]
29.4	183.8
30	183.8
40	177.2
60	157.7
80	114.1
100	81.9
120	61.8
140	47.7
160	37.4
180	29.5
200	23.2
220	18.1
240	13.8

Main boom 262 ft

Radius [ft]	[lbs]
30	181.7
40	176.6
60	161.7
80	113.2
100	80.9
120	60.7
140	46.5
160	36.2
180	28.3
200	22.1
220	16.9
240	12.7
260	8.9

Main boom 272 ft

Radius [ft]	[lbs]
30.4	180.5
40	176.4
60	161.7
80	112.7
100	80.3
120	60.1
140	45.9
160	35.6
180	27.7
200	21.4
220	16.3
240	12.1
265	7.0

TLT 10539958. Above load charts are for reference only.
For actual lift duty please refer to load chart in operator's cabin or manual.

https://truckmanualshub.com/

Fixed jib (No. 1507.20)

Main boom 88-30°, 164-272 ft | Fixed jib 30°, 26 ft

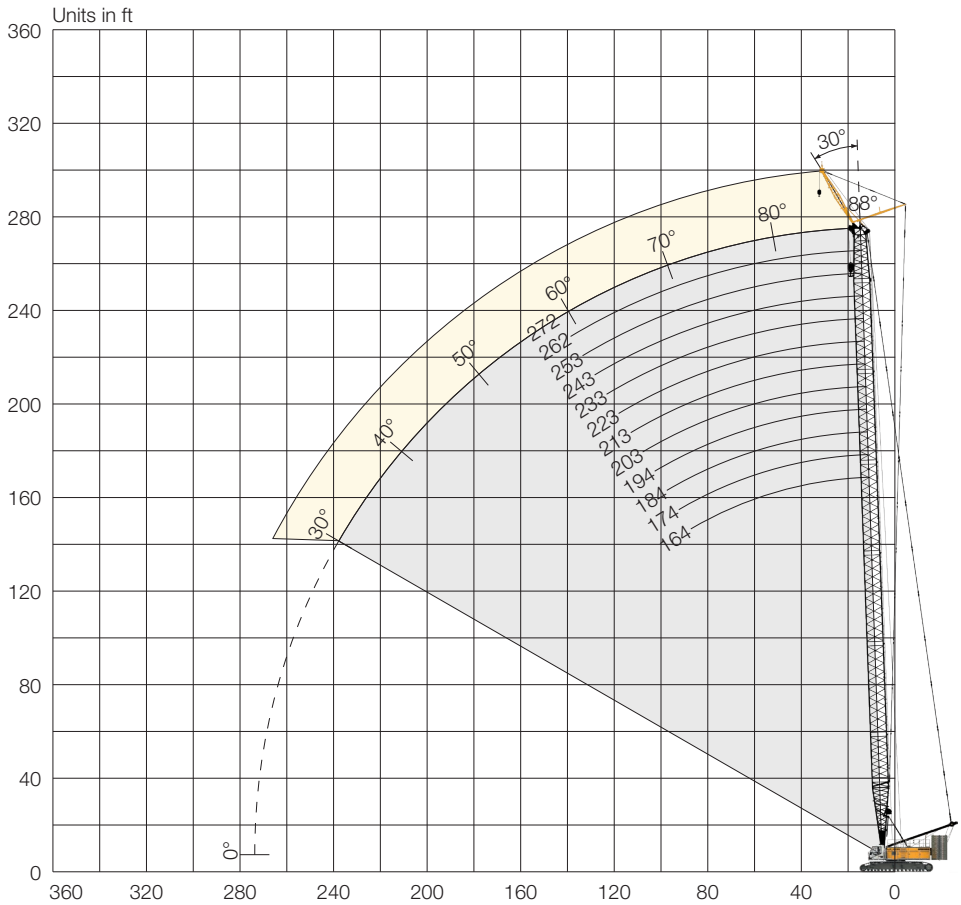

Max. combination	298 ft
Main boom	272 ft
Fixed jib	26 ft

Main boom configuration (No. 2821.xx)

	Length*	Amount of jib sections											
Jib foot	33 ft	1	1	1	1	1	1	1	1	1	1	1	1
Boom section	10 ft	1		1		1		1		1		1	
Boom section	20 ft	1			1	1			1	1			1
Boom section	40 ft	2	3	3	3	3	4	4	4	4	5	5	5
Jib head	23 ft	1	1	1	1	1	1	1	1	1	1	1	1
Jib length [ft]		**164**	**174**	**184**	**194**	**203**	**213**	**223**	**233**	**243**	**253**	**262**	**272**

* Actual lengths of boom sections are metric (e.g. 3 m, 6 m, 7 m, 10 m, 12 m).
The figures shown above are approximate conversions to feet.

https://truckmanualshub.com/

Load capacities in 1000 lbs with fixed jib 30° (No. 1507.20) | 273,400 lbs rear counterweight and 125,700 lbs carbody counterweight

Main boom 164 ft

Radius [ft]	[lbs]
26.2	257.9
30	257.9
40	251.6
50	220.5
60	175.2
70	141.2
80	117.2
90	99.3
100	85.4
120	65.4
140	51.4
160	41.1
175	34.9

Main boom 174 ft

Radius [ft]	[lbs]
26.7	257.9
30	257.9
40	247.6
50	219.6
60	174.9
70	140.9
80	116.8
100	85.0
120	65.0
140	51.1
160	40.8
180	32.8
185	31.1

Main boom 184 ft

Radius [ft]	[lbs]
27.1	257.9
30	257.9
40	246.1
50	217.9
60	174.5
70	140.4
80	116.3
100	84.4
120	64.4
140	50.4
160	40.1
180	32.2
195	27.3

Main boom 194 ft

Radius [ft]	[lbs]
27.4	257.9
30	257.9
40	247.6
50	216.5
60	174.1
70	140.0
80	115.8
100	83.9
120	63.8
140	49.8
160	39.5
180	31.6
200	25.3

Main boom 203 ft

Radius [ft]	[lbs]
27.8	257.9
30	257.9
40	251.4
50	212.0
60	173.8
80	115.3
100	83.2
120	63.2
140	49.1
160	38.8
180	30.9
200	24.6
210	21.9

Main boom 213 ft

Radius [ft]	[lbs]
28.2	257.9
30	257.9
40	257.9
50	209.6
60	173.4
80	114.9
100	82.8
120	62.7
140	48.7
160	38.4
180	30.5
200	24.2
220	19.0

Main boom 223 ft

Radius [ft]	[lbs]
28.6	257.2
30	256.7
40	251.7
60	172.3
80	114.4
100	82.2
120	62.1
140	48.0
160	37.6
180	29.8
200	23.5
220	18.3
225	17.1

Main boom 233 ft

Radius [ft]	[lbs]
29	243.6
30	243.6
40	239.2
60	170.7
80	113.9
100	81.6
120	61.5
140	47.4
160	37.0
180	29.2
200	22.9
220	17.7
235	14.4

Main boom 243 ft

Radius [ft]	[lbs]
29.3	223.1
40	217.8
60	167.9
80	113.3
100	81.0
120	60.8
140	46.7
160	36.3
180	28.4
200	22.1
220	17.0
240	12.7
245	11.7

Main boom 253 ft

Radius [ft]	[lbs]
29.7	212.7
40	212.7
60	168.8
80	112.9
100	80.5
120	60.3
140	46.2
160	35.8
180	27.9
200	21.6
220	16.5
240	12.2
255	9.3

Main boom 262 ft

Radius [ft]	[lbs]
30.1	196.3
40	193.6
60	165.4
80	112.4
100	80.0
120	59.7
140	45.5
160	35.1
180	27.2
200	20.9
220	15.8
240	11.5
260	7.2

Main boom 272 ft

Radius [ft]	[lbs]
30.4	183.7
40	181.2
60	159.3
80	111.9
100	79.4
120	59.1
140	44.9
160	34.5
180	26.6
200	20.3
220	15.1
240	10.8
270	4.2

TLT 10539958. Above load charts are for reference only.
For actual lift duty please refer to load chart in operator's cabin or manual.

https://truckmanualshub.com/

Fixed jib (No. 1008.xx)

Main boom 88-30°, 66-272 ft | Fixed jib 15° and 30°, 36-85 ft

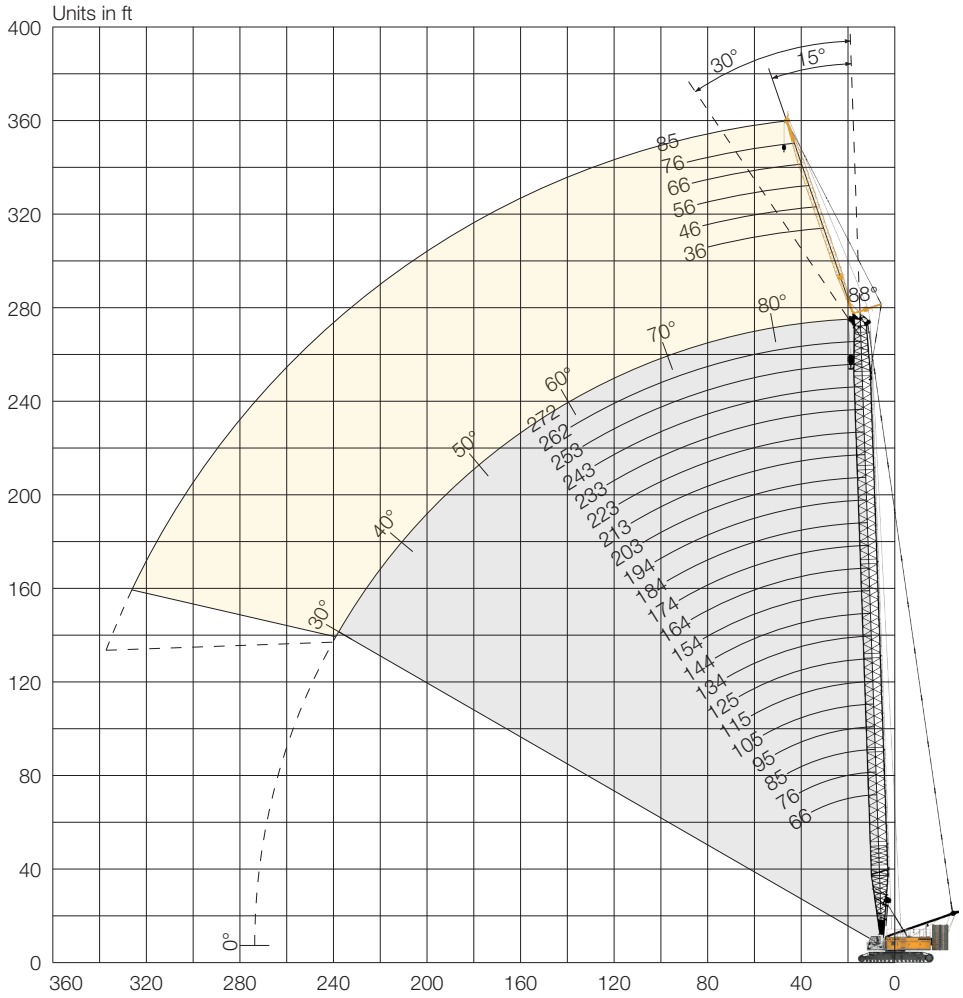

Max. combination	348 ft
Main boom	263 ft
Fixed jib	85 ft

Jib configuration (No. 1008.xx)

	Length*	Amount of jib sections					
Jib foot	18 ft	1	1	1	1	1	1
Jib section	10 ft		1		1		1
Jib section	20 ft			1	1	2	2
Jib head	18 ft	1	1	1	1	1	1
Jib length [ft]		**36**	**46**	**56**	**66**	**76**	**85**

* Actual lengths of boom sections are metric (e.g. 3 m, 5.5 m, 6 m).
The figures shown above are approximate conversions to feet.

https://truckmanualshub.com/

Load capacities in 1000 lbs with fixed jib 15° (No. 1008.xx) | 273,400 lbs rear counterweight and 125,700 lbs carbody counterweight

Main boom 66 ft

	Jib [ft]			
Radius	36	46	66	85
[ft]	[lbs]	[lbs]	[lbs]	[lbs]
40	99.2			
45	99.2	86.8		
50	97.5	78.9	58.4	
55	89.7	73.1	56.7	44.2
60	83.3	67.5	52.3	42.5
70	73.0	60.1	45.9	37.3
80	64.7	54.3	40.5	33.4
90	60.5	48.7	36.6	30.8
100	54.9	44.6	33.2	28.2
110		41.0	31.9	26.0
130			27.6	22.1
150				19.5

Main boom 95 ft

	Jib [ft]			
Radius	36	46	66	85
[ft]	[lbs]	[lbs]	[lbs]	[lbs]
35	99.2			
40	99.2	96.2		
45	99.2	92.9	67.9	
50	99.2	89.0	63.6	49.6
60	97.8	76.8	57.6	45.1
70	85.9	68.1	50.6	40.4
90	69.8	57.6	41.3	33.4
110	61.3	48.3	35.0	28.8
125	54.9	43.7	32.1	26.1
135		41.1	31.1	24.3
155			27.7	21.6
175				19.5

Main boom 125 ft

	Jib [ft]			
Radius	36	46	66	85
[ft]	[lbs]	[lbs]	[lbs]	[lbs]
30	99.2	99.2		
40	99.2	99.2	76.1	
45	99.2	95.8	70.5	52.2
50	99.2	92.9	66.6	50.2
70	98.3	75.5	55.0	42.4
90	80.1	62.2	45.7	35.4
110	68.0	55.2	38.8	31.4
130	61.0	48.1	34.1	27.7
150	49.2	43.2	31.7	24.6
160		41.1	30.3	23.2
180			27.7	21.2
200				19.6

Main boom 154 ft

	Jib [ft]			
Radius	36	46	66	85
[ft]	[lbs]	[lbs]	[lbs]	[lbs]
25	99.2			
30	99.2	99.2		
35	99.2	99.2	79.7	
45	99.2	98.8	72.9	52.2
60	99.2	90.5	62.8	47.7
80	98.8	74.6	53.1	40.7
100	82.3	63.3	45.6	34.8
140	53.1	50.5	35.2	28.2
175	36.9	37.8	31.2	23.6
185		34.3	29.9	22.6
205			27.7	21.0
225				19.6

Main boom 184 ft

	Jib [ft]			
Radius	36	46	66	85
[ft]	[lbs]	[lbs]	[lbs]	[lbs]
23.4	99.2			
30	99.2	99.2		
35	99.2	99.2	78.9	
45	99.2	99.2	74.8	52.1
80	98.7	80.1	56.5	42.2
120	65.0	60.3	42.6	33.4
160	41.1	42.0	34.5	27.5
180	33.4	34.2	31.9	25.1
200	27.2	28.0	29.5	23.1
210		25.3	26.8	22.3
230			22.1	20.9
250				19.4

Main boom 203 ft

	Jib [ft]			
Radius	36	46	66	85
[ft]	[lbs]	[lbs]	[lbs]	[lbs]
24.1	99.2			
30	99.2	99.2		
40	99.2	99.2	76.8	
45	99.2	99.2	75.3	51.8
70	99.1	89.7	61.8	46.4
120	63.7	63.1	44.6	33.6
160	39.7	40.7	36.2	28.4
200	25.9	26.7	28.2	24.1
220	20.8	21.6	23.1	22.4
230		19.4	20.9	21.8
245			17.8	19.1
265				15.5

Main boom 223 ft

	Jib [ft]			
Radius	36	46	66	85
[ft]	[lbs]	[lbs]	[lbs]	[lbs]
24.7	99.2			
30	99.2	99.2		
40	99.2	99.2	76.3	
45	99.2	99.2	74.8	51.3
80	96.6	86.8	59.0	43.8
120	62.5	63.7	46.2	34.6
160	38.5	39.5	37.6	29.7
200	24.6	25.5	27.1	25.2
235	16.4	17.2	18.6	20.0
245		15.2	16.7	18.0
265			13.1	14.4
285				11.3

Main boom 262 ft

	Jib [ft]			
Radius	36	46	66	85
[ft]	[lbs]	[lbs]	[lbs]	[lbs]
26.1	99.2			
30	99.2	99.2		
40	99.2	99.2	74.2	
50	99.2	99.2	72.1	49.7
90	92.4	84.1	57.2	42.2
170	31.8	32.7	34.6	30.3
210	19.3	20.2	21.8	23.3
250	10.9	11.7	13.2	14.5
270	7.1	8.1	9.8	11.1
280		6.2	8.1	9.6
300			4.6	6.2
320				3.1

Main boom 272 ft

	Jib [ft]	
Radius	36	46
[ft]	[lbs]	[lbs]
26.5	99.2	
35	99.2	99.2
40	99.2	99.2
80	99.2	89.2
120	59.4	60.6
160	35.2	36.2
200	21.3	22.1
220	16.3	17.1
240	12.1	12.9
260	8.2	9.1
280	4.4	5.3
285		4.4

TLT 10539958. Above load charts are for reference only.
For actual lift duty please refer to load chart in operator's cabin or manual.

https://truckmanualshub.com/

Load capacities in 1000 lbs with fixed jib 30° (No. 1008.xx) | 273,400 lbs rear counterweight and 125,700 lbs carbody counterweight

Main boom 66 ft

	Jib [ft]			
Radius	36	46	66	85
[ft]	[lbs]	[lbs]	[lbs]	[lbs]
50	66.7			
55	64.6	52.4		
65	58.5	46.9	34.5	
70	55.7	44.5	32.9	28.0
80	51.0	40.7	31.3	25.3
90	47.5	37.7	28.8	23.0
100	45.3	35.6	26.7	21.2
110		34.2	25.0	19.6
120			23.8	18.5
130			23.1	17.4
140				16.7
150				16.3

Main boom 95 ft

	Jib [ft]			
Radius	36	46	66	85
[ft]	[lbs]	[lbs]	[lbs]	[lbs]
45	76.4			
50	72.6	58.9		
60	65.1	53.3	37.9	
65	64.3	50.6	36.1	30.3
70	62.3	48.4	34.5	28.8
80	57.1	44.8	32.4	26.3
90	53.3	41.6	31.1	24.4
110	47.6	37.1	27.3	21.2
125	45.2	35.0	25.3	19.4
135		34.1	24.2	18.5
155			23.0	16.9
175				16.3

Main boom 125 ft

	Jib [ft]			
Radius	36	46	66	85
[ft]	[lbs]	[lbs]	[lbs]	[lbs]
35	89.3			
40	84.1	64.5		
50	76.1	61.1	42.5	
65	66.8	53.8	37.5	30.5
70	64.6	51.6	35.9	29.3
90	58.1	45.0	32.0	25.3
110	52.0	40.3	29.3	22.4
130	47.6	36.7	26.6	20.1
150	45.2	34.8	24.5	18.5
160		34.1	23.8	17.7
180			23.0	16.7
200				16.3

Main boom 154 ft

	Jib [ft]			
Radius	36	46	66	85
[ft]	[lbs]	[lbs]	[lbs]	[lbs]
35	90.5			
40	86.3	66.3		
50	79.2	62.5	41.4	
65	70.8	55.7	38.1	30.8
80	64.3	50.5	34.6	27.8
100	58.8	45.2	31.8	24.7
140	49.2	37.8	27.0	20.2
160	43.4	35.4	25.1	18.8
175	37.2	34.6	24.0	17.8
185		34.1	23.6	17.3
205			23.0	16.6
225				16.3

Main boom 184 ft

	Jib [ft]			
Radius	36	46	66	85
[ft]	[lbs]	[lbs]	[lbs]	[lbs]
32.1	93.1			
40	88.2	66.4		
55	78.4	61.5	41.4	
65	72.9	57.6	38.8	31.2
90	64.0	49.7	33.8	26.8
130	54.4	41.4	29.6	22.0
170	37.6	36.5	25.7	19.0
190	30.5	31.5	24.3	17.9
205	26.0	27.0	23.7	17.2
215		24.3	23.4	16.8
230			22.4	16.5
250				16.3

Main boom 203 ft

	Jib [ft]			
Radius	36	46	66	85
[ft]	[lbs]	[lbs]	[lbs]	[lbs]
32.8	92.7			
40	88.7	66.4		
55	80.0	62.3	41.7	
65	74.5	58.7	39.2	31.2
100	63.6	48.6	33.2	25.8
140	51.0	41.3	29.3	21.8
180	32.6	33.6	25.8	19.0
200	26.3	27.2	24.5	18.0
220	21.0	21.9	23.6	17.1
230		19.6	21.4	16.8
250			17.1	16.5
270				14.9

Main boom 223 ft

	Jib [ft]			
Radius	36	46	66	85
[ft]	[lbs]	[lbs]	[lbs]	[lbs]
33.4	92.3			
40	89.1	65.9		
55	80.8	62.9	41.9	
65	76.0	59.7	39.6	31.0
100	64.1	49.7	33.5	26.2
140	49.9	42.6	30.2	22.2
180	31.5	32.6	26.5	19.4
220	20.0	20.9	22.7	17.6
235	16.6	17.5	19.3	17.1
245		15.4	17.2	16.8
265			13.4	15.0
285				11.6

Main boom 262 ft

	Jib [ft]			
Radius	36	46	66	85
[ft]	[lbs]	[lbs]	[lbs]	[lbs]
34.8	90.8			
45	86.9	66.4		
55	81.8	63.8	41.6	
70	75.7	59.0	38.9	30.6
110	63.7	49.3	33.4	25.6
150	41.9	42.6	30.4	22.1
190	25.7	26.8	27.0	19.7
230	15.3	16.2	18.1	17.9
270	7.4	8.5	10.4	12.0
280		6.5	8.7	10.3
300			4.9	6.9
320				3.4

Main boom 272 ft

	Jib [ft]	
Radius	36	46
[ft]	[lbs]	[lbs]
35.2	90.7	
45	87.1	66.4
60	80.1	62.1
100	66.7	52.1
140	46.9	45.0
180	28.5	29.6
200	22.1	23.2
220	16.9	17.9
240	12.6	13.5
260	8.6	9.7
280	4.6	5.7
290		3.8

TLT 10539958. Above load charts are for reference only.
For actual lift duty please refer to load chart in operator's cabin or manual.

https://truckmanualshub.com/

Fixed jib (No. 1713.xx)

Main boom 88-30°, 66-262 ft | Fixed jib 15° and 30°, 46-115 ft

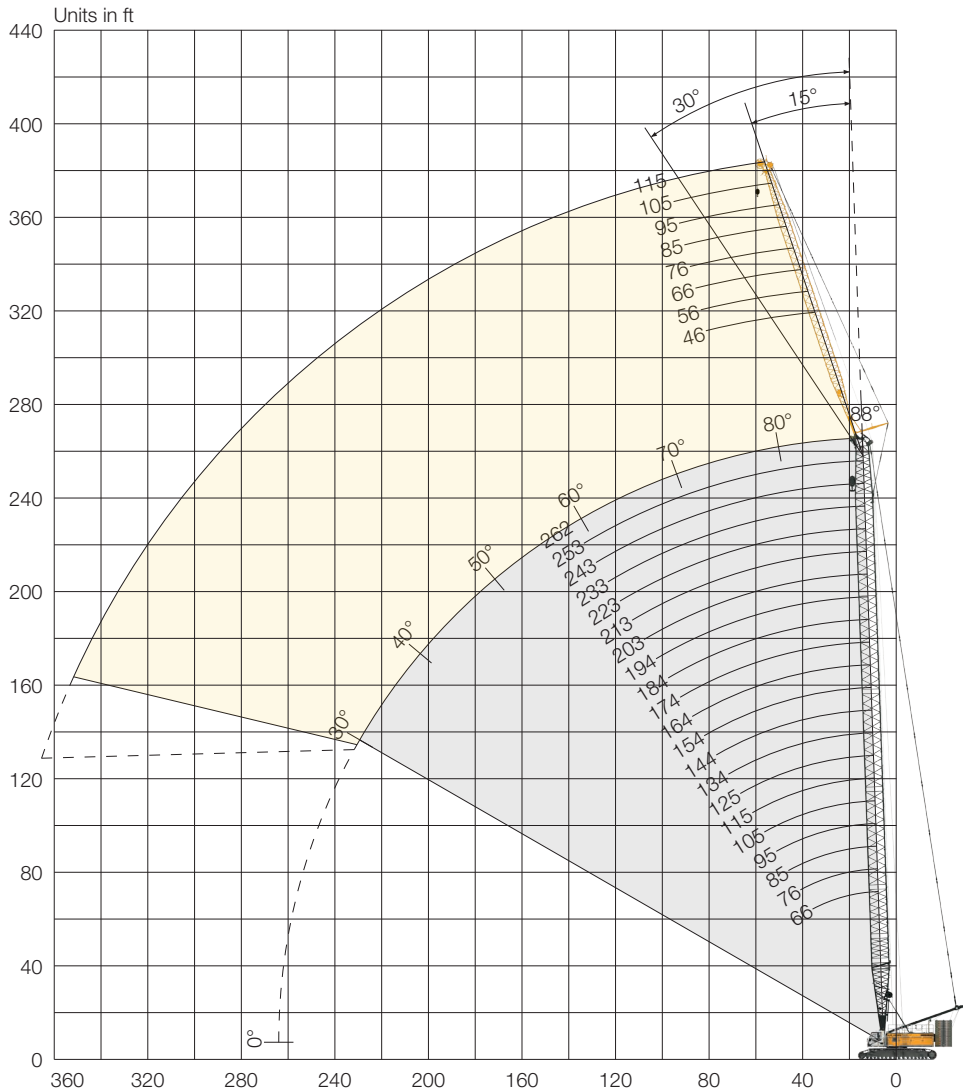

Max. combination	358 ft
Main boom	243 ft
Fixed jib	115 ft

Jib configuration (No. 1713.xx)

	Length*	Amount of jib sections							
Jib foot	23 ft	1	1	1	1	1	1	1	1
Jib section	10 ft		1		1		1		1
Jib section	20 ft			1	1			1	1
Jib section	40 ft					1	1	1	1
Jib head	23 ft	1	1	1	1	1	1	1	1
Jib length [ft]		**46**	**56**	**66**	**76**	**85**	**95**	**105**	**115**

* Actual lengths of boom sections are metric (e.g. 3 m, 6 m, 7 m, 12 m).
The figures shown above are approximate conversions to feet.

https://truckmanualshub.com/

Load capacities in 1000 lbs with fixed jib 15° (No. 1713.xx) | 273,400 lbs rear counterweight and 125,700 lbs carbody counterweight

Main boom 66 ft

	Jib [ft]			
Radius	46	76	95	115
[ft]	[lbs]	[lbs]	[lbs]	[lbs]
45	102.2			
50	93.3	65.4	56.1	
55	87.6	60.7	52.2	45.3
60	81.6	57.5	48.1	41.8
70	71.1	50.0	42.3	36.6
80	63.4	44.5	37.3	33.2
90	58.0	39.9	33.7	30.0
100	53.5	36.5	30.7	27.7
110	48.9	33.4	29.2	25.0
140		28.3	23.1	19.6
155			21.1	17.7
175				15.7

Main boom 95 ft

	Jib [ft]			
Radius	46	76	95	115
[ft]	[lbs]	[lbs]	[lbs]	[lbs]
35	129.5			
45	112.0	74.3	62.4	
50	104.6	69.6	58.1	49.4
60	90.6	60.7	51.0	43.2
70	82.0	54.9	45.0	38.6
80	73.4	49.3	40.5	34.5
100	61.5	40.9	33.8	29.5
120	54.4	35.2	29.6	25.3
135	49.0	32.6	27.0	22.6
165		28.4	22.6	18.6
185			20.5	16.9
200				15.7

Main boom 125 ft

	Jib [ft]			
Radius	46	76	95	115
[ft]	[lbs]	[lbs]	[lbs]	[lbs]
30	132.3			
40	127.8	83.5		
45	120.0	78.1	64.4	
55	105.7	69.2	56.5	46.8
80	82.3	54.1	43.8	36.1
100	69.3	45.9	36.8	31.3
120	60.2	39.6	31.8	27.5
140	54.5	35.1	29.2	23.8
160	44.4	33.0	26.0	21.2
190		28.9	22.6	18.0
210			20.9	16.6
230				15.4

Main boom 154 ft

	Jib [ft]			
Radius	46	76	95	115
[ft]	[lbs]	[lbs]	[lbs]	[lbs]
26.9	132.3			
40	127.9	83.4		
45	125.5	78.6	63.2	
55	111.4	70.1	57.2	47.5
90	82.4	52.1	41.8	34.5
130	59.4	39.7	31.6	27.4
150	47.6	35.8	29.1	24.1
170	38.7	32.6	26.5	21.7
185	33.4	31.8	24.7	20.1
215		26.6	22.0	17.6
235			20.6	16.5
255				15.4

Main boom 184 ft

	Jib [ft]			
Radius	46	76	95	115
[ft]	[lbs]	[lbs]	[lbs]	[lbs]
27.9	132.3			
40	129.7	85.1		
50	123.4	77.0	61.7	
55	116.8	72.9	58.9	48.0
90	86.9	56.1	44.0	35.7
130	57.5	43.4	34.3	28.6
170	36.8	35.7	29.0	23.1
190	30.0	31.8	26.5	21.2
210	24.4	26.1	24.4	19.4
240		19.3	20.4	17.4
260			16.6	16.2
280				14.2

Main boom 203 ft

	Jib [ft]			
Radius	46	76	95	115
[ft]	[lbs]	[lbs]	[lbs]	[lbs]
28.6	132.3			
40	131.8	84.1		
50	123.7	77.7	62.2	
55	120.1	73.8	59.2	47.7
90	89.9	58.0	44.9	36.5
130	56.2	45.3	35.4	29.5
170	35.5	37.2	29.7	24.0
210	23.1	24.8	25.5	20.3
230	18.4	20.1	21.2	18.8
255		15.2	16.3	17.1
275			12.9	13.8
295				10.8

Main boom 223 ft

	Jib [ft]			
Radius	46	76	95	115
[ft]	[lbs]	[lbs]	[lbs]	[lbs]
29.3	132.3			
40	132.3	83.4		
50	124.6	78.0	62.5	
55	121.7	74.8	59.6	47.3
90	92.7	58.9	45.9	37.2
130	55.1	47.1	36.4	30.5
170	34.3	36.3	30.4	25.0
210	21.9	23.6	24.8	21.1
245	14.3	15.9	17.0	17.8
275		10.8	11.8	12.7
295			8.9	9.7
315				7.0

Main boom 243 ft

	Jib [ft]			
Radius	46	76	95	115
[ft]	[lbs]	[lbs]	[lbs]	[lbs]
30	132.3			
45	130.9	82.2		
50	125.5	78.3	61.9	
55	121.5	75.5	59.8	47.0
80	101.6	62.9	50.2	40.1
120	61.4	50.6	39.5	33.2
160	37.1	39.3	32.6	27.2
200	23.2	25.0	26.3	22.7
260	10.3	11.9	13.0	13.8
290		6.8	8.2	9.2
310			4.9	6.0
330				2.9

Main boom 262 ft

	Jib [ft]	
Radius	46	56
[ft]	[lbs]	[lbs]
30.7	132.3	
35	132.3	113.3
60	118.0	95.5
100	80.6	75.2
140	46.1	47.0
180	28.2	28.8
220	16.9	17.4
240	12.6	13.2
260	8.8	9.4
280	4.9	5.5
285		4.6
290		3.7

TLT 11230834. Above load charts are for reference only.
For actual lift duty please refer to load chart in operator's cabin or manual.

https://truckmanualshub.com/

Load capacities in 1000 lbs with fixed jib 30° (No. 1713.xx) | 273,400 lbs rear counterweight and 125,700 lbs carbody counterweight

Main boom 66 ft

	Jib [ft]			
Radius	46	76	95	115
[ft]	[lbs]	[lbs]	[lbs]	[lbs]
50	73.0			
60	65.2	45.1		
65	63.1	42.8	35.9	
75	57.4	38.9	33.2	28.2
80	55.3	37.1	32.1	27.6
90	51.5	34.3	29.4	25.2
100	49.1	31.9	26.9	23.0
110	47.5	30.7	25.0	21.3
120		29.0	23.4	19.8
140		27.1	20.9	17.4
160			19.8	15.7
180				14.8

Main boom 95 ft

	Jib [ft]			
Radius	46	76	95	115
[ft]	[lbs]	[lbs]	[lbs]	[lbs]
45	80.9			
55	73.1	48.5		
65	66.9	44.3	36.3	
80	60.5	39.4	33.1	28.0
90	56.6	36.5	30.6	25.8
100	53.6	34.3	28.5	23.9
110	51.0	32.3	26.6	22.4
120	49.2	31.3	25.1	20.9
135	47.6	29.3	23.1	19.2
165		27.1	20.4	16.6
185			19.8	15.4
205				14.9

Main boom 125 ft

	Jib [ft]			
Radius	46	76	95	115
[ft]	[lbs]	[lbs]	[lbs]	[lbs]
40	86.9			
55	76.1	49.9		
70	68.1	44.5	35.6	
80	63.7	41.3	33.4	28.2
100	57.5	36.6	30.1	24.6
120	52.6	33.1	26.8	21.8
140	49.3	31.2	24.3	19.7
150	48.5	30.0	23.3	18.7
160	44.6	29.0	22.5	17.9
190		27.5	20.5	16.0
210			20.1	15.2
230				14.8

Main boom 154 ft

	Jib [ft]			
Radius	46	76	95	115
[ft]	[lbs]	[lbs]	[lbs]	[lbs]
40	87.6			
55	78.4	49.1		
70	70.9	44.5	35.4	
80	66.7	41.8	33.2	28.3
100	61.0	37.5	30.5	25.1
120	55.7	34.3	27.5	22.5
140	51.9	31.7	25.2	20.4
160	43.5	30.1	23.2	18.8
185	33.5	28.1	21.5	17.1
215		26.9	20.2	15.7
235			19.8	15.1
255				14.9

Main boom 184 ft

	Jib [ft]			
Radius	46	76	95	115
[ft]	[lbs]	[lbs]	[lbs]	[lbs]
40	87.8			
60	77.6	48.7		
70	72.8	45.9	36.2	
80	69.5	43.6	34.2	27.6
100	63.0	39.6	31.7	25.4
120	58.5	36.1	28.9	23.0
140	52.4	33.5	26.5	21.1
180	33.8	30.3	23.1	18.1
215	23.3	25.6	21.1	16.4
240		19.6	20.3	15.5
260			16.9	15.0
280				14.5

Main boom 203 ft

	Jib [ft]			
Radius	46	76	95	115
[ft]	[lbs]	[lbs]	[lbs]	[lbs]
40	87.5			
60	78.2	49.0		
70	74.0	46.3	36.3	
80	70.4	44.1	34.4	27.5
100	64.2	40.1	32.2	25.6
140	51.2	34.4	27.1	21.6
180	32.8	31.1	23.7	18.6
220	21.0	23.2	21.5	16.6
230	18.6	20.8	21.0	16.3
260		14.5	16.0	15.3
280			12.4	13.6
300				10.4

Main boom 223 ft

	Jib [ft]			
Radius	46	76	95	115
[ft]	[lbs]	[lbs]	[lbs]	[lbs]
45	86.1			
60	78.8	49.1		
70	75.2	46.7	36.1	
85	70.0	43.6	33.7	27.9
100	65.7	40.6	32.6	25.8
140	50.2	35.1	27.6	22.0
180	31.7	31.5	24.3	19.1
220	20.0	22.2	21.8	17.0
245	14.5	16.6	18.0	16.1
275		11.0	12.4	13.6
295			9.2	10.4
315				7.4

Main boom 243 ft

	Jib [ft]			
Radius	46	76	95	115
[ft]	[lbs]	[lbs]	[lbs]	[lbs]
45	86.4			
60	79.3	48.7		
70	76.1	46.8	35.8	
85	70.7	43.7	33.9	27.7
100	66.8	40.9	32.6	26.0
140	49.0	35.5	28.1	22.2
180	30.5	31.7	24.8	19.5
220	18.7	21.0	22.3	17.4
265	9.7	11.7	13.1	14.3
295		6.2	8.1	9.4
315			4.4	6.0
335				2.5

Main boom 262 ft

	Jib [ft]	
Radius	46	56
[ft]	[lbs]	[lbs]
45	85.8	
50	83.9	67.5
60	79.8	65.6
80	72.8	60.3
100	67.6	55.5
120	62.5	51.7
140	48.0	48.7
180	29.4	30.3
220	17.6	18.3
260	9.3	10.1
280	5.2	5.9
290		4.0

TLT 11230834. Above load charts are for reference only.
For actual lift duty please refer to load chart in operator's cabin or manual.

https://truckmanualshub.com/

Luffing jib (No. 1916.xx)

Main boom 88-45°, 95-233 ft | Luffing jib 78-15°, 66-312 ft

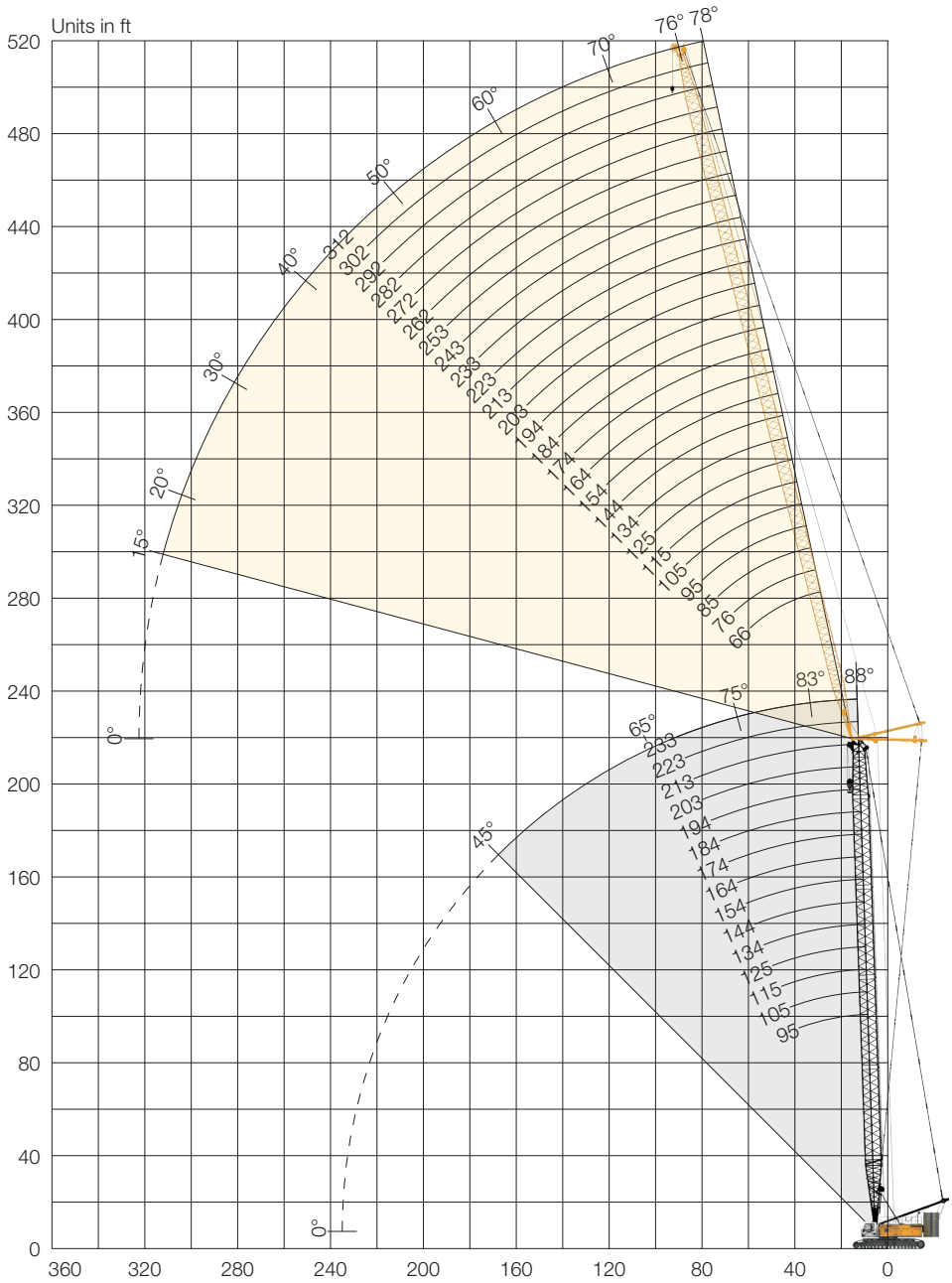

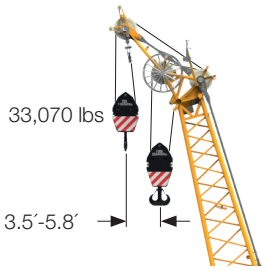

Auxiliary jib 33,070 lbs (option)
The maximum capacity of the auxiliary jib is 33,070 lbs .
The corresponding load chart is programmed in the LML system.

Max. combination	525 ft
Main boom	213 ft
Luffing jib	312 ft
Max. combination	377 ft
Main boom	233 ft
Luffing jib	144 ft

Jib configuration (No. 1916.xx)

	Length*	Amount of jib sections																									
Jib foot	23 ft	1	1	1	1	1	1	1	1	1	1	1	1	1	1	1	1	1	1	1	1	1	1	1	1	1	1
Jib section	10 ft		1		1		1		1		1		1		1		1		1		1		1		1		1
Jib section	20 ft	1	1			1	1			1	1			1	1			1	1			1	1			1	1
Jib section	40 ft			1	1	1	1	2	2	2	2	3	3	3	3	4	4	4	4	5	5	5	5	6	6	6	6
Jib head	23 ft	1	1	1	1	1	1	1	1	1	1	1	1	1	1	1	1	1	1	1	1	1	1	1	1	1	1
Jib length [ft]		**66**	**76**	**85**	**95**	**105**	**115**	**125**	**134**	**144**	**154**	**164**	**174**	**184**	**194**	**203**	**213**	**223**	**233**	**243**	**253**	**262**	**272**	**282**	**292**	**302**	**312**
Auxiliary jib applicable		✓	✓	✓	✓	✓	✓	✓	✓	✓	✓	✓	✓	✓	✓	✓	✓	✓	✓	✓	✓	✓	✓	✓	✓	✓	

* Actual lengths of boom sections are metric (e.g. 3 m, 6 m, 7 m, 12 m). The figures shown above are approximate conversions to feet.

https://truckmanualshub.com/

Load capacities in 1000 lbs with luffing jib (No. 1916.xx) | 273,400 lbs rear counterweight and 125,700 lbs carbody counterweight

Main boom 95 ft | 88°

	Jib [ft]							
Radius	66	95	115	154	194	233	272	312
[ft]	[lbs]	[lbs]	[lbs]	[lbs]	[lbs]	[lbs]	[lbs]	[lbs]
37.6			132.3					
45		142.0	124.5					
50		133.3	117.4	87.9				
55	150.3	125.2	112.1	84.4	61.0			
65	114.8	110.9	100.5	78.4	58.3	42.5		
75	79.7	98.6	89.5	72.9	55.5	40.6	28.7	
80		90.2	84.3	70.4	54.5	39.8	27.9	18.9
100		61.7	66.4	59.9	50.3	36.8	25.3	17.3
105		33.4	62.6	57.5	49.6	36.0	24.7	16.8
120			47.6	50.1	46.7	34.2	23.2	15.6
160				31.1	35.8	30.0	20.0	13.1
200					22.5	24.7	17.8	11.1
235						16.6	16.4	9.5
275							10.4	7.9
310								5.8

Main boom 134 ft | 88°

	Jib [ft]							
Radius	66	95	115	154	194	233	272	312
[ft]	[lbs]	[lbs]	[lbs]	[lbs]	[lbs]	[lbs]	[lbs]	[lbs]
28.7	195.4							
35	190.6	154.4						
40	182.6	149.3	126.1					
50	162.7	133.8	115.4	85.3				
60	137.0	119.3	105.0	79.9	58.3			
65	120.9	112.0	99.9	77.1	56.9	41.1		
75	88.2	100.8	90.2	72.2	54.3	39.7	28.0	
85		85.9	80.8	67.8	52.2	38.1	26.7	17.9
105		57.4	64.4	58.1	48.4	35.4	24.3	16.1
125			33.4	48.7	45.3	33.1	22.3	14.7
160				32.7	36.6	29.6	19.7	12.6
200					24.0	25.3	17.5	10.7
235						17.5	16.2	9.2
275							11.1	7.7
315								5.4

Main boom 174 ft | 88°

	Jib [ft]							
Radius	66	95	115	154	194	233	272	312
[ft]	[lbs]	[lbs]	[lbs]	[lbs]	[lbs]	[lbs]	[lbs]	[lbs]
30.1	194.1							
40	178.6	142.4						
45	169.3	137.3	116.5					
50	160.7	131.7	112.1	81.3				
60	141.4	118.8	103.3	77.8	54.8			
70	113.2	106.1	95.2	72.9	52.4	38.7		
75	94.7	100.9	90.5	70.8	51.2	37.9	27.0	
85		87.8	81.2	66.5	49.4	36.4	26.0	17.4
105		60.6	65.7	58.1	45.7	33.9	23.8	15.8
125			47.2	49.5	43.0	31.8	22.0	14.4
165				30.9	35.2	28.3	19.1	12.1
200					24.7	25.5	17.4	10.5
240						16.7	15.9	8.9
275							11.5	7.7
315								6.3

Main boom 194 ft | 88°

	Jib [ft]							
Radius	66	95	115	154	194	233	272	312
[ft]	[lbs]	[lbs]	[lbs]	[lbs]	[lbs]	[lbs]	[lbs]	[lbs]
30.8	183.0							
40	167.9	137.7						
45	159.3	133.6	113.6					
50	152.6	128.7	109.7	78.8				
60	138.9	117.2	101.3	75.9	54.1			
70	114.4	105.7	93.8	71.6	51.9	36.6		
75	97.7	100.6	89.9	69.7	50.7	35.9	25.7	
85		88.5	80.8	65.5	48.7	34.8	25.0	17.5
105		61.9	66.0	57.8	45.4	32.6	23.1	16.1
125			48.1	49.8	42.5	30.6	21.3	14.6
165				30.6	35.1	27.3	18.6	12.3
200					24.8	24.7	16.9	10.7
240						17.1	15.5	9.1
275							11.7	7.9
315								6.5

Main boom 213 ft | 88°

	Jib [ft]							
Radius	66	95	115	154	194	233	272	312
[ft]	[lbs]	[lbs]	[lbs]	[lbs]	[lbs]	[lbs]	[lbs]	[lbs]
31.5	169.1							
40	159.3	130.8						
45	151.1	128.6	108.4					
50	144.9	124.1	105.8	75.9				
60	133.4	114.3	98.8	73.7	52.6			
70	114.9	104.2	91.5	69.6	50.8	35.9		
75	100.5	99.4	88.4	68.0	49.8	35.4	25.9	
85		88.8	80.4	64.2	47.8	34.4	25.3	16.2
105		63.4	66.2	57.3	44.6	32.5	23.1	15.4
125			49.1	49.9	41.1	30.3	21.4	14.0
165				32.4	34.4	26.8	18.7	11.9
200					24.4	23.9	17.0	10.3
240						17.2	15.6	8.7
280							11.2	7.4
315								6.2

Main boom 233 ft | 88°

	Jib [ft]				
Radius	105	115	125	135	144
[ft]	[lbs]	[lbs]	[lbs]	[lbs]	[lbs]
40.3	114.4				
45	113.8	104.3	96.1		
50	111.1	102.2	95.0	86.7	80.8
60	104.5	96.9	89.6	81.6	76.8
70	97.4	89.7	83.7	76.7	72.4
80	88.4	82.8	78.6	71.6	67.3
85	85.1	79.3	74.9	69.5	65.2
95	76.7	73.2	69.0	63.3	60.1
100	72.9	69.5	66.6	60.8	57.3
110	63.4	63.2	60.4	56.1	52.9
115	56.8	59.8	57.8	53.5	50.6
125		49.8	52.1	48.9	46.1
135			44.4	44.5	42.3
145				39.5	39.0
155					35.7

TLT 10539958. Above load charts are for reference only. For actual lift duty please refer to load chart in operator's cabin or manual.

https://truckmanualshub.com/

Load capacities in 1000 lbs with luffing jib (No. 1916.xx) | 273,400 lbs rear counterweight and 125,700 lbs carbody counterweight

Main boom 95 ft | 83°

	Jib [ft]							
Radius	66	95	115	154	194	233	272	312
[ft]	[lbs]	[lbs]	[lbs]	[lbs]	[lbs]	[lbs]	[lbs]	[lbs]
41.3	194.5							
50	180.1	147.5						
60	157.8	132.0	116.9					
70	127.9	117.3	104.8	80.7				
80	97.2	104.4	94.4	75.6	56.2			
85	33.4	97.1	88.7	72.5	55.5			
95		83.4	79.9	68.1	53.1	38.8		
105		69.9	70.6	62.3	50.9	37.2	25.7	
110		61.7	66.7	59.8	50.1	36.6	25.1	
130			47.9	50.1	46.6	34.0	23.0	15.4
170				30.8	36.2	29.9	19.8	13.0
205					24.9	26.1	17.9	11.2
245						17.0	16.2	9.5
280							11.6	8.2
320								6.2

Main boom 134 ft | 83°

	Jib [ft]							
Radius	66	95	115	154	194	233	272	312
[ft]	[lbs]	[lbs]	[lbs]	[lbs]	[lbs]	[lbs]	[lbs]	[lbs]
46.1	190.7							
55	178.7	143.4						
65	156.9	129.6	113.4					
75	129.1	115.9	102.7	78.6				
85	99.4	103.4	93.3	73.8	54.5			
90	33.4	96.8	87.9	71.2	53.8			
100		84.2	79.6	67.1	51.8	37.6		
110		71.0	70.8	61.8	49.7	36.2	24.9	
115		62.8	67.1	59.4	48.9	35.7	24.6	
135			48.8	50.1	45.8	33.2	22.5	15.0
175				31.4	36.2	29.6	19.4	12.7
210					25.5	25.9	17.7	11.0
250						17.6	16.0	9.4
285							12.0	8.2
325								6.5

Main boom 174 ft | 83°

	Jib [ft]							
Radius	66	95	115	154	194	233	272	312
[ft]	[lbs]	[lbs]	[lbs]	[lbs]	[lbs]	[lbs]	[lbs]	[lbs]
50.9	186.0							
60	171.7	137.6						
70	148.5	126.5	108.8					
80	126.0	114.3	100.1	75.5				
90	99.6	102.5	92.0	71.4	52.4			
100		89.4	82.4	67.1	50.7	36.5		
115		71.2	70.5	60.9	47.9	35.0	24.2	
120		63.2	66.9	58.8	47.2	34.5	23.8	
125			63.8	57.0	46.6	33.8	23.3	15.6
140			49.3	50.1	44.3	32.2	22.0	14.6
180				31.7	35.8	28.7	19.1	12.4
215					25.7	25.7	17.4	10.8
255						17.7	15.9	9.2
290							12.1	8.0
330								6.5

Main boom 194 ft | 83°

	Jib [ft]							
Radius	66	95	115	154	194	233	272	312
[ft]	[lbs]	[lbs]	[lbs]	[lbs]	[lbs]	[lbs]	[lbs]	[lbs]
53.3	178.5							
65	155.7	131.9						
70	145.7	127.1	107.3					
80	124.9	116.1	100.1	73.6				
95	90.6	99.2	88.0	68.7	51.2			
105		86.0	79.8	64.9	49.4	35.5		
115		75.1	71.9	61.1	47.6	34.5	23.7	
125		33.4	64.9	57.4	46.2	33.4	23.1	
130			61.3	55.9	45.6	32.8	22.6	15.3
140			51.7	51.2	44.1	31.8	21.8	14.6
180				33.9	36.2	28.6	19.0	12.3
220					24.8	25.2	17.1	10.6
255						18.1	15.7	9.3
295							11.9	7.9
330								6.6

Main boom 213 ft | 83°

	Jib [ft]							
Radius	66	95	115	154	194	233	272	312
[ft]	[lbs]	[lbs]	[lbs]	[lbs]	[lbs]	[lbs]	[lbs]	[lbs]
55.7	167.0							
65	149.8	126.4						
75	132.0	119.3	102.3					
85	114.8	109.5	95.3	71.4				
95	96.8	98.6	88.6	68.0	49.5			
105		87.9	80.4	64.3	48.2	34.0		
120		71.1	69.5	59.2	45.8	32.9	22.6	
125		63.1	66.1	57.5	45.1	32.4	22.4	
130			63.2	56.0	44.6	31.8	22.0	15.0
145			49.2	49.6	42.4	30.4	20.8	14.1
185				31.3	35.2	27.3	18.2	12.1
220					25.2	24.9	16.7	10.5
260						17.6	15.3	9.0
295							12.1	7.8
335								6.4

Main boom 233 ft | 83°

	Jib [ft]				
Radius	105	115	125	135	144
[ft]	[lbs]	[lbs]	[lbs]	[lbs]	[lbs]
69.6	109.8				
75	108.3	99.1			
80	105.1	96.9	90.2	81.7	
85	101.1	93.8	87.5	80.3	74.9
90	98.3	90.6	84.7	77.7	72.9
95	93.7	88.3	82.1	75.1	70.7
100	89.7	84.1	80.1	72.8	68.1
110	82.3	77.5	72.9	67.5	64.1
120	74.3	70.5	67.5	61.8	58.1
130	65.1	64.2	61.3	56.8	53.6
140	33.4	56.2	56.4	51.8	48.9
145		51.6	53.2	49.7	46.7
155			46.0	45.4	43.0
165				40.6	39.7
175					36.4

TLT 10539958. Above load charts are for reference only. For actual lift duty please refer to load chart in operator's cabin or manual.

https://truckmanualshub.com/

Load capacities in 1000 lbs with luffing jib (No. 1916.xx) | 273,400 lbs rear counterweight and 125,700 lbs carbody counterweight

Main boom 95 ft | 75°

	Jib [ft]							
Radius	66	95	115	154	194	233	272	312
[ft]	[lbs]	[lbs]	[lbs]	[lbs]	[lbs]	[lbs]	[lbs]	[lbs]
63	167.5							
80	124.7	123.2						
85	115.9	115.2	103.6					
95	97.0	100.8	94.0					
105		88.7	83.7	69.7				
120		70.1	70.4	62.2	50.3			
125		62.5	66.5	59.4	49.4			
145			49.3	49.6	46.0	33.4		
155				45.1	44.6	32.4	21.8	
170				39.1	40.4	30.8	20.6	13.5
180				34.8	37.4	30.0	20.0	13.0
220					26.0	26.1	17.8	11.1
260						18.1	16.0	9.5
295							12.6	8.2
335								5.8

Main boom 134 ft | 75°

	Jib [ft]							
Radius	66	95	115	154	194	233	272	312
[ft]	[lbs]	[lbs]	[lbs]	[lbs]	[lbs]	[lbs]	[lbs]	[lbs]
75	130.3							
90	104.5	103.6						
95	97.9	97.1	96.5					
105	86.7	86.2	85.6					
115		77.3	76.7	68.5				
130		66.7	66.3	61.8	48.8			
135		63.7	63.4	59.2	48.3			
145			58.1	55.4	46.8	33.2		
155			50.6	49.9	45.4	32.5		
180				39.6	40.3	30.3	20.1	13.1
190				35.6	37.4	29.5	19.5	12.6
230					26.7	26.1	17.5	10.8
270						18.7	15.9	9.3
305							13.0	8.2
345								5.9

Main boom 174 ft | 75°

	Jib [ft]							
Radius	66	95	115	154	194	233	272	312
[ft]	[lbs]	[lbs]	[lbs]	[lbs]	[lbs]	[lbs]	[lbs]	[lbs]
85	106.9							
100	88.0	87.0						
105	83.0	82.1	81.4					
115	74.3	73.7	73.0					
125		66.7	66.1	64.8				
140		58.2	57.7	56.5	47.3			
145		55.7	55.3	54.2	46.9			
155			51.0	49.9	45.6	32.1		
165			47.2	46.2	44.4	31.5		
190				38.8	37.7	29.5	19.6	12.6
200				35.9	35.3	28.8	19.1	12.3
240					27.0	25.8	17.1	10.6
280						18.9	15.7	9.2
315							13.1	8.1
355								6.2

Main boom 194 ft | 75°

	Jib [ft]							
Radius	66	95	115	154	194	233	272	312
[ft]	[lbs]	[lbs]	[lbs]	[lbs]	[lbs]	[lbs]	[lbs]	[lbs]
90	97.1							
105	80.7	79.8						
110	76.3	75.5	74.7					
120	68.7	68.0	67.3					
130		61.8	61.2	59.9				
145		54.2	53.6	52.4	46.3			
150		51.9	51.5	50.3	46.1			
160			47.6	46.5	44.9	31.3		
180				40.2	39.0	30.2	19.9	
195				36.3	35.2	29.1	19.1	12.4
205				34.0	33.0	28.4	18.6	12.1
245					26.0	24.8	16.8	10.5
285						19.0	15.5	9.1
320							13.2	8.0
360								6.2

Main boom 213 ft | 75°

	Jib [ft]							
Radius	66	95	115	154	194	233	272	312
[ft]	[lbs]	[lbs]	[lbs]	[lbs]	[lbs]	[lbs]	[lbs]	[lbs]
95	88.3							
110	74.1	73.1						
115	70.3	69.3	68.6					
125	63.5	62.7	62.0					
135		57.2	56.6	55.2				
150		50.3	49.8	48.6	45.1			
155		48.3	47.9	46.7	45.0			
165			44.3	43.2	41.9	30.5		
185				37.4	36.2	29.5	19.6	
200				33.9	32.8	28.5	18.9	12.1
210				31.8	30.7	27.8	18.4	11.9
250					24.2	23.1	16.7	10.3
290						18.5	15.4	9.0
325							13.2	8.0
365								6.2

Main boom 233 ft | 75°

	Jib [ft]				
Radius	105	115	125	135	144
[ft]	[lbs]	[lbs]	[lbs]	[lbs]	[lbs]
115.2	66.4				
120	63.3	62.8			
125	60.3	59.8	59.6		
130	57.5	57.0	56.9	56.4	
135	55.0	54.5	54.4	53.9	53.6
140	52.6	52.1	52.0	51.5	51.3
145	50.4	50.0	49.8	49.4	49.1
150	48.4	48.0	47.8	47.4	47.1
155	46.5	46.1	46.0	45.5	45.3
160	44.7	44.3	44.2	43.8	43.5
170	41.4	41.1	41.0	40.6	40.4
180		38.2	38.2	37.8	37.6
190			35.6	35.3	35.1
200				33.1	32.9
210					30.8

TLT 10539958. Above load charts are for reference only. For actual lift duty please refer to load chart in operator's cabin or manual.

https://truckmanualshub.com/

Luffing jib (No. 2316.xx)

Main boom 88-45°, 66-223 ft | Luffing jib 78-15°, 66-113 ft

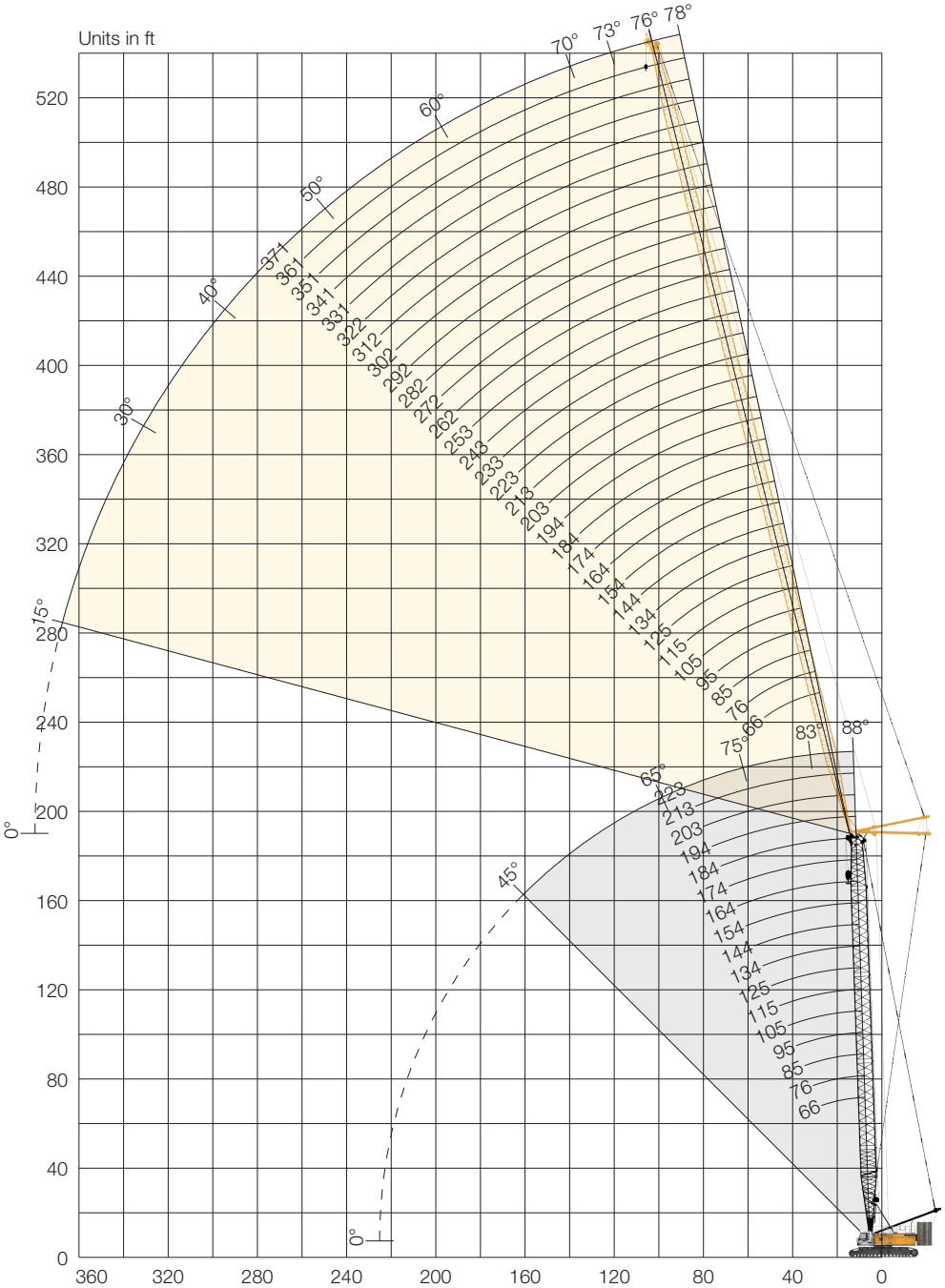

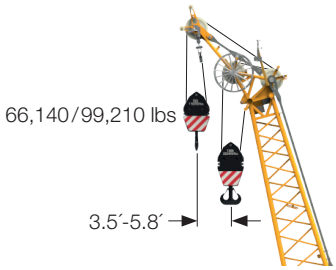

Auxiliary jib 66,140/99,210 lbs (option)
The maximum capacity of the auxiliary jib is 66,140/99,210 lbs . The corresponding load chart is programmed in the LML system.

Max. combination	554 ft
Main boom	184 ft
Luffing jib	370 ft
Max. combination	348 ft
Main boom	223 ft
Luffing jib	125 ft

Jib configuration (No. 2316.xx)

	Length*	Amount of jib sections																																
Jib foot	33 ft	1	1	1	1	1	1	1	1	1	1	1	1	1	1	1	1	1	1	1	1	1	1	1	1	1	1	1	1	1	1	1	1	1
Jib section	10 ft		1		1		1		1		1		1		1		1		1		1		1		1		1		1		1		1	
Jib section	20 ft			1	1			1	1			1	1			1	1			1	1			1	1			1	1			1	1	
Jib section	40 ft					1	1	1	1	2	2	2	2	3	3	3	3	4	4	4	4	5	5	5	5	6	6	6	6	7	7	7	7
Jib head	33 ft	1	1	1	1	1	1	1	1	1	1	1	1	1	1	1	1	1	1	1	1	1	1	1	1	1	1	1	1	1	1	1	1	1
Jib length [ft]		**66**	**76**	**85**	**95**	**105**	**115**	**125**	**134**	**144**	**154**	**164**	**174**	**184**	**194**	**203**	**213**	**223**	**233**	**243**	**253**	**262**	**272**	**282**	**292**	**302**	**312**	**322**	**331**	**341**	**351**	**361**	**371**
Auxiliary jib applicable		✓	✓	✓	✓	✓	✓	✓	✓	✓	✓	✓	✓	✓	✓	✓	✓	✓	✓	✓	✓	✓	✓	✓	✓	✓	✓	✓	✓	✓	✓	✓	

* Actual lengths of boom sections are metric (e.g. 3 m, 6 m, 10 m, 12 m). The figures shown above are approximate conversions to feet.

https://truckmanualshub.com/

Load capacities in 1000 lbs with luffing jib (No. 2316.xx) | 273,400 lbs rear counterweight and 125,700 lbs carbody counterweight

Main boom 66 ft | 88°

	Jib [ft]							
Radius	66	135	174	213	253	292	331	361
[ft]	[lbs]	[lbs]	[lbs]	[lbs]	[lbs]	[lbs]	[lbs]	[lbs]
40.6		207.1						
50		168.4	154.6					
60	139.4	131.1	128.3	110.3				
70	108.3	106.3	103.9	100.4	80.6			
75		97.1	97.0	95.3	79.3	55.1		
85		84.6	81.1	79.2	75.5	53.9	39.0	
90		78.8	75.0	73.7	69.5	52.8	38.5	29.6
120		54.9	53.2	50.3	48.1	46.3	33.9	25.9
140		44.0	43.5	40.0	38.6	36.4	30.6	24.0
180			30.3	29.2	27.8	25.4	23.2	19.9
215				22.3	21.0	18.7	16.1	14.4
255					14.5	13.5	11.1	8.6
290						9.0	7.8	2.8
295							7.2	2.0
330							3.6	

Main boom 105 ft | 88°

	Jib [ft]							
Radius	66	135	184	213	253	292	331	371
[ft]	[lbs]	[lbs]	[lbs]	[lbs]	[lbs]	[lbs]	[lbs]	[lbs]
40	258.0							
50	231.5	194.6						
55	210.8	185.3	134.6					
60	185.0	175.2	132.9	102.9				
70	138.9	151.0	128.5	100.1	75.6			
75	113.5	140.2	125.7	98.5	74.7	50.4		
85		121.4	116.9	94.6	72.5	49.8	37.1	
95		106.0	102.4	90.0	69.9	48.5	36.3	26.2
140		54.5	63.7	60.8	59.2	42.7	30.4	21.8
190			34.1	39.4	39.3	35.6	25.9	18.3
215				28.0	31.5	30.7	24.3	17.0
255					19.6	22.4	19.2	14.9
295						12.0	14.1	5.1
310							11.1	2.1
330							7.0	

Main boom 134 ft | 88°

	Jib [ft]							
Radius	66	135	174	213	253	292	331	371
[ft]	[lbs]	[lbs]	[lbs]	[lbs]	[lbs]	[lbs]	[lbs]	[lbs]
28.7	258.0							
45	245.7	185.5						
55	207.6	178.3	133.9					
60	186.8	170.0	131.6	96.4				
70	147.5	151.3	126.3	94.5	70.4			
80		130.9	121.2	91.2	69.1	50.7		
85		121.5	114.6	89.3	68.3	50.2	35.9	
95		106.0	104.1	86.1	66.2	48.4	35.4	25.2
140		57.6	64.8	61.6	58.0	42.0	29.8	21.3
180			39.2	44.1	43.8	37.0	26.6	18.4
220				27.6	31.3	30.2	23.9	16.4
255					20.8	22.7	19.6	15.1
295						13.1	14.9	5.3
310							11.9	2.4
330							7.9	

Main boom 184 ft | 88°

	Jib [ft]							
Radius	66	135	174	213	253	292	331	371
[ft]	[lbs]	[lbs]	[lbs]	[lbs]	[lbs]	[lbs]	[lbs]	[lbs]
30.4	255.6							
45	227.6	147.6						
55	194.1	143.7	108.8					
65	166.1	133.9	105.3	81.2				
70	154.7	129.2	103.1	80.3	61.0			
75	132.8	124.6	101.0	79.1	61.0			
90		110.3	92.9	74.6	58.6	45.1	32.9	
95		105.3	90.1	73.5	57.5	44.4	32.7	23.4
145		54.5	62.1	57.2	48.7	38.5	27.5	19.6
180			41.0	44.7	42.6	34.8	24.9	17.6
220				28.6	31.8	29.6	22.5	15.8
260					19.0	22.4	18.7	14.0
295						13.4	15.7	5.7
310							12.7	2.8
335							7.6	

Main boom 194 ft | 88°

	Jib [ft]							
Radius	66	135	174	213	253	292	331	341
[ft]	[lbs]	[lbs]	[lbs]	[lbs]	[lbs]	[lbs]	[lbs]	[lbs]
30.8	240.6							
50	203.7	139.9						
55	187.7	136.2	104.5					
65	162.3	127.7	101.2	78.5				
70	151.4	123.5	99.0	77.8	59.3			
80		115.1	94.8	75.3	58.6	44.9		
90		106.1	88.9	72.1	57.0	44.5	32.5	29.6
120		79.7	74.0	63.5	51.4	40.8	29.7	27.2
145		55.5	61.5	55.7	47.2	37.8	27.4	25.1
180			41.7	44.5	40.9	33.9	24.8	22.6
220				29.1	31.9	29.0	22.4	20.4
260					19.1	22.7	18.8	17.6
295						13.7	15.4	14.8
335							7.7	8.4
345								6.4

Main boom 213 ft | 88°

	Jib [ft]		
Radius	66	135	174
[ft]	[lbs]	[lbs]	[lbs]
31.5	214.0		
50	184.6	125.9	
55	173.5	122.5	95.9
60	165.4	118.7	95.0
70	145.8	111.6	91.3
80	33.4	104.0	86.9
90		96.8	81.9
100		90.0	77.8
110		83.7	73.2
120		76.9	68.6
140		61.0	60.9
145		56.1	58.9
160			53.6
180			41.9
185			33.4

Main boom 223 ft | 88°

	Jib [ft]
Radius	125
[ft]	[lbs]
44.1	128.9
50	126.8
60	119.1
70	111.0
80	104.0
90	95.4
95	92.0
100	89.1
105	85.6
110	82.3
115	79.3
120	76.8
125	72.3
130	67.0
135	61.6

TLT 10539958. Above load charts are for reference only. For actual lift duty please refer to load chart in operator's cabin or manual.

https://truckmanualshub.com/

Load capacities in 1000 lbs with luffing jib (No. 2316.xx) | 273,400 lbs rear counterweight and 125,700 lbs carbody counterweight

Main boom 66 ft | 83°

	Jib [ft]							
Radius	66	135	174	213	253	292	331	361
[ft]	[lbs]	[lbs]	[lbs]	[lbs]	[lbs]	[lbs]	[lbs]	[lbs]
37.7	258.0							
60	165.7	162.0						
70	129.7	128.6	120.9					
80	98.6	103.3	103.2					
85		94.8	96.0	94.6				
95		80.6	79.9	80.0	72.4			
105		70.9	69.2	68.3	67.4	49.6		
120		59.4	56.6	56.5	55.9	48.0	33.6	
125		56.7	54.0	53.2	51.9	47.1	33.3	24.6
145		46.2	44.4	41.9	40.8	38.8	31.0	23.2
185			32.1	30.0	29.0	26.2	25.1	20.2
220				23.6	21.8	19.5	17.2	14.9
260					15.9	14.1	11.8	8.9
300						9.8	7.9	
335							4.8	

Main boom 105 ft | 83°

	Jib [ft]							
Radius	66	135	174	213	253	292	331	371
[ft]	[lbs]	[lbs]	[lbs]	[lbs]	[lbs]	[lbs]	[lbs]	[lbs]
42.5	258.0							
65	166.5	164.2						
75	139.3	137.1	134.7					
85	115.2	117.4	116.0					
90		109.4	108.0	96.1				
100		96.2	94.8	91.9	70.4			
110		85.6	84.2	82.8	68.8	47.5		
125		73.2	71.9	70.4	65.6	46.1	32.4	
135		66.6	65.3	63.9	62.4	44.8	31.5	22.0
150		56.1	57.2	55.8	54.3	42.7	30.0	21.0
190			38.3	40.9	39.5	37.3	26.5	18.3
225				29.1	31.0	29.6	24.1	16.6
265					20.5	22.7	19.5	13.6
305						12.9	14.9	4.2
340							7.8	

Main boom 134 ft | 83°

	Jib [ft]							
Radius	66	135	174	213	253	292	331	371
[ft]	[lbs]	[lbs]	[lbs]	[lbs]	[lbs]	[lbs]	[lbs]	[lbs]
46.1	234.2							
70	150.3	147.7						
80	127.3	125.0	123.5					
85	118.1	116.0	114.5					
90		108.1	106.6	92.5				
105		89.5	88.1	86.5	66.7			
115		80.1	78.7	77.1	65.3	46.3		
125		72.3	70.9	69.4	63.5	45.5	31.7	
140		62.9	61.6	60.1	58.5	43.5	30.8	21.3
155		55.3	54.2	52.7	51.2	41.7	29.4	20.3
190			41.6	40.3	38.8	37.2	26.5	18.0
230				29.5	29.5	28.0	23.9	16.1
270					20.9	21.5	19.6	13.1
305						14.7	15.8	5.0
345							8.1	

Main boom 184 ft | 83°

	Jib [ft]							
Radius	66	135	174	213	253	292	331	371
[ft]	[lbs]	[lbs]	[lbs]	[lbs]	[lbs]	[lbs]	[lbs]	[lbs]
52.1	195.3							
75	135.0	128.3						
85	115.7	113.2	104.0					
95	100.8	98.7	97.0					
100		92.7	91.1	81.0				
110		82.5	80.9	77.6	60.1			
120		74.2	72.6	71.0	59.1	42.7		
130		67.2	65.7	64.1	57.4	42.3	29.6	
160		51.8	50.6	49.0	47.4	39.1	27.6	19.4
200			33.4	36.3	34.8	33.1	24.8	17.0
235				28.9	27.5	26.0	22.7	15.5
275					20.9	19.9	18.1	13.2
310						14.6	14.4	5.3
325							12.9	2.5
350							8.5	

Main boom 194 ft | 83°

	Jib [ft]						
Radius	66	135	174	213	253	292	331
[ft]	[lbs]	[lbs]	[lbs]	[lbs]	[lbs]	[lbs]	[lbs]
53.3	186.2						
75	134.3	123.8					
85	115.1	112.5	100.6				
95	100.3	98.1	96.2				
100		92.1	90.5	78.5			
110		82.0	80.4	75.9	58.6		
120		73.7	72.1	70.5	57.8	42.2	
135		63.8	62.3	60.7	55.6	41.4	29.3
160		51.5	50.2	48.7	47.1	38.7	27.5
200			37.4	36.1	34.5	32.4	24.8
235				28.6	27.2	25.7	22.7
275					21.1	19.7	17.6
315						14.0	13.7
340							10.3
360							

Main boom 213 ft | 83°

	Jib [ft]		
Radius	66	135	174
[ft]	[lbs]	[lbs]	[lbs]
55.7	170.9		
80	122.7	114.5	
90	106.2	102.7	93.0
95	99.3	96.8	91.1
100		90.9	87.0
110		80.9	79.3
120		72.7	71.1
130		65.9	64.4
140		60.1	58.6
150		55.2	53.7
160		50.8	49.5
165		48.8	47.6
180			42.5
190			39.5
200			36.9

Main boom 223 ft | 83°

	Jib [ft]
Radius	125
[ft]	[lbs]
74.2	116.7
75	116.5
80	113.9
90	101.6
100	90.9
110	80.9
115	76.6
120	72.8
125	69.2
130	66.0
135	63.0
140	60.2
145	57.6
150	55.2
155	53.0

TLT 10539958. Above load charts are for reference only. For actual lift duty please refer to load chart in operator's cabin or manual.

https://truckmanualshub.com/

Load capacities in 1000 lbs with luffing jib (No. 2316.xx) | 273,400 lbs rear counterweight and 125,700 lbs carbody counterweight

Main boom 66 ft | 75°

	Jib [ft]							
Radius	66	135	174	213	253	292	331	361
[ft]	[lbs]	[lbs]	[lbs]	[lbs]	[lbs]	[lbs]	[lbs]	[lbs]
60	181.2							
85	117.3	115.1						
105		85.0	84.2					
120		68.8	68.1	65.1				
135		58.9	55.7	55.7	50.2			
155		47.1	45.7	43.8	42.7	38.6		
170			40.0	37.8	36.3	34.5	28.3	
180			36.7	34.6	32.4	32.7	27.6	20.6
195			33.0	31.0	30.0	28.3	25.0	20.1
200				30.7	28.8	26.8	24.3	19.7
230				24.1	22.4	20.1	17.9	15.8
270					16.2	14.2	11.9	10.0
305						10.6	8.3	6.2
345							5.4	3.6
370								2.2

Main boom 105 ft | 75°

	Jib [ft]							
Radius	66	135	174	213	253	292	331	371
[ft]	[lbs]	[lbs]	[lbs]	[lbs]	[lbs]	[lbs]	[lbs]	[lbs]
70	144.8							
95	99.4	96.8						
100	93.3	90.9						
115		76.6	75.0					
130		65.9	64.3	62.7				
145		57.6	56.1	54.4	52.8			
165		48.9	47.6	46.0	44.3	41.5		
180			42.5	40.9	39.3	37.6	27.7	
195			38.2	36.7	35.1	33.5	26.9	18.3
205			33.4	34.2	32.7	31.1	26.1	18.1
240				27.3	25.8	24.3	22.6	16.4
280					20.0	18.6	17.0	14.5
315						14.8	13.3	5.2
330							11.9	2.1
355							9.1	

Main boom 134 ft | 75°

	Jib [ft]							
Radius	66	135	174	213	253	292	331	371
[ft]	[lbs]	[lbs]	[lbs]	[lbs]	[lbs]	[lbs]	[lbs]	[lbs]
75	129.1							
105	85.5	82.8						
120		70.3	68.5					
140		58.1	56.4	54.7				
155		51.1	49.6	47.9	46.1			
170		45.4	44.0	42.3	40.6	38.9		
175		33.4	42.4	40.7	39.0	37.3		
190			38.0	36.4	34.7	33.1	27.0	
205			34.2	32.8	31.2	29.5	26.3	17.5
210			33.1	31.7	30.1	28.4	25.9	17.5
250				24.4	23.0	21.3	19.6	15.7
285					18.3	16.8	15.2	12.7
325						12.8	11.3	4.7
335							10.5	2.6
365							8.2	

Main boom 184 ft | 75°

	Jib [ft]							
Radius	66	135	174	213	253	292	331	371
[ft]	[lbs]	[lbs]	[lbs]	[lbs]	[lbs]	[lbs]	[lbs]	[lbs]
90	97.0							
115	72.0	66.4						
120	68.2	65.3						
135		56.4	54.5					
150		49.4	47.6	45.7				
165		43.8	42.1	40.2	37.9			
185		37.6	36.1	34.4	32.5	29.3		
200			32.5	30.9	29.1	26.1	22.9	
215			29.4	27.8	26.0	23.3	20.2	16.5
225			27.5	26.0	24.3	21.7	18.7	15.6
260				20.7	19.1	17.0	14.1	11.2
300					14.6	13.1	10.3	7.6
340						9.7	7.4	3.0
345							7.0	2.3
375							4.6	

Main boom 194 ft | 75°

	Jib [ft]						
Radius	66	135	174	213	253	292	331
[ft]	[lbs]	[lbs]	[lbs]	[lbs]	[lbs]	[lbs]	[lbs]
90	95.6						
120	67.3	64.1					
135		55.4	53.5				
155		46.6	44.8	42.9			
170		41.4	39.6	37.8	35.1		
185		37.0	35.4	33.6	31.3	27.9	
190		33.4	34.1	32.4	30.2	26.9	
205			30.8	29.1	27.1	24.0	20.8
220			27.8	26.2	24.5	21.4	18.4
225			26.9	25.4	23.6	20.7	17.6
265				19.5	17.9	15.6	12.7
300					14.2	12.4	9.6
340						9.0	6.8
380							3.7
390							

Main boom 213 ft | 75°

	Jib [ft]		
Radius	66	135	174
[ft]	[lbs]	[lbs]	[lbs]
95	86.7		
125	62.0	58.7	
140		51.0	49.0
150		46.7	44.8
160		43.0	41.2
170		39.8	38.0
180		36.9	35.2
190		34.3	32.7
195		33.1	31.6
200			30.5
210			28.5
215			27.5
220			26.6
225			25.7
230			24.9

Main boom 223 ft | 75°

	Jib [ft]
Radius	125
[ft]	[lbs]
120.9	60.6
125	58.2
130	55.4
135	52.9
140	50.5
145	48.4
150	46.3
155	44.5
160	42.7
165	41.0
170	39.5
175	38.0
180	36.6
185	35.3

TLT 10539958. Above load charts are for reference only. For actual lift duty please refer to load chart in operator's cabin or manual.

https://truckmanualshub.com/

LR 1300.1 SX — 13130395 — Version 01 — 03/2019 Subject to change without notice.

Liebherr-Werk Nenzing GmbH
Dr. Hans Liebherr Str. 1, 6710 Nenzing/Austria
Tel.: +43 50809 41-473, Fax: +43 50809 41-499
crawler.crane@liebherr.com, www.liebherr.com
facebook.com/LiebherrConstruction

Liebherr Nenzing Crane Co.
7075 Bennington Street, Houston, TX 77028-5812
Tel.: (713) 636-4050, Fax: (713) 636-4051
crawler.crane@liebherr.com, www.liebherr.com
facebook.com/LiebherrConstruction