https://truckmanualshub.com/

Magaziner
Lager- und Fördertechnik

Made in the Lüneburger Heide

ORDER PICKING AND NARROW AISLE TRUCK

THE NEW EK-SERIES

https://truckmanualshub.com/

INNOVATIVE. ECONOMICAL. RELIABLE.

SYSTEMS APPROACH TO WAREHOUSE LOGISTICS

Innovative engineering must incorporate creative design with functionality and maintenance. On the one hand, the vehicles must meet rigorous industrial standards, on the other they must be flexible enough to meet the space and material transport requirements of the individual customer. Introducing the compact, powerful, manoeuvrable – and above all adaptable EK series of Man-Up Turret Trucks: EK 1100, EK 1200, EK 1300, EK 1350, EK 1500, EK 2000.

The perfect solution for unit load storage and individual article order selection. Since the operator rides up with the load to the desired storage location, he is afforded an equally good view of the load and its rack destination. Thanks to a thorough design concept and modular engineering, the adaptation to customer specific transport needs are made simple. The EK series offers optimum space utilization. EK models start with a minimum frame width of only 1.000 mm and can handle lift heights up to 19 m. Capacities range from 1.100 kg to 2.000 kg.

An ergonomically designed vehicle fitted with a spacious operator cabin is built for peak and enduring performance. Cutting edge technology keeps the EK operating at high performance with minimum maintenance costs. Many different operator style consoles and cabins are available to suit the application.

Allow us to compare!

AND PROVIDE A SOLUTION FOR YOUR APPLICATION!

7 MODELS TO MEET YOUR NEEDS.

EK 1100
Capacity to 1.100 kg
Lift Heights to 9 m
2 Stage or 3 Stage Masts
AC Drive Controls
48 Volt or 80 Volt

EK 1350
Capacity to 1.350 kg
Lift Heights to 12 m
2 Stage or 3 Stage Masts
AC Drive Controls
80 Volt

EK 1500 XL
Capacity to 1.500 kg
Lift Heights to 17 m
2 Stage or 3 Stage Masts
AC Drive Controls
80 Volt

EK 2000*
Capacity to 2.000 kg
Lift Heights to 15 m
2 Stage or 3 Stage Masts
AC Drive Controls
80 Volt
*EK 2000 HL for very heavy application EK 2000 XL for Lift Heights up to 19 m with 2 Stage Mast

EK 1200
Capacity to 1.200 kg
Lift Heights to 10 m
2 Stage or 3 Stage Masts
AC Drive Controls
48 Volt or 80 Volt

EK 1500
Capacity to 1.500 kg
Lift Heights to 15 m
2 Stage or 3 Stage Masts
AC Drive Controls
80 Volt

EK 1300
Capacity to 1.300 kg
Lift Heights to 10 m
2 Stage or 3 Stage Masts
AC Drive Controls
48 Volt or 80 Volt

Visit our website for a lot of information about our company and our products.
www.magaziner.de

https://truckmanualshub.com/

COMFORTABLE. SAFE. EFFICIENT.

ERGONOMICAL AND COMFORTABLE

A comfortable and safe work environment enhances operator efficiency. The spacious cabin, carpet covered walls, thick cushioned floor, and built-in document / tool holders provide the basics and also allow for a large range of movement for the order picking process. The multifunctional control console houses an easy to read graphics display and the easy reach operational controls. The layout of the control centre is intuitive and simple to understand. The enclosed secure cabin protects the operator from harm. Naturally the control centre can be reached from a standing or sitting position. The control centre is positioned to suit the individual operator. An extensive list of available options include a choice of seats with features such as air cushioned, lumbar adjustable support with tilting arm rests, downward folding seat cushion with standing operator back support and more. A large rear cabin window and angled motor compartment give an operator excellent visibility.

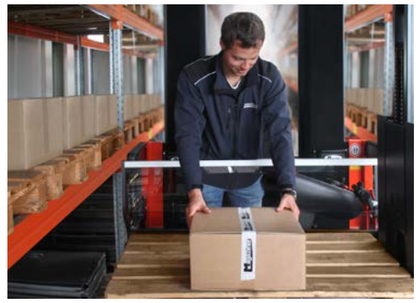

OPTIONS

- Swivel seat
- Air suspensiom seat
- Lenghten cabin
- LED-Power-Lighting Strip
- Swivel side gates
- Tilting panel
- Cold store cabin

FOR EVERY REQUIREMENT – THE RIGHT CONSOLE.

CONSOLE WITH BALL HANDLE BAR

Ergonomic operation with multifunction bar and duplicate controls

CONSOLE-OPTIONS

CONSOLE WITH TWIST CONTROLS

Operation with rotary switch and duplicate controls

OPERATION WITH JOY STICK CONTROLS

Standard Version

MULTIFUNCTION CONTROL HANDLE

For fast operation with joy stick

SPLIT OPERATION CONSOLE NEXT TO THE SEAT

Clear access for order picking or if a gate is needed at the front

OPTIONS

- PIN-Code-Access for up to 10 users
- Service interval indication
- CAN-Bus connection for external input devices
- Lift height indication with positioning system

https://truckmanualshub.com/

STRONG. LIGHT WEIGHT. ROBUST.

COMPUTER OPTIMIZED FOR MAXIMUM PRODUCTIVITY

MAST IN SGO-CONSTRUCTION

The patented design provides for maximum stability while maintaining lower production weights. This allows greater lift heights and higher performance while minimizing energy consumption. The specially designed stronger yet lighter weight mast ensures that the trucks centre of gravity remains low for better stability. Two stage and three stage masts both provide excellent visibility through the unique bracing system. The three stage mast is also available with or without a full free lift option.

OPTIONS

- Special closed heights
- Full free lift
- Closed inner mast

LOAD HANDLING DEVICES FOR EVERY APPLICATION

The Telescopic Fork Attachment can operate in smaller aisles, but must use single sided or skid type pallets and cannot pick up or deposit from the floor. The 180 degree rotating fork (turret) attachment is the most popular and most flexible attachment. Styles include designs for very heavy duty applications – including very long, wide or heavy loads. We offer a turret attachment that is built to suit the application.

OPTIONS

- Low height of telescopic forks (190 mm)
- Initial lift as two stage mast with full free lift
- Hydraulic fork adjustment
- Side shifter
- Weight indicator
- Telescopic forks for double deep stacking
- Simultaneous lift of initial and cabin lift
- Automatic stacking system

https://truckmanualshub.com/

ECONOMICAL. PRECISE. SERVICE FRIENDLY.

WELL PROTECTED SOPHISTICATED DRIVE SYSTEM

All EK series trucks, from the small EK 1100 to the heavy duty EK 2000 are fitted with AC controls. The EK 1100 to EK 1300 are available with either 48 V or 80 V electrical systems. While the larger models are all 80 V units. Minimum energy usage, high throughput and long life cycles are very important. Because of that we utilize the finest components to bring you the most productive and safest truck available. The EK series demonstrates the use of the latest technology available in forklift design, to allow the use of lighter chassis, cabins and masts while actually increasing vehicle stability. This provides the best possible use of energy consumption and maximizes operational cycles, allowing these trucks to operate with smaller batteries – or last longer per battery cycle.

HIGHLIGHTS

- 4th Generation AC-Technology, 40% less heat loss
- Microcontroller with "Solid State Technology"
- Fast diagnostic without any special tools
- Tidy motor compartment with strong steel doors

OPTIONS

- Copper Rotor Technology for up to 7% more efficiency and lift speeds up to 0,6 m/s
- Zone Detection by RFID Technology
- Wire guidance
- Complete automation

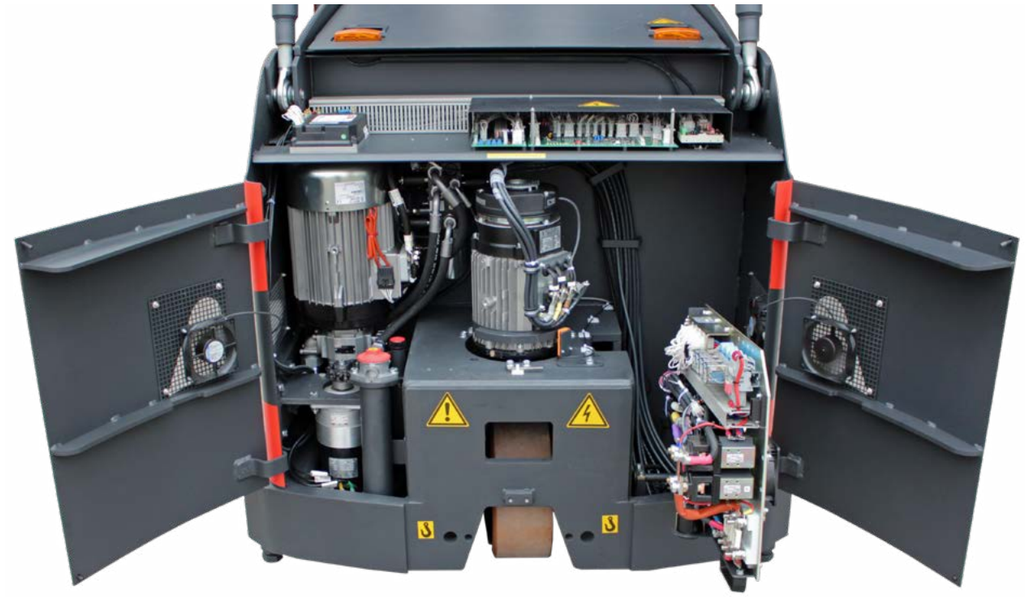

INTELLIGENT ASSISTENCE SYSTEMS

POSITION ASSISTENCE SYSTEM

The Position Assistence System allows precise navigation in VNA warehouses. Any storage or retrieval order is processed semi-automatically using otimal driving profiles. For the fine positioning at the target slot, the driver can dynamicallly choose between automatic or manual operation. With low implementation costs, a performance increase of up to 30% can be achieved.

ACTIVE TILTING ADJUSTMENT

The Active Tilting Adjustment counteracts the excitation of lift mast vibration due to ground irregularities and thereby increases comfort and productivity of the truck. By means of dynamic load wheel adjustment, the system ensures a constant insertion depth and thus minimizes the control effort for the driver.

VICINITY ASSISTANT

The Vicinity Assistant ensures a perfect all-around visibility with a powerful camera system and guarantees safe operation at any time in VNA warehouses. Risk of injuries as well as of damages to the pallet rack and stored goods, are minimized and the warehouse performance is significantly increased due to faster aisle changes.

https://truckmanualshub.com/

Magazliner
Lager- und Fördertechnik

ORDER PICKING AND NARROW AISLE TRUCK
with AC-Technology

		EK 1100	EK 1200	EK 1300	EK 1350	EK 1500	EK 1500 XL	EK 2000
Load capacity	Q	1.100 kg	1.200 kg	1300 kg	1.350 kg	1.500 kg	1.500 kg	2.000 kg
Load centre	C	600 mm	600 mm	600 mm	600 mm	600 mm	600 mm	600 mm
Power supply		Electrical	Electrical	Electrical	Electrical	Electrical	Electrical	Electrical
Operator type		Stand-on/Rider seated	Stand-on/Rider seated	Stand-on/Rider seated	Stand-on/Rider seated	Stand-on/Rider seated	Stand-on/Rider seated	Stand-on/Rider seated
Tyres		Polyurethan	Polyurethan	Polyurethan	Polyurethan	Polyurethan	Polyurethan	Polyurethan
Number of wheels, drive/load side (× = driven)		1×/2	1×/2	1×/2	1×/2	1×/2	1×/2	1×/2
Lowered platform height	h8	400 mm	400 mm	400 mm	400 mm	400 mm	400 mm	400 mm
Inside height of cabin		2.130 mm	2.130 mm	2.130 mm	2.130 mm	2.130 mm	2.130 mm	1.930 mm
Lift height	h3G+s	see table	see table	see table	see table	see table	see table	see table
Supplementary lift	h2	1.900 mm	1.900 mm	1.900 mm	1.900 mm	1.900 mm	1.900 mm	1.500 mm
Picking height	h9	h12 + 1600 mm	h12 + 1600 mm	h12 + 1600 mm	h12 + 1600 mm	h12 + 1600 mm	h12 + 1600 mm	h12 + 1600 mm
Fork dimensions		40/120 mm	40/120 mm	40/120 mm	40/120 mm	40/120 mm	40/120 mm	40/120 mm
Fork length		800 – 1.300 mm	800 – 1.300 mm	800 – 1.300 mm	800 – 1.300 mm	800 – 1.300 mm	800 – 1.300 mm	800 – 1.300 mm
Width across forks (fork carrier width 580/850 mm)	B3	530/505 – 795 mm	530/505 – 795 mm	530/505 – 795 mm	530/505 – 795 mm	530/505 – 795 mm	530/505 – 795 mm	240 – 795 mm
Height of fork, low position	s	80 mm	80 mm	80 mm	80 mm	80 mm	80 mm	80 mm
Overall length with fork carrier width 850 mm	L	3.275 – 3.365 – 3.465 mm	3.335 – 3.425 – 3.525 mm	3.400 – 3.490 – 3.590 mm	3.375 – 3.465 – 3.565 mm	3.650 – 3.740 – 3.840 mm	3.650 – 3.740 – 3.840 mm	3.740 – 3.840 mm
Overall length with fork carrier width 580 mm	L	3.140 – 3.230 – 3.330 mm	3.200 – 3.290 – 3.390 mm	3.265 – 3.355 – 3.455 mm	3.240 – 3.330 – 3.430 mm	3.515 – 3.605 – 3.705 mm	3.515 – 3.605 – 3.705 mm	3.605 – 3.705 mm
Support boom length (standard)	M1S	460 – 550 – 650 mm	460 – 550 – 650 mm	460 – 550 – 650 mm	460 – 550 – 650 mm	460 – 550 – 650 mm	460 – 550 – 650 mm	550 – 650 mm
Overhang	X/X1	355/255 mm	355/255 mm	355/255 mm	365/255 mm	360/270 mm	360/270 mm	360/270 mm
Overall width	B	1.000 – 1.700 mm	1.200 – 1.700 mm	1.200 – 1.700 mm	1.200 – 1.700 mm	1.200 – 1.700 mm	1.600 – 1.900 mm	1.200 – 1.700 mm
Height of mast retracted	h1	see table	see table	see table	see table	see table	see table	see table
Height of cabin extended	h6	see table	see table	see table	see table	see table	see table	see table
Height of mast extended	h4	see table	see table	see table	see table	see table	see table	see table
Turning radius	Wa	2.080 mm	2.145 mm	2.210 mm	2.170 mm	2.445 mm	2.445 mm	2.445 mm
Aisle width	Ast	1.200 -2.000 mm	1.400 – 2.000 mm	1.400 – 2.000 mm	1.400 – 2.000 mm	1.400 – 2.000 mm	1.800 – 2.100 mm	1.400 – 2.000 mm
Travel speed laden/unladen		12,0/12,0 km/h	12,0/12,0 km/h	12,0/12,0 km/h	12,0/12,0 km/h	12,0/12,0 km/h	12,0/12,0 km/h	12,0/12,0 km/h
Lift speed laden/unladen		0,32/0,40 m/s*	0,31/0,40 m/s*	0,52/0,56 m/s*	0,49/0,52 m/s*	0,48/0,52 m/s*	0,42/0,45 m/s	0,45/0,54 m/s
Lowering speed laden/unladen		0,45/0,45 m/s	0,45/0,45 m/s	0,45/0,45 m/s	0,45/0,45 m/s	0,45/0,45 m/s	0,45/0,45 m/s	0,45/0,45 m/s
Reach speed laden/unladen (adjustable)		max. 0,45/0,45 m/s	max. 0,45/0,45 m/s	max. 0,45/0,45 m/s	max. 0,45/0,45 m/s	max. 0,45/0,45 m/s	max. 0,45/0,45 m/s	0,20/0,20 m/s
Weight including battery		4.900 – 5.600 kg	4.950 – 5.800 kg	5.050 – 5.900 kg	5.800 – 6.900 kg	7.100 – 8.700 kg	8.900 – 9.400 kg	7.400 – 8.900 kg
Axle load with load, drive side/load side		1.600/4.400; 1.850/4.850 kg	1.650/4.500; 1.900/5.100 kg	1.700/4.650; 2.000/5.200 kg	1.800/5.300; 2.050/6.150 kg	2.300/6.300; 2.950/7.250 kg	3.000/7.400; 3.100/7.800 kg	2.100/7.300; 2.700/8.200 kg
Axle load without load, drive side/load side		2.100/2.800; 2.400/3.200 kg	2.150/2.800; 2.450/3.350 kg	2.250/2.800; 2.550/3.350 kg	2.400/3.400; 2.700/4.200 kg	2.900/4.200; 3.550/5150 kg	3.500/5.400; 3.700/5.700 kg	3.000/4.400; 3.400/5.400 kg
Tyres, number, drive side/load side		1/2	1/2	1/2	1/2	1/2	1/2	1/2
Tyres dimension drive side		343/140 mm	343/140 mm	343/140 mm	343/140 mm	381/152 mm	381/152 mm	381/152 mm
Tyres dimension load side		343/140 mm	343/140 mm	343/140 mm	377/178 mm	377/178 mm	377/178 mm	377/178 mm
Wheel base	y	1.780 mm	1.845 mm	1910 mm	1.880 mm	2.140 mm	2.140 mm	2.140 mm
Ground clearence	m2	40 mm	40 mm	40 mm	40 mm	40 mm	40 mm	40 mm
Operating brake		electro-magnetic	electro-magnetic	electro-magnetic	electro-magnetic	electro-magnetic	electro-magnetic	electro-magnetic
Parking brake		dead man's brake	dead man's brake	dead man's brake	dead man's brake	dead man's brake	dead man's brake	dead man's brake
Battery		DIN 43531 B	DIN 43531 B	DIN 43536 A	DIN 43536 A	DIN 43536 A	DIN 43536 A	DIN 43536 A
Battery voltage/capacity		48 Volt/775 Ah**, ***	48 Volt/930 Ah**, ***	80 Volt/620 Ah***	80 Volt/ 465 Ah***	80 Volt/ 775 Ah***	80 Volt/ 775 Ah***	80 Volt/775 Ah***
Battery weight		1.118 kg	1.309 kg	1.558 kg	1.238 kg	1.862 kg	1.862 kg	1.862 kg
Drive motor		5,0 kW	5,0 kW	7,0 kW	7,0 kW	7,0 kW	7,0 kW	7,0 kW
Lift motor		12,5 kW*	12,5 kW*	21,0 kW*	21,0 kW*	21,0 kW*	28,0 kW	28,0 kW
Drive/lift control		AC-Control	AC-Control	AC-Control	AC-Control	AC-Control	AC-Control	AC-Control

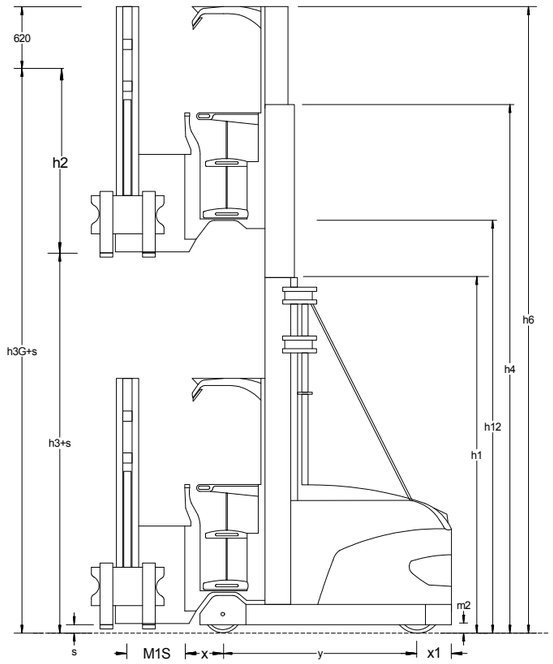

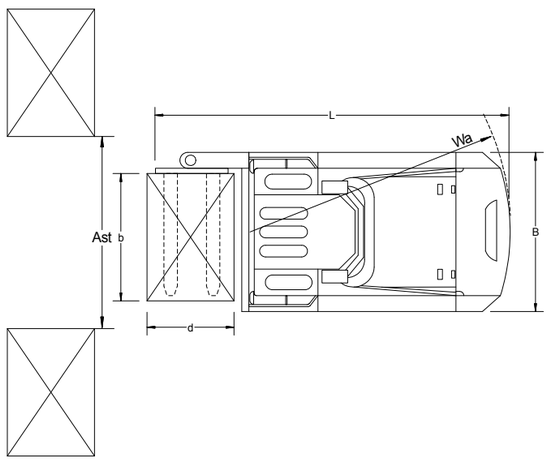

*Higher lift speeds on request, **also in 80 Volt available, ***other capacities on request.

E&OE 09/2018

https://truckmanualshub.com/

Table 1: Build and lift heights of duplex lift mast with swivel fork, Supplementary lift 1.900 mm or 2.300 mm

Total lift height with 1.900 mm suppl. lift	Total lift height with 2.300 mm suppl. lift	Cabin lift height	Raised platform height	Extended height cabin**	Closed height EK 1100 to 1300 two-stage-mast*	Closed height EK 1350/1500 two-stage-mast*	Closed height EK 1500 XL two-stage-mast	Closed height EK 2000 two-stage-mast***
h3G + s	h3G + s	h3 + s	h12	h6	h1	h1	h1	h1
mm	mm	mm	mm	mm	mm	mm	mm	mm
4.400	4.800	2.500	2.820	5.020	2.600	–	–	–
4.900	5.300	3.000	3.320	5.520	2.745	–	–	–
5.400	5.800	3.500	3.820	6.020	2.995	2.920	–	3.170
5.900	6.300	4.000	4.320	6.520	3.245	3.170	–	3.420
6.400	6.800	4.500	4.820	7.020	3.495	3.420	–	3.670
6.900	7.300	5.000	5.320	7.520	3.745	3.670	–	3.920
7.400	7.800	5.500	5.820	8.020	3.995	3.920	–	4.170
7.900	8.300	6.000	6.320	8.520	4.245	4.170	–	4.420
8.400	8.800	6.500	6.820	9.020	4.495	4.420	–	4.670
8.900	9.300	7.000	7.320	9.520	4.745	4.670	–	4.920
9.400	9.800	7.500	7.820	10.020	4.995	4.920	–	5.170
9.900	10.300	8.000	8.320	10.520	5.245	5.170	–	5.420
10.400	10.800	8.500	8.820	11.020	–	5.420	–	5.670
10.900	11.300	9.000	9.320	11.520	–	5.670	–	5.920
11.400	11.800	9.500	9.820	12.020	–	5.920	–	6.170
11.900	12.300	10.000	10.320	12.520	–	6.170	–	6.420
12.400	12.800	10.500	10.820	13.020	–	6.420	–	6.670
12.900	13.300	11.000	11.320	13.520	–	6.670	–	6.920
13.400	13.800	11.500	11.820	14.020	–	6.920	–	7.170
13.900	14.300	12.000	12.320	14.520	–	7.170	7.420	–
14.400	14.800	12.500	12.820	15.020	–	–	7.670	–
14.900	15.300	13.000	13.320	15.520	–	–	7.920	–
15.400	15.800	13.500	13.820	16.020	–	–	8.170	–
15.900	16.300	14.000	14.320	16.520	–	–	8.420	–

*EK 1100 maximum closed height 4.745 mm; *EK 1350 maximum closed height 6.170 mm; other closed/lift heights on request.
**Extended height with 2.300 mm suppl. lift + 600 mm; ***EK 2000 reduced total lift heights, supplementary lift = 1.500 mm; other heights on request.

Table 2: Build and lift heights of triplex lift mast with swivel fork, Supplementary lift 1.900 mm or 2.300 mm

Total lift height with 1900 mm suppl. lift	Total lift height with 2300 mm suppl. lift	Cabin lift height	Raised platform height	Extended height cabin**	Closed height EK 1100 to 1300 three-stage-mast*	Closed height EK 1350/1500 three-stage-mast	Closed height EK 1500 XL three-stage-mast
h3G + s	h3G + s	h3 + s	h6	h6	h1	h1	h1
mm	mm	mm	mm	mm	mm	mm	mm
5.650	6.050	3.750	4.070	6.270	2.600	–	–
6.400	6.800	4.500	4.820	7.020	2.745	–	–
7.150	7.550	5.250	5.570	7.770	2.995	2.920	–
7.900	8.300	6.000	6.320	8.520	3.245	3.170	–
8.650	9.050	6.750	7.070	9.270	3.495	3.420	–
9.400	9.800	7.500	7.820	10.020	3.745	3.670	–
10.150	10.550	8.250	8.570	10.770	3.995	3.920	–
10.900	11.300	9.000	9.320	11.520	–	4.170	–
11.650	12.050	9.750	10.070	12.270	–	4.420	–
12.400	12.800	10.500	10.820	13.020	–	4.670	4.920
13.150	13.550	11.250	11.570	13.770	–	4.920	5.170
13.900	14.300	12.000	12.320	14.520	–	5.170	5.420
14.650	15.050	12.750	13.070	15.270	–	5.420	5.670
15.400	15.800	13.500	13.820	16.020	–	–	5.920
16.150	16.550	14.250	14.570	16.770	–	–	6.170

*EK 1100 maximum closed height 3.495 mm; **extended height with 2.300 mm suppl. lift + 400 mm; other closed/lift heights on request.
The overall length with triplex mast: EK 1100/1200/1300 is 35 mm longer; EK 1350/1500 is 125 mm longer; EK 1350 closed height > 4.170 mm same lenght as EK 1500.

Table 3: Aisle width depending on load/pallet dimensions

Load dimension		Distance between loads**	Boom length	EK 1100 Transfer aisle width*	EK 1200/1300 Transfer aisle width*	EK 1350 Transfer aisle width*	EK 1500/2000 Transfer aisle width*
depth	width						
b	d	Ast	M1S				
mm	mm	mm	mm	mm	mm	mm	mm
1.240	835	1.700	460	3.480	3.530	3.595	3.820
1.200	800	1.650	460	3.460	3.510	3.575	3.800
1.200	1.000	1.650	550	3.540	3.600	3.655	3.890
1.200	1.200	1.650	650	3.630	3.690	3.745	3.980
1.000	800	1.450	460	3.380	3.440	3.495	3.730
1.000	1.000	1.450	550	3.460	3.520	3.585	3.820
1.000	1.200	1.450	650	3.560	3.610	3.675	3.910
800	800	1.400	460	3.360	3.420	3.485	3.710
800	1.000	1.400	550	3.450	3.500	3.565	3.800
800	1.200	1.400	650	3.540	3.600	3.655	3.900
835	1.240	1.400	650	3.540	3.600	3.655	3.900

*Transfer aisle width without load and 580 mm fork carriage width, with mechanical guidance + 300 mm, with wire guidance + 800 mm recommended.
Aisle width for mechanical guidance and duplex mast; Reduced truck lengths on request. ** EK 2000 + 50 mm

Magaziner Lager- und Fördertechnik GmbH | Hützeler Straße 22 – 24 D–29646 Bispingen | Fon +49 5194 894 Fax +49 5194 898 | E-Mail: info@magaziner.de www.magaziner.de

09/2018 Designed by Cmos GmbH