https://truckmanualshub.com/

GM1700

3-Unit Mid-Mount Rotary Mower

Owner's Operating Manual

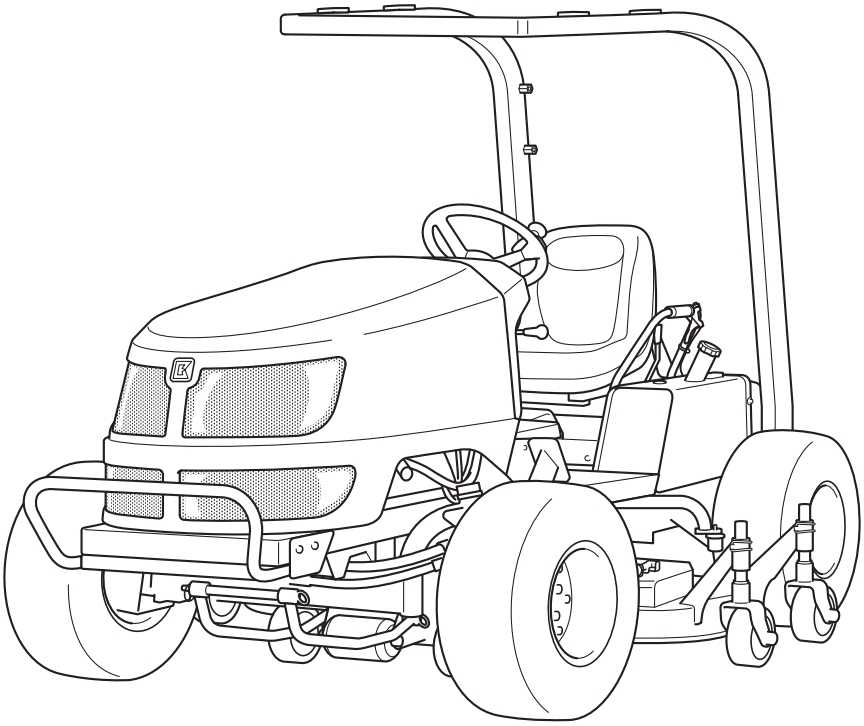

"Required reading" Read this manual and the Owner's Manual for the engine before using the machine.

BARONESS®

Quality on Demand

Serial No. 20328-

Original Instructions Ver.1.1

https://truckmanualshub.com/

Greeting

Thank you for purchasing the Baroness machine. This manual explains proper handling, adjustment, and inspection of your machine. Prior to use, carefully read this manual to thoroughly understand the contents for safe and correct operation.
We hope you will use the machine safely, and take advantage of its best performance.

Keeping the Owner's Operating Manual

Keep this Manual in the box on the hydraulic tank.

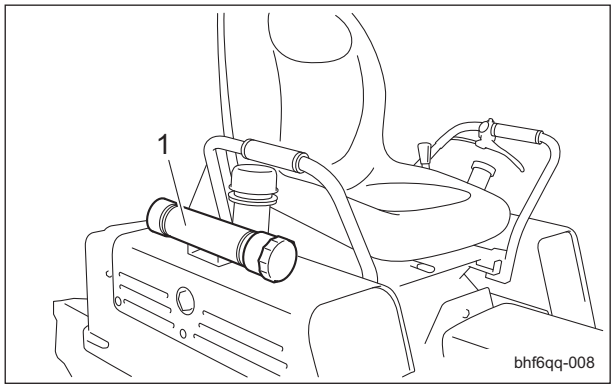

Keeping the Owner's Operating Manual_001

1	Box

https://truckmanualshub.com/

Introduction

Read this manual carefully to ensure that you thoroughly understand how to properly operate and maintain this machine, and to avoid causing injury to yourself or others.

The operator is responsible for operating the machine properly and safely.

Do not perform maintenance on the machine other than that described in this manual.

Be sure to also read the operating manuals for the engine, battery, etc.

Maintenance should only be performed by a certified specialist.

If you have any questions concerning maintenance or genuine parts, please contact your local Baroness dealer or Kyoeisha.

When making inquiries about this machine, please specify the machine's model designation and serial number.

When loaning or transferring this machine, please also provide this manual together with the machine.

Kyoeisha Co., Ltd.

Caution

The information described in this manual is subject to change for improvement without prior notice.
When replacing parts, be sure to use genuine Baroness parts or parts designated by Kyoeisha.
Note that the Baroness product warranty may not apply to defects caused by the use of parts from other companies.

Warning Symbols

This manual uses the following warning symbols for handling precautions that are important for your safety.

696cq5-001	Warning symbol

This symbol indicates the articles regarding "Danger," "Warning," or "Caution."
Those articles describe important safety precautions and so read them carefully to understand completely before operating the machine.
Failure to adequately follow these safety precautions may cause an accident.

Danger

This symbol indicates that serious injury or death will occur if the warning is ignored.

Warning

This symbol indicates that serious injury or death may occur if the warning is ignored.

Caution

This symbol indicates that injury or damage to property may occur if the warning is ignored.

Important

This symbol indicates precautions on the mechanism of the machine.

https://truckmanualshub.com/

Introduction

Purpose

This machine is intended for cutting turf grass at golf courses.
Do not use this machine in any way other than its intended purpose, and do not modify the machine.
Operating this machine for other purposes and modifying it may be very dangerous and may cause damage to the machine.
In addition, this machine is not authorized for operation as a special motor vehicle. Do not operate it on public roads.

https://truckmanualshub.com/

Contents

Safety ..... Page 1-1

Safe Operating Practices ..... Page 1-2

Disposal ..... Page 2-1

Waste Disposal ..... Page 2-2

Product Overview ..... Page 3-1

Specifications ..... Page 3-2
Sound pressure level ..... Page 3-3
Sound power level ..... Page 3-3
Vibration level ..... Page 3-3
Names of Each Section ..... Page 3-4
Safety Signs and Instruction Signs ..... Page 3-6

Handling Instructions ..... Page 4-1

Pre-installation Adjustments ..... Page 4-2
Inspection Before Use ..... Page 4-2
Tightening torques ..... Page 4-14
Adjustment Before Operating ..... Page 4-17
Procedure to Start / Stop Engine ..... Page 4-18
Operation of Each Section ..... Page 4-20
Instruments ..... Page 4-28
Travel of Machine ..... Page 4-31
Cutting Work ..... Page 4-31
Transporting ..... Page 4-32

Maintenance ..... Page 5-1

Maintenance Precautions ..... Page 5-2
Maintenance Schedule ..... Page 5-3
Jacking up the machine ..... Page 5-6
Greasing ..... Page 5-8
Maintenance (Main Body) ..... Page 5-11
Long-Term Storage ..... Page 5-17

https://truckmanualshub.com/

Contents

https://truckmanualshub.com/

Safe Operating Practices ..... Page 1-2

Training .....Page 1-2
Preparation .....Page 1-2
Operation .....Page 1-3
Maintenance and storage .....Page 1-4

https://truckmanualshub.com/

Failure to adequately follow these safety precautions may cause an accident resulting in injury or death.

Danger

This machine is designed to ensure safe operation and has been tested and inspected thoroughly before shipment from the factory.
The machine is equipped with safety devices to prevent accidents.
However, whether the machine demonstrates its original performance level depends on the manner in which it is operated and handled, as well as the manner in which it is managed on a daily basis.
Inappropriate use or management of the machine may result in injury or death.
Observe the following safety instructions to ensure safe operation.

Safe Operating Practices

The following instructions include the ones from CEN standard EN 836: 1997, ISO standard 5395: 1990, and ANSI B71.4-2004.

Training

1. Read this manual and other training material carefully. Be familiar with the controls, safety signs, and the proper use of the equipment.
2. If the operator or mechanic can not read English it is the owner's responsibility to explain this manual to them.
3. All operators and mechanics should seek and obtain professional and practical instruction.
   The owner is responsible for training the users.
   Such instruction should emphasize.
   [1] The need for care and concentration when working with ride-on machines.
   [2] Control of a ride-on machine sliding on a slope will not be regained by the application of the brake.
   The main reasons for loss of control are
   - Insufficient wheel grip
   - Being driven too fast
   - Inadequate braking
   - The type of machine is unsuitable for its task
   - Lack of awareness of the effect of ground conditions, especially slopes
   - Incorrect hitching and load distribution
4. Never allow children or people unfamiliar with these instructions to use or service the machine.
   Local regulations may restrict the age of the operator.
5. The owner/use can prevent and is responsible for accidents or injuries occurring to themselves, other people, or property.
6. Keep in mind that the owner, operator, and mechanic are responsible for accidents or hazards occurring to other people or their property.

Preparation

1. Evaluate the terrain to determine what accessories and attachments are needed to properly and safety perform the job.
   Only use accessories and attachments approved by the manufacturer.
2. While operating, always wear substantial footwear, long trousers, hard hat, safety glasses, and ear protection.
   Long hair, loose clothing, or jewelry may get tangled in moving parts.
   Do not operate the equipment when barefoot or wearing open sandals.
3. Inspect the area where the equipment is to be used and remove all objects such as rocks, toys and wire which can be thrown by the machine.
4. Exercise care in the handling of fuel.

Warning

Warning-Fuel is highly flammable.
Take the following precautions.

[1] Store fuel in containers specifically designed for this purpose.
[2] Add fuel before starting the engine.
Never remove the cap of the fuel tank or add fuel while the engine is running or when the engine is hot.
[3] Refuel outdoors only and do not smoke while refueling.
[4] If fuel is spilled, do not attempt to start the engine but move the machine away from the area of spillage and avoid creating any source of ignition until petrol vapours have dissipated.

https://truckmanualshub.com/

[5] Replace all fuel tanks and container caps securely.

5. Check that operator's presence controls, safety switches and shields are attached and functioning properly.
   Do not operate unless they are functioning properly.
6. If the brake operation is faulty or the parking brake lever has noticeable play, be sure to adjust or repair them before operating the machine.
7. Replace faulty mufflers.
8. Before using, always visually inspect to see that the blades, blade bolts, and cutting assembly are not worn or damaged.
   Replace worn or damaged blades and bolts in sets to preserve balance.
9. On multi-blanded machines, take care as rotating one blade can cause other blades to rotate.

Operation

1. Do not operate the engine in a confined space where dangerous carbon monoxide fumes can collect.
2. Only operate in good light, keeping away from holes and hidden hazards.
3. Before attempting to start the engine, disengage all attachments, shift into neutral, and engage the parking brake.
   Only start engine from the operator's position.
   Use seat belts if provided.
4. Remember there is no such thing as a safe slope.
   Travel on grass slopes requires particular care.
   To guard against overturning:
   [1] Do not stop or start suddenly when going up or downhill.
   [2] Engage clutch slowly, always keep machine in gear, especially when traveling downhill.
   [3] Machine speeds should be kept low on slopes and during tight turns.
   [4] Stay alert for humps and hollows and other hidden hazards.
   [5] Never operate across the face of the slope, unless the machine is designed for this purpose.
   [6] Never drive the machine on a slope with an angle of gradient that is greater than that specified or in a place where there is a danger of the machine slipping.
5. Never raise deck with the blades running.
6. Never operate with the discharge deflector raised, removed or altered, unless using a grass catcher.
   Do not crawl under the machine while it is in operation.
7. Never operate with the discharge deflector raised, removed or altered, unless using a grass catcher.
8. Do not change the engine governor settings or overspeed the engine.
   Operating the engine at excessive speed may increase the hazard of personal injury.
9. Do the following before leaving the operator's position.
   [1] Stop on level ground.
   [2] Disengage the power take-off and lower the attachments.
   [3] Change into neutral and set the parking brake.
   [4] Stop the engine and remove the key.
10. Disengage the drive to attachments, stop the engine, and remove the ignition key in the following conditions.
    [1] Before refueling.
    [2] Before removing the grass catcher/ catchers;
    [3] Before making height adjustment unless adjustment can be made from the operator's position:
    [4] Before cleaning blockages.
    [5] Before checking, cleaning or working the machine.
    [6] After striking a foreign object or if an abnormal vibration occurs.
    Inspect the machine for damage and make repairs before restarting and operating the equipment.
11. Keep hands and feet away from the cutting units and the rotating parts.
12. Look behind and down before backing up to be sure of a clear path.
13. Do not carry passengers.
14. Never operate while people, especially children, or pets are nearby.

https://truckmanualshub.com/

15. Slow down and use caution when making turns and crossing roads and sidewalks.
16. Stop the blades rotating before crossing surfaces other than grass.
17. Disengage drive to attachments when transporting or not in use.
18. When using any attachments, never direct discharge of material toward bystanders nor allow anyone near the machine while in operation.
19. Do not operate the machine under the influence of alcohol or drugs.
20. Take care when loading or unloading the machine into a trailer or a truck.
    Load or unload the machine in a flat and safe place.
    Before loading or unloading, set the parking brake on the truck or trailer, stop the engine, and chock the wheels.
    When transporting the machine on a truck or a trailer, set the parking brake, stop the engine, and fasten the machine to the truck with a rope or other suitable restraining device that has sufficient strength.
    When using a running board, select one with sufficient strength, length, and width and that will not cause the machine to slip.
21. Close the fuel valve before transporting the machine.
22. Use care when approaching blind corners, shrubs, trees, or other objects that may obscure vision.
23. Do not take your eyes off the road ahead.
    Do not operate the machine with no hands.
24. Reduce the throttle setting during engine run-out and, if the engine is provided with a shut-off valve, turn the fuel off at the conclusion of operation.

Maintenance and storage

1. Disengage drives on level ground, lower the atattachments, set parking brake, stop engine and remove key from ignition.
   Wait for all movement to stop before adjusting, cleaning or repairing.
2. When machine is to be parked, stored, or left unattended, lower the cutting units unless a positive mechanical lock is provided.
3. To reduce the fire hazard, keep the engine, silencer/muffler, battery compartment fuel storage area, cutting units and drives free of grass, leaves, or excessive grease.
   Clean up oil or fuel spillage.
4. Allow the engine to cool before storing in any enclosure.
5. Only cover the machine with a sheet after hot parts have sufficiently cooled down.
6. Never store the equipment with fuel in the tank inside a building where fumes may reach an open flame or spark.
7. If the engine is provided with a shut-off valve, shut off valve while storing or transporting.
8. Do not store fuel near flames.
9. Never allow untrained personnel to service machine.
10. Allow the engine/muffler to cool before checking/maintenance.
11. Appropriately manage and correctly use the tools necessary for servicing or adjusting the machine.
12. Use jack stands to support components when required.
13. Carefully release pressure from components with stored energy.
14. Be sure to depressurize the hydraulic system before performing maintenance operations on it such as removing hydraulic equipment.
15. Check whether line connectors in the hydraulic system are properly tightened.
    Before applying hydraulic pressure, check the connections of the hydraulic pressure lines and the condition of the hoses.
16. When checking the hydraulic circuit for pinhole leaks or oil leakage from nozzles, do not use your hands.
    Use items such as paper or corrugated cardboard to find leakage points.
    Be extremely careful with high-pressure oil as it may pierce your skin, result.
    If fluid is injected into the skin it must be surgically removed within a few hours by a doctor familiar with this form of injury or gangrene may result.
17. Disconnect battery before making any repairs.
    Disconnect the negative terminal first and the positive last.
    Reconnect positive first and negative last.

https://truckmanualshub.com/

18. Make sure that parts such as wires are not touching each other and that their covers have not come off.
19. Use care when checking the blades.
    [1] Wrap the blades or wear gloves, and use caution when servicing them.
    [2] Only replace blades.
    [3] Never straighten or weld them.
20. Keep hands and feet away from moving parts.
    If possible, do not make adjustments with the engine running.
21. Charge batteries in an open well ventilated area, away from spark and flames.
    Unplug charger before connecting or disconnecting from battery.
    Wear protective clothing and use insulated tools.
22. Keep all parts in good working condition and all hardware tightened.
    Replace all worn or damaged decals.
23. Keep all nuts, bolts and screws tight to be sure the equipment is in safe working condition.
24. Check the grass catcher frequently for wear or deterioration.
25. If the fuel tank has to be drained, do this outdoors.

https://truckmanualshub.com/

https://truckmanualshub.com/

Disposal

Waste Disposal ..... Page 2-2

About the Waste disposal .....Page 2-2

https://truckmanualshub.com/

Disposal

Waste Disposal

About the Waste disposal

Make sure that waste generated when servicing or repairing the machine is disposed of in accordance with local regulations.
(e.g. waste oil, antifreeze batteries, rubber products, and wires etc.)

https://truckmanualshub.com/

Specifications ..... Page 3-2

Specifications .....Page 3-2

Sound pressure level ..... Page 3-3

Sound pressure level .....Page 3-3

Sound power level ..... Page 3-3

Sound power level ..... Page 3-3

Vibration level ..... Page 3-3

Hand-arm vibration ..... Page 3-3
Whole body vibration ..... Page 3-3

Names of Each Section ..... Page 3-4

Serial Number Plate .....Page 3-5
Specification Decal ..... Page 3-5
Noise Emission Decal .....Page 3-5
Year of Manufacture Decal .....Page 3-5
ROPS authentication decal ..... Page 3-5
Battery capacity decal ..... Page 3-5

Safety Signs and Instruction Signs ..... Page 3-6

About Safety Signs and Instruction Signs .....Page 3-6
Positions of Safety Decals and Instruction Decals ..... Page 3-6
Warning and Instruction Decals .....Page 3-7

https://truckmanualshub.com/

Specifications

Specifications

Model			GM1700
Dimensions	Total length		255 cm
	Total width		159 cm
	Total height	Roof	197 cm
		Handle	121 cm
Weight			724 kg (with ROPS and empty fuel tank)
Minimum turning radius			298 cm
Engine		Model	Kubota D1105
		Type	Vertical water-cooled 4-cycle diesel engine
		Total displacement	1,123 cm^3 (1.123 L)
		Maximum output	17.8 kW (24.2 PS)/2,800 rpm
Fuel tank capacity			Diesel 23.0 dm^3 (23.0 L)
Fuel consumption			280 g/kW.h (rated output)
Quantity of engine oil			3.0 dm^3 (3.0 L)
Operating width			See the attachment's Operating Manual.
Mowing height			See the attachment's Operating Manual.
Drive			Four-wheel drive
Speed (HST)		Forward	2WD: 0 - 16.0 km/h / 4WD: 0 - 8.0 km/h
		Reverse	2WD: 0 - 14.0 km/h / 4WD: 0 - 7.0 km/h
Speed (Mechanical)			-
Efficiency			See the attachment's Operating Manual.
Maximum inclination for operation			25 degrees
Tire size		Front wheel	21 x 11.00 - 10
		Rear wheel	21 x 11.00 - 10
Tire pneumatic pressure		Front wheel	140 kPa (1.4 kgf/cm^2)
		Rear wheel	140 kPa (1.4 kgf/cm^2)
Battery			80D26R

* The factory default maximum engine rpm is 2,800 rpm.

https://truckmanualshub.com/

Sound pressure level

Sound pressure level

This machine was confirmed to have a continuous A-weighted sound pressure level of 93dB by measuring identical machines in accordance with the procedure specified in ISO 5395-1:2013.

Sound power level

Sound power level

This machine was confirmed to have a sound power level of 105dB by measuring identical machines in accordance with the procedure specified in directive 2000/14/EC.

Vibration level

Hand-arm vibration

This machine was confirmed to transmit a maximum vibration level of less than 2.5 m/s^2 to hands and arms by measuring identical machines in accordance with the procedure specified in ISO 5349-1:2001,ISO 5349-2:2001.

Whole body vibration

This machine was confirmed to transmit a maximum vibration level of 1.52 m/s^2 to the whole body by measuring identical machines in accordance with the procedure specified in ISO 2631-1:1997,ISO 2631-2:2003.

https://truckmanualshub.com/

Product Overview

Names of Each Section

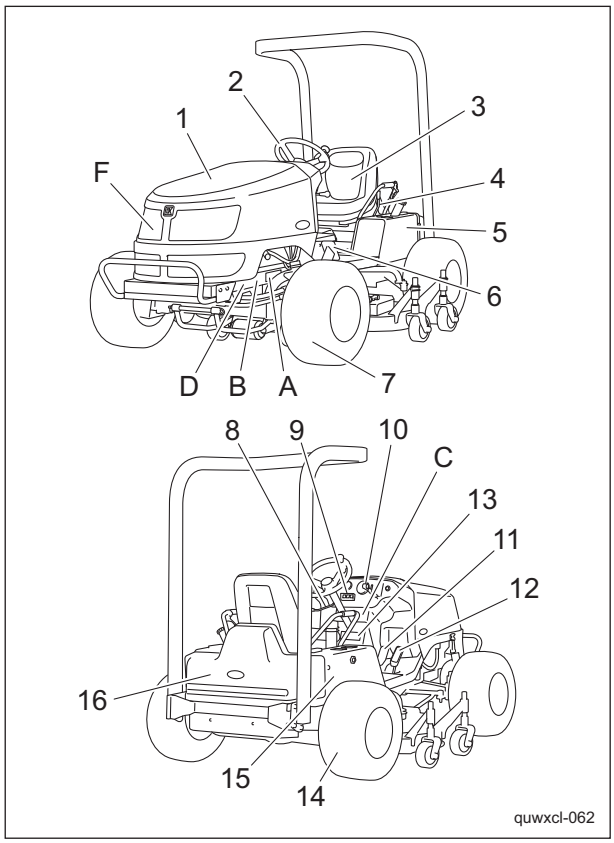

Names of Each Section_001

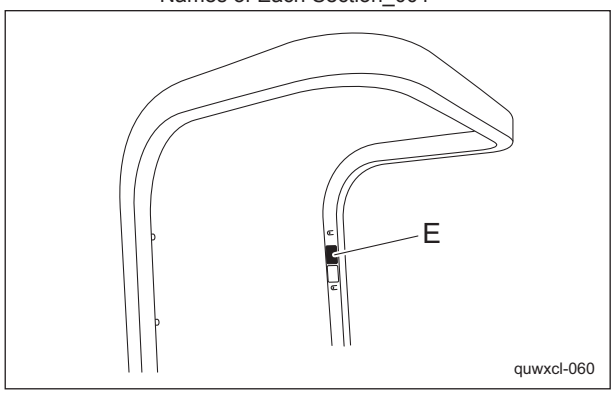

Names of Each Section_002

1	Hood
2	Steering wheel
3	Seat
4	2WD/4WD selector lever
5	Fuel tank
6	Brake pedal
7	Front wheel
8	Knife rotation lever
9	Meter panel
10	Throttle lever
11	Forward pedal
12	Reverse pedal
13	Center cover
14	Rear wheel
15	Hydraulic tank
16	Rear cover
A	Serial number plate
B	Specification decal
C	Decal, noise emission
D	Year of manufacture decal
E	ROPS authentication decal
F	Battery specifications decal

https://truckmanualshub.com/

Serial Number Plate

The serial number plate indicates the model and serial number of the machine.

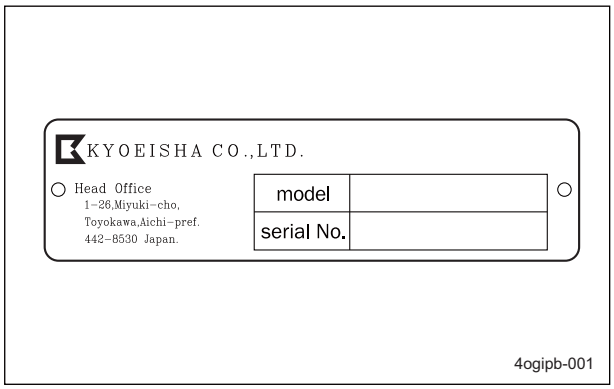

Serial Number Plate_001

Year of Manufacture Decal

The year of manufacture decal indicates the year when this machine was manufactured.

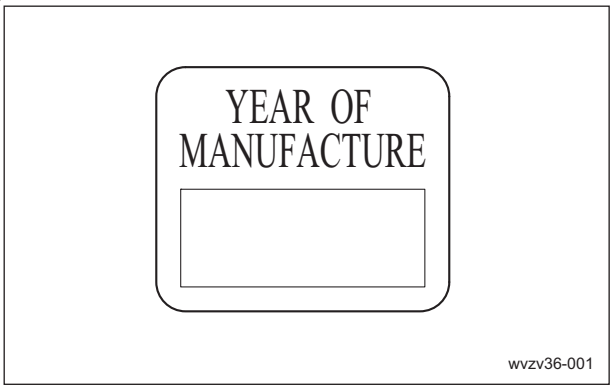

Year of Manufacture Decal_001

Specification Decal

The Specification decal indicates the CE logo, model name, and weight, etc.

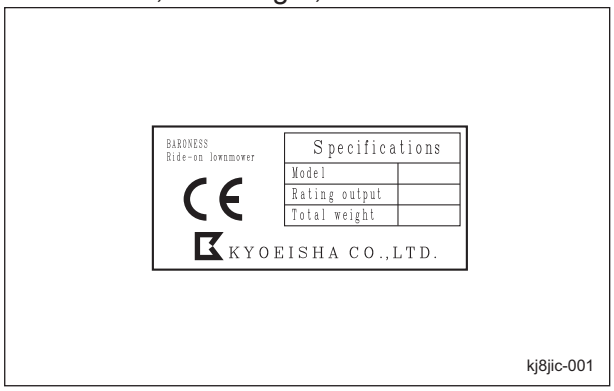

Decal, Specifications_001

ROPS authentication decal

The ROPS authentication decal indicates the manufacturer, model, etc., in accordance with International Standard ISO 21299:2009.

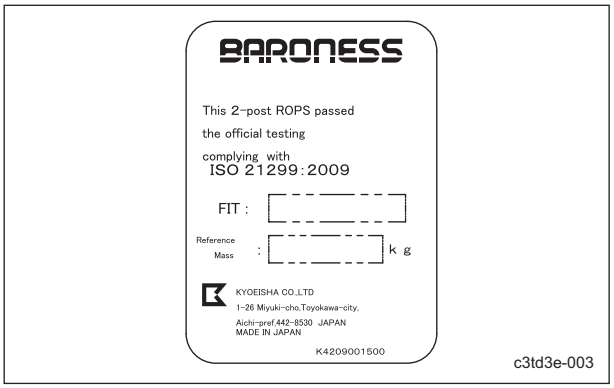

ROPS Authentication Decal_001

Noise Emission Decal

The noise emission decal indicates the sound power level determined by measuring identical machines in accordance with the procedure specified in the EC directives.

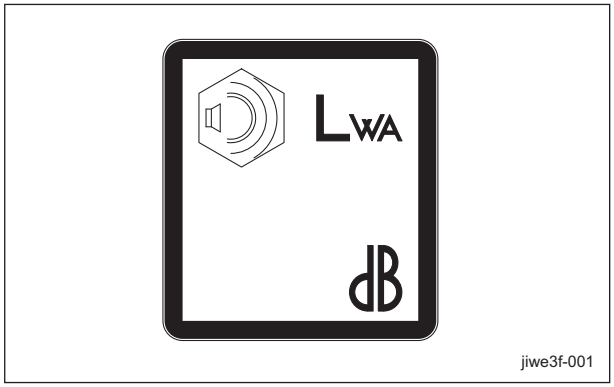

Noise Emission Decal_001

Battery capacity decal

The battery capacity decal indicates the capacity by 20HR and CCA.

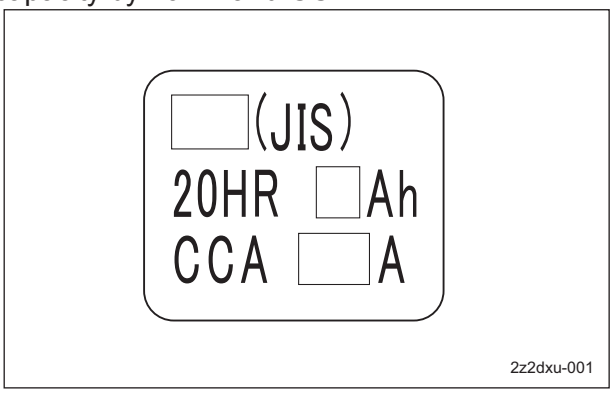

Battery capacity decal_001

https://truckmanualshub.com/

Safety Signs and Instruction Signs

About Safety Signs and Instruction Signs

Warning

Safety decals and instruction decals are attached to this machine.
Make sure that they are preserved in their entirety. If they are damaged, become dirty, or peel off, replace them with new ones.

Part numbers for decals that need to be replaced are listed in the parts catalog. Order them from a Baroness dealer or Kyoeisha.

Positions of Safety Decals and Instruction Decals

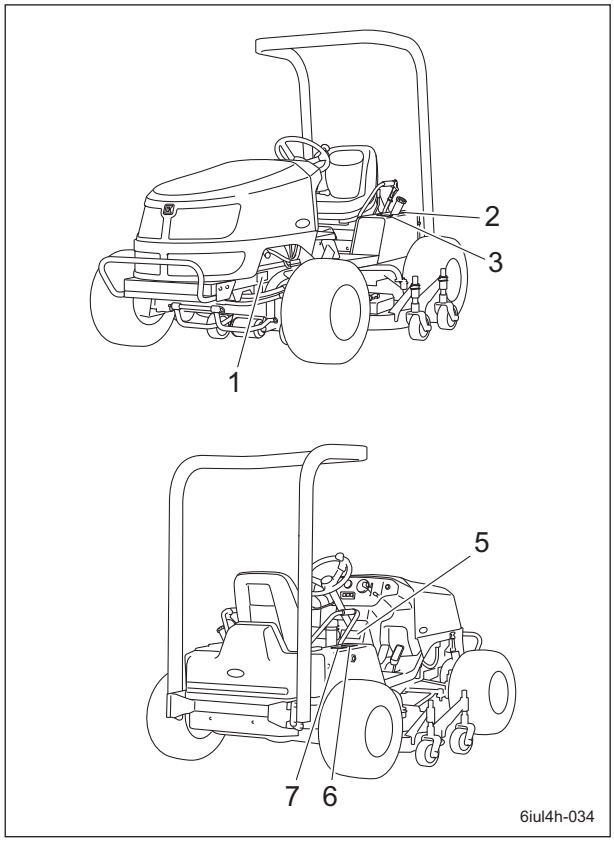

Positions of Safety Decals and Instruction Decals_001

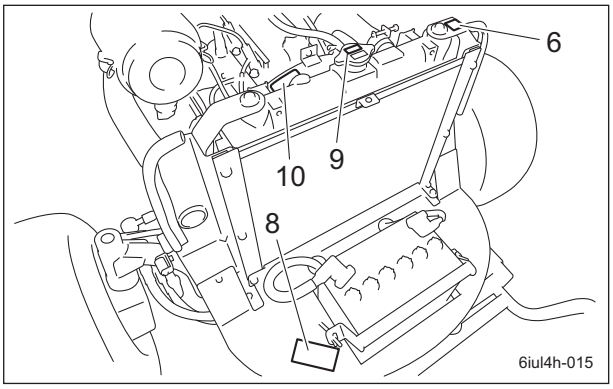

Positions of Safety Decals and Instruction Decals_002

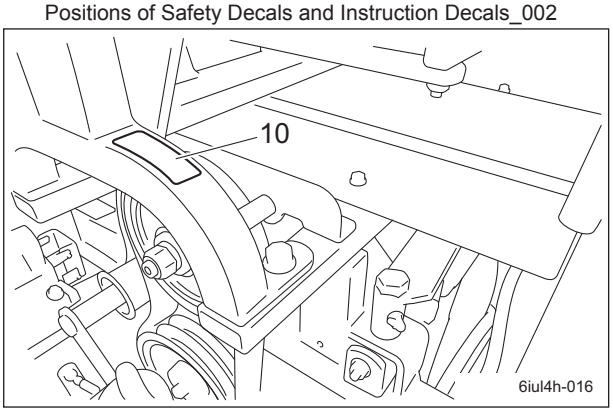

Positions of Safety Decals and Instruction Decals_003

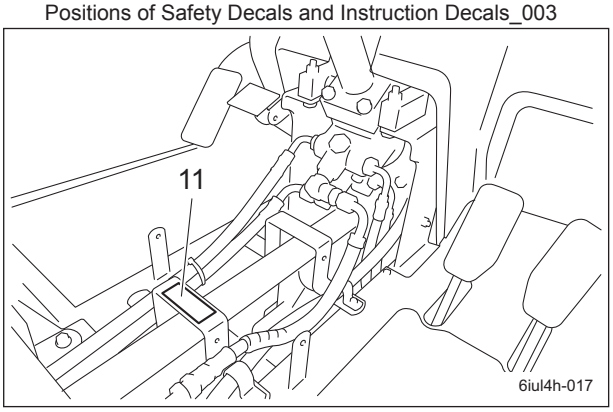

Positions of Safety Decals and Instruction Decals_004

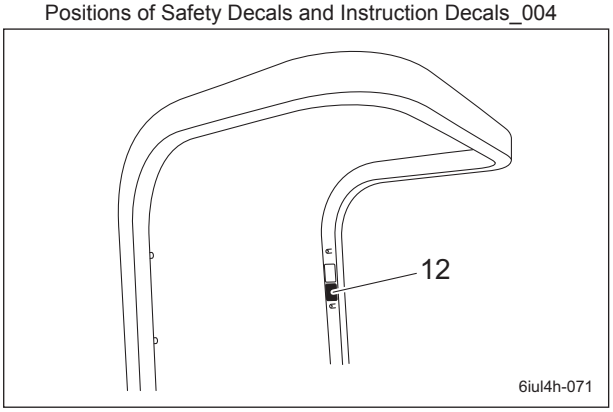

Positions of Safety Decals and Instruction Decals_005

https://truckmanualshub.com/

Warning and Instruction Decals

1	qigqnx-022	K4205001540 Decal, caution to hot parts **Caution** High temperature - Do not touch. Otherwise, you will be burned.
2	qigqnx-021	K4209001000 Decal, diesel fuel refueling hole Use diesel fuel.
3	qigqnx-041	K4205001940 Decal, caution fire **Danger** Keep away from fire.
4	Blank	Blank
5	qigqnx-056	K4205002010 Decal, caution handling 1. **Warning** Read the Owner's Operating Manual. 2. **Warning** Apply the parking brake, stop the engine, remove the ignition key, and then leave the machine. 3. **Warning** Caution for exhaust gas 4. **Danger** Flying objects - All persons other than the operator must keep a safe distance from the machine. 5. **Warning** Caution for noise emission

https://truckmanualshub.com/

6	qigqnx-042	K4205001920 Decal, caution to hot parts Caution High temperature - Do not touch. Otherwise, you will be burned.
7	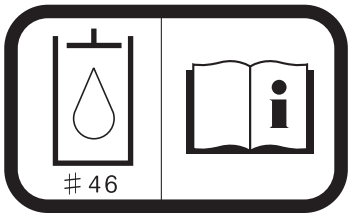 qigqnx-020	K4209000980 Decal, hydraulic oil Read the Owner's Operating Manual.
8	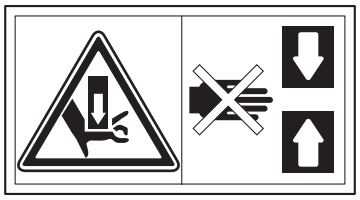 qigqnx-035	K4205001580 Decal, caution to injure Caution May pinch - There is a risk of being pinched.
9	qigqnx-045	K4205001970 Decal, caution for spouting coolant Caution Caution for coolant ejecting - Do not open while hot.
10	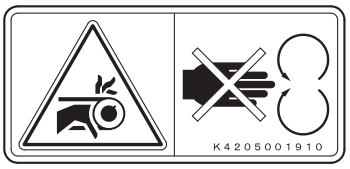 qigqnx-028	K4205001910 Decal, caution not to get caught in Danger Watch for rotating parts - Keep your hands away from the belts while the engine is running.
11	qigqnx-057	K4205002000 Decal, caution PTO Danger Watch for rotating parts - Keep your hands away from the joints while the engine is running.
12	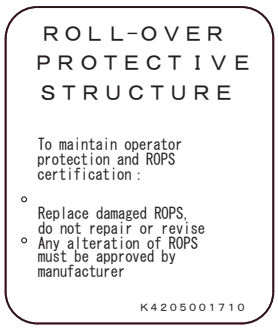 qigqnx-072	K4205001710 Decal, caution to ROPS Replace damaged ROPS. Do not repair or modify. (Only when equipped with ROPS)

https://truckmanualshub.com/

Pre-installation Adjustments ..... Page 4-2

Operating Attachments ..... Page 4-2
Installation of Universal Joint ..... Page 4-2

Inspection Before Use ..... Page 4-2

Hood ..... Page 4-2
Radiator ..... Page 4-3
Coolant ..... Page 4-4
Hydraulic Oil ..... Page 4-6
Air Cleaner ..... Page 4-8
Battery ..... Page 4-9
Tire ..... Page 4-10
Brake ..... Page 4-10
Belt ..... Page 4-10
Around the Engine ..... Page 4-10
Engine Oil ..... Page 4-11
Fuel ..... Page 4-13
Oil Leakage ..... Page 4-13

Tightening torques ..... Page 4-14

Standard tightening torques ..... Page 4-14
Principal tightening torques ..... Page 4-16

Adjustment Before Operating ..... Page 4-17

Adjustment of Steering Wheel ..... Page 4-17
Adjustment of Seat ..... Page 4-17

Procedure to Start / Stop Engine ..... Page 4-18

Start / Stop of Engine ..... Page 4-18
Safety Mechanisms ..... Page 4-19
Warning Mechanisms ..... Page 4-19

Operation of Each Section ..... Page 4-20

Precautions for Operating the Machine ..... Page 4-20
Cautions for when You Leave the Machine ..... Page 4-20
Instruction Decals ..... Page 4-20
Throttle Lever ..... Page 4-23
Mower Unit Up/Down Switch ..... Page 4-23
Knife Rotation Lever ..... Page 4-24
2WD/4WD Selector Lever ..... Page 4-24
Traveling Pedal ..... Page 4-25
Brake Pedal ..... Page 4-25
Parking Brake Lever ..... Page 4-25
Hood ..... Page 4-26
Rear Cover ..... Page 4-26
Center Cover ..... Page 4-27
Seatback Cover ..... Page 4-27
Underseat Cover ..... Page 4-28

Instruments ..... Page 4-28

Instruments on the Operation Panel .... Page 4-28
Tachometer/Hour Meter ..... Page 4-28
Water Temperature Gauge ..... Page 4-29
Pilot Lamps ..... Page 4-30
Angle Meter ..... Page 4-30

Travel of Machine ..... Page 4-31

Traveling Procedure ..... Page 4-31
Towing the Machine ..... Page 4-31

Cutting Work ..... Page 4-31

Cutting Operation ..... Page 4-31

Transporting ..... Page 4-32

Transporting Procedure ..... Page 4-32

https://truckmanualshub.com/

Handling Instructions

Pre-installation Adjustments

Operating Attachments

For details on handling the attachment, please refer to the separate attachment's Operating Manual.

Installation of Universal Joint

> **Important**
>
> Check the alignment point of the splines before installing (inserting) the universal joint.

1. Check the alignment point of the splines for connecting the universal joint.

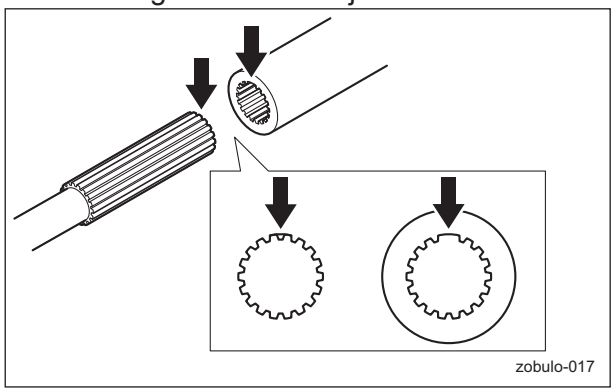

Installation of Universal Joint_001

2. Align the holes of the universal joint and gearbox, and then install it with the pin, washer and cotter pin.

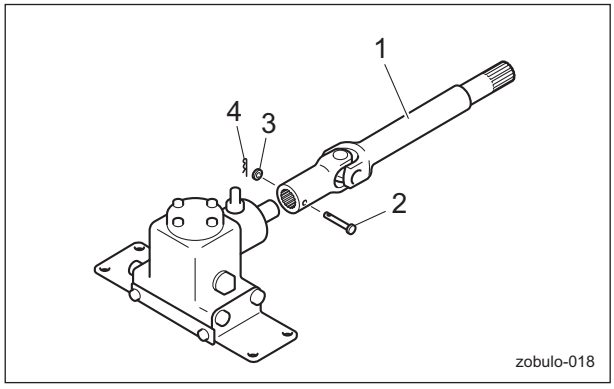

Installation of Universal Joint_002

1	Universal joint
2	Pin
3	Washer
4	Cotter pin

Note:
For removing the universal joint, reverse the installation procedure.

Inspection Before Use

Be sure to perform an inspection before you start using the machine so that you will be able to take advantage of its optimum performance for a long period of time.

Hood

Inspection of Hood (Intake)

1. Make sure that there is no damage to the hood.
2. Make sure that the intake is not dirty.

Cleaning of Hood (Intake)

> **Important**
>
> An unclean hood intake may cause overheating or damage to the engine.
> It may also cause malfunction of the hydraulic system.

> **Important**
>
> While cleaning, do not allow water to get on the engine.
> This may cause damage to the engine.

If the intake has been contaminated with dust, be sure to clean it.
After operating the machine in a dusty environment, it is important to remove dust as soon as possible.

1. Open the hood.
2. Carefully clean the inside and outside of the intake with water or compressed air.

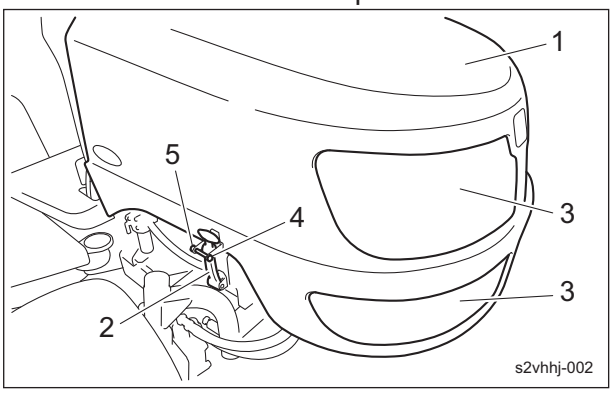

Cleaning of Hood (Intake)_001

https://truckmanualshub.com/

1	Hood
2	Rubber catch
3	Intake
4	Bolt
5	Nut

Radiator

Inspection of Radiator

For details on handling the engine, please refer to the separate Engine Operating Manual.

1. Make sure that there is no damage to the radiator.
2. Make sure that the radiator is not contaminated.

Cleaning of Radiator

For details on handling the engine, please refer to the separate Engine Handling Manual.

> **Important**
>
> An unclean radiator may cause overheating or damage to the engine.
> It may also cause malfunction of the hydraulic system.

> **Important**
>
> While cleaning, do not allow water or dust to enter the air intake.
> This may cause damage to the engine.

> **Important**
>
> Do not use solid objects, such as a spatula or screwdriver, or high-pressure water to clean the radiator or oil cooler.
> Otherwise, special fins or tubes may be damaged, possibly resulting in reduced cooling performance or coolant leakage.

If the radiator has been contaminated with dust, be sure to clean it.
After operating the machine in a dusty environment, it is important to remove dust as soon as possible.

1. Open the hood.
2. Pull the dust screen up to remove it.

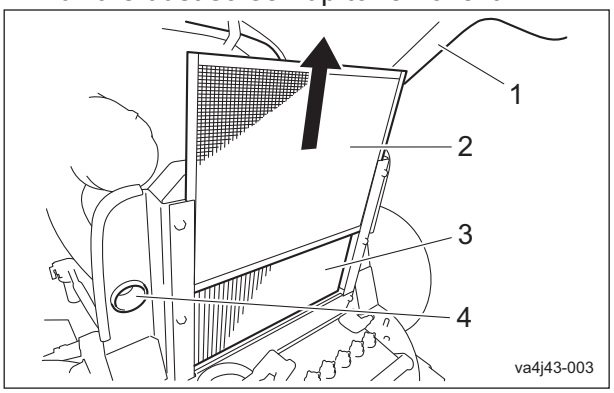

Cleaning of Radiator_001

1	Hood
2	Dust screen
3	Radiator
4	Air intake

3. Carefully clean the front and back of the dust screen and radiator with water or compressed air.

https://truckmanualshub.com/

Coolant

Inspection of Coolant

For details on handling the engine, please refer to the separate Engine Handling Manual.

Warning

Do not touch the radiator or coolant during engine operation or right after the engine has been turned off.
Due to high temperatures, doing so could cause burns.
After the radiator has well cooled down, open the radiator cap.

Caution

Supply coolant after the engine has well cooled down.

Caution

The radiator cap is pressurized.
If you remove the radiator cap while the engine is overheated, hot steam will burst out, possibly resulting in burns.
Make sure that the water temperature and pressure are reduced, and then grab the cap with a thick cloth and gradually open the cap.

Important

When you supply coolant, be sure to use clean water, such as tap water.
During winter, remove coolant. Alternatively, mix long-life coolant and clean water, and then pour it into the radiator and reserve tank.

Relationship between concentration of long-life coolant (LLC) and freezing temperature

Freezing temperature	LLC concentration (volume %)
Down to -10°C (14°F)	20%
Down to -15°C (5°F)	30%
Down to -20°C (-4°F)	35%
Down to -25°C (-13°F)	40%

1. Make sure that the coolant level in the reserve tank is between "Full" and "Low."

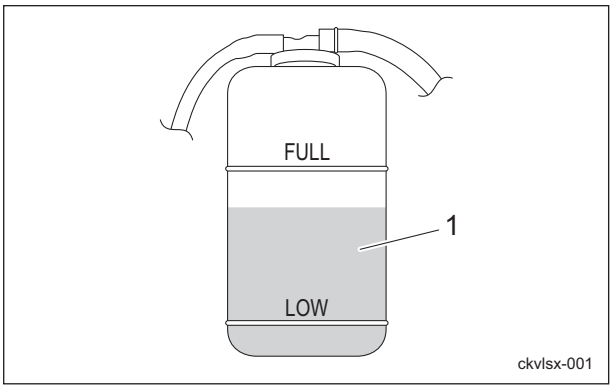

Inspection of Coolant_001

1	Reserve tank

https://truckmanualshub.com/

Coolant Supply

For details on handling the engine, please refer to the separate Engine Handling Manual.

Warning

Do not touch the radiator or coolant during engine operation or right after the engine has been turned off.
Due to high temperatures, doing so could cause burns.
After the radiator has well cooled down, open the radiator cap.

Caution

Supply coolant after the engine has well cooled down.

Caution

The radiator cap is pressurized.
If you remove the radiator cap while the engine is overheated, hot steam will burst out, possibly resulting in burns.
Make sure that the water temperature and pressure are reduced, and then grab the cap with a thick cloth and gradually open the cap.

Important

When you supply coolant, be sure to use clean water, such as tap water.
During winter, remove coolant. Alternatively, mix long-life coolant and clean water, and then pour it into the radiator and reserve tank.

Relationship between concentration of long-life coolant (LLC) and freezing temperature

Freezing temperature	LLC concentration (volume %)
Down to -10°C (14°F)	20%
Down to -15°C (5°F)	30%
Down to -20°C (-4°F)	35%
Down to -25°C (-13°F)	40%

1. If the coolant level in the reserve tank is lower than the "LOW" mark, open the reserve tank cap and fill the tank with clean water up to the "FULL" mark.

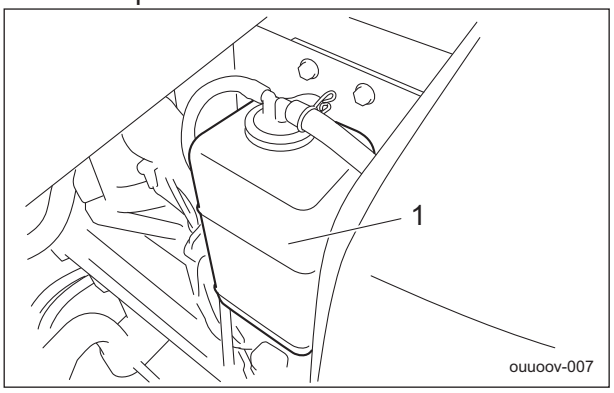

Coolant Supply_001

1	Reserve tank

2. If no coolant is in the reserve tank, follow the steps below to fill the tank with clean water.
   [1] Open the radiator cap, and then supply clean water up to the opening.
   [2] Open the reserve tank cap, and then supply clean water up to the "FULL" mark.

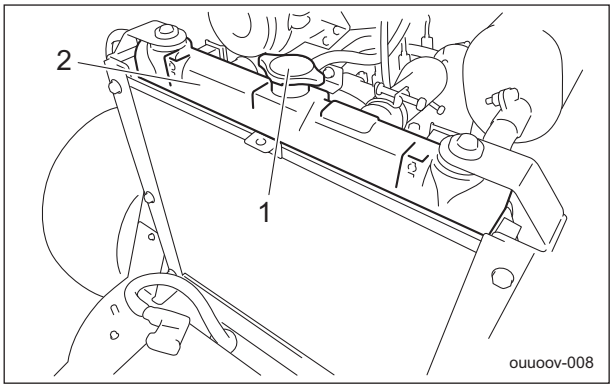

Coolant Supply_002

1	Radiator cap
2	Radiator

https://truckmanualshub.com/

Change of Coolant

For details on handling the engine, please refer to the separate Engine Handling Manual.

Warning

When you change the coolant, be sure to drain it into a bowl and discard it in accordance with local laws and regulations.

Warning

Do not touch the radiator or coolant during engine operation or right after the engine has been turned off.
Due to high temperatures, doing so could cause burns.
After the radiator has well cooled down, open the radiator cap.

Caution

Change coolant after the engine has well cooled down.

Important

When you change coolant, be sure to use clean water, such as tap water.
During winter, remove coolant. Alternatively, mix long-life coolant and clean water, and then pour it into the radiator and reserve tank.

For details on changing coolant, please refer to the separate Engine Operating Manual.
Coolant quantity, including the reserve tank, is approximately 6.0 dm^3 (6.0 L).

Hydraulic Oil

Inspection of Hydraulic Oil

The oil gauge is on the side of the hydraulic tank.

1. Raise the mower units and maintain that position on a level surface.
2. Make sure that the oil level is at the middle of the oil gauge.

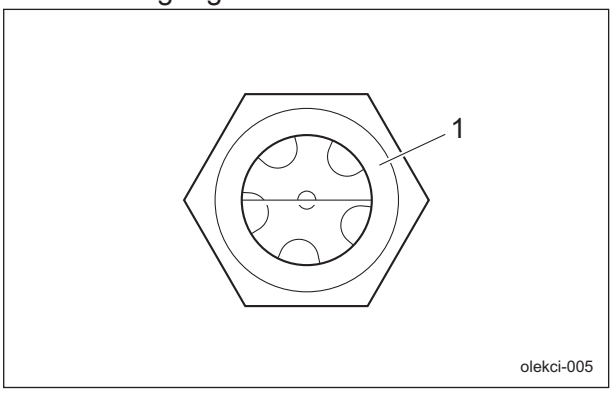

Inspection of Hydraulic Oil_001

1	Oil gauge

3. Check underneath the machine for oil leakage.

Hydraulic Oil Supply

Important

Do not mix different types of oil.

Important

Use Shell Tellus S2M46 (or equivalent) as hydraulic oil.

1. If the oil level is low, open the tank cap and supply oil.

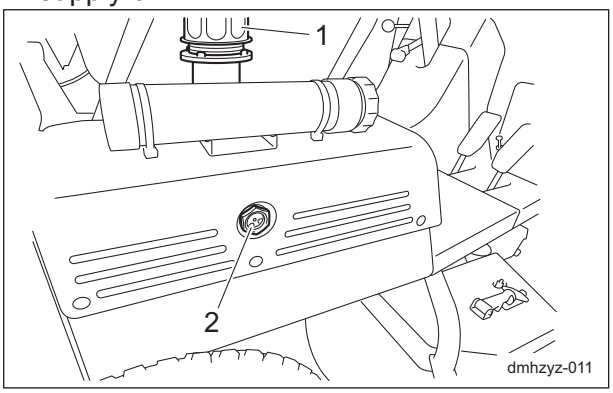

Hydraulic Oil Supply_001

https://truckmanualshub.com/

1	Tank cap
2	Oil gauge

2. Securely close the tank cap.
3. Start the engine, raise and lower the mower units, and turn the steering wheel left and right.
   Move forward and reverse repeatedly several times.
4. Raise the mower units and maintain that position on a level surface, and then check to see if the oil level is at the middle of the oil gauge. If necessary, supply oil.
5. Check underneath the machine for oil leakage.

Change of Hydraulic Oil

Warning

When you change the hydraulic oil, be sure to drain it into a bowl and discard it in accordance with local laws and regulations.

Caution

If the oil emulsifies or if it becomes even slightly less transparent, change the oil immediately.

Caution

Be careful with hot oil, which could cause burns if it contacts your skin.

Important

Use Shell Tellus S2M46 (or equivalent) as hydraulic oil.

1. Follow the steps below to remove the old oil.
   [1] Start and run the engine to warm up the oil.
   [2] On a level surface, lower the mower units, and then stop the engine.
   [3] Remove the drain plug of the hydraulic tank, and then drain the old oil into a container.
   [4] Wind new sealing tape on the drain plug, and then attach it to the hydraulic tank.

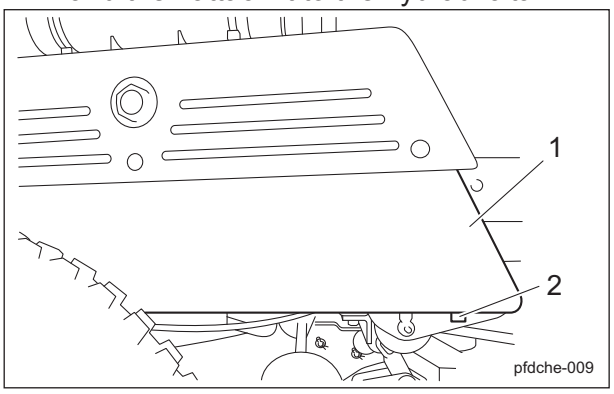

Change of Hydraulic Oil_001

1	Hydraulic tank
2	Drain plug

2. Open the tank cap, and then pour new oil from the fill port until the oil level reaches the middle of the oil gauge on the hydraulic tank.
   The hydraulic tank capacity is approximately 22.0 dm^3 (22.0 L).

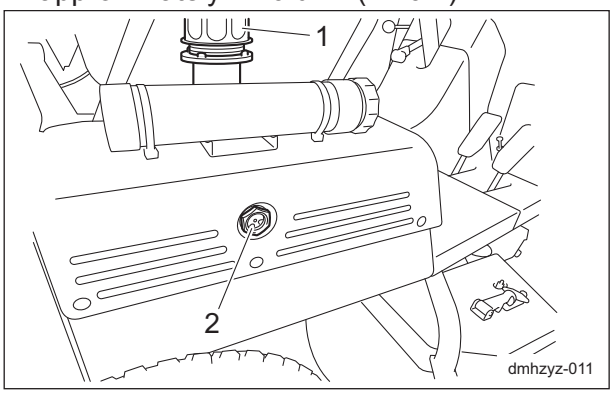

Change of Hydraulic Oil_002

1	Tank cap
2	Oil gauge

3. Tighten the tank cap securely.
4. Start the engine, raise and lower the mower units, and turn the steering wheel left and right.
   Move forward and reverse repeatedly several times.
5. Raise the mower units and maintain that position on a level surface, and then check to see if the oil level is at the middle of the oil gauge. If necessary, supply oil.
6. Check underneath the machine for oil leakage.

https://truckmanualshub.com/

Air Cleaner

Inspection of Air Cleaner

For details on handling the engine, please refer to the separate Engine Handling Manual.
The air cleaner is a component that removes dirt from the intake air to prevent wear of the cylinder liners and piston rings so that the engine will always operate smoothly.
A contaminated air cleaner element may cause malfunction of the engine.

1. Make sure that there is no damage to the air cleaner.
2. Make sure that the air cleaner element is not contaminated.

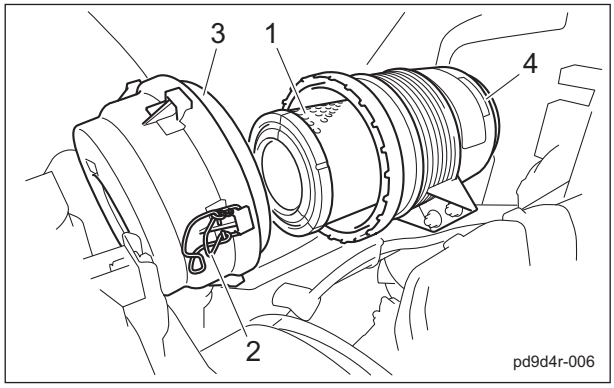

Inspection of Air Cleaner_001

1	Air cleaner element
2	Clip
3	Air cleaner cap
4	Air cleaner body

Cleaning of Air Cleaner

For details on handling the engine, please refer to the separate Engine Handling Manual.
A contaminated air cleaner element may cause malfunction of the engine.
To maximize the life of the engine, clean the air cleaner properly.

1. Follow the steps below to clean the air cleaner.
   [1] Remove the clips from the two locations, and then remove the air cleaner cap.
   [2] Remove the air cleaner element.
   [3] While paying close attention not to damage the air cleaner element, tap a solid portion of the air cleaner element or blow compressed air from its inside to remove dust and dirt.
   [4] Attach the air cleaner element to the air cleaner body.
   [5] Re-place the air cleaner cap, and then fix it securely using the clips.

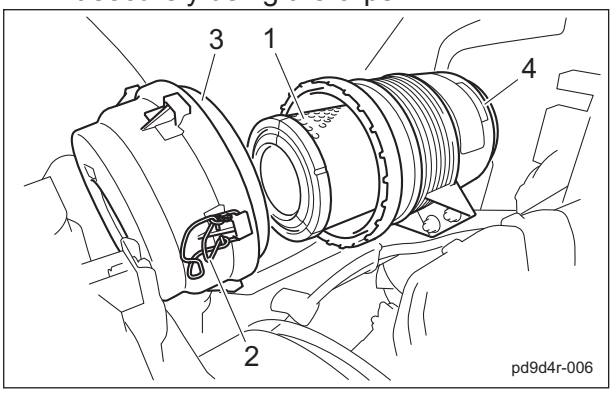

Cleaning of Air Cleaner_001

1	Air cleaner element
2	Clip
3	Air cleaner cap
4	Air cleaner body

Change of Air Cleaner

For details on handling the engine, please refer to the separate Engine Operating Manual.
A contaminated air cleaner element may cause malfunction of the engine.
To maximize the life of the engine, replace the air cleaner element at the appropriate times.

1. The timing for replacing the air cleaner element is described below.
   [1] Replace the air cleaner element in accordance with the Maintenance Schedule.
   [2] If it is significantly contaminated, replace it, even if the hours of operation do not exceed the specified time.
   [3] Even if the hours of operation do not exceed the specified time, change it at least once per year.
2. Replace the air cleaner element in the same manner as cleaning the air cleaner. (See "Cleaning of Air Cleaner" (Page 4-8) .)

https://truckmanualshub.com/

Battery

Inspection of Battery

For details on handling the battery, please refer to the separate Battery Instruction Manual.

Danger

Keep fire away while inspecting or charging the battery.
The battery may explode.

Warning

Do not allow the battery fluid level to become lower than the LOWER LEVEL (minimum fluid level line).
The battery may explode if it is used or charged while the battery fluid level is at the LOWER LEVEL (minimum fluid level line).

1. Clean the areas around the battery fluid level lines using a cloth dampened with water.
2. Make sure that the battery fluid level is between the UPPER LEVEL (maximum fluid level line) and the LOWER LEVEL (minimum fluid level line).

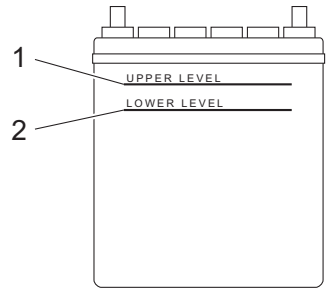

Inspection of Battery_001

1	UPPER LEVEL
2	LOWER LEVEL

Supply of Battery Fluid

For details on handling the battery, please refer to the separate Battery Instruction Manual.

Danger

Be careful not to let your skin, eyes or clothes, etc., come into contact with the battery fluid or accidentally swallow the fluid.
Should your skin or clothes come into contact with the battery fluid, immediately wash them away with water.

Warning

When you supply battery fluid, wear protective garments and safety glasses, etc.

Caution

Implement after the engine and muffler etc. have well cooled down.
Otherwise you may get burned.

1. If the battery fluid level is lower than halfway between the UPPER LEVEL (maximum) line and LOWER LEVEL (minimum) line, add purified water up to the UPPER LEVEL (maximum) line.

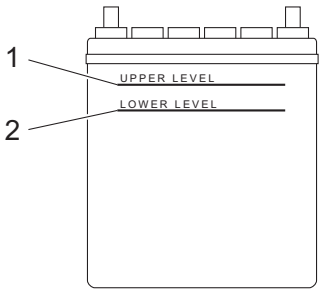

Supply of Battery Fluid_001

1	UPPER LEVEL
2	LOWER LEVEL

https://truckmanualshub.com/

Tire

Inspection of Tires

1. Check the pneumatic pressure of the tires.
2. Make sure that there are no cracks, damage or abnormal wear.

	Tire size	Pneumatic pressure
Front wheel	21 x 11.00 - 10	140 kPa (1.4 kgf/cm^2)
Rear wheel	21 x 11.00 - 10	140 kPa (1.4 kgf/cm^2)

Brake

Inspection of Brake

While traveling, depress the brake pedal firmly to make sure that the brake is applied effectively.

Inspection of Parking Brake

1. Make sure that the parking brake is applied after depressing the brake pedal and pulling the parking brake lever.
2. Make sure that the parking brake is not applied even slightly after depressing the brake pedal to release the parking brake lever.

Inspection of Knife Brake

Make sure that the rotary knife stops rotating within 7 seconds after the knife rotation lever is set from the "ON" position to the "OFF" position.

Belt

Inspection of Belt

Caution

The engine must be stopped when the belt is inspected.

Caution

If you have removed the cover during inspection, make sure that you replace it in the original position securely.
If the cover remains removed, the operator may come in contact with the rotating objects or belt, possibly resulting in injuries.

Important

A slacking or damaged belt or damaged fan may cause overheating or lack of a battery charge.

1. Press the middle of the belt with your finger to check the belt tension.
2. Make sure that there are no cracks, damage or abnormal wear.

Around the Engine

Inspection of Engine-Associated Parts

For details on handling the engine, please refer to the separate Engine Operating Manual.

1. Check the fuel system parts for loosened or cracked joints and leakage. Replace the parts if necessary.
2. Blow compressed air to clean any grass or flammable materials that may be attached inside or around the muffler.

https://truckmanualshub.com/

Engine Oil

Inspection of Engine Oil

For details on handling the engine, please refer to the separate Engine Handling Manual.

> **Important**
>
> Securely tighten the oil level gauge and oil filler cap.

1. Stop the engine, wait for 10 to 20 minutes for the engine to cool down, and then check the oil level.
2. Position the machine so that the engine will be level, then insert the oil gauge all the way to check the oil level.

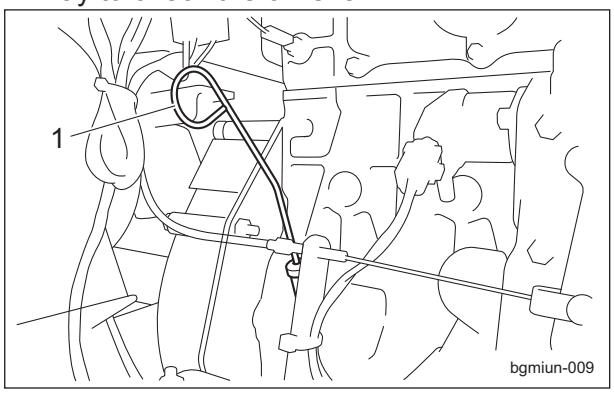

Inspection of Engine Oil_001

1	Oil level gauge

3. The appropriate oil level should be between the upper and lower limit lines on the gauge.

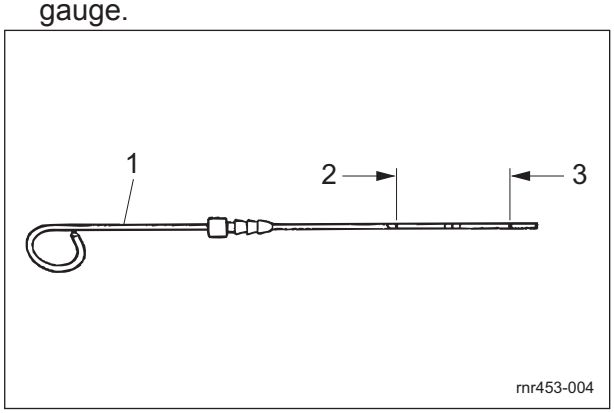

Inspection of Engine Oil_002

1	Oil level gauge
2	Upper limit
3	Lower limit

Supply of Engine Oil

For details on handling the engine, please refer to the separate Engine Handling Manual.

> **Important**
>
> Do not supply too much engine oil. Otherwise, the engine may be damaged.

> **Important**
>
> Do not mix different types of engine oil.

> **Important**
>
> Be sure to use engine oil that is classified as API Service Grade CF or higher, with an SAE Viscosity that is appropriate for the operating environment (ambient temperature).

> **Important**
>
> Securely tighten the oil level gauge and oil filler cap.

1. If the engine oil level is lower than the lower limit line on the oil level gauge, supply engine oil through the oil filling port. Remove the oil filler cap, and then supply new engine oil until the oil reaches a level in between the upper and lower limit lines on the oil level gauge.
2. Re-place the oil filler cap.

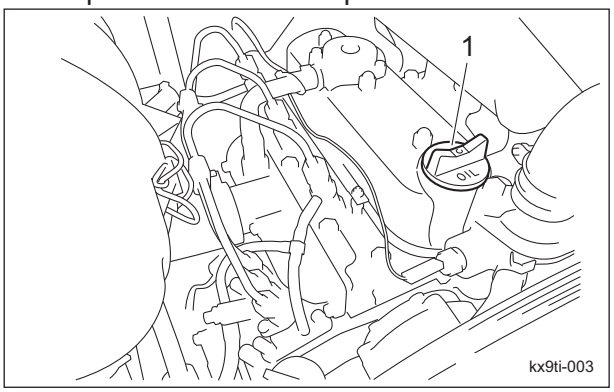

Supply of Engine Oil_001

1	Oil filler cap

3. It will take a while for the supplied engine oil to descend into the oil pan.
   Check the oil level again 10 to 20 minutes after supplying the oil.

https://truckmanualshub.com/

Change of Engine Oil

For details on handling the engine, please refer to the separate Engine Handling Manual.

Warning

When you change the engine oil, be sure to drain it into a bowl and discard it in accordance with local laws and regulations.

Caution

Be careful with hot oil, which could cause burns if it contacts your skin.

Important

Be sure to use engine oil that is classified as API Service Grade CF or higher, with an SAE Viscosity that is appropriate for the operating environment (ambient temperature).

Important

Securely tighten the oil level gauge and oil filler cap.

Change the engine oil more frequently if the engine oil is contaminated, and especially if you use the machine in dusty areas or operate the engine at high loads or in high temperatures.

1. Move the machine onto a level surface, stop the engine, remove the drain plug while the engine oil is warm, and then drain the oil into a bowl.
2. Re-place the drain plug in the engine.

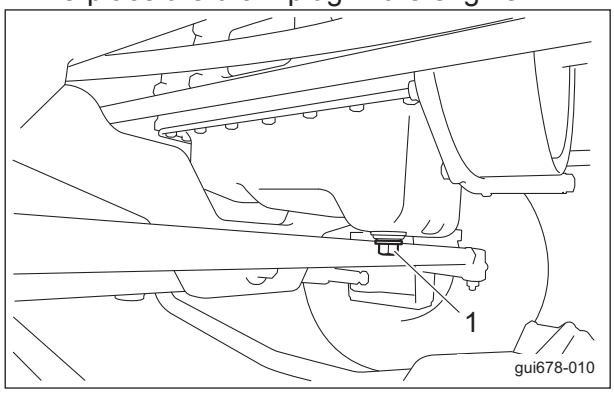

Change of Engine Oil_001

1	Drain plug

3. Through the oil filling port, supply new engine oil until the oil reaches a level in between the upper and lower limit lines on the oil level gauge.
   Engine oil quantity is approximately 3.0 dm^3 (3.0 L).
4. Re-place the oil filler cap.

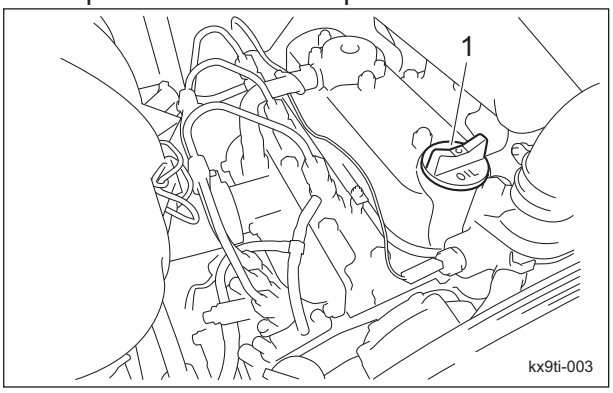

Change of Engine Oil_002

1	Oil filler cap

5. It will take a while for the supplied engine oil to descend into the oil pan.
   Check the oil level again 10 to 20 minutes after supplying the oil.

https://truckmanualshub.com/

Fuel

Inspection of Fuel Quantity

Position the machine so it is level, and then observe the fuel gauge located on the fuel tank to check the fuel level.

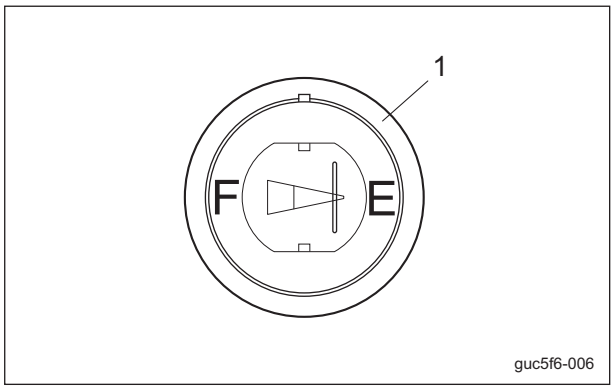

Inspection of Fuel Quantity_001

1	Fuel gauge

Fuel Supply

Danger

Do not supply fuel above F (FULL) level of the fuel gauge.
If you supply too much fuel, it might overflow from the fuel cap when you travel or work on a slope.

Warning

Keep fire away while refueling.
Do not smoke while refueling.

If the fuel gauge located on the fuel tank indicates a level close to E (EMPTY), supply fuel (diesel) at your earliest convenience.
The fuel tank capacity is approximately 23.0 dm^3 (23.0 L).

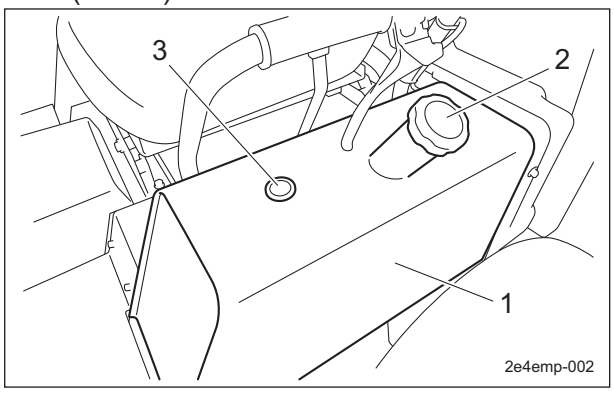

Fuel Supply_001

1	Fuel tank
2	Tank cap
3	Fuel gauge

Oil Leakage

Inspection of Oil Leakage

Caution

When performing maintenance on the hydraulic system, lower the mower units.

After approximately 50 hours of operation, some tightened portions may be loosened and oil may leak.
Be sure to retighten the parts.
Check the bottom of the machine for oil leakage.

https://truckmanualshub.com/

Tightening torques

Standard tightening torques

Bolts and Nuts

Important

A number of bolts are used in each part of this machine.
Be sure to re-tighten the bolts and nuts, because they may be loosened at the earlier stage of the use.

As to the bolts and nuts without any special instruction, tighten them in appropriate tightening torque with proper tool.
Too much tightening may cause the looseness or damage of the screw.
The strength of tightening is determined by types of screws, strength, the friction of thread face or base face and others.
The table below is for the galvanized or parkerized bolts.
In case that the strength of internal thread is weak, it is not applied.
Do not use rusty or sand attached "screw."
Otherwise, it may cause insufficient tightening even if you apply the specified tightening torque.
The friction of the screw face becomes higher and the tightening torque is canceled out by the friction, therefore sufficient tightening cannot be applied.
If "screw" is wet by water or oil, do not tighten it with normal tightening torque.
If the screw is wet, the torque coefficient will get smaller and it may result in too much tightening.
Too much tightening may cause looseness by the screw stretched or result in damage.
Do not use a bolt experienced too much burden.
Using the impact wrench requires the skill.
Do exercise as much as possible for steady tightening.

Nominal diameter	General bolt		
	Strength classification 4.8		
	tib3yb-001		
	N-m	kgf-cm	lb-in
M5	3 - 5	30.59 - 50.99	26.55 - 44.26
M6	7 - 9	71.38 - 91.77	61.96 - 79.66
M8	14 - 19	142.76 - 193.74	123.91 - 168.17
M10	29 - 38	295.71 - 387.49	256.68 - 336.34
M12	52 - 67	530.24 - 683.20	460.25 - 593.02
M14	70 - 94	713.79 - 958.52	619.57 - 831.99
M16	88 - 112	897.34 - 1142.06	778.89 - 991.31
M18	116 - 144	1,182.85 - 1,468.37	1,026.72 - 1,274.54
M20	147 - 183	1,498.96 - 1,866.05	1,301.10 - 1,619.73
M22	295	3,008.12	2,611.05
M24	370	3,772.89	3,274.87
M27	550	5,608.35	4,868.05
M30	740	7,545.78	6,549.74

https://truckmanualshub.com/

Nominal diameter	Heat-treated bolt					
	Strength classification 8.8			Strength classification 10.9		
	tib3yb-002			tib3yb-003		
	N-m	kgf-cm	lb-in	N-m	kgf-cm	lb-in
M5	5 - 7	50.99 - 71.38	44.26 - 61.96	7 - 10	71.38 - 101.97	61.96 - 88.51
M6	8 - 11	81.58 - 112.17	70.81 - 97.36	14 - 18	142.76 - 183.55	123.91 - 159.32
M8	23 - 29	234.53 - 295.71	203.57 - 256.68	28 - 38	285.52 - 387.49	247.83 - 336.34
M10	45 - 57	458.87 - 581.23	398.30 - 504.51	58 - 76	591.43 - 774.97	513.36 - 672.68
M12	67 - 85	683.20 - 866.75	593.02 - 752.34	104 - 134	1,060.49 - 1,366.40	920.50 - 1186.03
M14	106 - 134	1,080.88 - 1,366.40	938.21 - 1,186.03	140 - 188	1,427.58 - 1,917.04	1,239.14 - 1,663.99
M16	152 - 188	1,549.94 - 1,917.04	1,345.35 - 1,663.99	210 - 260	2,141.37 - 2,651.22	1,858.71 - 2,301.26
M18	200 - 240	2,039.40 - 2,447.28	1,770.20 - 2,124.24	280 - 340	2,855.16 - 3,466.98	2,478.28 - 3,009.34
M20	245 - 295	2,498.27 - 3,008.12	2,168.50 - 2,611.05	370 - 450	3,772.89 - 4,588.65	3,274.87 - 3,982.95
M22	-	-	-	530	5,404.41	4,691.03
M24	-	-	-	670	6,831.99	5,930.17
M27	-	-	-	1,000	10,197.00	8,851.00
M30	-	-	-	1,340	14,628.78	11,860.34

Note:
The same values are applied to "fine screw thread."

https://truckmanualshub.com/

Principal tightening torques

Tightening Torque by Model

GM1700_Main body
Tighten the following bolts and nuts at the torque specified in the table.
For thread locking adhesive, apply a middle strength thread locker (ThreeBond 1322 anaerobic adhesives).

Location		Code	Part name	Tightening torque			Thread locking adhesive
				N-m	kgf-cm	lb-in	
Front wheel	Wheel mounting base	K0138240002	24 slotted nut high P1.5	180 - 200	1,835.46 - 2,039.40	1,593.18 - 1,770.20	—
	Wheel	K0011120302	Bolt, 11T, heat-treated M12-30P1.5	67 - 85	683.20 - 833.75	593.02 - 752.34	—
Rear wheel	Wheel mounting base	K0160000492	24 special nut P1.5	180 - 200	1,835.46 - 2,039.40	1,593.18 - 1,770.20	○
	Wheel	K0011120302	Bolt, 11T, heat-treated M12-30P1.5	67 - 85	683.20 - 833.75	593.02 - 752.34	—
Engine base		K0017100252	Bolt, 8T, heat-treated, small, 10-25 P1.25	45 - 57	458.87 - 581.23	398.30 - 504.51	—
		K4040000150	Nut for attaching anti-vibration rubber	29 - 38	295.71 - 387.49	256.68 - 336.34	○
Joint mounting bracket front		K0017100252	Bolt, 8T, heat-treated, small, 10-25 P1.25	45 - 57	458.87 - 581.23	398.30 - 504.51	○
Joint mounting bracket rear		K0010100201	Bolt, heat-treated M10-20	58 - 76	591.43 - 774.97	513.36 - 672.68	○
Joint shaft housing		K0010080302	Bolt, 11T, heat-treated M8-30	14 - 19	142.76 - 193.74	123.91 - 168.17	○
Kingpin stopper		K0010120602	Bolt, 11T, heat-treated M12-60	Nut 52 - 67	530.24 - 683.20	460.25 - 593.02	—
Tie rod		K1610000020	Tie rod end right ass'y slotted nut	45	458.87	398.30	—
		K1611000020	Tie rod end left ass'y slotted nut	45	458.87	398.30	—

https://truckmanualshub.com/

Adjustment Before Operating

Adjustment of Steering Wheel

Warning

Since it is dangerous, do not adjust while traveling.

Caution

Be sure the steering wheel position is securely locked.
It would be extremely dangerous if it becomes loose while traveling.

The steering wheel can be adjusted up or down.
Adjust the position according to the operator's body size.
Shift the tilt lever to the "FREE" position, move the steering wheel to the position that suits your work requirements, and then shift the tilt lever to the "LOCK" position to secure the steering wheel in place.
The tilt lever is located at the left in front of the driver's seat.

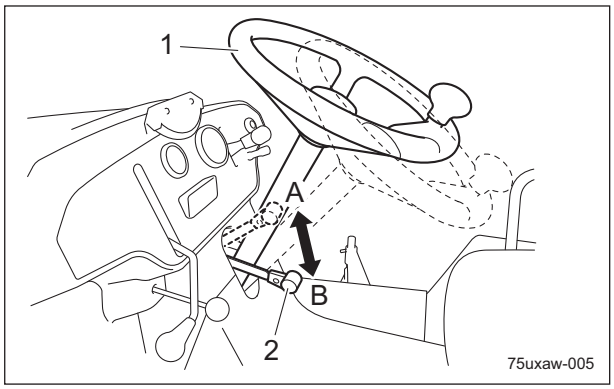

Adjustment of Steering Wheel_001

1	Steering wheel
2	Tilt lever
A	FREE (released)
B	LOCK (locked)

Adjustment of Seat

1. Use the adjustment lever to adjust the seat back and forth.
   Adjust the position according to the operator's body size.
   The adjustment lever is located beneath the front part of the seat.

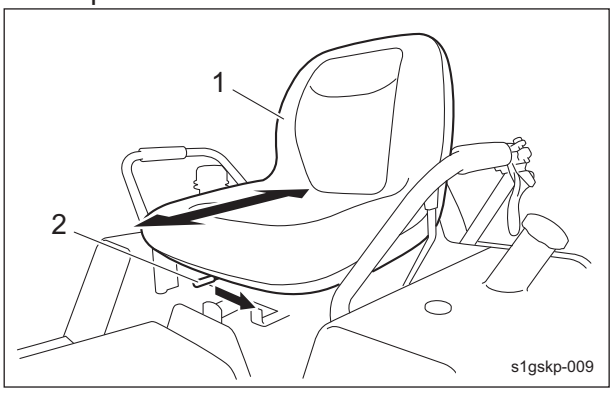

Adjustment of Seat_001

1	Seat
2	Adjustment lever

2. Grip the adjustment lever and swing the seat to the left and right to adjust it to one of five positions.
   Use this to adjust the position while operating on contours.
   The adjustment lever is located at the top of the fuel tank.

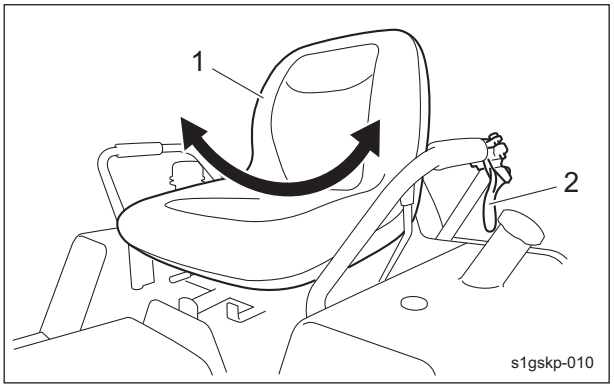

Adjustment of Seat_002

1	Seat
2	Adjustment lever

https://truckmanualshub.com/

Procedure to Start / Stop Engine

Start / Stop of Engine

Procedure to Start Engine

Warning

Before starting the engine, make sure that there are no other people or obstacles around the machine.

Important

Starter operation must take 15 seconds or less.
If the engine does not start, stop using the battery for 30 to 60 seconds to avoid exhausting the battery.

1. Open the fuel cock.

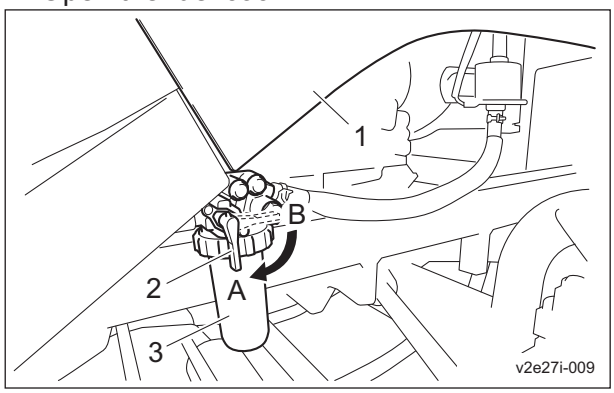

Procedure to Start Engine_001

1	Hood
2	Fuel cock
3	Fuel filter
A	ON (open)
B	OFF (closed)

2. Sit on the seat.
3. Make sure that you have depressed the brake pedal and applied the parking brake lever.
4. Set the knife rotation lever to the "OFF" position.
5. Make sure that the traveling pedal is in the neutral position.
6. Shift the throttle lever halfway from the turtle icon (low speed) to the rabbit icon (high speed) position.

Important

The thermo-start lamp turns off at the specified time. However, the lamp turning off is not related to the glow plug generating heat. If the ignition key is left in the "GLOW" position after the lamp is turned off, the plug will still generate heat. The lamp will stay illuminated for five seconds.

7. Switch the ignition key to the "GLOW" position.

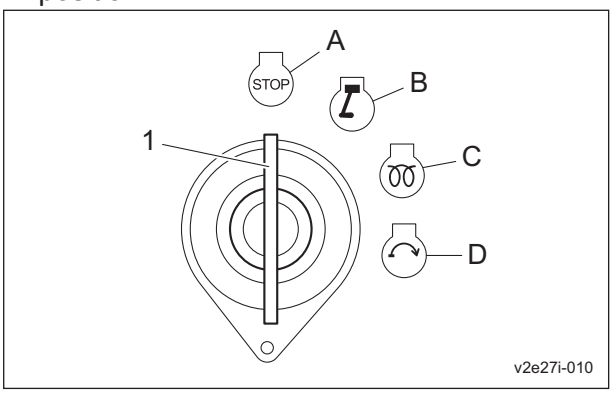

Procedure to Start Engine_002

1	Ignition key
A	OFF
B	ON
C	GLOW
D	START

8. Make sure that the glow plug is generating heat and the thermo-start lamp is turned on.

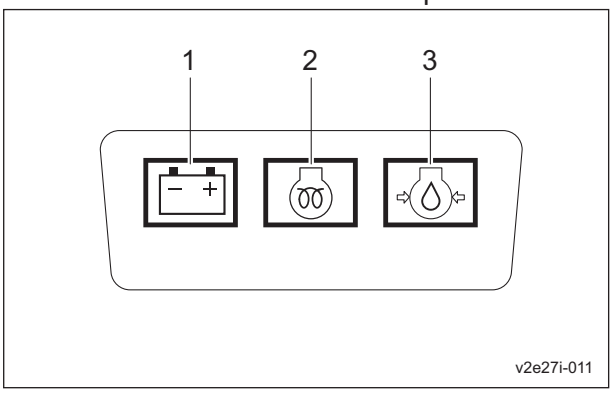

Procedure to Start Engine_003

1	Charge lamp
2	Thermo-start lamp
3	Oil pressure lamp

https://truckmanualshub.com/

> ⚠ Caution
>
> Quickly returning the ignition key from the "START" position to the "ON" position may result in damage to the machine.

9. After the thermo-start lamp turns off, immediately set the ignition key to the "START" position.
10. When the starter starts rotating and the engine starts, return the ignition key to the "ON" position slowly.
11. Make sure that the charge lamp and engine oil pressure lamp turn off.
    If they do not turn off, stop the engine and inspect the machine.
12. Engage the throttle lever to the turtle icon (low speed), and then warm up the engine for 1-2 minutes.
13. Gradually move the throttle lever to the rabbit icon (high speed).

Procedure to Stop Engine

1. Set the traveling pedal to the neutral position.
2. Depress the brake pedal, and then apply the parking brake lever.
3. Set the knife rotation lever to the "OFF" position.
4. Shift the throttle lever to the turtle icon (low speed), and then idle the machine for 1-2 minutes.
5. Switch the ignition key to the "OFF" position.
6. Make sure that the engine has stopped.
7. Remove the ignition key.
8. Leave the driver's seat.
9. Close the fuel cock.

Safety Mechanisms

This machine features a safety device for starting/stopping the engine.

1. As for starting the engine, the safety device prevents the engine from starting unless it meets each of the following four conditions.
   - An operator is sitting on the seat.
   - The parking brake is applied.
   - The knife rotation lever is set to the "OFF" position.
   - The traveling pedal is set to the neutral position.
2. The safety device will be activated and will stop the engine under any of the following conditions:
   - The operator leaves the seat without applying the parking brake.
   - The operator leaves the seat while the knife is rotating.
   - The traveling pedal is operated while the parking brake is applied and the operator is away from the seat.

Warning Mechanisms

This machine features a warning mechanism for overheating.

1. If water temperature inside the engine exceeds 105 degrees Celsius, a buzzer will sound. (intermittent tone)

https://truckmanualshub.com/

Operation of Each Section

Precautions for Operating the Machine

Caution

Under any circumstances drive the machine at such a speed that you can stop it immediately for emergencies.

Cautions for when You Leave the Machine

Caution

If the brakes are not sufficiently effective, use the wheel stoppers to secure the machine.

Instruction Decals

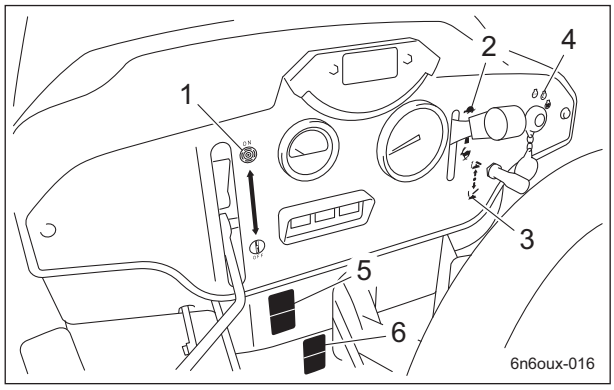

Instruction Decals_001

1	Knife rotation/stop icons
2	Engine speed icons
3	Mower unit up/down icons
4	Key switch icons
5	Sticker, parking brake
6	Decal, lever tilt steering

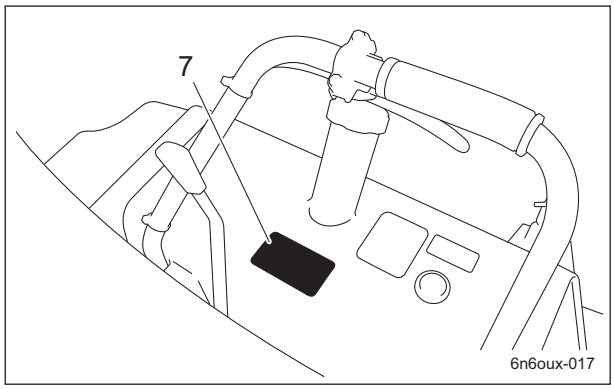

Instruction Decals_002

7	Decal, lever changing 2WD/4WD

https://truckmanualshub.com/

1	Knife rotation/stop icons These indicate positions for rotating and stopping the rotary knife. 1. Rotate 2. Stop	 6n6oux-018
2	Engine speed icons These indicate positions for low and high engine speeds. 1. Low speed 2. High speed	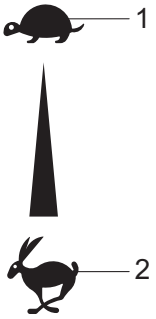 6n6oux-019
3	Mower unit up/down icons These indicate positions for raising and lowering the mower unit. 1. Raised 2. Neutral 3. Lowered	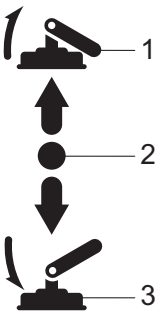 6n6oux-020
4	Key switch icons These indicate the key switch positions. 1. OFF 2. ON 3. GLOW 4. START	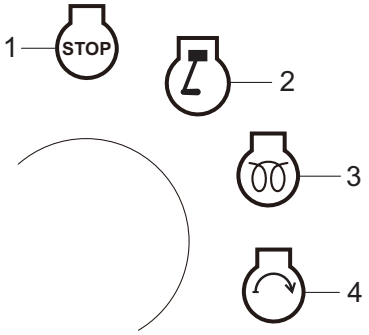 6n6oux-021

https://truckmanualshub.com/

5	K4203001340 Sticker, parking brake This shows how to lock and release the parking brake. 1. Locked 2. Released	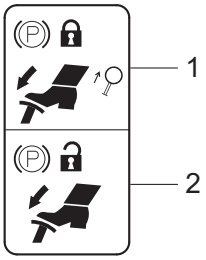 6n6oux-013
6	K4203001500 Decal, lever tilt steering This shows the steering tilt directions and how to lock and release the position.	 6n6oux-022
7	K4203001510 Decal, lever changing 2WD/4WD This shows 2WD/4WD selection.	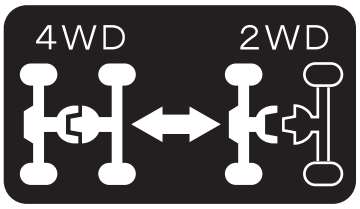 6n6oux-023

https://truckmanualshub.com/

Throttle Lever

The throttle lever is located in the operation panel and enables you to adjust the engine rpm.
Move the throttle lever toward the rabbit icon (high speed) to increase the engine rpm, and toward the turtle icon (low speed) to reduce the rpm.
Note:
The factory default engine rpm (maximum) is set to 2,800 rpm.

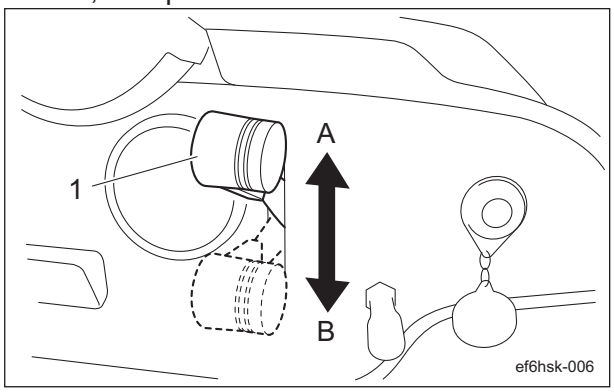

Throttle Lever_001

1	Throttle lever
A	Low speed
B	High speed

Mower Unit Up/Down Switch

Caution

Before raising or lowering the mower units, make sure that there are no people around the machine.

The mower unit up/down lever is located in the operation panel and raises or lowers the mower units.
When the lever is shifted to the "DOWN" position, the mower units are lowered. When the lever is shifted to the "UP" position, the mower units are raised.
Release the switch to return it to the neutral position.

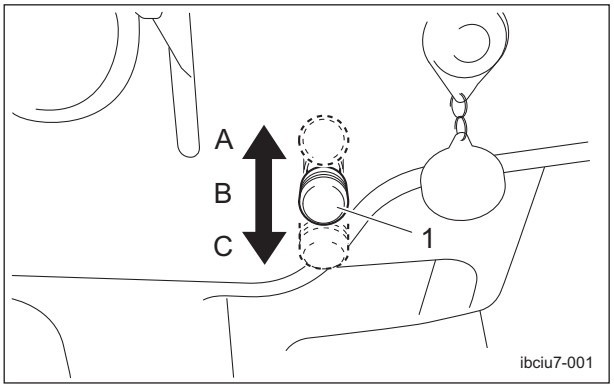

Mower Unit Up/Down Switch_001

1	Mower unit up/down switch
A	Raise
B	Neutral
C	Lower

https://truckmanualshub.com/

Knife Rotation Lever

Caution

Just before you start cutting work, set the knife rotation lever to the "ON" position. At all other times, make sure it is set to the "OFF" position.

The knife rotation lever is located in the operation panel and controls the rotation of the rotary knives.
When the knife rotation lever is set to the "ON" position, all rotary knives rotate. When the knife rotation lever is set to the "OFF" position, all rotary knives stop.
When the mower units are raised, the rotary knives rotate if the lever is set to the "ON" position.

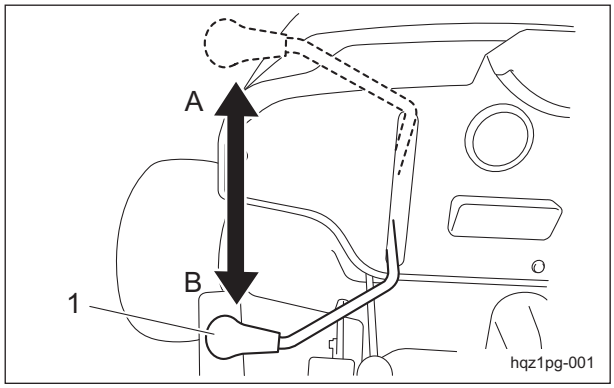

Knife Rotation Lever_001

1	Knife rotation lever
A	ON
B	OFF

2WD/4WD Selector Lever

Caution

When working on a slope, be sure to use the machine in 4WD.

Caution

When traveling, be sure to stop the rotation of the knives and raise the mower units.

The 2WD/4WD selector lever is located to the left of the driver's seat.
When the 2WD/4WD selector lever is set to the "2WD" position, the machine will be in two-wheel drive (rear-wheel drive). When it is set to the "4WD" position, the machine will be in four-wheel drive.

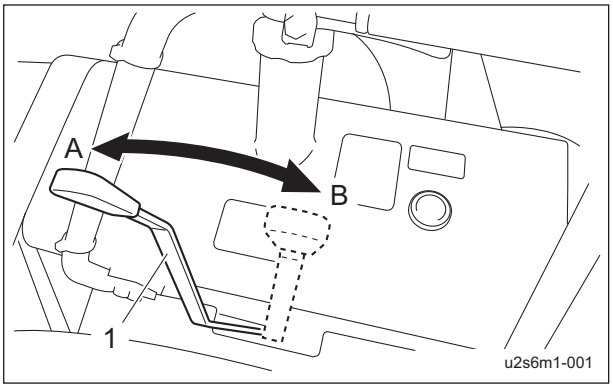

2WD/4WD Selector Lever_001

1	2WD/4WD selector lever
A	4WD
B	2WD

https://truckmanualshub.com/

Traveling Pedal

Warning

This machine is not authorized as a special motor vehicle. Do not drive it on public roads.

Caution

When the machine is traveling at a high speed, it will not stop immediately after you take your foot off the traveling pedal.
If necessary, also use the brake.

The traveling pedals are located in the right foot area and control forward and reverse operation of the machine.
When the forward pedal (inside) is depressed, the machine travels forward. When the reverse pedal (outside) is depressed, the machine travels in reverse.
The speed changes in accordance with how much the pedal is depressed.
When you take your foot off the pedal, the machine stops automatically.

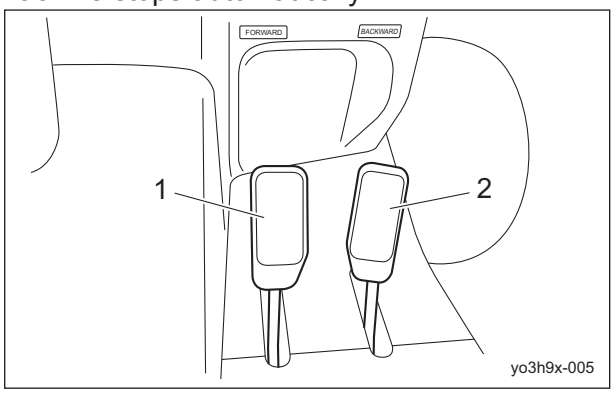

Traveling Pedal_001

1	Forward pedal
2	Reverse pedal

Brake Pedal

The brake pedal is located in the left foot area.
To stop the machine, depress the brake pedal all the way firmly.

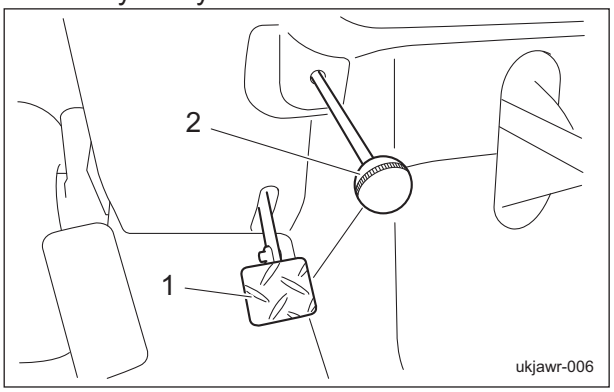

Brake Pedal_001

1	Brake pedal
2	Parking brake lever

Parking Brake Lever

Caution

Be sure to release the parking brake before driving.
It may result in the brakes or hydraulic system malfunction.

Caution

Never park the machine on a slope.

The parking brake lever is located to the left of the front cover.
To park the machine, depress the brake pedal and pull the parking brake lever completely.
To release the parking brake, depress the brake pedals.

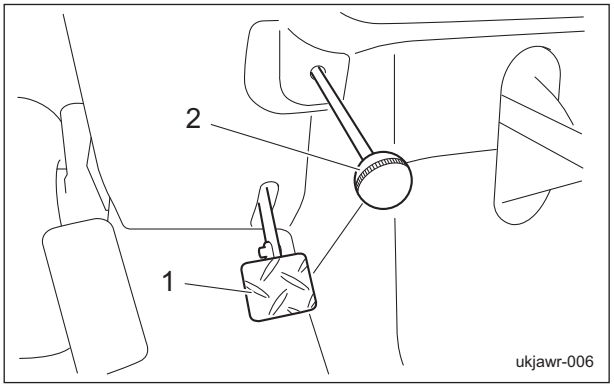

Parking Brake Lever_001

1	Brake pedal
2	Parking brake lever

https://truckmanualshub.com/

Hood

Caution

Do not open the hood in strong winds.

Caution

Be careful not to pinch your fingers when you open or close the hood.

1. Remove the bolt and nut.
2. Unlock the rubber catch, and then lift up the hood.

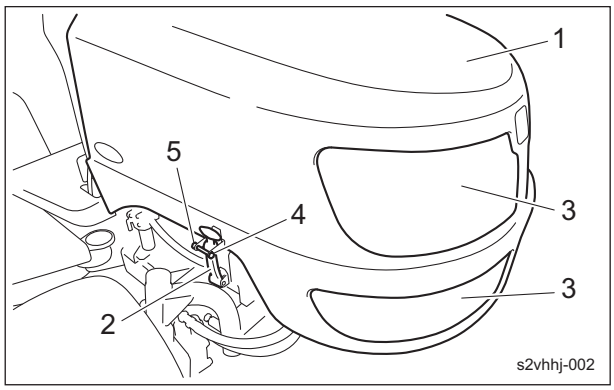

Hood_001

1	Hood
2	Rubber catch
3	Intake
4	Bolt
5	Nut

3. Lift the hood and check that the hood support rod is secured effectively.
   Make sure that the hood will not close, and then remove your hands.

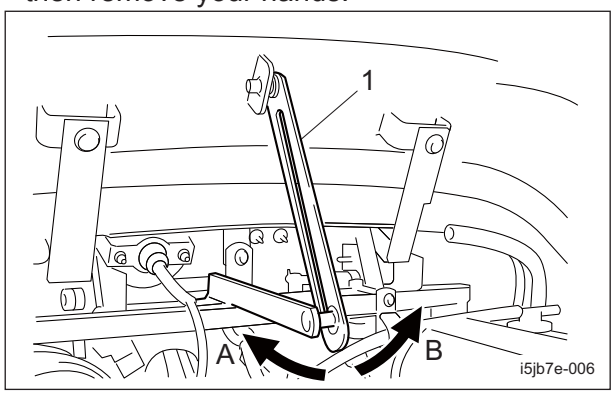

Hood_002

1	Hood support rod
A	Secure
B	Released

4. To close the hood, release the hood support rod, and then lower the hood slowly.
5. Lock the rubber catch securely.
6. Install the bolt and nut.

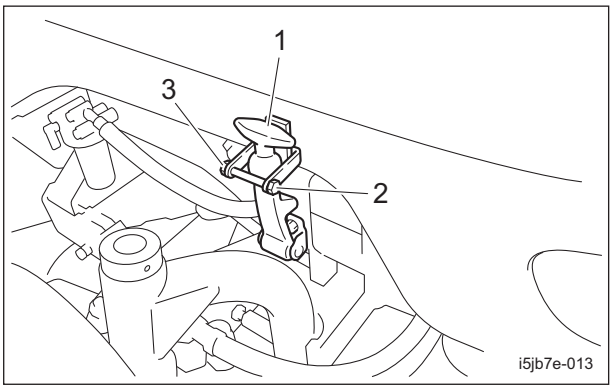

Hood_003

1	Rubber catch
2	Bolt
3	Nut

Rear Cover

Caution

Be careful not to pinch your fingers when you open or close the cover.

1. Bring the seat to the most front position.
2. Remove the bolt on both sides of the rear cover.

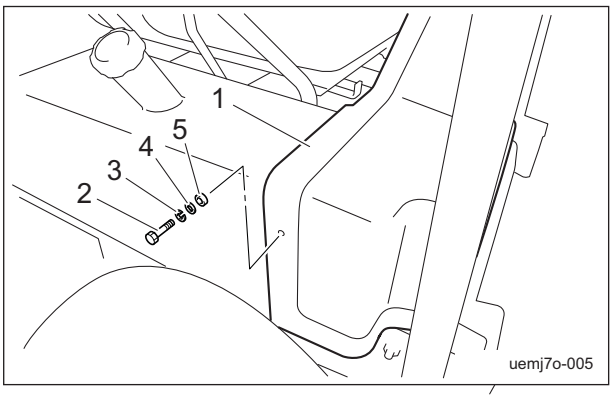

Rear Cover_001

1	Rear cover
2	Bolt
3	Spring washer
4	Washer
5	Rubber washer

3. Remove the rear cover.

https://truckmanualshub.com/

Center Cover

> **Caution**
>
> Be careful not to pinch your fingers when you open or close the cover.

1. Bring the seat to the backmost position.
2. Completely raise the steering wheel.
3. Remove the bolt on both sides of the center cover.

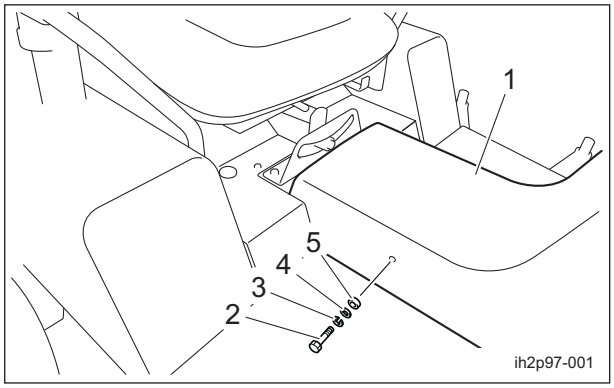

Center Cover_001

1	Center cover
2	Bolt
3	Spring washer
4	Washer
5	Rubber washer

4. Remove the center cover.

Seatback Cover

Note:
Follow the same steps to remove the left and right seatback covers.

1. Bring the seat to the frontmost position.
2. Remove the rear cover.
3. Remove the grommet.
   Note:
   The wire is removed together with the grommet.

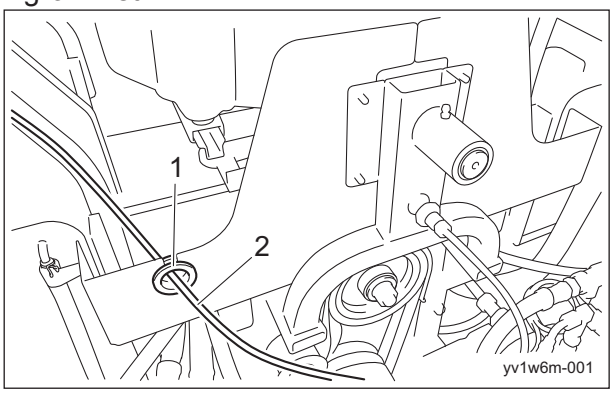

Seatback Cover_001

1	Grommet
2	Wire

4. Swing the seat to tilt it.
   Note:
   Tilt the seat so that the cover to be removed is facing down.
5. Remove the bolts mounting the seatback cover.

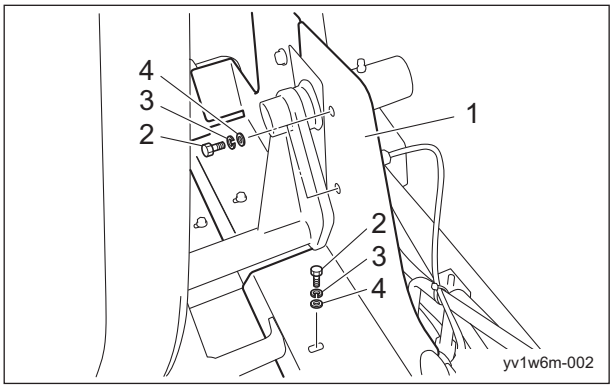

Seatback Cover_002

1	Seatback cover
2	Bolt
3	Spring washer
4	Washer

6. Remove the seatback cover.

https://truckmanualshub.com/

Underseat Cover

Caution

Be careful not to pinch your fingers when you open or close the underseat cover.

Note:
Follow the same steps to remove the left and right underseat covers.

1. Remove the rear cover.
2. Remove the seatback cover.
3. Swing the seat to tilt it.
4. Remove the bolts mounting the underseat cover.

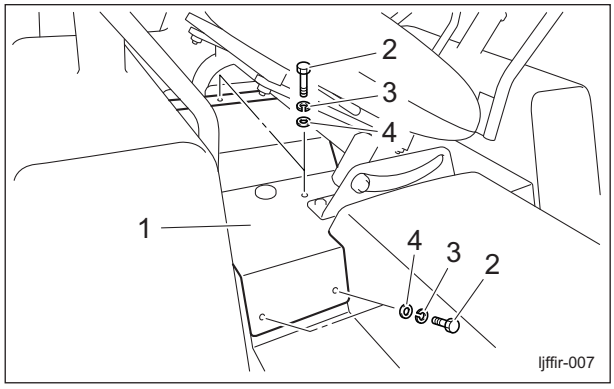

Underseat Cover_001

1	Underseat Cover
2	Bolt
3	Spring washer
4	Washer

5. Remove the underseat cover.

Instruments

Instruments on the Operation Panel

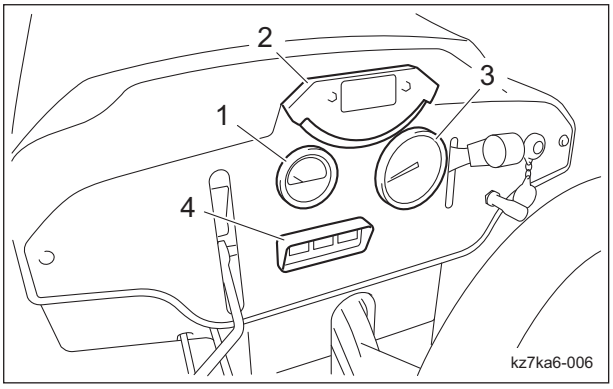

Instruments on the Operation Panel_001

1	Water temperature gauge
2	Angle meter
3	Tachometer/Hour meter
4	Pilot lamps (charge lamp, thermo-start lamp, oil pressure lamp)

Tachometer/Hour Meter

The tachometer and hour meter are located in the operation panel.
The tachometer indicates the engine rpm.
The hour meter indicates total operation time of the engine.
Every six minutes of engine operation will increase the number at the first digit (black number on a white background) by one. Every one hour of engine operation will increase the number at the next digit (white number on a black background) by one.

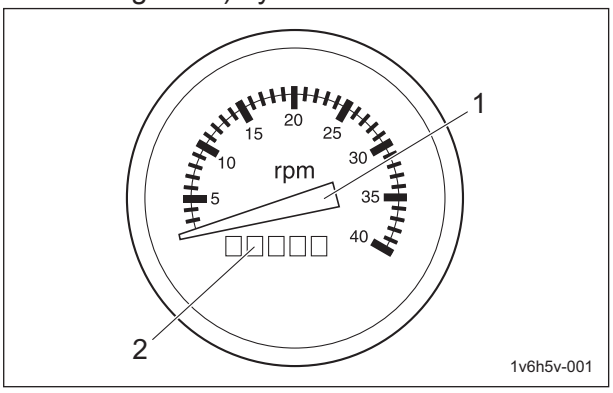

Tachometer/Hour Meter_001

1	Tachometer
2	Hour meter

https://truckmanualshub.com/

Water Temperature Gauge

The water temperature gauge is located in the operation panel.
This instrument indicates the water temperature inside the engine.
If the water temperature gauge indicates a level close to "H" during operation, the machine is overheated.
Remove the load from the engine, idle the machine for five minutes, stop the engine, and then inspect the machine and perform any necessary maintenance.
If the water temperature exceeds 105 degrees Celsius, a buzzer will sound.(Intermittent tone)

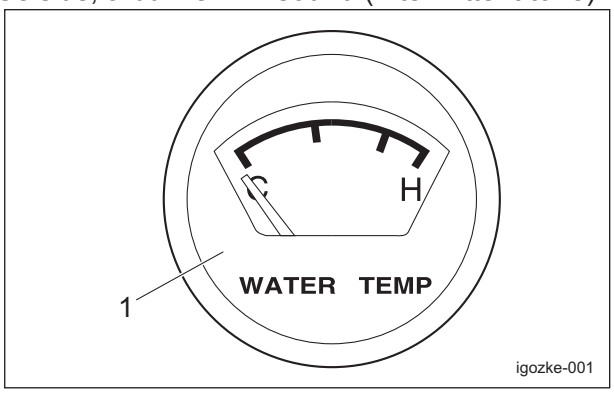

Water Temperature Gauge_001

1	Water temperature gauge

https://truckmanualshub.com/

Pilot Lamps

Charge Lamp

The charge lamp is the left pilot lamp located in the operation panel.
It turns on when the ignition key is set to the "ON" position before the engine starts. It turns off when the engine starts and the alternator starts operating properly.
If this lamp illuminates while you are operating the machine, stop the engine immediately, and then inspect the machine and perform any necessary maintenance.

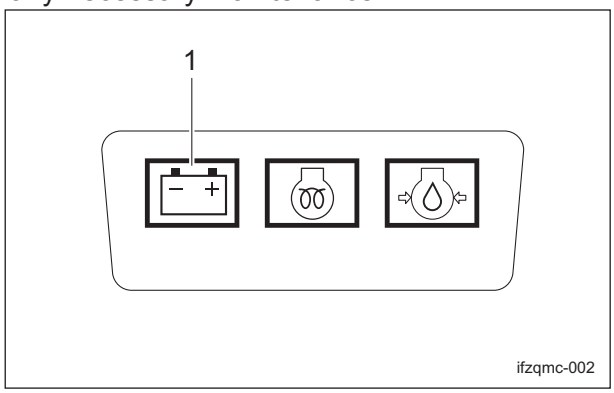

Charge Lamp_001

1	Charge lamp

Thermo-start Lamp

The thermo-start lamp is the middle pilot lamp located in the operation panel.
When the ignition key is set to the "GLOW" position, it illuminates as the glow plug generates heat.
Illumination of the thermo-start lamp is controlled by the glow lamp timer, and the lamp is turned off after a specified amount of time passes.
The duration of illumination indicates an approximate period of time required for warm-up, and has been fixed at five seconds.

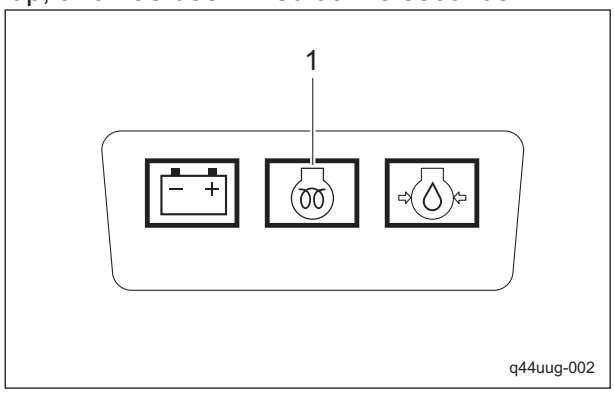

Thermo-start Lamp_001

1	Thermo-start lamp

Oil Pressure Lamp

The oil pressure lamp is the right pilot lamp located in the operation panel.
It turns on when the ignition key is set to the "ON" position before the engine starts. It turns off when the engine starts and engine oil pressure is generated properly.
If this lamp illuminates while you are operating the machine, stop the engine immediately, and then inspect the machine and perform any necessary maintenance.

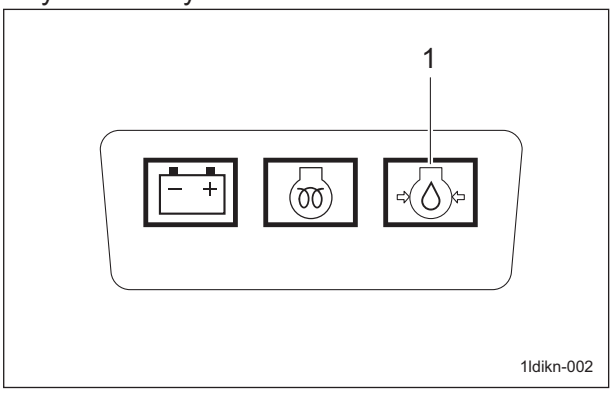

Oil Pressure Lamp_001

1	Oil pressure lamp

Angle Meter

The angle meter is located in the operation panel.
This instrument indicates the angle of the machine position.

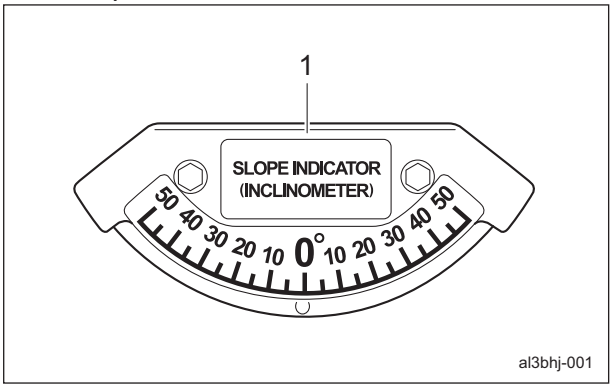

Angle Meter_001

1	Angle meter

https://truckmanualshub.com/

Travel of Machine

Traveling Procedure

1. Start the engine. (See "Procedure to Start Engine" (Page 4-18) .)
2. Raise the mower units.
3. Depress the brake pedal to release the parking brake.
4. Slowly depress the traveling pedal.
5. The machine will start to move.

Towing the Machine

If the machine does not travel due to engine trouble, etc., you can move it by towing it.

Caution

Do not touch the unload valve except when towing the machine.

Caution

Do not turn the unload valve more than one rotation.

Caution

Before restarting the engine, be sure to close the unload valve.

1. Stop the engine. (See "Procedure to Stop Engine" (Page 4-19) .)
2. Apply the parking brake and chock the wheels.
3. Set the 2WD/4WD selector lever to the "2WD" position.
4. Remove the underseat cover on the right side.
5. Turn either of the unload valves by one rotation to loosen it.

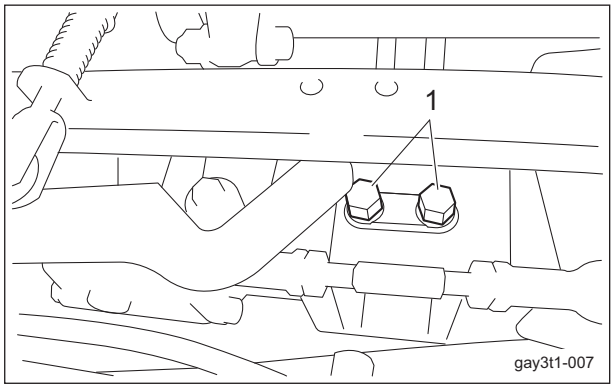

Towing the Machine_001

1	Unload valve

6. Remove the wheel stoppers.
7. Depress the brake pedal to release the parking brake.
8. Tow the machine slowly.

Cutting Work

Cutting Operation

Warning

Do NOT start to move or stop the machine abruptly.
To do so is very dangerous. In addition, it may damage the hydraulic system or result in oil leakage.

Caution

Cutting work must be performed at an appropriate speed for the site and location. When cutting bumpy surfaces, keep the engine rpm steady, and slow down the cutting speed.

1. Start the engine.(See "Procedure to Start Engine" (Page 4-18) .)
2. Shift the mower unit up/down switch to the "UP" position to raise the mower units.
3. Depress the brake pedal to release the parking brake.
4. Shift the throttle lever to the rabbit icon (high speed) to run the engine at the maximum rpm.
5. Shift the mower unit up/down switch to the "DOWN" position to lower the mower units.
6. Slowly set the knife rotation lever to the "ON" position to rotate all rotary knives.
7. Depress the traveling pedal to start cutting work.

Note:
While operating on a slope, adjust the angle of the seat for better comfort.

https://truckmanualshub.com/

Transporting

Transporting Procedure

When loading the machine into a trailer or a truck to transport it, drive the machine forward. When unloading, drive the machine in reverse.
If the roof is installed on the machine, remove it.
The roof may be damaged by wind pressure.

https://truckmanualshub.com/

Maintenance Precautions ..... Page 5-2

Maintenance Schedule ..... Page 5-3

Specified Values ..... Page 5-5
Main Consumable Parts ..... Page 5-5

Jacking up the machine ..... Page 5-6

About the Jacking up the machine ..... Page 5-6
Jack-up Points ..... Page 5-6

Greasing ..... Page 5-8

About Greasing ..... Page 5-8
Greasing Points ..... Page 5-8

Maintenance (Main Body) ..... Page 5-11

Removing/Installing Tires ..... Page 5-11
Adjustment of Belt Tension ..... Page 5-12
Adjustment of Brake ..... Page 5-13
Adjustment of Knife Brake ..... Page 5-14
Adjusting the Neutral Position of the Piston Pump ..... Page 5-14
Change of Hydraulic Oil Filter ..... Page 5-15
Change of Transmission Oil ..... Page 5-16
Change of Fuse ..... Page 5-17

Long-Term Storage ..... Page 5-17

Before Long-Term Storage ..... Page 5-17

https://truckmanualshub.com/

Maintenance

Maintenance Precautions

Caution

First, learn well the maintenance operations you plan to perform.

Caution

Use tools appropriate for each maintenance operation.

Caution

For the safe and best performance of your machine, use Baroness genuine parts for replacement and accessories.
Please note that our product warranty may be void if you use non-genuine parts for replacement or accessories.

https://truckmanualshub.com/

Maintenance Schedule

GM1700
Follow the maintenance schedule below.
○・・・Inspect, adjust, supply, clean
●・・・Replace (first time)
△・・・Replace

	Maintenance item	Before work	After work	Every 8 hrs.	Every 50 hrs.	Every 100 hrs.	Every 200 hrs.	Every 250 hrs.	Every 400 hrs.	Every 500 hrs.	Every year	Every 2 years	Every 4 years	Remarks
Engine	Tightening the parts	○												
	Fuel	○												
	Air cleaner	-	-	-	-	-	-	-	-	-	-	-	-	-
	Engine oil	○		●	△									8 hrs. (first time)
	Engine oil filter	○			●	△								50 hrs. (first time)
	Ignition plug	-	-	-	-	-	-	-	-	-	-	-	-	-
	Radiator	○												
	Oil cooler	-	-	-	-	-	-	-	-	-	-	-	-	-
	Coolant	○			△									
	Fan belt	○									△			
	Battery	○										△		
	Battery fluid	○												
	Cleaning the exterior	○												
Main body	Tightening the parts	○												
	Interlock system	○												
	Emergency switch	-	-	-	-	-	-	-	-	-	-	-	-	-
	Electrical wiring										○			
	Knife	-	-	-	-	-	-	-	-	-	-	-	-	-
	Steering chain	-	-	-	-	-	-	-	-	-	-	-	-	-
	Cutting height	-	-	-	-	-	-	-	-	-	-	-	-	-
	Greasing, oiling				○									
	Tire	○												
	Rubber crawler	-	-	-	-	-	-	-	-	-	-	-	-	-
	V-belt	○									△			
	Brake	○												
	Wire	○					△							
	Cover	○												
	Oil leakage	○												
	Hydraulic oil	○				●				△				100 hrs. (first time)
	Hydraulic oil filter					●				△				100 hrs. (first time)

https://truckmanualshub.com/

Maintenance

	Maintenance item	Before work	After work	Every 8 hrs.	Every 50 hrs.	Every 100 hrs.	Every 200 hrs.	Every 250 hrs.	Every 400 hrs.	Every 500 hrs.	Every year	Every 2 years	Every 4 years	Remarks
Main body	Hydraulic motor oil	-	-	-	-	-	-	-	-	-	-	-	-	-
	Power unit oil	-	-	-	-	-	-	-	-	-	-	-	-	-
	Transmission oil	○			●						△			
	Hydraulic hose (moving part)	○										△		
	Hydraulic hose (fixed part)	○											△	
	Air cleaner	○					△				△			See "Replacement of Air Cleaner".
	Electromagnetic pump filter	-	-	-	-	-	-	-	-	-	-	-	-	-
	Fuel strainer					○					△			
	Fuel pipe	○												
	Cleaning the exterior	○												
By model (operating machine)	Brake (knife)	○												
By model (mower unit)	Tightening the parts	○												
	Knife	○												
	Cutting height	○												
	Greasing, oiling				○									
	Tire (cutting height gauge wheel)	○												
	V-belt	○									△			
	Cover	○												
	Grease (gearbox)										△			
	Cleaning the exterior	○												

For the maintenance schedule of the items unlisted above, refer to the Owner's Manual for the engine.
The values for consumables are not guaranteed.
Replace the steering cylinder hoses every 2 years.

https://truckmanualshub.com/

Specified Values

Fuel tank capacity	Approximately 23.0 dm^3 (23.0 L)	
Transmission oil capacity	0.45 dm^3 (0.45 L)	Transmission gear oil #90
Hydraulic tank capacity	Approximately 22.0 dm^3 (22.0 L)	Shell Tellus S2M46 or equivalent
Quantity of engine oil	Approximately 3.0 dm^3 (3.0 L)	Summer: SAE30, Winter: SAE20
Coolant volume	Approximately 6.0 dm^3 (6.0 L)	Including reserve tank
Front tire	140 kPa (1.4 kgf/cm^2)	21 x 11.00 - 10
Rear tire	140 kPa (1.4 kgf/cm^2)	21 x 11.00 - 10
Tension spring	40.0 ㎜	Total length of spring (with knife rotation lever in "ON" position)
Tension return spring	50.0 mm	Total length of spring (with knife rotation lever in "OFF" position)

Main Consumable Parts

Part Name	Code
Fan belt	PF1G345-9701-0
Oil element	PF16271-3209-3
Air cleaner element	PFT0270-1632-0
Fuel filter element	PF1G313-4301-1
Hydraulic cartridge filter	K3412000050
Hydraulic oil (20 L can)	K2913100200
Brake wire, left	K1120182500
Brake wire, right	K1120199500
Throttle wire	K1110063000
Tension wire	K1140231500
Brake shoe, front right	P741-8005-00
Brake shoe, rear right	P741-8007-00
Brake shoe, front left	P741-8006-00
Brake shoe, rear left	P741-8008-00
Shoe COMP (knife)	GM1700-6104Z0
V-belt GLB37AG-6A (tension)	K2346037000

https://truckmanualshub.com/

Jacking up the machine

About the Jacking up the machine

Warning

When replacing a tire or beginning any other maintenance or repairs, be sure to chock the wheels to prevent the machine from moving.
Before jacking up the machine, park it on a hard, flat surface such as a concrete floor and remove any obstacles that could prevent you from performing the work safely.
When necessary, use an appropriate chain block, hoist, or jack.
Support the machine securely with jack stands or appropriate blocks.
Failure to do so may cause the machine to move or fall, resulting in injury or death.

Use the jack-up points identified in this manual when jacking up the machine.
Only place a jack under the jack-up points specified.
Placing a jack at any other point could result in damage to the frame or other parts.

Jack-up Points

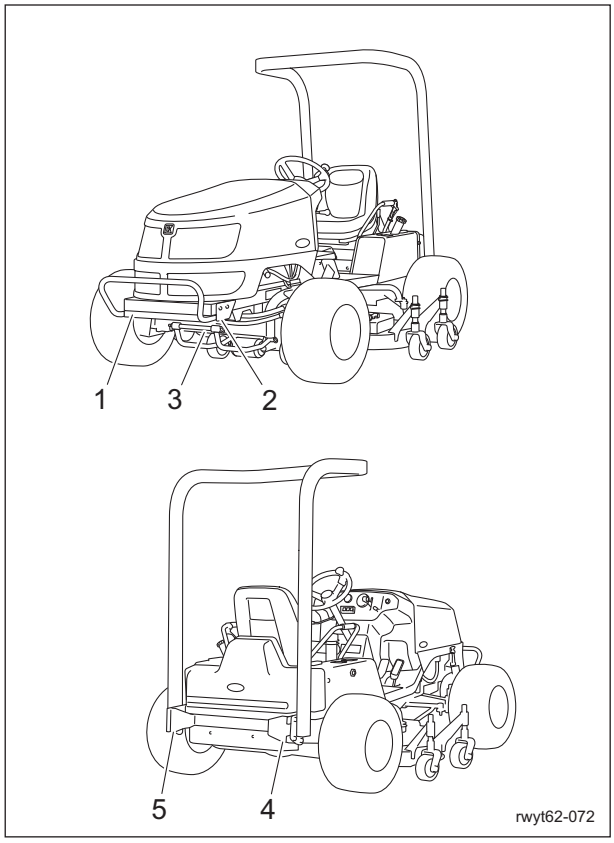

Jack-up Points_001

	Jack-up Points
1	Front right frame
2	Front left frame
3	Center of pivot
4	Rear right frame
5	Rear left frame

1. Front right frame

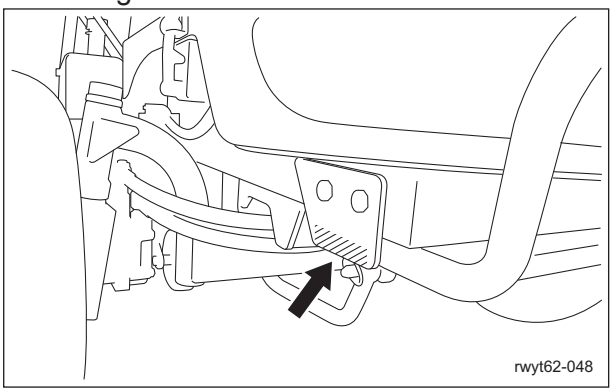

Jack-up Points_002

2. Front left frame

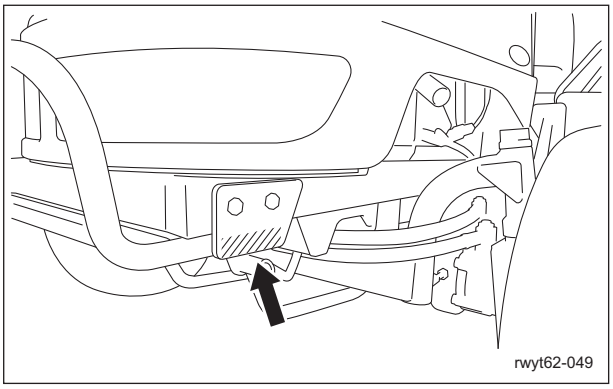

Jack-up Points_003

3. Center of pivot

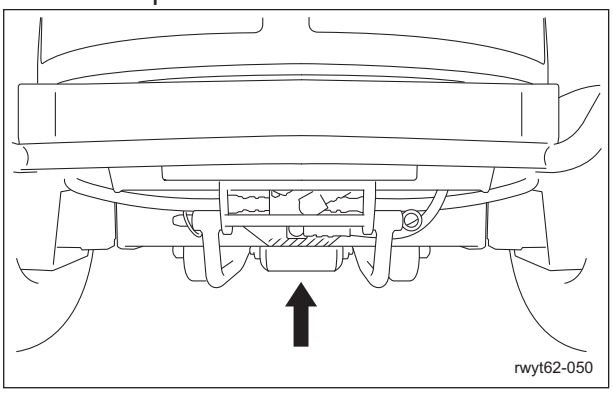

Jack-up Points_004

https://truckmanualshub.com/

4. Rear right frame

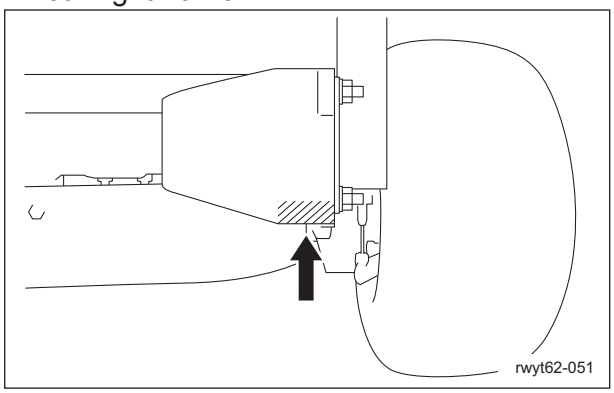

Jack-up Points_005

5. Rear left frame

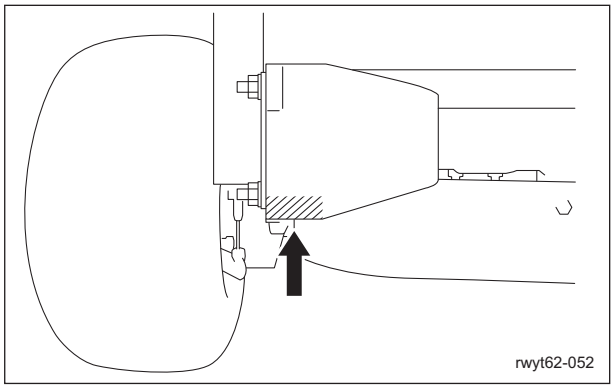

Jack-up Points_006

https://truckmanualshub.com/

Greasing

About Greasing

Since there may be adhesion or damage due to lack of grease on moving parts, they must be greased.
Add urea-based No. 2 grease in accordance with the Maintenance Schedule.
Other locations where the specified grease or lubricant is used are indicated in "Greasing Points".
Add grease using the specified grease or lubricant.

Greasing Points

Grease nipples are installed in the following locations.
Add grease every 50 hours of operation.

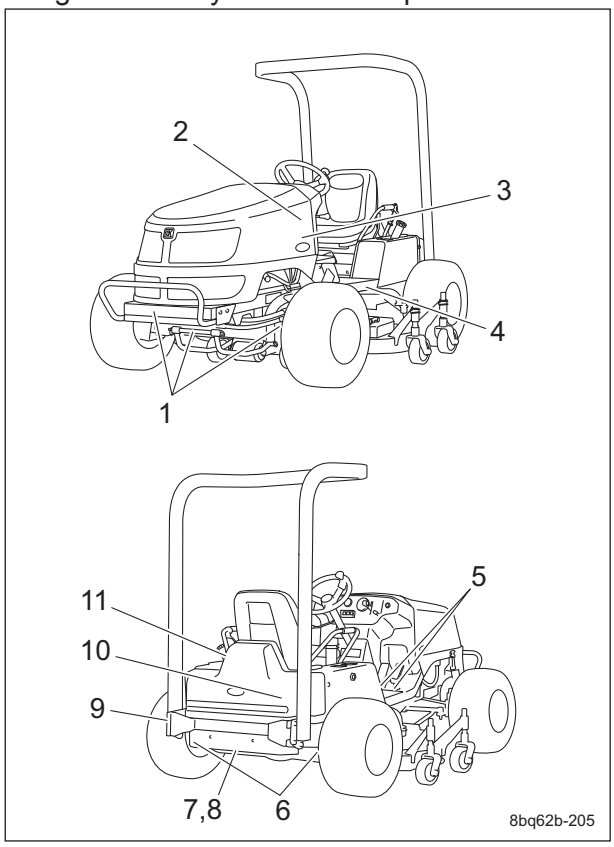

Greasing Points_001

	Location	No. of Greasing Points
1	Pivot	3
2	Knife rotation lever fulcrum	1
3	Brake pedal shaft fulcrum	1
4	Chain wheel mounting shaft fulcrum	2
5	Traveling pedal shaft fulcrum	2
6	Brake lever shaft	2
7	Joint fulcrum	2
8	Joint connector	1
9	Tension shaft fulcrum	1
10	Cam lever shaft fulcrum	1
11	Seat mounting bracket	1

1. Pivot
   Jack up the machine and apply grease.
   Middle between the front wheels

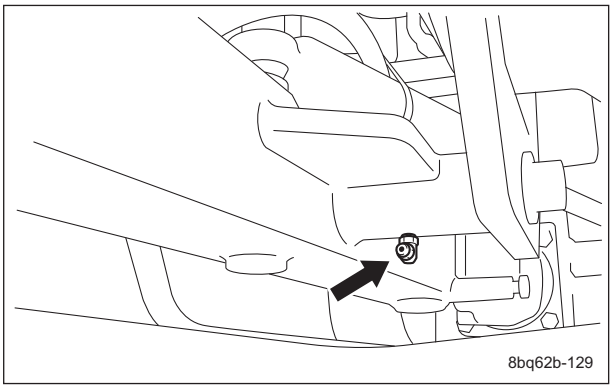

Greasing Points_002

Front right wheel

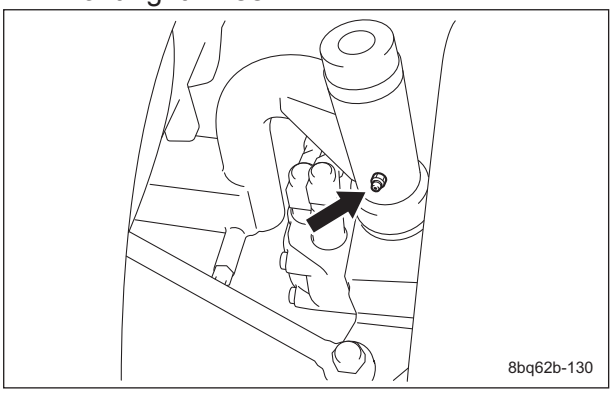

Greasing Points_003

https://truckmanualshub.com/

Front left wheel

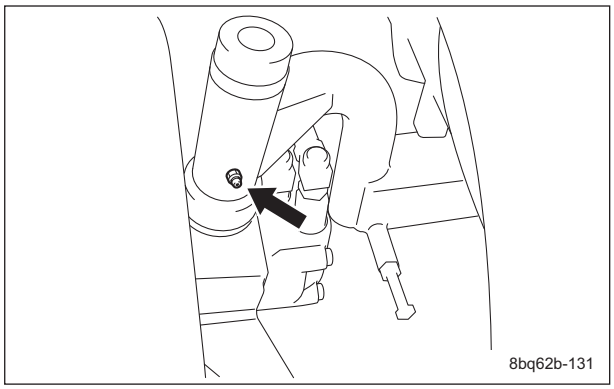

Greasing Points_004

2. Knife rotation lever fulcrum

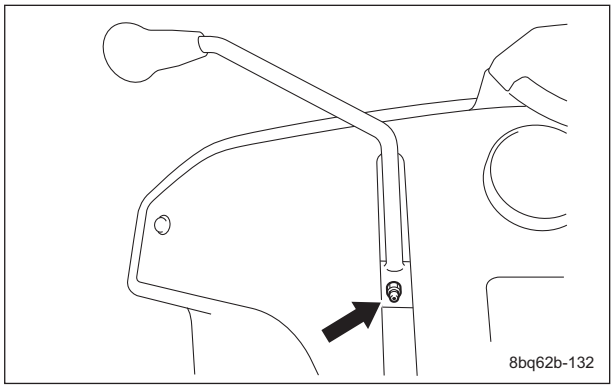

Greasing Points_005

3. Brake pedal shaft fulcrum

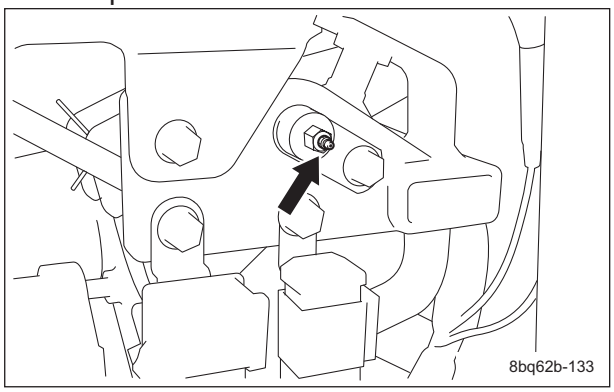

Greasing Points_006

4. Chain wheel mounting shaft fulcrum
   One greasing point is provided to each of the right and left chain wheel mounting shaft fulcrums.

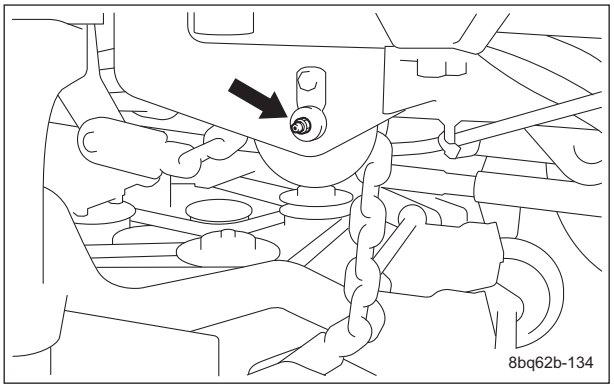

Greasing Points_007

5. Traveling pedal shaft fulcrum

Forward pedal

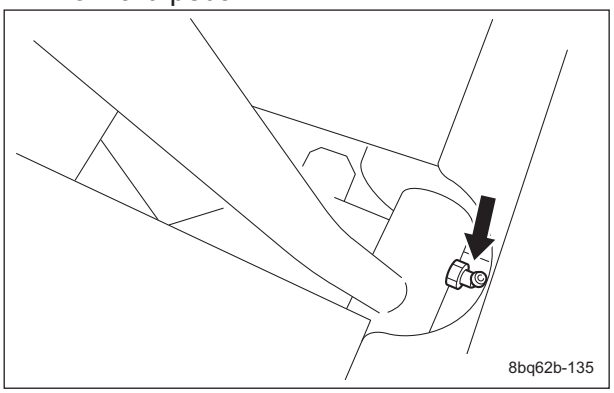

Greasing Points_008

Reverse pedal

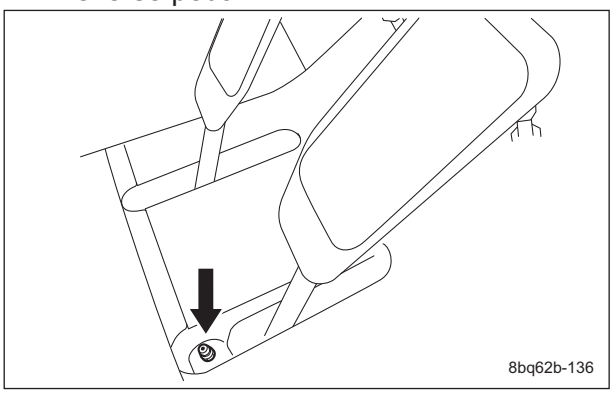

Greasing Points_009

https://truckmanualshub.com/

6. Brake lever shaft
   One greasing point is provided to each of the right and left brake lever shafts.

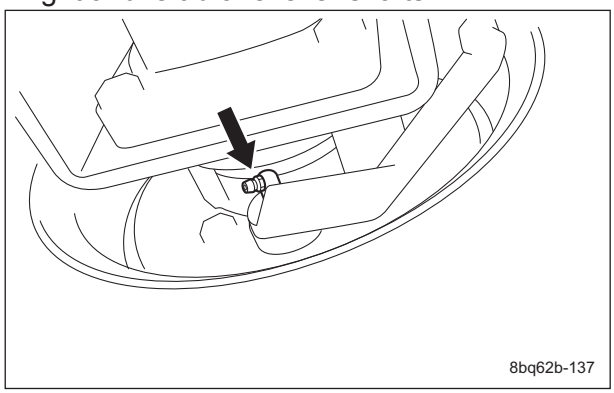

Greasing Points_010

7. Joint fulcrum
   One greasing point is provided to each of the two fulcrums of the joint.

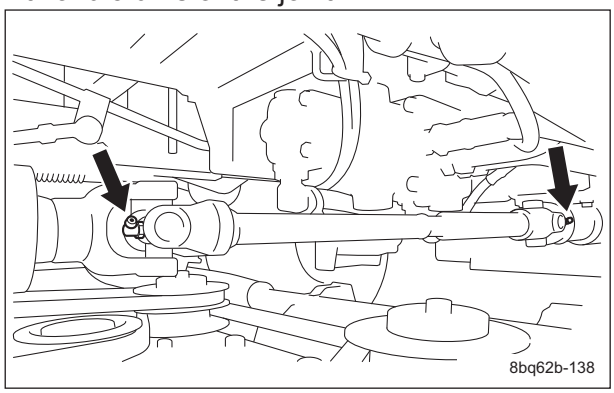

Greasing Points_011

8. Joint connector

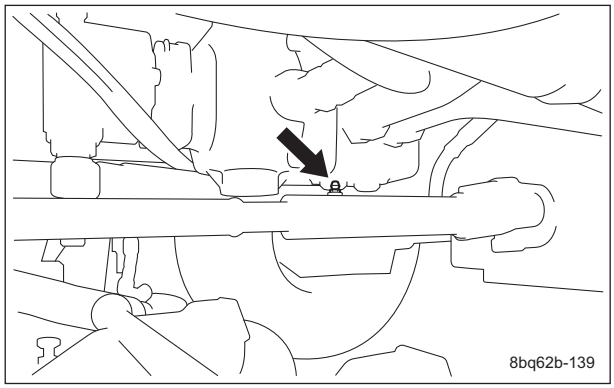

Greasing Points_012

9. Tension shaft fulcrum

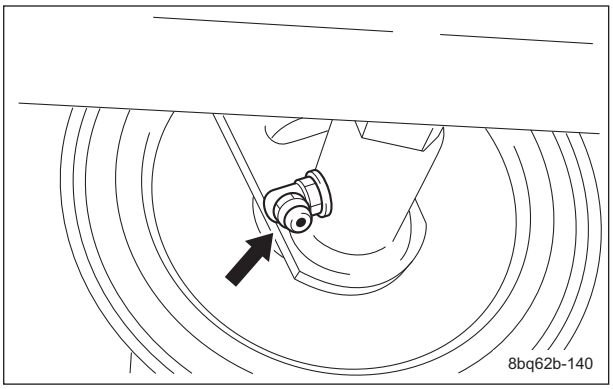

Greasing Points_013

10. Cam lever shaft fulcrum

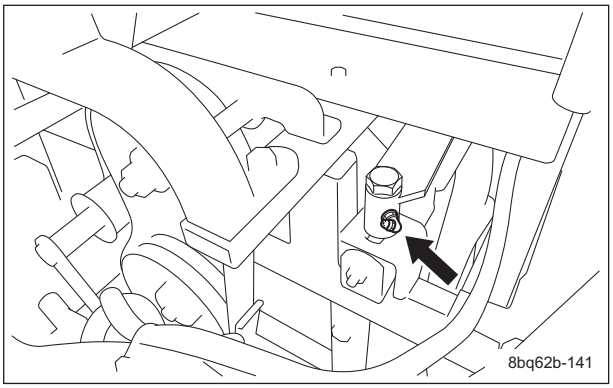

Greasing Points_014

11. Seat mounting bracket

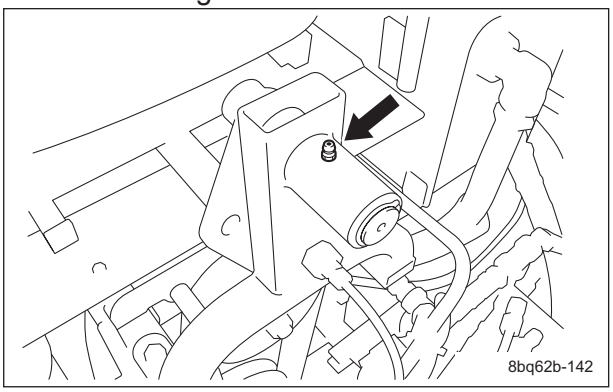

Greasing Points_015

https://truckmanualshub.com/

Maintenance (Main Body)

Removing/Installing Tires

Front Tires

Follow the steps below to remove the front tires:

1. Loosen the bolts.

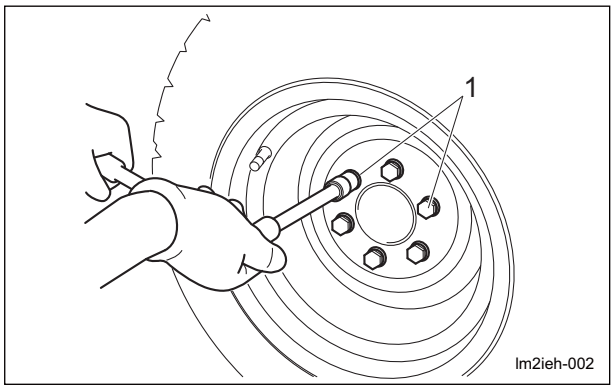

Front Tires_001

1	Heat-treated bolt

2. Securely place the jack beneath the jack-up point of the front left/right frame area, and then raise it until the tire lifts off the ground. (See "Jack-up Points" (Page 5-6) .)
3. Remove the bolts.
4. Remove the tire from the wheel mounting seat.

Caution

Refer to the Tightening Torque table.
Note that the Baroness product warranty may not apply to defects caused by incorrect or overtorque tightening etc.

Important

Tighten the bolts in the tightening order (diagonally).

For installing the front tires, reverse the removing procedure.

Rear Tire

Follow the steps below to remove the rear tires:

1. Loosen the bolts.

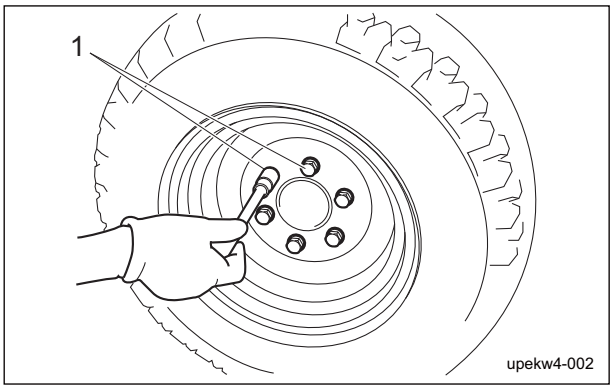

Rear Tires_001

1	Heat-treated bolt

2. Securely place the jack beneath the jack-up point of the rear frame area, and then raise it until the tire lifts off the ground. (See "Jack-up Points" (Page 5-6) .)
3. Remove the bolts.
4. Remove the tire from the wheel mounting seat.

Caution

Refer to the Tightening Torque table.
Note that the Baroness product warranty may not apply to defects caused by incorrect or overtorque tightening, etc.

Important

Tighten the bolts in the tightening order (diagonally).

For installing the rear tires, reverse the removing procedure.

https://truckmanualshub.com/

Adjustment of Belt Tension

Caution

Be sure to stop the engine before adjusting the belts.

Important

Make sure that the belt has the specified amount of tension.

If the belt becomes slack due to frequent use, it may jump or slip.
In addition, if it is overtightened, it may wear prematurely.
If necessary, adjust it, and always check the belt for appropriate tension.

Fan Belt

Caution

Be sure to stop the engine before adjusting the belts.

For details on handling the engine, please refer to the separate Engine Operating Manual.

1. Press the middle of the belt with your finger to check the belt tension.
2. If the belt is too slack, loosen bolts A and B (that affix the alternator), then move the alternator to adjust the tension.

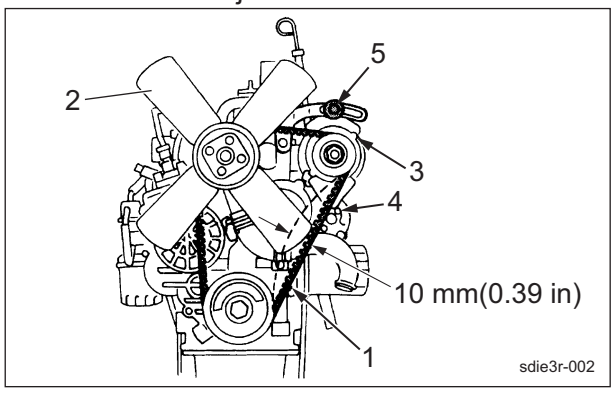

Fan Belt_001

1	Fan belt
2	Blade
3	Alternator
4	Bolt A
5	Bolt B

Knife Tension Belt

Caution

Be sure to stop the engine before adjusting the belts.

1. Remove the rear cover.
2. Set the knife rotation lever to the "ON" and "OFF" positions, and check the following points.
   - The tension lever operates correctly.
   - The spring stretches appropriately.

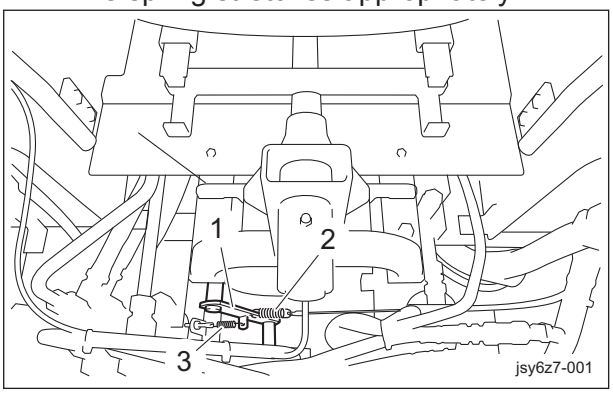

Knife Tension Belt_001

1	Tension lever
2	Tension spring
3	Tension return spring

3. Set the knife rotation lever to the "ON" position, and then press the middle of the belt with your finger to check the belt tension.

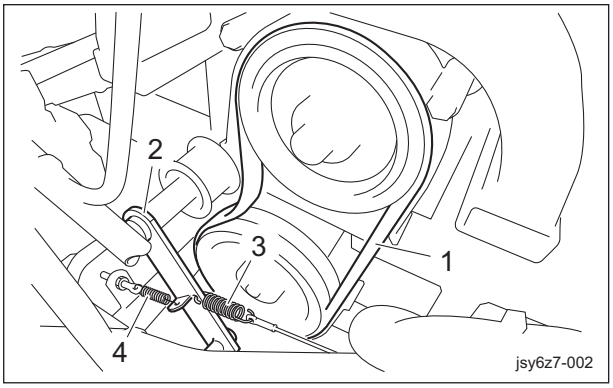

Knife Tension Belt_002

1	Knife tension belt
2	Tension lever
3	Tension spring
4	Tension return spring

https://truckmanualshub.com/

4. If the belt is too slack, adjust it by tightening the tension wire adjustment bolt.
   Adjust it so that the springs are adjusted as follows.
   - Tension spring
     Set the knife rotation lever to the "ON" position, and then adjust so that the total length of the tension spring is 40.0 mm.

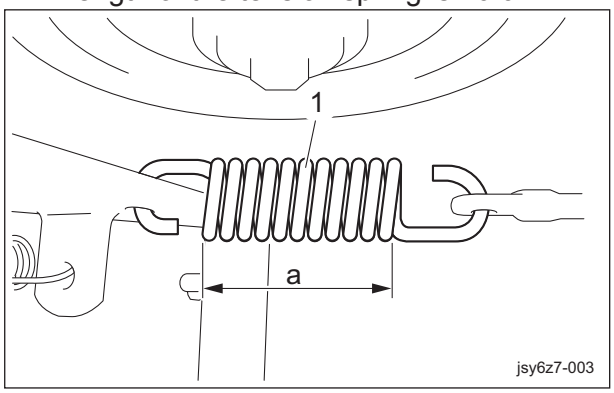

Knife Tension Belt_003

1	Tension spring
a	40.0 mm

   - Tension return spring

Important

Make sure that the shoe of the knife brake is not worn.
If the brake shoe is worn, replace it.

Important

After adjusting the knife brake, adjust the tension return spring.

Set the knife rotation lever to the "OFF" position, and then adjust so that the total length of the tension return spring is 50.0 mm.

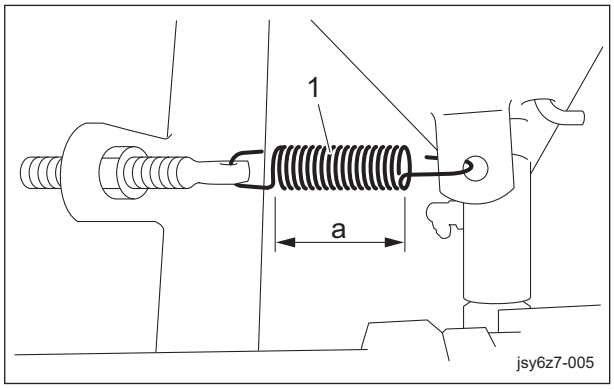

Knife Tension Belt_004

1	Tension return spring
a	50.0 mm

Adjustment of Brake

Danger

If the brake wire is cut, the machine will be unable to stop. This would be extremely dangerous.
If the brake wire is cracked or damaged, replace it with a new one immediately.
If the brake is not sufficiently effective, adjust the brake wire.

Important

Adjust to reduce the play in the brake lever as much as possible so that the brake does not drag when the lever is released.

1. Adjust the foot brake by tightening the brake wire adjustment bolt.
   - If there is too much play in the brake lever, the braking power is reduced and the brake pedal feel is light.
   - If there is too little play in the brake lever, the braking power is increased and the brake pedal feel is heavy.

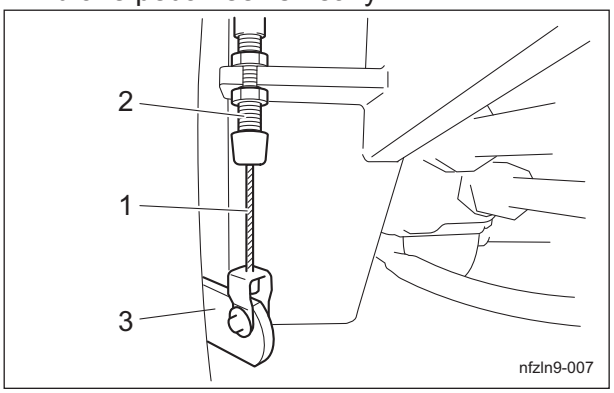

Adjustment of Brake_001

1	Brake wire
2	Adjustment bolt
3	Brake lever

2. Start the engine and drive to check the following.
   - Make sure that heat is not generated in the brake area.
   - Make sure that the left and right brakes are equally effective.

https://truckmanualshub.com/

Danger

It would be extremely dangerous and may result in an unexpected accident if the left and right brakes are not equally effective.

3. If the left and right brakes are not equally effective, make fine adjustments with the adjustment bolt on the brake wire.

Break-in of Brakes

If the brake shoes or brake pads are worn, replace them with new ones.
Immediately after replacement, drive to break in the brakes if the effectiveness of the brakes is low.
While driving, lightly operate the brakes to break in the contact areas.

Adjustment of Knife Brake

1. Remove the rear cover.
2. Make sure that the knife rotation lever is set to the "OFF" position.

Important

Make sure that the shoe of the knife brake is not worn.
If the brake shoe is worn, replace it.

Important

After adjusting the knife tension spring, adjust the knife brake.

3. Loosen the bolts mounting the brake shoe.

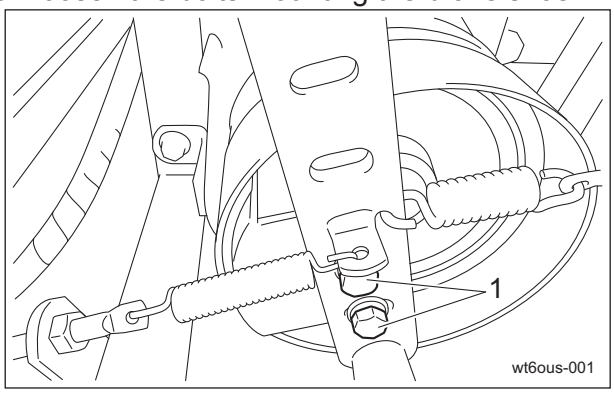

Adjustment of Knife Brake_001

1	Bolt

4. Move the brake shoe flush against the inside of the pulley drum.
   Note:
   Adjust the brake shoe so that knife rotation is fully stopped.

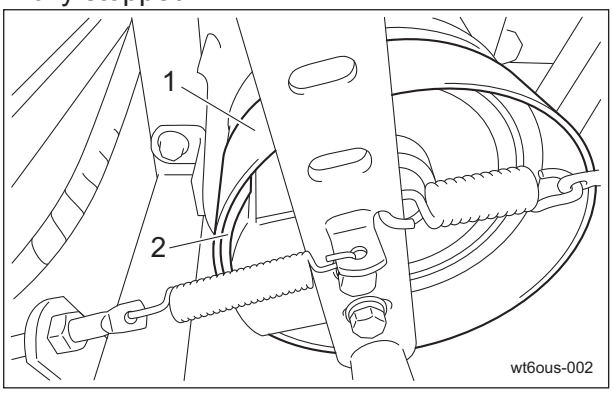

Adjustment of Knife Brake_002

1	Pulley drum
2	Brake shoe

5. Tighten the bolt mounting the brake shoe.
6. Adjust the knife tension return spring.

Adjusting the Neutral Position of the Piston Pump

Caution

Make sure not to touch rotating tires.

If the machine moves forward or backward while the traveling pedals are released, they are not set to the neutral position.
Follow the steps below to make adjustments.

1. Stop the engine.
2. Place the jacks beneath the jack-up points, and then lift the machine off the ground.
   Use stable jack stands, and raise the machine until the tires lift off the ground.(See "Jack-up Points" (Page 5-6) .)
3. Remove the seatback cover on the right side.
4. Remove the underseat cover on the right side.
5. Start the engine, and rev it up to the maximum rpm.
6. Set the 2WD/4WD selector switch to the "4WD" position.

https://truckmanualshub.com/

7. Adjust the neutral position for the rear wheels.
   [1] If the rear tires rotate forward, loosen the cam lever shaft, and then adjust lock nuts A to move the shaft seat backward. Find the position where the rear wheels stop, and then tighten the cam lever shaft to secure it.
   [2] If the rear tires rotate in reverse, loosen the cam lever shaft, and then adjust lock nuts A to move the shaft seat forward. Find the position where the rear wheels stop, and then tighten the cam lever shaft to secure it.

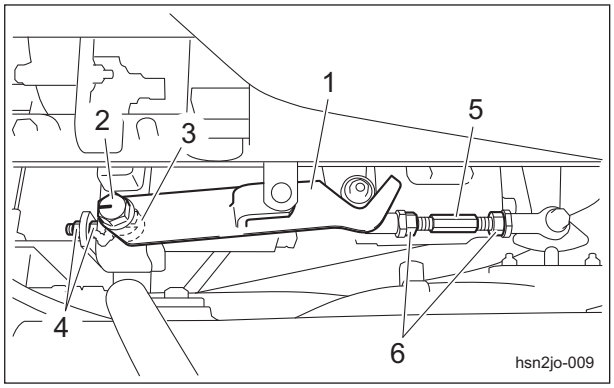

Adjusting the Neutral Position of the Piston Pump_001

1	Cam lever
2	Cam lever shaft
3	Shaft seat
4	Lock nut A
5	Threaded rod
6	Lock nut B

Important

Before adjusting the neutral position for the front wheels, make sure that the rear wheels have first been set to the neutral position.

8. Adjust the neutral position for the front wheels.
   [1] If the front tires rotate forward, loosen lock nuts B of the threaded rod, then turn the threaded rod to shorten the connection. Find the position where the front wheels stop, and then tighten lock nuts B.
   [2] If the front tires rotate in reverse, loosen lock nuts B of the threaded rod, then turn the threaded rod to extend the connection. Find the position where the front wheels stop, and then tighten lock nuts B.

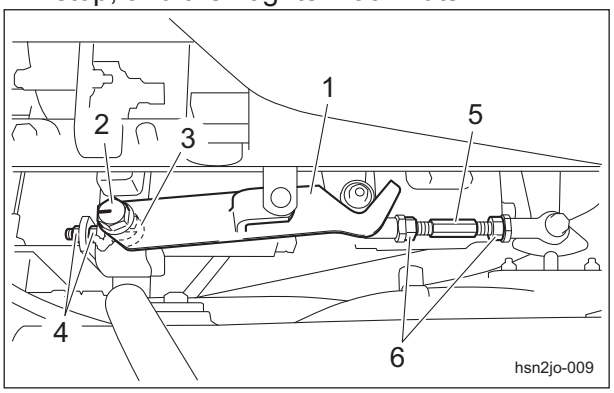

Adjusting the Neutral Position of the Piston Pump_002

1	Cam lever
2	Cam lever shaft
3	Shaft seat
4	Lock nut A
5	Threaded rod
6	Lock nut B

Change of Hydraulic Oil Filter

Important

Before changing the hydraulic oil filter, be sure to drain the hydraulic oil into a container.

1. Remove the filter guard mounting bolt, and then remove the filter guard.

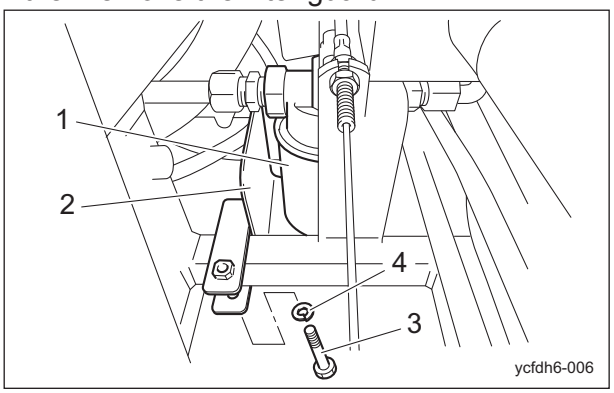

Change of Hydraulic Oil Filter_001

1	Hydraulic oil filter
2	Filter guard
3	Bolt
4	Spring washer

2. Replace the hydraulic oil filter.

https://truckmanualshub.com/

Change of Transmission Oil

Warning

When you change the transmission oil, be sure to drain it into a bowl and discard it in accordance with regional laws and regulations.

Caution

Be careful with hot oil, which could cause burns if it contacts your skin.

Important

Be sure to pour automobile gear oil that is classified as SAE Viscosity Grade #90 into the transmission.

1. Change the entire transmission oil after 50 hours of operation for the first time, and then change it every year.
   Transmission oil quantity is 0.45 dm^3(0.45 L).

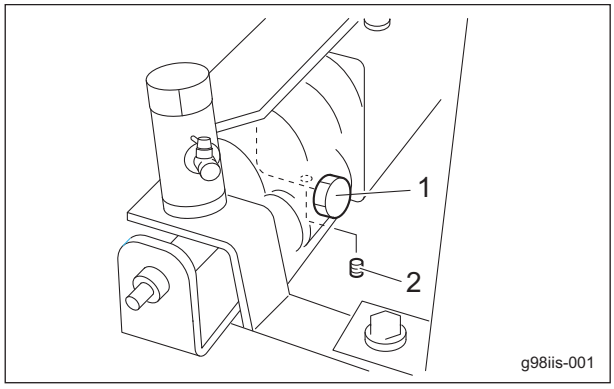

Change of Transmission Oil_001

1	Oil filling port
2	Drain plug

2. Make sure that oil does not bleed from mating areas of the gear box.
3. Check underneath the machine for oil leakage.

https://truckmanualshub.com/

Change of Fuse

Fuse Box

Warning

Before performing maintenance on the electrical system, be sure to disconnect the negative terminal of the battery.

Caution

If a fuse is blown, the electrical circuit may be shorted.
Check to identify the cause, such as a bad terminal connection, damaged wiring or terminals, or incorrect wiring.

The fuse box includes spare fuses and tools.

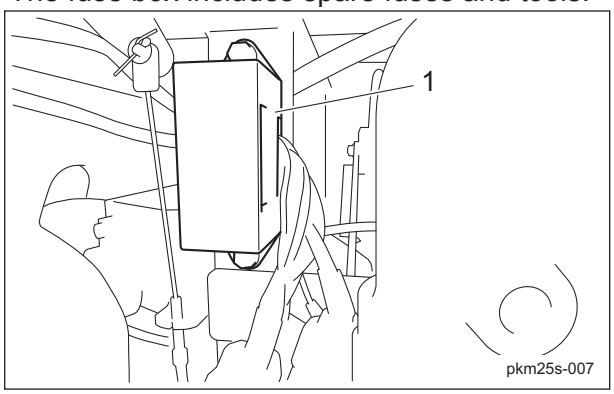

Fuse Box_001

1	Fuse box

The machine uses a mini fuse for automobiles.
Replace an old fuse with a new fuse of the specified capacity.

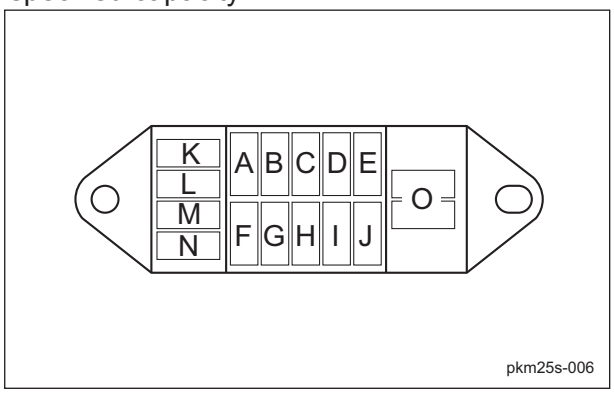

Fuse Box_002

A	5A	Timer (glow signal)
B	5A	Glow lamp
C	5A	Fuel pump
D	5A	Water temperature gauge, charge lamp, oil pressure (engine oil pressure) lamp, water temperature buzzer
E	15A	Electromagnetic valve
F	-	-
G	5A	Timer (start signal)
H	5A	Alternator
I	5A	Fuel SOL relay
J	5A	Starter relay, Delay timer, Sitting detection relay, Neutral detection relay
K	5A	Spare
L	5A	
M	15A	
N	15A	
O	Tool	

Fusible Link

Fuse capacity of the fusible link is described below.

- Engine stop solenoid: 30 A
- Battery: 50 A

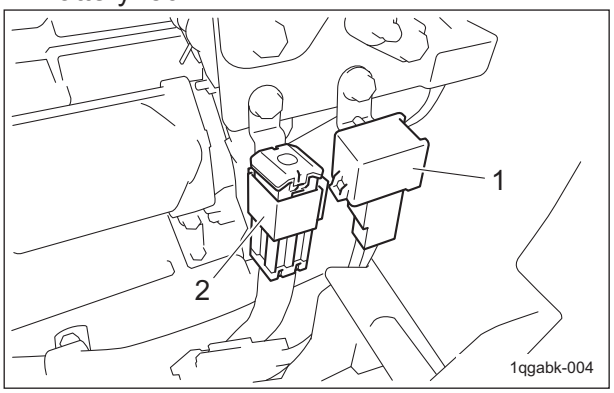

Fusible Link_001

1	Fusible link (engine stop solenoid)
2	Fusible link (battery)

Long-Term Storage

Before Long-Term Storage

- Remove dirt, grass clippings, debris, oil stains etc. completely.
- Supply oil and apply grease to appropriate parts.
- Remove the battery.

https://truckmanualshub.com/

https://truckmanualshub.com/

BARONESS
Quality on Demand

EU Declaration of Conformity

Product Identification

Product :	Lawnmower	
Make :	BARONESS	
Type :	GM1700	
Version(s) :	Not Applicable	
Starting Serial No. :	**20328**	
Measured Sound Power Level :	LWA 103.74	dB
Guaranteed Sound Power Level :	LWA 105	dB
Manufacturer Name :	Kyoeisha Co., Ltd.	
Address :	1-26 Miyuki-cho, Toyokawa, Aichi-pref.,Japan	

Conforms to the following Directives

2006/42/EC	Machinery (MD)
2014/30/EU	Electromagnetic compatability (EMC)
2000/14/EC	Noise emissions from outdoor equipment

We has been designed and manufactured using the following specifications

ISO 12100 : 2010 (2006/42/EC)
ISO 5395-1 : 2013 (2006/42/EC)
ISO 5395-3 : 2013 (2006/42/EC)
ISO 14982 :1998 (2014/30/EU)

Technical Documentation

Keeper's Name :	Kyoeisha Co., Ltd.
Keeper's Address :	1-26 Miyuki-cho, Toyokawa, Aichi-pref.,Japan

Compiler of the technical file (2006/42/EC)

Name:	Kyoeisha U.K.Ltd.
Address:	Unit 5 Hatch Industrial Park Grewell Road,Basingstke Hampshire RG24 7NG, the United Kingdom

Conformity assessment procedures

Internal production control : Module A (2006/42/EC)
EC-type examination : Module B (2014/30/EU)
Internal control of production with assessment of technical documentation and periodical checking (2000/14/EC)

Involved Notified Body (2000/14/EC)

Name :	SNCH
Address :	11, Route de Sandweiler 5230 Sandweiler Luxembourg
Certificate / Report No. :	SNCH*2000/14*2005/88*2401*01/TCGM1700-01

Place : Japan
Date : 10 February 2016 (10 / 02 / 2016)

Signature : Kimiya Kaneko
Name : Kimiya Kaneko
Position : Quality Dept. Manager

(fr)

Déclaration de conformité UE

Identification du produit

Produit :	Tondeuse à gazon	
Fabriquant :	BARONESS	
Type :	GM1700	
Version(s) :	Non applicable	
Numéro de série de début :	**20328**	
Niveau de puissance acoustique mesuré :	LwA 103.74	dB
Niveau de puissance acoustique garanti :	LwA 105	dB
Fabricant Nom :	Kyoeisha Co., Ltd.	
Adresse :	1-26, Miyuki-cho, Toyokawa, préfecture d'Aichi, Japon	

Conforme aux directives suivantes :

2006/42/CE	Machine (MD)
2014/30/UE	Compatibilité électromagnétique (CEM)
2000/14/CE	Émissions sonores de l'équipement de plein air

Conception et fabrication en respect des spécifications suivantes :

ISO 12100 : 2010 (2006/42/CE)
ISO 5395-1 : 2013 (2006/42/CE)
ISO 5395-3 : 2013 (2006/42/CE)
ISO 14982 :1998 (2014/30/UE)

Fiche technique

Marque :	Kyoeisha Co., Ltd.
Adresse de la marque :	1-26, Miyuki-cho, Toyokawa, préfecture d'Aichi, Japon

Compilateur de la fiche technique (2006/42/CE)

Nom :	Kyoeisha U.K. Ltd.
Adresse :	Unit 5 Hatch Industrial Park Greywell Road, Basingstoke Hampshire RG24 7NG, Royaume-Uni

Procédures d'évaluation de la conformité

Contrôle de production interne : module A (2006/42/CE)
Examen de type CE : module B (2014/30/UE)
Contrôle interne de la production avec évaluation de la fiche technique et vérification périodique (2000/14/CE)

Organisme notifié impliqué (2000/14/CE)

Nom :	SNCH
Adresse :	11, Route de Sandweiler 5230 Sandweiler, Luxembourg
N° de certificat/rapport :	SNCH*2000/14*2005/88*2401*01/TCGM1700-01

https://truckmanualshub.com/

(es)

Declaración de conformidad de la UE

Identificación del producto

Producto:		Cortacésped		
Marca:		BARONESS		
Tipo:		GM1700		
Versión:		No aplicable		
N.º de serie inicial:		**20328**		
Nivel de potencia sonora medido:		LWA	103.74	dB
Nivel de potencia sonora garantizado:		LWA	105	dB
Fabricante	Nombre:	Kyoeisha Co., Ltd.		
	Dirección:	1-26 Miyuki-cho, Toyokawa, Aichi-pref., Japón		

Cumple las siguientes Directivas

2006/42/CE	Maquinaria (MD)
2014/30/UE	Compatibilidad electromagnética (EMC)
2000/14/CE	Emisiones sonoras de máquinas de uso al aire libre

Se ha diseñado y fabricado utilizando las siguientes especificaciones

ISO 12100 : 2010 (2006/42/CE)
ISO 5395-1 : 2013 (2006/42/CE)
ISO 5395-3 : 2013 (2006/42/CE)
ISO 14982 :1998 (2014/30/UE)

Documentación técnica

Nombre del responsable:	Kyoeisha Co., Ltd.
Dirección del responsable:	1-26 Miyuki-cho, Toyokawa, Aichi-pref., Japón

Compilador del archivo técnico (2006/42/CE)

Nombre:	Kyoeisha U.K. Ltd.
Dirección:	Unit 5 Hatch Industrial Park Greywell Road, Basingstoke Hampshire RG24 7NG, Reino Unido

Procedimientos de evaluación de conformidad

Control de fabricación interno: Módulo A (2006/42/CE)
Examen de tipo CE: Módulo B (2014/30/UE)
Control interno de fabricación con evaluación de documentación técnica y comprobaciones periódicas (2000/14/CE)

Organismo notificado implicado (2000/14/CE)

Nombre:	SNCH
Dirección:	11, Route de Sandweiler 5230 Sandweiler Luxemburgo
Certificado/Informe n.º:	SNCH*2000/14*2005/88*2401*01/TCGM1700-01

(de)

EU-Konformitätserklärung

Produktbeschreibung

Produkt:		Rasenmäher		
Marke:		BARONESS		
Modell:		GM1700		
Version(en):		Nicht zutreffend		
Startseriennummer:		**20328**		
Gemessener Schallleistungspegel:		LWA	103.74	dB
Garantierter Schallleistungspegel:		LWA	105	dB
Hersteller	Name:	Kyoeisha Co., Ltd.		
	Adresse:	1-26 Miyuki-cho, Toyokawa, Aichi-pref.,Japan		

Entspricht den folgenden Richtlinien

2006/42/EG	Maschinenrichtlinie
2014/30/EU	Elektromagnetische Verträglichkeit (EMV)
2000/14/EG	Geräuschemission von im Freien betriebenen Geräten

Unter Anwendung der folgenden Bestimmungen entwickelt und hergestellt

ISO 12100 : 2010 (2006/42/EG)
ISO 5395-1 : 2013 (2006/42/EG)
ISO 5395-3 : 2013 (2006/42/EG)
ISO 14982 :1998 (2014/30/EU)

Technische Dokumentation

Name des Halters	Kyoeisha Co., Ltd.
Adresse des Halters	1-26 Miyuki-cho, Toyokawa, Aichi-pref.,Japan

Technische Unterlagen erstellt von (2006/42/EG)

Name:	Kyoeisha U.K.Ltd.
Adresse:	Unit 5 Hatch Industrial Park Grewell Road,Basingstoke Hampshire RG24 7NG, Großbritannien

Konformitätsbewertungsverfahren

Interne Produktionskontrolle : Modul A (2006/42/EG)
EG-Baumusterprüfung : Modul B (2014/30/EU)
Interne Produktionskontrolle mit Bewertung der technischen Unterlagen und regelmäßiger Überprüfung (2000/14/EG)

Beteiligte benannte Stelle (2000/14/EG)

Name:	SNCH
Adresse :	11, Route de Sandweiler 5230 Sandweiler Luxemburg
Bescheinigung/Bericht Nr. :	SNCH*2000/14*2005/88*2401*01/TCGM1700-01

https://truckmanualshub.com/

(sv)

EU-försäkran om överensstämmelse

Produktidentifikation

Produkt :		Gräsklippare
Märke:		BARONESS
Typ:		GM1700
Version(er):		Ej aktuellt
Serienummer startar på:		**20328**
Uppmätt ljudeffektnivå:		LWA 103.74 dB
Garanterad ljudeffektnivå:		LWA 105 dB
Tillverkare	Namn:	Kyoeisha Co., Ltd.
	Adress:	1-26 Miyuki-cho, Toyokawa, Aichi-pref., Japan

Uppfyller följande direktiv

2006/42/EG	Maskindirektivet
2014/30/EU	Elektromagnetisk kompatibilitet (EMC)
2000/14/EG	Bulleremission från utomhusutrustning

Följande kravspecifikationer har följts vid konstruktion och tillverkning

ISO 12100 :2010 (2006/42/EG)
ISO 5395-1 :2013 (2006/42/EG)
ISO 5395-3 :2013 (2006/42/EG)
ISO 14982 : 1998 (2014/30/EU)

Teknisk dokumentation

Innehavarens namn:	Kyoeisha Co., Ltd.
Innehavarens adress:	1-26 Miyuki-cho, Toyokawa, Aichi-pref., Japan

Den tekniska filen(2006/42/EG) har tagits fram av

Namn:	Kyoeisha U.K.Ltd.
Adress:	Unit 5 Hatch Industrial Park Grewell Road, Basingstoke Hampshire RG24 7NG, Storbritannien

Förfarande för bedömning av överensstämmelse

Intern produktionskontroll: Modul A (2006/42/EG)
EG-typprovning: Modul B (2014/30/EU)
Intern kontroll av produktion med fastställande av teknisk dokumentation och periodiska kontroller (2000/14/EG)

Anmält organ (2000/14/EG)

Namn:	SNCH
Adress:	11, Route de Sandweiler 5230 Sandweiler Luxembourg
Certifikatnummer/rapportnummer:	SNCH*2000/14*2005/88*2401*01/TCGM1700-01

https://truckmanualshub.com/

MEMO

https://truckmanualshub.com/

BARONESS®

Quality on Demand

KYOEISHA CO.,LTD.

Head Office 1-26, Miyuki-cho, Toyokawa, Aichi-Pref. 442-8530 Japan.
Tel :(0533) 84-1390
Fax:(0533) 89-3623

GM1700--UM--GBZ/16C-00-S.K
E01[GM1700_EU01]